THIS DRAWING IS UNPUBLISHED. RELEASED FOR PUBLICATION AUG ,2006.
© COPYRIGHT – BY TYCO ELECTRONICS CORPORATION. ALL RIGHTS RESERVED.

LOC	DIST
DW	—

REVISIONS

P	LTR	DESCRIPTION	DATE	DWN	APVD
	F6	REVISED (ECR-12-013183) TO IDENTIFY PCI-E SPEC GEN II & GEN III FOR EACH P/N	26JUL'12	E.L.	W.K.

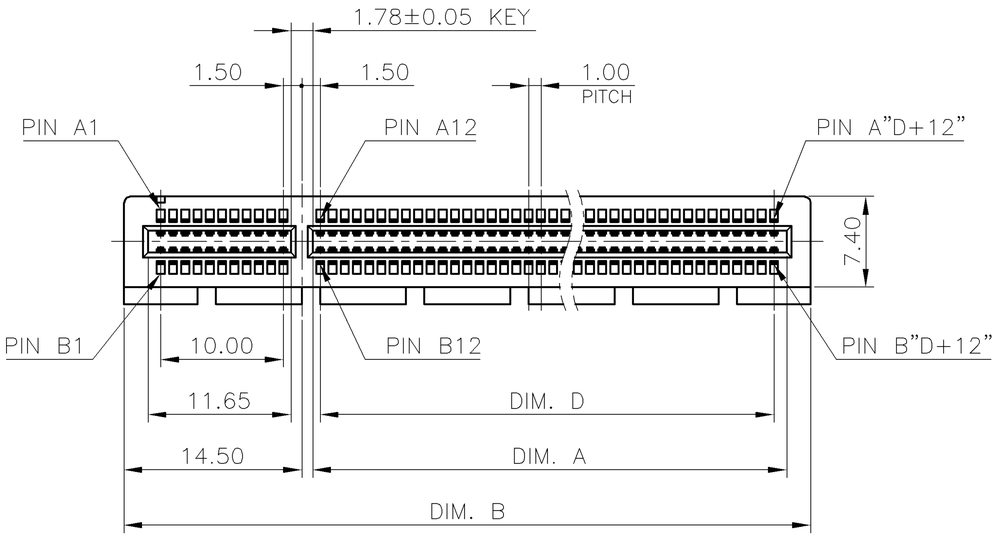

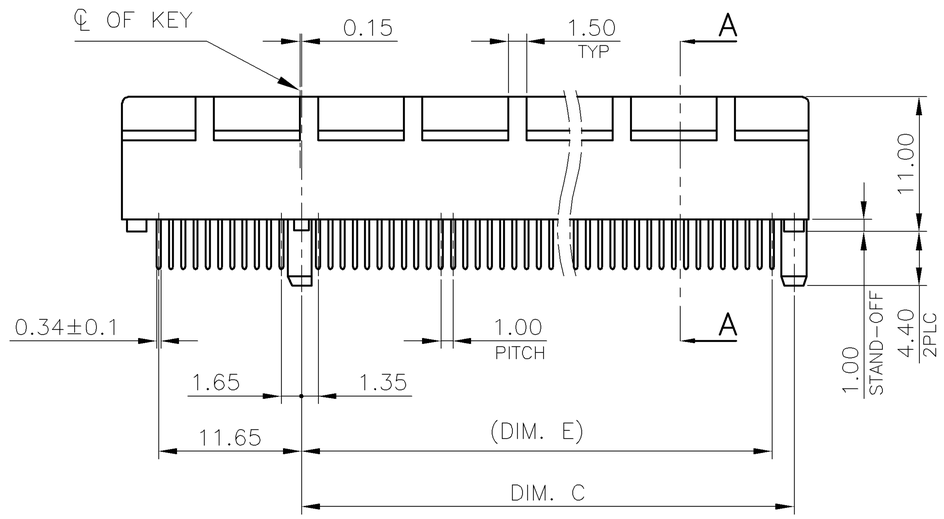

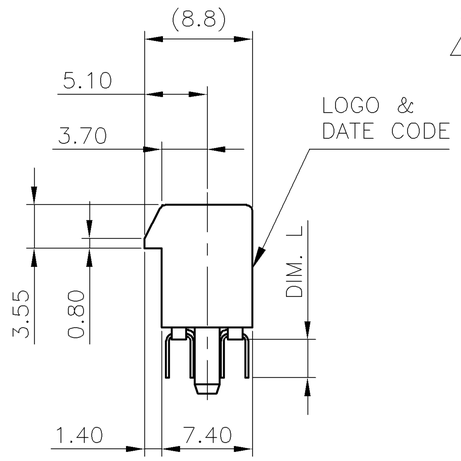

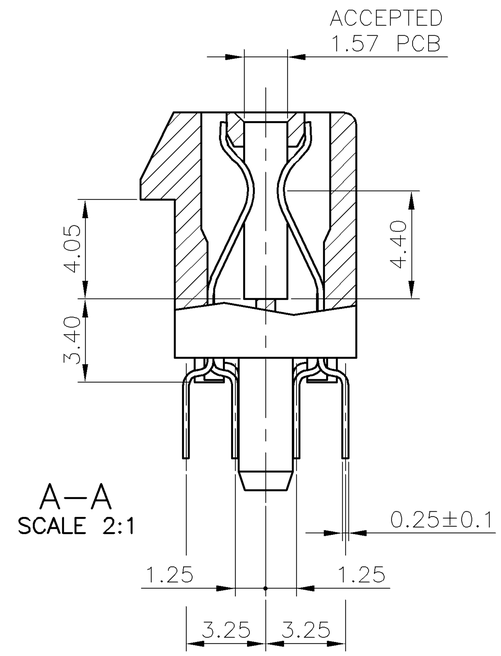

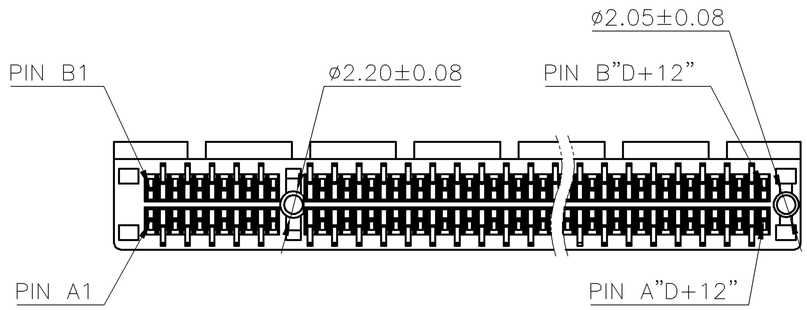

NOTES:

1. MATERIAL:
   1.1 HOUSING: 1.PA46 WITH 40% G.F, UL94 V-0, COLOR: SEE TABLE.
   2.PA9T WITH 30% GF, UL94 V-0, COLOR: SEE TABLE.
   1.2 CONTACT: PHOSPHOR BRONZE
2. FINISH:
   CONTACT: (SEE TABLE) GOLD PLATING ON CONTACT AREA.
   2.54um [100u"] MIN. MATTE-TIN PALTING ON SOLDER TAIL AREA.
   1.27um [50u"] MIN. NICKEL UNDERPLATING OVERALL.
3. CONNECTOR HAS MET THE REQUIREMENTS PER PCI EXPRESS GEN 2 TECHNICAL DOCUMENT.
4. WEIGHT:
   36 POS.: 2.55 GRAMS; 64 POS.: 3.90 GRAMS
   98 POS.: 5.50 GRAMS; 164 POS.: 8.80 GRAMS
5. WAVE SOLDER CAPABLE TO 265°C PER TEST SPEC. 109-202 CONDITION B.
6. REFLOW SOLDER CAPABLE TO 260°C PER TEST SPEC. 109-201 CONDITION B. (REFLOW SOLDERING PLEASE USE PN : 1734774-1 TO 4-1734774-8)

THIS DRAWING IS A CONTROLLED DOCUMENT.

DIMENSIONS: MM

TOLERANCES UNLESS OTHERWISE SPECIFIED:

0 PLC	± –
1 PLC	± 0.3
2 PLC	± 0.2
3 PLC	± 0.15
4 PLC	± –
ANGLES	± 3°

MATERIAL: SEE NOTE

FINISH: SEE NOTE

DWN	B. HSING	15JUL2009
CHK	S. CHIEN	15JUL2009
APVD	W. KODAMA	15JUL2009

PRODUCT SPEC: 108-57871

APPLICATION SPEC: —

WEIGHT: SEE NOTE 4

CUSTOMER DRAWING

TE Connectivity

NAME: PCI EXPRESS CARD EDGE CONNECTOR VERTICAL, DIP TYPE, 3GIO

SIZE	CAGE CODE	DRAWING NO	RESTRICTED TO
A3	00779	C-1734774	—

SCALE: — SHEET 1 OF 4 REV F6

THIS DRAWING IS UNPUBLISHED. RELEASED FOR PUBLICATION AUG ,2006.
© COPYRIGHT – BY TYCO ELECTRONICS CORPORATION. ALL RIGHTS RESERVED.

LOC	DIST
DW	–

REVISIONS

P	LTR	DESCRIPTION	DATE	DWN	APVD
		SEE SHEET 1.			

WEIGHT(g)	PCI–E COMPLIANCE	HOUSING MATERIAL	DIM. L	DIM. E	DIM. D	DIM. C	DIM. B	DIM. A	POS.	HOUSING COLOR	MIN. GOLD THICKNESS	PART NUMBER
8.7	GEN II & GEN III	6 PA9T	2.30	71.35	70	73.15	89	71.65	164	BLACK	30u"	4–1734774–8
										WHITE		4–1734774–7
5.45				38.35	37	40.15	56	38.65	98	BLACK		4–1734774–6
										WHITE		4–1734774–5
3.85				21.35	20	23.15	39	21.65	64	BLACK		4–1734774–4
										WHITE		4–1734774–3
2.55				7.35	6	9.15	25	7.65	36	BLACK		4–1734774–2
										WHITE		4–1734774–1
8.7				71.35	70	73.15	89	71.65	164	BLACK	15u"	4–1734774–0
											G/F	3–1734774–9
										WHITE	15u"	3–1734774–8
											G/F	3–1734774–7
5.45				38.35	37	40.15	56	38.65	98	BLACK	15u"	3–1734774–6
											G/F	3–1734774–5
										WHITE	15u"	3–1734774–4
											G/F	3–1734774–3
3.85				21.35	20	23.15	39	21.65	64	BLACK	15u"	3–1734774–2
											G/F	3–1734774–1
										WHITE	15u"	3–1734774–0
											G/F	2–1734774–9
2.55				7.35	6	9.15	25	7.65	36	BLACK	15u"	2–1734774–8
											G/F	2–1734774–7
										WHITE	15u"	2–1734774–6
											G/F	2–1734774–5
8.7			3.10	71.35	70	73.15	89	71.65	164	BLACK	30u"	2–1734774–4
										WHITE		2–1734774–3
5.45				38.35	37	40.15	56	38.65	98	BLACK		2–1734774–2
										WHITE		2–1734774–1
3.85				21.35	20	23.15	39	21.65	64	BLACK		2–1734774–0
										WHITE		1–1734774–9
2.55				7.35	6	9.15	25	7.65	36	BLACK		1–1734774–8
										WHITE		1–1734774–7
8.7				71.35	70	73.15	89	71.65	164	BLACK	15u"	1–1734774–6
											G/F	1–1734774–5
										WHITE	15u"	1–1734774–4
											G/F	1–1734774–3
5.45				38.35	37	40.15	56	38.65	98	BLACK	15u"	1–1734774–2
											G/F	1–1734774–1
										WHITE	15u"	1–1734774–0
											G/F	1734774–9
3.85				21.35	20	23.15	39	21.65	64	BLACK	15u"	1734774–8
											G/F	1734774–7
										WHITE	15u"	1734774–6
											G/F	1734774–5
2.55				7.35	6	9.15	25	7.65	36	BLACK	15u"	1734774–4
											G/F	1734774–3
										WHITE	15u"	1734774–2
											G/F	1734774–1

WEIGHT(g)	PCI–E COMPLIANCE	HOUSING MATERIAL	DIM. L	DIM. E	DIM. D	DIM. C	DIM. B	DIM. A	POS.	HOUSING COLOR	MIN. GOLD THICKNESS	PART NUMBER
8.8	GEN II	PA46	2.30	71.35	70	73.15	89	71.65	164	BLACK	30u"	9–1734774–7
										WHITE		9–1734774–6
5.5				38.35	37	40.15	56	38.65	98	BLACK		9–1734774–5
										WHITE		9–1734774–4
3.9				21.35	20	23.15	39	21.65	64	BLACK		9–1734774–3
										WHITE		9–1734774–2
2.55				7.35	6	9.15	25	7.65	36	BLACK		9–1734774–1
										WHITE		9–1734774–0
8.8				71.35	70	73.15	89	71.65	164	BLACK	15u"	8–1734774–9
											G/F	8–1734774–8
										WHITE	15u"	8–1734774–7
											G/F	8–1734774–6
5.5				38.35	37	40.15	56	38.65	98	BLACK	15u"	8–1734774–5
											G/F	8–1734774–4
										WHITE	15u"	8–1734774–3
											G/F	8–1734774–2
3.9				21.35	20	23.15	39	21.65	64	BLACK	15u"	8–1734774–1
											G/F	8–1734774–0
										WHITE	15u"	7–1734774–9
											G/F	7–1734774–8
2.55				7.35	6	9.15	25	7.65	36	BLACK	15u"	7–1734774–7
											G/F	7–1734774–6
										WHITE	15u"	7–1734774–5
											G/F	7–1734774–4
8.8			3.10	71.35	70	73.15	89	71.65	164	BLACK	30u"	7–1734774–3
										WHITE		7–1734774–2
5.5				38.35	37	40.15	56	38.65	98	BLACK		7–1734774–1
										WHITE		7–1734774–0
3.9				21.35	20	23.15	39	21.65	64	BLACK		6–1734774–9
										WHITE		6–1734774–8
2.55				7.35	6	9.15	25	7.65	36	BLACK		6–1734774–7
										WHITE		6–1734774–6
8.8				71.35	70	73.15	89	71.65	164	BLACK	15u"	6–1734774–5
											G/F	6–1734774–4
										WHITE	15u"	6–1734774–3
											G/F	6–1734774–2
5.5				38.35	37	40.15	56	38.65	98	BLACK	15u"	6–1734774–1
											G/F	6–1734774–0
										WHITE	15u"	5–1734774–9
											G/F	5–1734774–8
3.9				21.35	20	23.15	39	21.65	64	BLACK	15u"	5–1734774–7
											G/F	5–1734774–6
										WHITE	15u"	5–1734774–5
											G/F	5–1734774–4
2.55				7.35	6	9.15	25	7.65	36	BLACK	15u"	5–1734774–3
											G/F	5–1734774–2
										WHITE	15u"	5–1734774–1
											G/F	5–1734774–0

THIS DRAWING IS A CONTROLLED DOCUMENT.

DIMENSIONS: MM

TOLERANCES UNLESS OTHERWISE SPECIFIED:

0 PLC	± –
1 PLC	± 0.3
2 PLC	± 0.2
3 PLC	± 0.15
4 PLC	± –
ANGLES	± 3°

MATERIAL –

FINISH –

DWN –
CHK –
APVD –
PRODUCT SPEC –
APPLICATION SPEC –
WEIGHT –

TE Connectivity

NAME

PCI EXPRESS CARD EDGE CONNECTOR
VERTICAL, DIP TYPE, 3GIO

SIZE	CAGE CODE	DRAWING NO	RESTRICTED TO
A3	00779	C–1734774	–

CUSTOMER DRAWING | SCALE – | SHEET 2 OF 4 | REV F6

THIS DRAWING IS UNPUBLISHED. RELEASED FOR PUBLICATION AUG ,2006.
© COPYRIGHT – BY TYCO ELECTRONICS CORPORATION. ALL RIGHTS RESERVED.

LOC	DIST
DW	—

REVISIONS

P	LTR	DESCRIPTION	DATE	DWN	APVD
		SEE SHEET 1.			

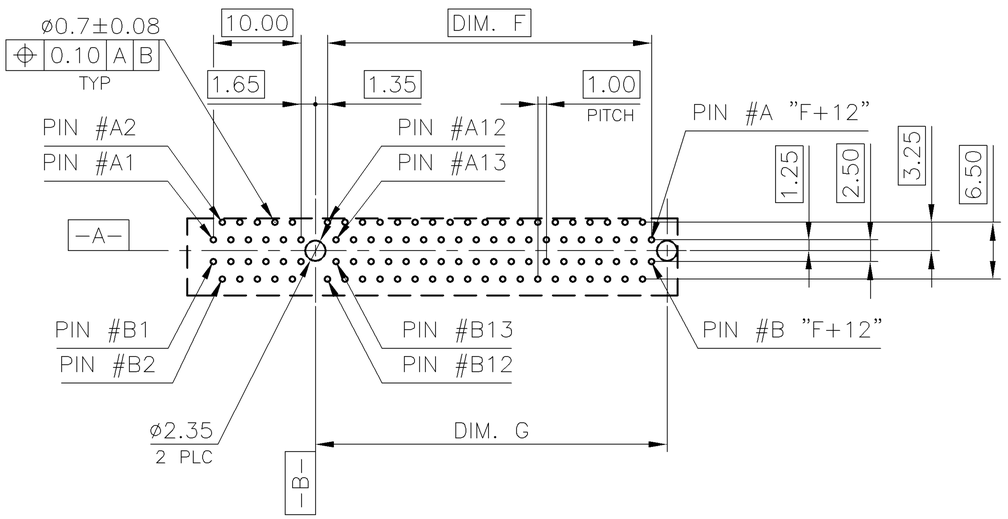

RECOMMENDED PCB LAYOUT

TOLERANCE: ±0.05
FOR DIM.L=3.1mm PCB THICKNESS: 2.4mm
FOR DIM.L=2.3mm PCB THICKNESS: 1.6mm

ADD–IN CARD EDGE–FINGER DIMENSIONS

NOTES:
CHAMFER EDGE MUST BE FREE OF CUTTING BURRS

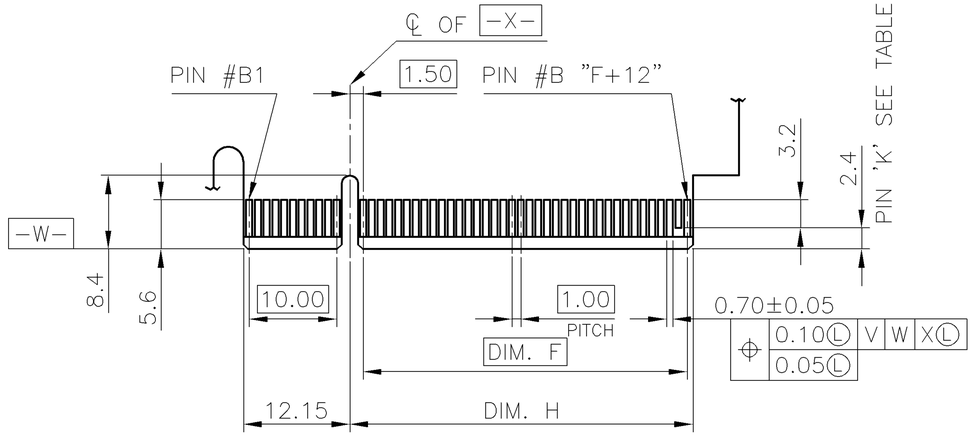

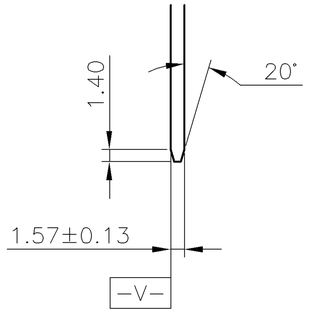

← I/O PANEL DIRECTION
PRIMARY (COMPONENT) SIDE

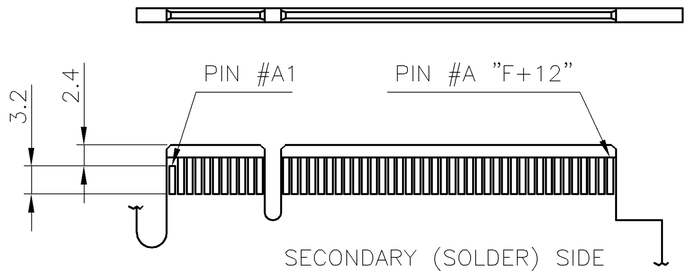

POS.	DIM. F	DIM. G	DIM. H	"K"
164	70.0	73.15	72.15	B17, B31, B48, B81
98	37.0	40.15	39.15	B17, B31, B48
64	20.0	23.15	22.15	B17, B31
36	6.0	9.15	8.15	B17

THIS DRAWING IS A CONTROLLED DOCUMENT.

DIMENSIONS: MM

TOLERANCES UNLESS OTHERWISE SPECIFIED:
0 PLC ± –
1 PLC ± –
2 PLC ± –
3 PLC ± –
4 PLC ± –
ANGLES ± –

MATERIAL –
FINISH –

DWN –
CHK –
APVD –
PRODUCT SPEC —
APPLICATION SPEC —
WEIGHT —

TE Connectivity

NAME
PCI EXPRESS CARD EDGE CONNECTOR
VERTICAL, DIP TYPE, 3GIO

SIZE	CAGE CODE	DRAWING NO	RESTRICTED TO
A3	00779	C–1734774	—

CUSTOMER DRAWING | SCALE — | SHEET 3 OF 4 | REV F6

THIS DRAWING IS UNPUBLISHED. RELEASED FOR PUBLICATION AUG ,2006.
© COPYRIGHT – BY TYCO ELECTRONICS CORPORATION. ALL RIGHTS RESERVED.

LOC	DIST
DW	—

REVISIONS

P	LTR	DESCRIPTION	DATE	DWN	APVD
		SEE SHEET 1.			

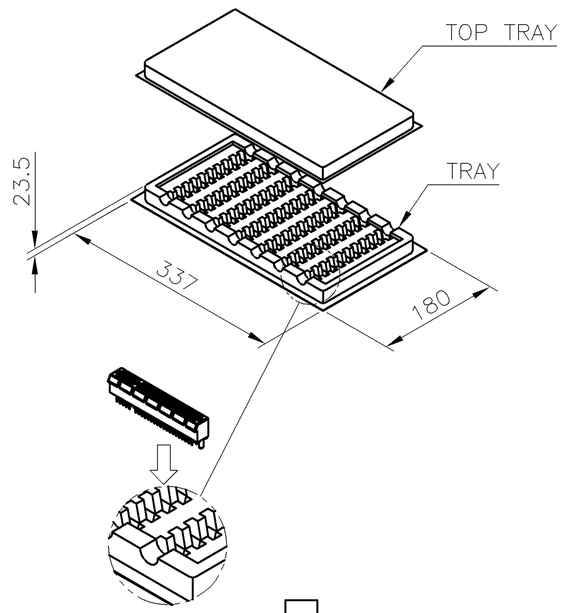

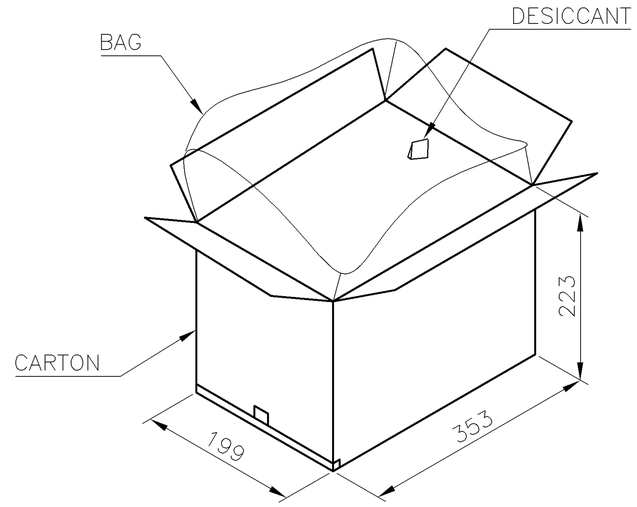

NOTES :
1. MATERIAL :
   TRAY : PVC, COLOR: TRANSPARENT.
   CARTON: CORRUGATED FIBER
   BOX: CORRUGATED FIBER
2. DIMENSION :
   TRAY: SEE DRAWING
   CARTON: SEE DRAWING
   BOX : SEE DRAWING
3. QUANTITY : SEE TABLE
4. WEIGHT : SEE TABLE

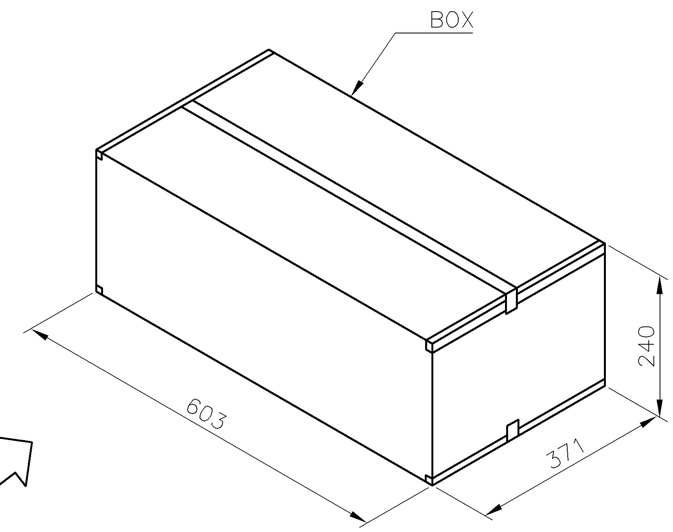

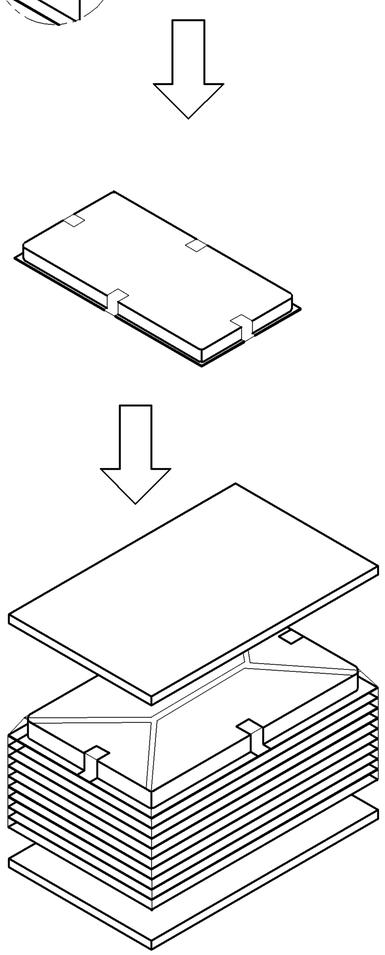

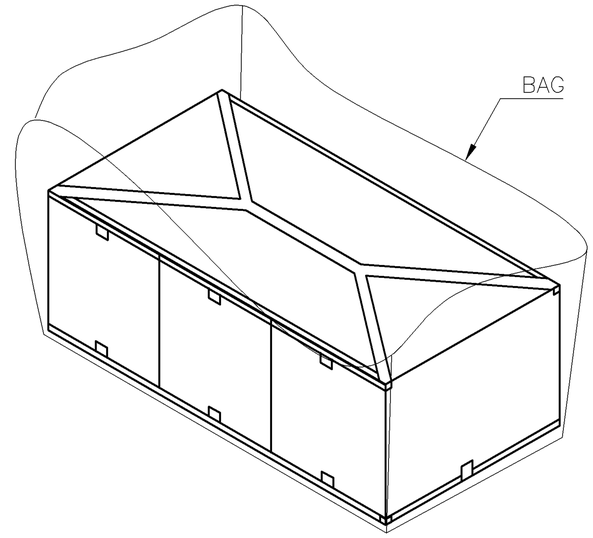

GROSS WEIGHT	NET WEIGHT	PCS/ TRAY	TRAY/ CARTON	CARTON/ BOX	PCS/ BOX	POS.
10.2 Kg	8.2 Kg	30	10	3	900	164
9.0 Kg	7.0 Kg	40	10	3	1200	98
8.5 Kg	6.5 Kg	60	10	3	1800	64
7.6 Kg	5.6 Kg	70	10	3	2100	36

THIS DRAWING IS A CONTROLLED DOCUMENT.

DIMENSIONS: MM

TOLERANCES UNLESS OTHERWISE SPECIFIED:
0 PLC ± –
1 PLC ± –
2 PLC ± –
3 PLC ± –
4 PLC ± –
ANGLES ± –

MATERIAL –
FINISH –

DWN –
CHK –
APVD –
PRODUCT SPEC –
APPLICATION SPEC –
WEIGHT –

TE Connectivity

NAME
PCI EXPRESS CARD EDGE CONNECTOR
VERTICAL, DIP TYPE, 3GIO

SIZE	CAGE CODE	DRAWING NO	RESTRICTED TO
A3	00779	C-1734774	—

CUSTOMER DRAWING | SCALE — | SHEET 4 OF 4 | REV F6

Компания «ЭлектроПласт» предлагает заключение долгосрочных отношений при поставках импортных электронных компонентов на взаимовыгодных условиях!

Наши преимущества:

- Оперативные поставки широкого спектра электронных компонентов отечественного и импортного производства напрямую от производителей и с крупнейших мировых складов;
- Поставка более 17-ти миллионов наименований электронных компонентов;
- Поставка сложных, дефицитных, либо снятых с производства позиций;
- Оперативные сроки поставки под заказ (от 5 рабочих дней);
- Экспресс доставка в любую точку России;
- Техническая поддержка проекта, помощь в подборе аналогов, поставка прототипов;
- Система менеджмента качества сертифицирована по Международному стандарту ISO 9001;
- Лицензия ФСБ на осуществление работ с использованием сведений, составляющих государственную тайну;
- Поставка специализированных компонентов (Xilinx, Altera, Analog Devices, Intersil, Interpoint, Microsemi, Aeroflex, Peregrine, Syfer, Eurofarad, Texas Instrument, Miteq, Cobham, E2V, MA-COM, Hittite, Mini-Circuits,General Dynamics и др.);

Помимо этого, одним из направлений компании «ЭлектроПласт» является направление «Источники питания». Мы предлагаем Вам помощь Конструкторского отдела:

- Подбор оптимального решения, техническое обоснование при выборе компонента;
- Подбор аналогов;
- Консультации по применению компонента;
- Поставка образцов и прототипов;
- Техническая поддержка проекта;
- Защита от снятия компонента с производства.

Как с нами связаться

Телефон: 8 (812) 309 58 32 (многоканальный)
Факс: 8 (812) 320-02-42
Электронная почта: org@eplast1.ru
Адрес: 198099, г. Санкт-Петербург, ул. Калинина, дом 2, корпус 4, литера А.