## CABLE PLUGS WITH SOCKET CONTACTS, CRIMP TERMINATION, 790-025S

790-025S connectors feature machined aluminum shells and wire grommets for environmental protection. Contacts are rear-release snap-in crimp type. Connectors are supplied with crimp contacts packaged separately. Size #23 signal pins accept up to #22 AWG wire. Size #16 contacts accept #16-18 AWG wire. Size #12 contacts accept #12-14 AWG wire. Size 12 and 16 cavities also accept coaxial contacts purchased separately. Connector shell features a groove for attachment of a low-profile EMI adapter 799-015, ordered separately.

## HOW TO ORDER

**Sample Part Number**

| 790-025S | H-5P5 | E | M | S |
|---|---|---|---|---|
| **Part Number** | **Shell Size - Insert Arr.** | **EMI Spring** | **Shell Finish** | **Hardware Option** |
| **790-025S**<br>Cable Plug With Socket Contacts | See Table 1 for Available Insert Arrangements<br><br>To order a connector without size #16 or #12 power pins, substitute "W" instead of "P" in the insert arrangement.<br><br>Example:<br><br>***36P2*** is supplied with 2 power pins.<br><br>***36W2*** is supplied less the power pins.<br><br>See Section B for coaxial contacts purchased separately. | **E**<br>EMI Spring<br><br>**N**<br>No Spring<br><br> 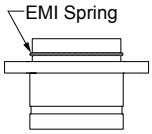 <br> | **M**<br>Electroless Nickel<br>*general purpose applications*<br><br>**MT**<br>Nickel-PTFE<br>*1000 Hour Grey™ maximum corrosion protection and durability (non-reflective grey)*<br><br>**ZNU**<br>Zinc-Nickel with Black Chromate<br>*tactical applications (non-reflective black)*<br><br>Additional shell finishes are listed on page C-9. | <br>**N**<br>Thru-Hole<br>No Hardware<br><br> 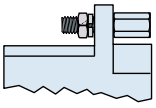 <br>**P**<br>Female Jackpost<br><br> 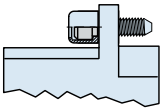 <br>**L**<br>Low-Profile Captivated Jackscrew, Hex Head<br><br> 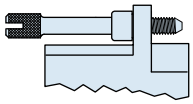 <br>**K**<br>Slot-Head Extended Jackscrew<br><br> 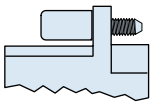 <br>**S**<br>Low-Profile Captivated Screwlock, Hex Head<br><br> 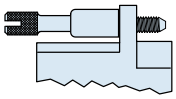 <br>**T**<br>Slot-Head Extended Captivated Screwlock |

## SPECIFICATIONS

| | |
|---|---|
| Current Rating | #23 5 AMPS, #16 13 A., #12 23 A. |
| Dielectric Withstanding Voltage | #23 500 VAC RMS, #12 and #16 1800 VAC RMS |
| Insulation Resistance | 5000 megohms minimum |
| Operating Temperature | -65° C. to +150° C. |
| Shock | 300 g. |
| Vibration | 37 g. |

## MATERIALS AND FINISHES

| | |
|---|---|
| Shell | Aluminum alloy |
| Contacts | Copper alloy, 50 microinches gold plated, stainless steel hood |
| Insulators | Liquid crystal polymer (LCP) |
| Retention Clips | Beryllium copper alloy |
| Grommet | Flourosilicone rubber |
| Hardware | 300 series stainless steel |

Dimensions in inches (millimeters) and are subject to change without notice.

© 2009 Glenair, Inc.

## Table 1 Contact Arrangements

| Layout | Contact Quantity #23 | #16 | #12 | Face View |
|---|---|---|---|---|
| A-5 | 5 | | | |
| B-2P2 | | 2 | | |
| B-9 | 9 | | | |
| C-13 | 13 | | | |
| D-15 | 15 | | | |
| D-3P3 | | 3 | | |
| D-7P2 | 5 | 2 | | |
| E-11P2 | 9 | 2 | | |
| E-19 | 19 | | | |
| E-7P3 | 4 | 3 | | |
| F-15P2 | 13 | 2 | | |
| F-23 | 23 | | | |
| F-5P5 | | 5 | | |
| G-33 | 33 | | | |
| H-10P4 | 6 | | 4 | |
| H-29P7 | 22 | 7 | | |
| H-36P2 | 34 | | 2 | |
| H-54P2 | 52 | 2 | | |
| H-5P5 | | | 5 | |
| H-66 | 66 | | | |
| J-17P4 | 13 | 4 | | |
| J-25P2 | 23 | 2 | | |
| J-33 | 33 | | | |
| J-7P7 | | 7 | | |
| K-27P4 | 23 | 4 | | |
| K-35P2 | 33 | 2 | | |
| K-43 | 43 | | | |
| K-9P9 | | 9 | | |
| L-6P6 | | | 6 | |

## CROSS-SECTIONAL VIEW OF 790-025S

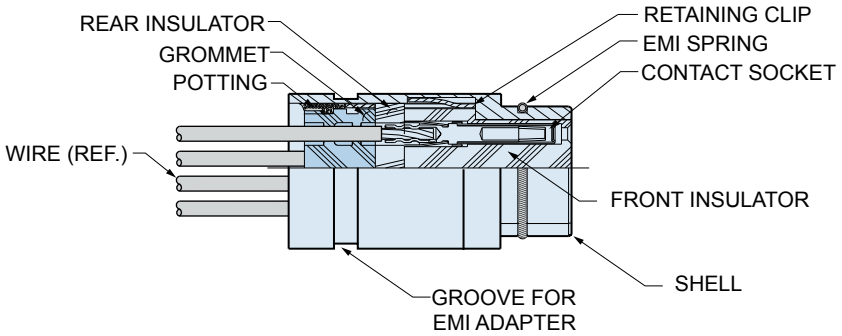


## TABLE 2 HARDWARE OPTION

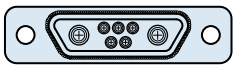

### N
### No Mating Hardware

Connector is supplied with thru-holes. Shell sizes H and L are .148" (3.76) diameter, other shell sizes are .092" (2.34) diameter. Accepts standard Micro-D M83513 hardware.

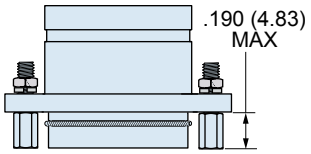


### P
### Jackposts

Connector is supplied with removable jackposts. Shell sizes H and L have #4-40 UNC thread, other sizes have #2-56 thread. Stainless steel. Conforms to M83513/05.

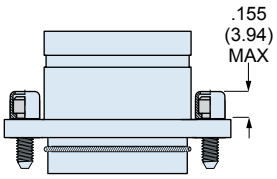


### L
### Hex Head Jackscrews

Connector is supplied with stainless steel non-removable low profile jackscrews. Shell sizes H and L have #4-40 UNC thread, other sizes have #2-56 thread.

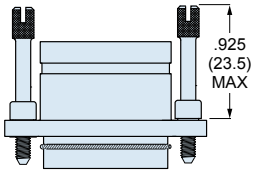


### K
### Extended Jackscrews

Connector is supplied with stainless steel slot head non-removable jackscrews. Shell sizes H and L have #4-40 UNC thread, other sizes have #2-56 thread.

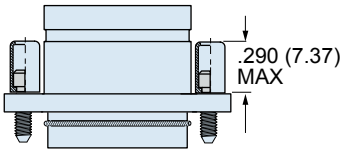


### S
### Hex Head Screwlocks

Connector is supplied with stainless steel non-removable low profile screwlocks. Shell sizes H and L have #4-40 UNC thread, other sizes have #2-56 thread. Screwlocks allow the connector to be mated before the screws are fastened.

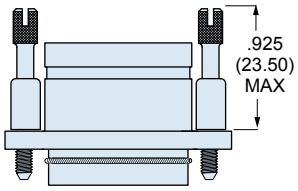


### T
### Extended Screwlocks

Connector is supplied with stainless steel non-removable slot head screwlocks. Shell sizes H and L have #4-40 UNC thread, other sizes have #2-56 thread. Screwlocks allow the connector to be mated before the screws are fastened.

Dimensions in inches (millimeters) and are subject to change without notice.

© 2009 Glenair, Inc.
CAGE Code 06324
Printed in U.S.A.

## 790-025S DIMENSIONS

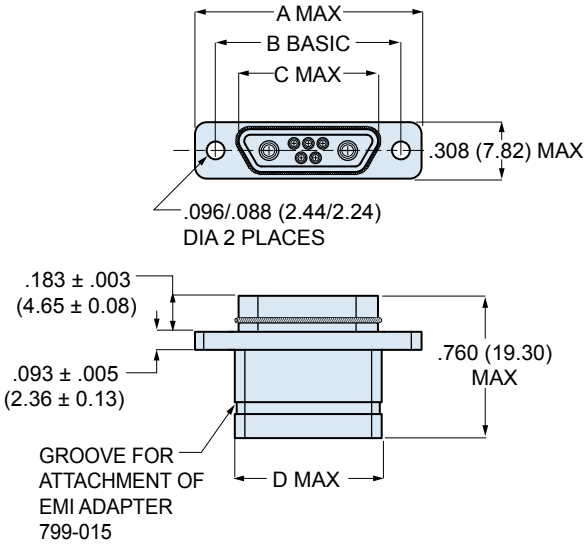


### SHELL SIZES A, B, C, D, E, F, J, K

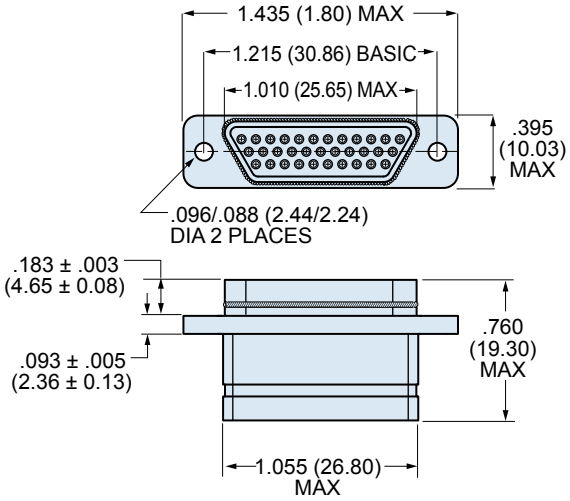


### SHELL SIZE G

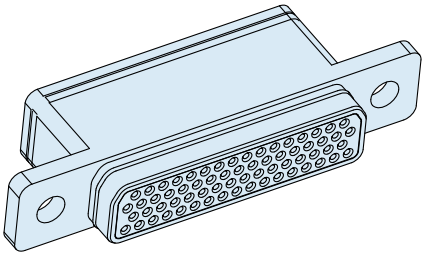

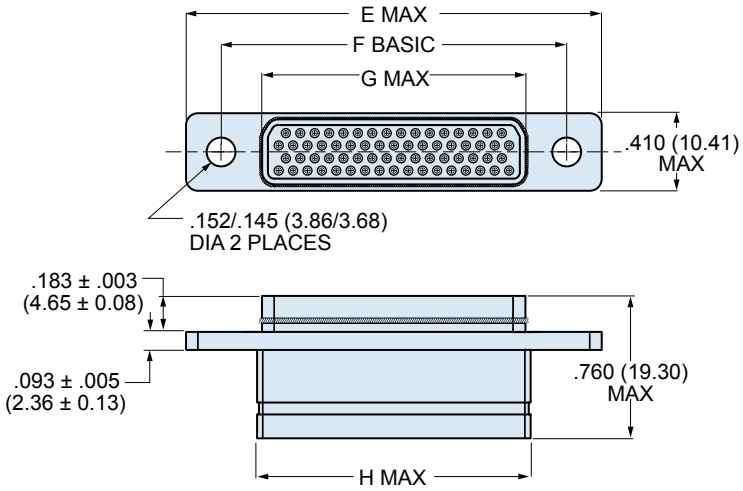


### SHELL SIZE H AND L

## 790-025S DIMENSIONS

| Shell Size | A Max. | | B Basic | | C Max. | | D Max. | | E Max. | | F Basic | | G Max. | | H Max. | |
|---|---|---|---|---|---|---|---|---|---|---|---|---|---|---|---|---|
| | In. | mm. | In . | mm. | In. | mm. | In. | mm. | In. | mm. | In. | mm. | In. | mm. | In. | mm. |
| A | .785 | 19.94 | .565 | 14.35 | .335 | 8.51 | .390 | 9.91 | — | — | — | — | — | — | — | — |
| B | .935 | 23.75 | .715 | 18.16 | .485 | 12.32 | .540 | 13.72 | — | — | — | — | — | — | — | — |
| C | 1.085 | 27.65 | .865 | 21.97 | .635 | 16.13 | .690 | 17.53 | — | — | — | — | — | — | — | — |
| D | 1.185 | 30.10 | .965 | 24.51 | .735 | 18.67 | .790 | 20.07 | — | — | — | — | — | — | — | — |
| E | 1.335 | 33.91 | 1.115 | 28.32 | .885 | 22.48 | .940 | 23.88 | — | — | — | — | — | — | — | — |
| F | 1.485 | 37.72 | 1.265 | 32.13 | 1.035 | 26.29 | 1.090 | 27.69 | — | — | — | — | — | — | — | — |
| H | — | — | — | — | — | — | — | — | 2.175 | 55.25 | 1.800 | 45.72 | 1.385 | 35.18 | 1.440 | 36.58 |
| J | 1.845 | 46.86 | 1.615 | 41.02 | 1.390 | 35.61 | 1.450 | 36.83 | — | — | — | — | — | — | — | — |
| K | 2.240 | 56.90 | 2.015 | 51.18 | 1.795 | 45.59 | 1.840 | 46.74 | — | — | — | — | — | — | — | — |
| L | — | — | — | — | — | — | — | — | 2.420 | 61.47 | 2.036 | 51.71 | 1.623 | 41.22 | 1.675 | 42.55 |

Dimensions in inches (millimeters) and are subject to change without notice.

© 2009 Glenair, Inc.
CAGE Code 06324
Printed in U.S.A.

Компания «ЭлектроПласт» предлагает заключение долгосрочных отношений при поставках импортных электронных компонентов на взаимовыгодных условиях!

Наши преимущества:

- Оперативные поставки широкого спектра электронных компонентов отечественного и импортного производства напрямую от производителей и с крупнейших мировых складов;
- Поставка более 17-ти миллионов наименований электронных компонентов;
- Поставка сложных, дефицитных, либо снятых с производства позиций;
- Оперативные сроки поставки под заказ (от 5 рабочих дней);
- Экспресс доставка в любую точку России;
- Техническая поддержка проекта, помощь в подборе аналогов, поставка прототипов;
- Система менеджмента качества сертифицирована по Международному стандарту ISO 9001;
- Лицензия ФСБ на осуществление работ с использованием сведений, составляющих государственную тайну;
- Поставка специализированных компонентов (Xilinx, Altera, Analog Devices, Intersil, Interpoint, Microsemi, Aeroflex, Peregrine, Syfer, Eurofarad, Texas Instrument, Miteq, Cobham, E2V, MA-COM, Hittite, Mini-Circuits,General Dynamics и др.);

Помимо этого, одним из направлений компании «ЭлектроПласт» является направление «Источники питания». Мы предлагаем Вам помощь Конструкторского отдела:

- Подбор оптимального решения, техническое обоснование при выборе компонента;
- Подбор аналогов;
- Консультации по применению компонента;
- Поставка образцов и прототипов;
- Техническая поддержка проекта;
- Защита от снятия компонента с производства.

**Как с нами связаться**

**Телефон:** 8 (812) 309 58 32 (многоканальный)
**Факс:** 8 (812) 320-02-42
**Электронная почта:** org@eplast1.ru
**Адрес:** 198099, г. Санкт-Петербург, ул. Калинина, дом 2, корпус 4, литера А.