bq2201

SRAM Nonvolatile Controller Unit

Features

- Power monitoring and switching for 3-volt battery-backup applications
- Write-protect control
- 3-volt primary cell inputs
- Less than 10ns chip-enable propagation delay
- 5% or 10% supply operation

General Description

The CMOS bq2201 SRAM Nonvolatile Controller Unit provides all necessary functions for converting a standard CMOS SRAM into nonvolatile read/write memory.

A precision comparator monitors the 5V V_{CC} input for an out-of-tolerance condition. When out of tolerance is detected, a conditioned chip-enable output is forced inactive to write-protect any standard CMOS SRAM.

During a power failure, the external SRAM is switched from the V_{CC} supply to one of two 3V backup supplies. On a subsequent power-up, the SRAM is write-protected until a power-valid condition exists.

The bq2201 is footprint- and timing-compatible with industry standards with the added benefit of a chip-enable propagation delay of less than 10ns.

Pin Connections

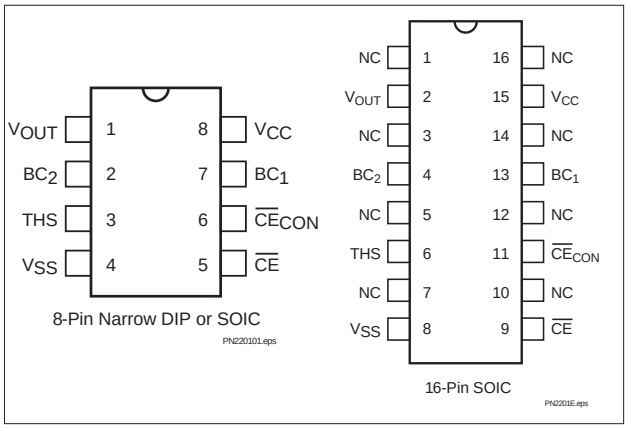

Pin Names

V_{OUT}	Supply output
BC_1—BC_2	3-volt primary backup cell inputs
THS	Threshold select input
$\overline{CE}$	chip-enable active low input
$\overline{CE}_{CON}$	Conditioned chip-enable output
V_{CC}	+5-volt supply input
V_{SS}	Ground
NC	No Connect

Functional Description

An external CMOS static RAM can be battery-backed using the V_{OUT} and the conditioned chip-enable output pin from the bq2201. As V_{CC} slews down during a power failure, the conditioned chip-enable output $\overline{CE}_{CON}$ is forced inactive independent of the chip-enable input $\overline{CE}$.

This activity unconditionally write-protects external SRAM as V_{CC} falls to an out-of-tolerance threshold V_{PFD}. V_{PFD} is selected by the threshold select input pin, THS.

If THS is tied to V_{SS}, power-fail detection occurs at 4.62V typical for 5% supply operation. If THS is tied to V_{CC}, power-fail detection occurs at 4.37V typical for 10% supply operation. The THS pin must be tied to V_{SS} or V_{CC} for proper operation.

If a memory access is in process during power-fail detection, that memory cycle continues to completion before the memory is write-protected. If the memory cycle is not terminated within time t_{WPT}, the $\overline{CE}_{CON}$ output is unconditionally driven high, write-protecting the memory.

Oct. 1998 D

As the supply continues to fall past V_{PFD}, an internal switching device forces V_{OUT} to one of the two external backup energy sources. $\overline{CE}_{CON}$ is held high by the V_{OUT} energy source.

During power-up, V_{OUT} is switched back to the V_{CC} supply as V_{CC} rises above the backup cell input voltage sourcing V_{OUT}. The $\overline{CE}_{CON}$ output is held inactive for time t_{CER} (120 ms maximum) after the supply has reached V_{PFD}, independent of the $\overline{CE}$ input, to allow for processor stabilization.

During power-valid operation, the $\overline{CE}$ input is fed through to the $\overline{CE}_{CON}$ output with a propagation delay of less than 10ns. Nonvolatility is achieved by hardware hookup, as shown in Figure 1.

Energy Cell Inputs—BC_1, BC_2

Two primary backup energy source inputs are provided on the bq2201. The BC_1 and BC_2 inputs accept a 3V primary battery, typically some type of lithium chemistry. If no primary cell is to be used on either BC_1 or BC_2, the unused input should be tied to V_{SS}.

If both inputs are used, during power failure the V_{OUT} output is fed only by BC_1 as long as it is greater than 2.5V. If the voltage at BC_1 falls below 2.5V, an internal isolation switch automatically switches V_{OUT} from BC_1 to BC_2.

To prevent battery drain when there is no valid data to retain, V_{OUT} and $\overline{CE}_{CON}$ are internally isolated from BC_1 and BC_2 by either of the following:

- Initial connection of a battery to BC_1 or BC_2, or
- Presentation of an isolation signal on $\overline{CE}$.

A valid isolation signal requires $\overline{CE}$ low as V_{CC} crosses both V_{PFD} and V_{SO} during a power-down. See Figure 2. Between these two points in time, $\overline{CE}$ must be brought to the point of (0.48 to 0.52)*V_{CC} and held for at least 700ns. The isolation signal is invalid if $\overline{CE}$ exceeds 0.54*V_{CC} at any point between V_{CC} crossing V_{PFD} and V_{SO}.

The appropriate battery is connected to V_{OUT} and $\overline{CE}_{CON}$ immediately on subsequent application and removal of V_{CC}.

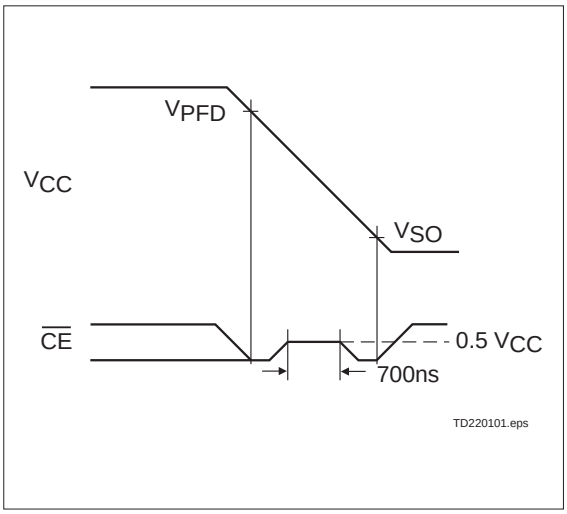

Figure 2. Battery Isolation Signal

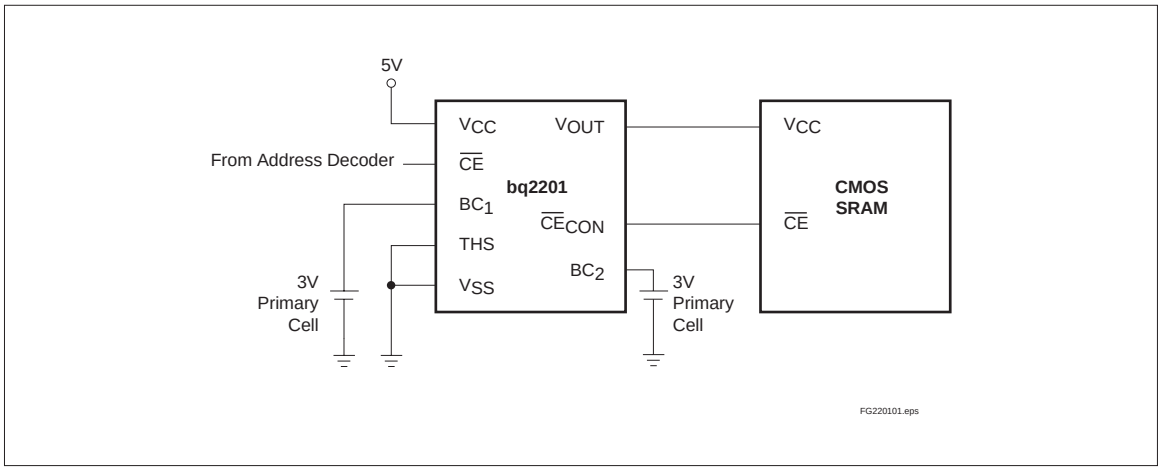

Figure 1. Hardware Hookup (5% Supply Operation)

Absolute Maximum Ratings

Symbol	Parameter	Value	Unit	Conditions
V_{CC}	DC voltage applied on V_{CC} relative to V_{SS}	-0.3 to 7.0	V	
V_T	DC voltage applied on any pin excluding V_{CC} relative to V_{SS}	-0.3 to 7.0	V	$V_T \leq V_{CC} + 0.3$
T_{OPR}	Operating temperature	0 to +70	°C	Commercial
		-40 to +85	°C	Industrial "N"
T_{STG}	Storage temperature	-55 to +125	°C	
T_{BIAS}	Temperature under bias	-40 to +85	°C	
T_{SOLDER}	Soldering temperature	260	°C	For 10 seconds
I_{OUT}	V_{OUT} current	200	mA	

Note: Permanent device damage may occur if **Absolute Maximum Ratings** are exceeded. Functional operation should be limited to the Recommended DC Operating Conditions detailed in this data sheet. Exposure to conditions beyond the operational limits for extended periods of time may affect device reliability.

Recommended DC Operating Conditions ($T_A = T_{OPR}$)

Symbol	Parameter	Minimum	Typical	Maximum	Unit	Notes
V_{CC}	Supply voltage	4.75	5.0	5.5	V	THS = V_{SS}
		4.50	5.0	5.5	V	THS = V_{CC}
V_{SS}	Supply voltage	0	0	0	V	
V_{IL}	Input low voltage	-0.3	-	0.8	V	
V_{IH}	Input high voltage	2.2	-	$V_{CC} + 0.3$	V	
V_{BC1}, V_{BC2}	Backup cell voltage	2.0	-	4.0	V	
THS	Threshold select	-0.3	-	$V_{CC} + 0.3$	V	

Note: Typical values indicate operation at $T_A = 25°C$, $V_{CC} = 5V$ or V_{BC}.

DC Electrical Characteristics ($T_A = T_{OPR}$, V_{CC} = 5V ± 10%)

Symbol	Parameter	Minimum	Typical	Maximum	Unit	Conditions/Notes
I_{LI}	Input leakage current	-	-	± 1	µA	$V_{IN} = V_{SS}$ to V_{CC}
V_{OH}	Output high voltage	2.4	-	-	V	I_{OH} = -2.0mA
V_{OHB}	V_{OH}, BC supply	V_{BC} - 0.3	-	-	V	$V_{BC} > V_{CC}$, I_{OH} = -10µA
V_{OL}	Output low voltage	-	-	0.4	V	I_{OL} = 4.0mA
I_{CC}	Operating supply current	-	3	5	mA	No load on V_{OUT} and $\overline{CE}_{CON}$.
V_{PFD}	Power-fail detect voltage	4.55	4.62	4.75	V	THS = V_{SS}
		4.30	4.37	4.50	V	THS = V_{CC}
V_{SO}	Supply switch-over voltage	-	V_{BC}	-	V	
I_{CCDR}	Data-retention mode current	-	-	100	nA	V_{OUT} data-retention current to additional memory not included.
V_{OUT1}	V_{OUT} voltage	V_{CC} - 0.2	-	-	V	$V_{CC} > V_{BC}$, I_{OUT} = 100mA
		V_{CC} - 0.3	-	-	V	$V_{CC} > V_{BC}$, I_{OUT} = 160mA
V_{OUT2}	V_{OUT} voltage	V_{BC} - 0.3	-	-	V	$V_{CC} < V_{BC}$, I_{OUT} = 100µA
V_{BC}	Active backup cell voltage	-	V_{BC2}	-	V	V_{BC1} < 2.5V
		-	V_{BC1}	-	V	V_{BC1} > 2.5V
I_{OUT1}	V_{OUT} current	-	-	160	mA	$V_{OUT} > V_{CC}$ - 0.3V
I_{OUT2}	V_{OUT} current	-	100	-	µA	$V_{OUT} > V_{BC}$ - 0.2V

Note: Typical values indicate operation at T_A = 25°C, V_{CC} = 5V or V_{BC}.

Capacitance (T_A = 25°C, F = 1MHz, V_{CC} = 5.0V)

Symbol	Parameter	Minimum	Typical	Maximum	Unit	Conditions
C_{IN}	Input capacitance	-	-	8	pF	Input voltage = 0V
C_{OUT}	Output capacitance	-	-	10	pF	Output voltage = 0V

Note: This parameter is sampled and not 100% tested.

AC Test Conditions

Parameter	Test Conditions
Input pulse levels	0V to 3.0V
Input rise and fall times	5ns
Input and output timing reference levels	1.5V (unless otherwise specified)
Output load (including scope and jig)	See Figure 3

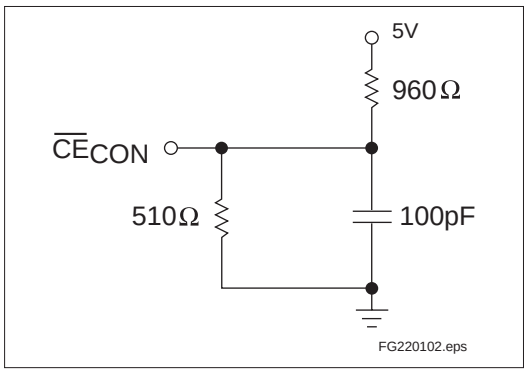

Figure 3. Output Load

Power-Fail Control (TA = TOPR)

Symbol	Parameter	Minimum	Typical	Maximum	Unit	Notes
t_{PF}	V_{CC} slew, 4.75V to 4.25V	300	-	-	µs	
t_{FS}	V_{CC} slew, 4.25V to V_{SO}	10	-	-	µs	
t_{PU}	V_{CC} slew, 4.25V to 4.75V	0	-	-	µs	
t_{CED}	Chip-enable propagation delay	-	7	10	ns	
t_{CER}	Chip-enable recovery	40	80	120	ms	Time during which SRAM is write-protected after V_{CC} passes V_{PFD} on power-up.
t_{WPT}	Write-protect time	40	100	150	µs	Delay after V_{CC} slews down past V_{PFD} before SRAM is write-protected.

Note: Typical values indicate operation at T_A = 25°C.

Caution: **Negative undershoots below the absolute maximum rating of -0.3V in battery-backup mode may affect data integrity.**

Power-Down Timing

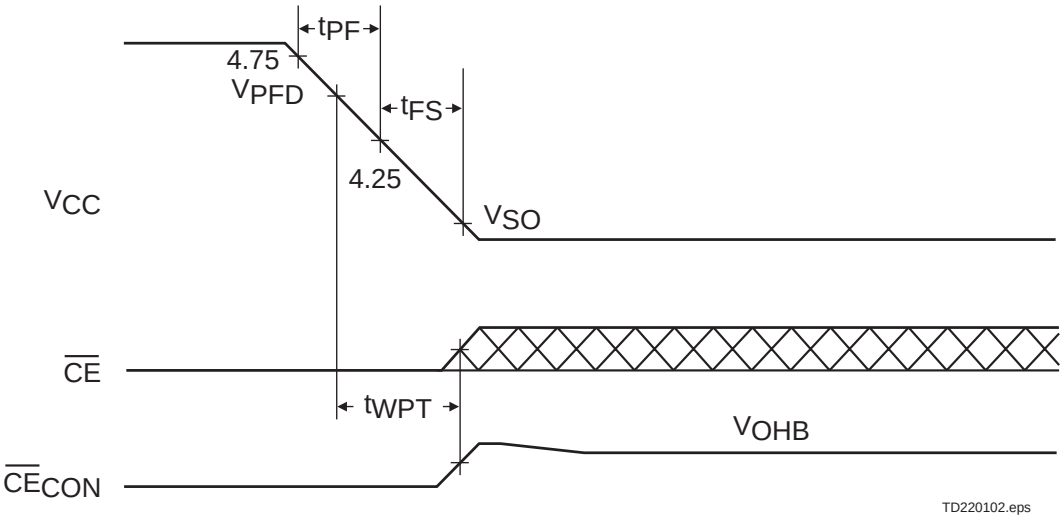

Power-Up Timing

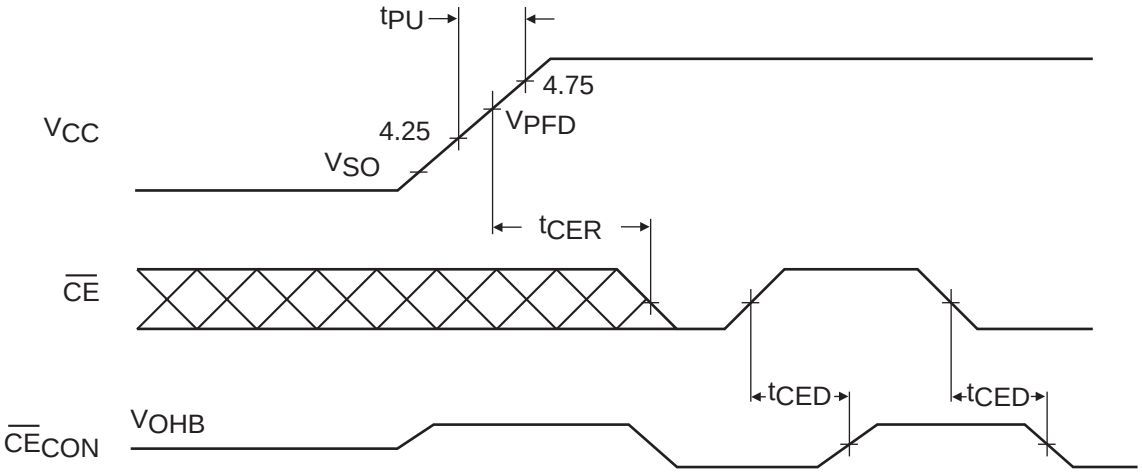

TD220103.eps

8-Pin DIP Narrow (PN)

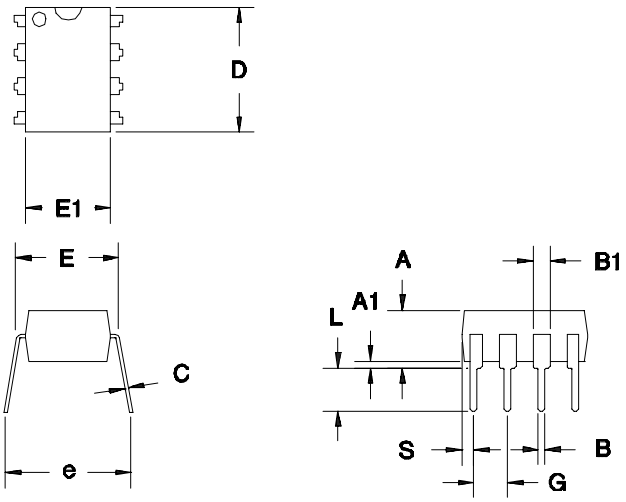

8-Pin DIP Narrow (PN)

Dimension	Minimum	Maximum
A	0.160	0.180
A1	0.015	0.040
B	0.015	0.022
B1	0.055	0.065
C	0.008	0.013
D	0.350	0.380
E	0.300	0.325
E1	0.230	0.280
e	0.300	0.370
G	0.090	0.110
L	0.115	0.150
S	0.020	0.040

All dimensions are in inches.

8-Pin SOIC Narrow (SN)

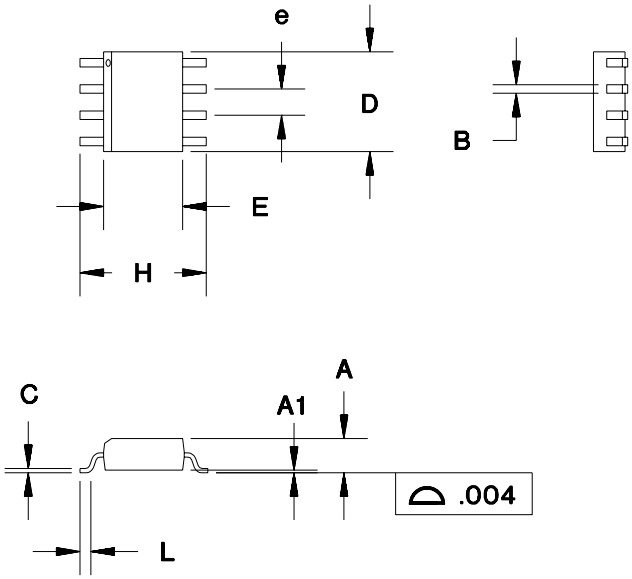

8-Pin SOIC Narrow (SN)

Dimension	Minimum	Maximum
A	0.060	0.070
A1	0.004	0.010
B	0.013	0.020
C	0.007	0.010
D	0.185	0.200
E	0.150	0.160
e	0.045	0.055
H	0.225	0.245
L	0.015	0.035

All dimensions are in inches.

S: 16-Pin SOIC

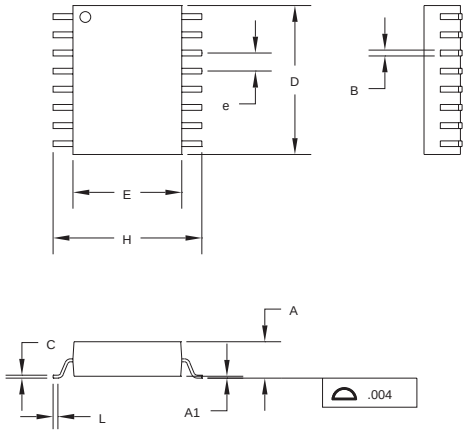

16-Pin S (SOIC)

Dimension	Minimum	Maximum
A	0.095	0.105
A1	0.004	0.012
B	0.013	0.020
C	0.008	0.013
D	0.400	0.415
E	0.290	0.305
e	0.045	0.055
H	0.395	0.415
L	0.020	0.040

All dimensions are in inches.

Data Sheet Revision History

Change No.	Page No.	Description	Nature of Change
1		Added industrial temperature range	
2	1, 3, 4	10% supply operation	Was: THS tied to V_{OUT} Is: THS tied to V_{CC}
3	1, 9, 11	Added 16-pin package option	

Note: Change 1 = Sept. 1991 B changes from Sept. 1990 A.
Change 2 = Aug. 1997 C changes from Sept. 1991 B.
Change 3 = Oct. 1998 D changes from Aug. 1997 C.

Ordering Information

bq2201 _ _

Temperature Range:
blank = Commercial (0 to +70°C)
N = Industrial (-40 to +85°C)

Package Option:
PN = 8-pin narrow plastic DIP
SN = 8-pin narrow SOIC
S = 16-pin SOIC

Device:
bq2201 Nonvolatile SRAM Controller

PACKAGING INFORMATION

Orderable Device	Status [1]	Package Type	Package Drawing	Pins	Package Qty	Eco Plan [2]	Lead/Ball Finish	MSL Peak Temp [3]
BQ2201PN	ACTIVE	PDIP	P	8	50	Pb-Free (RoHS)	CU NIPDAU	N / A for Pkg Type
BQ2201PNE4	ACTIVE	PDIP	P	8	50	Pb-Free (RoHS)	CU NIPDAU	N / A for Pkg Type
BQ2201SN	ACTIVE	SOIC	D	8	75	Green (RoHS & no Sb/Br)	CU NIPDAU	Level-1-260C-UNLIM
BQ2201SN-N	ACTIVE	SOIC	D	8	75	Green (RoHS & no Sb/Br)	CU NIPDAU	Level-1-260C-UNLIM
BQ2201SN-NG4	ACTIVE	SOIC	D	8	75	Green (RoHS & no Sb/Br)	CU NIPDAU	Level-1-260C-UNLIM
BQ2201SN-NTR	ACTIVE	SOIC	D	8	2500	Green (RoHS & no Sb/Br)	CU NIPDAU	Level-1-260C-UNLIM
BQ2201SN-NTRG4	ACTIVE	SOIC	D	8	2500	Green (RoHS & no Sb/Br)	CU NIPDAU	Level-1-260C-UNLIM
BQ2201SNG4	ACTIVE	SOIC	D	8	75	Green (RoHS & no Sb/Br)	CU NIPDAU	Level-1-260C-UNLIM
BQ2201SNTR	ACTIVE	SOIC	D	8	2500	Green (RoHS & no Sb/Br)	CU NIPDAU	Level-1-260C-UNLIM
BQ2201SNTRG4	ACTIVE	SOIC	D	8	2500	Green (RoHS & no Sb/Br)	CU NIPDAU	Level-1-260C-UNLIM

[1] The marketing status values are defined as follows:
ACTIVE: Product device recommended for new designs.
LIFEBUY: TI has announced that the device will be discontinued, and a lifetime-buy period is in effect.
NRND: Not recommended for new designs. Device is in production to support existing customers, but TI does not recommend using this part in a new design.
PREVIEW: Device has been announced but is not in production. Samples may or may not be available.
OBSOLETE: TI has discontinued the production of the device.

[2] Eco Plan - The planned eco-friendly classification: Pb-Free (RoHS), Pb-Free (RoHS Exempt), or Green (RoHS & no Sb/Br) - please check http://www.ti.com/productcontent for the latest availability information and additional product content details.
TBD: The Pb-Free/Green conversion plan has not been defined.
Pb-Free (RoHS): TI's terms "Lead-Free" or "Pb-Free" mean semiconductor products that are compatible with the current RoHS requirements for all 6 substances, including the requirement that lead not exceed 0.1% by weight in homogeneous materials. Where designed to be soldered at high temperatures, TI Pb-Free products are suitable for use in specified lead-free processes.
Pb-Free (RoHS Exempt): This component has a RoHS exemption for either 1) lead-based flip-chip solder bumps used between the die and package, or 2) lead-based die adhesive used between the die and leadframe. The component is otherwise considered Pb-Free (RoHS compatible) as defined above.
Green (RoHS & no Sb/Br): TI defines "Green" to mean Pb-Free (RoHS compatible), and free of Bromine (Br) and Antimony (Sb) based flame retardants (Br or Sb do not exceed 0.1% by weight in homogeneous material)

[3] MSL, Peak Temp. -- The Moisture Sensitivity Level rating according to the JEDEC industry standard classifications, and peak solder temperature.

Important Information and Disclaimer: The information provided on this page represents TI's knowledge and belief as of the date that it is provided. TI bases its knowledge and belief on information provided by third parties, and makes no representation or warranty as to the accuracy of such information. Efforts are underway to better integrate information from third parties. TI has taken and continues to take reasonable steps to provide representative and accurate information but may not have conducted destructive testing or chemical analysis on incoming materials and chemicals. TI and TI suppliers consider certain information to be proprietary, and thus CAS numbers and other limited information may not be available for release.

In no event shall TI's liability arising out of such information exceed the total purchase price of the TI part(s) at issue in this document sold by TI to Customer on an annual basis.

TAPE AND REEL INFORMATION

REEL DIMENSIONS

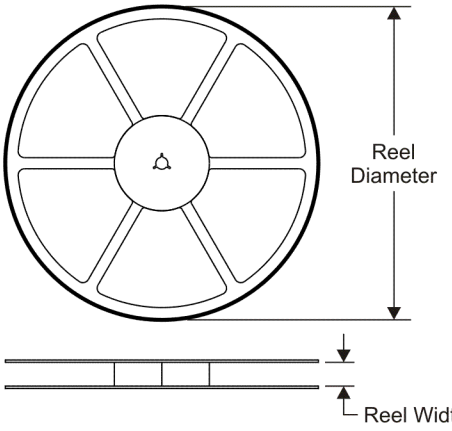

TAPE DIMENSIONS

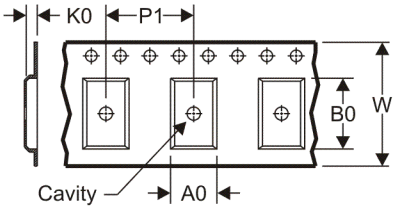

A0	Dimension designed to accommodate the component width
B0	Dimension designed to accommodate the component length
K0	Dimension designed to accommodate the component thickness
W	Overall width of the carrier tape
P1	Pitch between successive cavity centers

QUADRANT ASSIGNMENTS FOR PIN 1 ORIENTATION IN TAPE

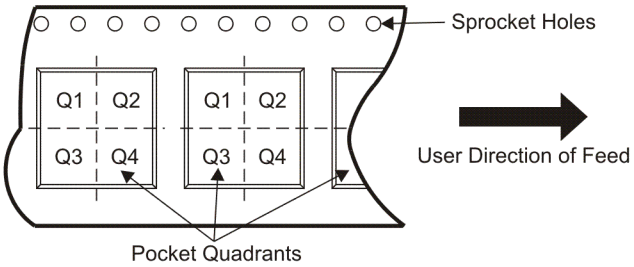

*All dimensions are nominal

Device	Package Type	Package Drawing	Pins	SPQ	Reel Diameter (mm)	Reel Width W1 (mm)	A0 (mm)	B0 (mm)	K0 (mm)	P1 (mm)	W (mm)	Pin1 Quadrant
BQ2201SN-NTR	SOIC	D	8	2500	330.0	12.4	6.4	5.2	2.1	8.0	12.0	Q1
BQ2201SNTR	SOIC	D	8	2500	330.0	12.4	6.4	5.2	2.1	8.0	12.0	Q1

TAPE AND REEL BOX DIMENSIONS

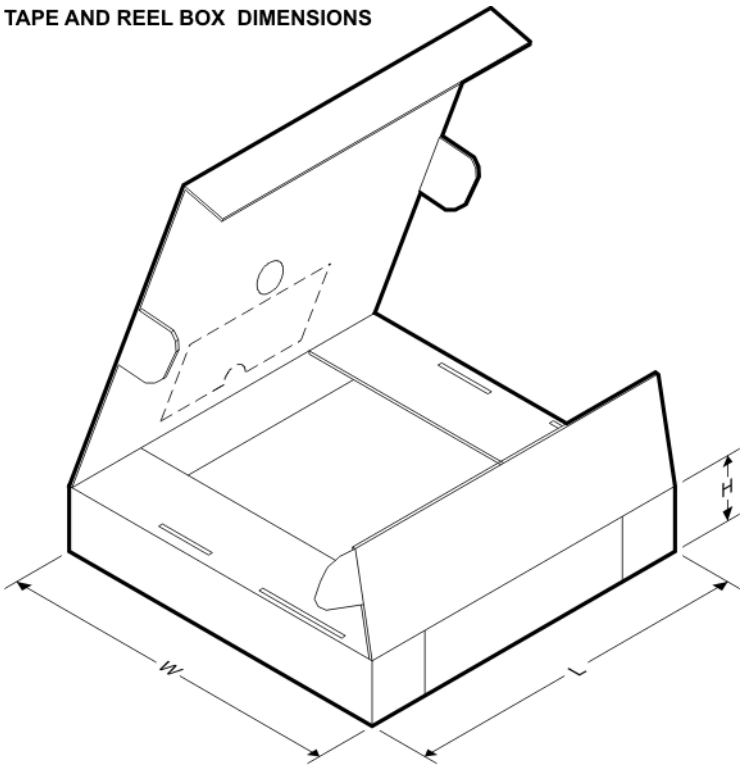

*All dimensions are nominal

Device	Package Type	Package Drawing	Pins	SPQ	Length (mm)	Width (mm)	Height (mm)
BQ2201SN-NTR	SOIC	D	8	2500	346.0	346.0	29.0
BQ2201SNTR	SOIC	D	8	2500	346.0	346.0	29.0

IMPORTANT NOTICE

Texas Instruments Incorporated and its subsidiaries (TI) reserve the right to make corrections, modifications, enhancements, improvements, and other changes to its products and services at any time and to discontinue any product or service without notice. Customers should obtain the latest relevant information before placing orders and should verify that such information is current and complete. All products are sold subject to TI's terms and conditions of sale supplied at the time of order acknowledgment.

TI warrants performance of its hardware products to the specifications applicable at the time of sale in accordance with TI's standard warranty. Testing and other quality control techniques are used to the extent TI deems necessary to support this warranty. Except where mandated by government requirements, testing of all parameters of each product is not necessarily performed.

TI assumes no liability for applications assistance or customer product design. Customers are responsible for their products and applications using TI components. To minimize the risks associated with customer products and applications, customers should provide adequate design and operating safeguards.

TI does not warrant or represent that any license, either express or implied, is granted under any TI patent right, copyright, mask work right, or other TI intellectual property right relating to any combination, machine, or process in which TI products or services are used. Information published by TI regarding third-party products or services does not constitute a license from TI to use such products or services or a warranty or endorsement thereof. Use of such information may require a license from a third party under the patents or other intellectual property of the third party, or a license from TI under the patents or other intellectual property of TI.

Reproduction of TI information in TI data books or data sheets is permissible only if reproduction is without alteration and is accompanied by all associated warranties, conditions, limitations, and notices. Reproduction of this information with alteration is an unfair and deceptive business practice. TI is not responsible or liable for such altered documentation. Information of third parties may be subject to additional restrictions.

Resale of TI products or services with statements different from or beyond the parameters stated by TI for that product or service voids all express and any implied warranties for the associated TI product or service and is an unfair and deceptive business practice. TI is not responsible or liable for any such statements.

TI products are not authorized for use in safety-critical applications (such as life support) where a failure of the TI product would reasonably be expected to cause severe personal injury or death, unless officers of the parties have executed an agreement specifically governing such use. Buyers represent that they have all necessary expertise in the safety and regulatory ramifications of their applications, and acknowledge and agree that they are solely responsible for all legal, regulatory and safety-related requirements concerning their products and any use of TI products in such safety-critical applications, notwithstanding any applications-related information or support that may be provided by TI. Further, Buyers must fully indemnify TI and its representatives against any damages arising out of the use of TI products in such safety-critical applications.

TI products are neither designed nor intended for use in military/aerospace applications or environments unless the TI products are specifically designated by TI as military-grade or "enhanced plastic." Only products designated by TI as military-grade meet military specifications. Buyers acknowledge and agree that any such use of TI products which TI has not designated as military-grade is solely at the Buyer's risk, and that they are solely responsible for compliance with all legal and regulatory requirements in connection with such use.

TI products are neither designed nor intended for use in automotive applications or environments unless the specific TI products are designated by TI as compliant with ISO/TS 16949 requirements. Buyers acknowledge and agree that, if they use any non-designated products in automotive applications, TI will not be responsible for any failure to meet such requirements.

Following are URLs where you can obtain information on other Texas Instruments products and application solutions:

Products		**Applications**	
Amplifiers	amplifier.ti.com	Audio	www.ti.com/audio
Data Converters	dataconverter.ti.com	Automotive	www.ti.com/automotive
DSP	dsp.ti.com	Broadband	www.ti.com/broadband
Clocks and Timers	www.ti.com/clocks	Digital Control	www.ti.com/digitalcontrol
Interface	interface.ti.com	Medical	www.ti.com/medical
Logic	logic.ti.com	Military	www.ti.com/military
Power Mgmt	power.ti.com	Optical Networking	www.ti.com/opticalnetwork
Microcontrollers	microcontroller.ti.com	Security	www.ti.com/security
RFID	www.ti-rfid.com	Telephony	www.ti.com/telephony
RF/IF and ZigBee® Solutions	www.ti.com/lprf	Video & Imaging	www.ti.com/video
		Wireless	www.ti.com/wireless

Mailing Address: Texas Instruments, Post Office Box 655303, Dallas, Texas 75265
Copyright © 2008, Texas Instruments Incorporated

Компания «ЭлектроПласт» предлагает заключение долгосрочных отношений при поставках импортных электронных компонентов на взаимовыгодных условиях!

Наши преимущества:

- Оперативные поставки широкого спектра электронных компонентов отечественного и импортного производства напрямую от производителей и с крупнейших мировых складов;
- Поставка более 17-ти миллионов наименований электронных компонентов;
- Поставка сложных, дефицитных, либо снятых с производства позиций;
- Оперативные сроки поставки под заказ (от 5 рабочих дней);
- Экспресс доставка в любую точку России;
- Техническая поддержка проекта, помощь в подборе аналогов, поставка прототипов;
- Система менеджмента качества сертифицирована по Международному стандарту ISO 9001;
- Лицензия ФСБ на осуществление работ с использованием сведений, составляющих государственную тайну;
- Поставка специализированных компонентов (Xilinx, Altera, Analog Devices, Intersil, Interpoint, Microsemi, Aeroflex, Peregrine, Syfer, Eurofarad, Texas Instrument, Miteq, Cobham, E2V, MA-COM, Hittite, Mini-Circuits,General Dynamics и др.);

Помимо этого, одним из направлений компании «ЭлектроПласт» является направление «Источники питания». Мы предлагаем Вам помощь Конструкторского отдела:

- Подбор оптимального решения, техническое обоснование при выборе компонента;
- Подбор аналогов;
- Консультации по применению компонента;
- Поставка образцов и прототипов;
- Техническая поддержка проекта;
- Защита от снятия компонента с производства.

Как с нами связаться

Телефон: 8 (812) 309 58 32 (многоканальный)
Факс: 8 (812) 320-02-42
Электронная почта: org@eplast1.ru
Адрес: 198099, г. Санкт-Петербург, ул. Калинина, дом 2, корпус 4, литера А.