# Enclosures and cable glands
# Catalogue 2013/2014
Let's connect.

Klippon® – enclosure system

Weidmüller

# The World of Industrial Connectivity

As experienced experts we support our customers and partners around the world with products, solutions and services in the industrial environment of power, signal and data. Immerse yourself in our world of Industrial Connectivity.
Let's connect.

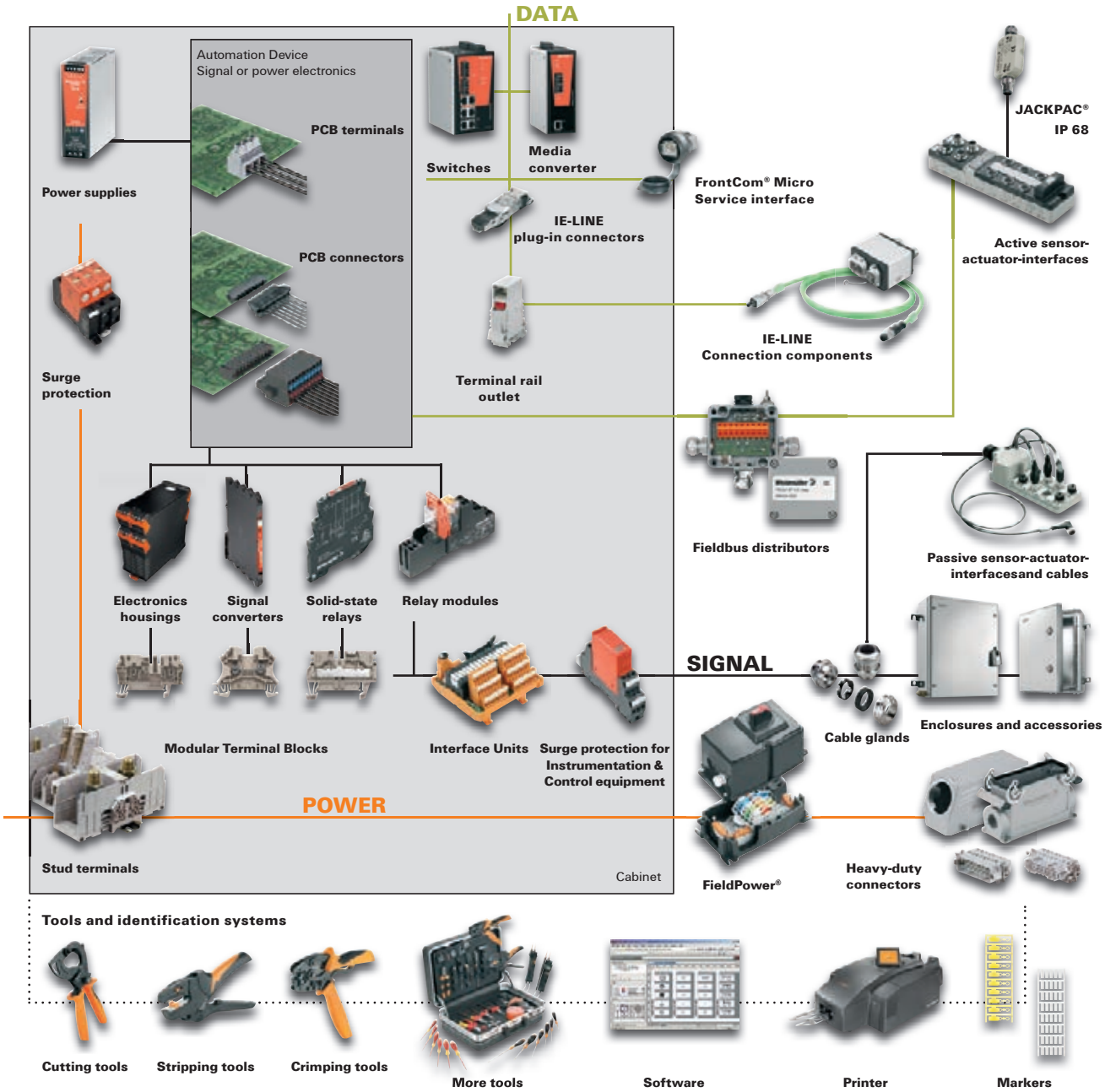

# Dear Customers,

The PDF versions of our catalogues offer practical additional functions, helping you to find your way around our product range and simplifying the ordering process.

In addition to the catalogue, the PDF also contains:

- Internal page links
- Links to the online catalogue

Try it out for yourself. Click the order number to obtain more detailed information and close-up images via you web browser. The links in the PDF file also enable you to go directly to the next desired catalogue page.

## Further Weidmüller product catalogues can be accessed by clicking the following:

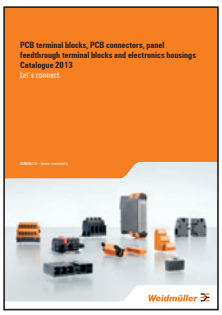

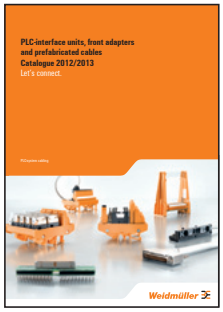


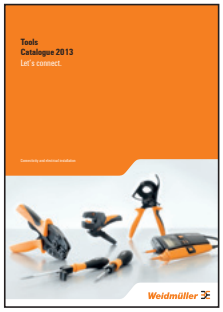

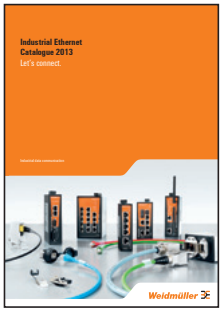

# Enclosures and Cable Glands
## Catalogue 5


**Enclosures and Cable Glands**

Introduction

Enclosures

Cable entries

Cable entry system

Tools

**Appendix**

**Weidmüller Solutions & Service**

**Technical appendix**

**Index** — Search according to type or order number, Addresses worldwide

# Enclosures and Cable Glands

**Enclosure overview, introduction**
Page B.2

**Klippon® TB MH**
Page B.15

**Klippon® TB QL**
Page B.41

**Klippon® TB FS**
Page B.67

NEW

**Klippon® TBi QL**
Page B.93

NEW

**Klippon® TBi FS**
Page B.107

NEW

**Klippon® STB**
Page B.120

**Klippon® K**
Page B.130

**Klippon® POK**
Page B.166

**TBF Range**
Page B.194

**MPC Range**
Page B.202

**FPC Range**
Page B.209

**Standard cable glands - Plastic**
Page C.6

**Standard cable glands - Brass**
Page C.9

**Cable glands for HDC RockStar®**
Page C.14

**EMC cable glands**
Page C.15

**Cable glands - stainless steel**
Page C.17

**Klippon® cable glands**
Page C.30

**Accessories - Lock nuts**
Page C.46

**Accessories - IP washer**
Page C.51

**Accessories - Shrouds**
Page C.57

**Sealing plugs**
Page C.60

**Adaptors**
Page C.67

**Compensating elements**
Page C.69

# Enclosures and Cable Glands

**Cable entry system - Cabtite**
Page D.2

**Tools**
Page E.2

# Enclosures and Cable Glands

**Enclosures and Cable Glands** Introduction A.2

# Klippon® – Proven over the years

The Klippon® brand has long stood for competence and quality in enclosures – in particular for industrial standard applications and for applications in explosive and harsh environments. Klippon® is a trademark of the Weidmüller Group, which operates worldwide in 70 countries through its sales offices, production facilities and sales agencies.

Weidmüller had already started producing enclosures in the 1960s. Weidmüller has demonstrated its reputation as a competent and reliable partner innumerable times. Weidmüller's name has stood for innovative products that can cope with even the most demanding market needs since then.

Weidmüller meets these requirements with a range of steel enclosures from the Klippon® TB range, available in Multi-Hinge (MH), Quarter-Lock (QL) and Fixing-Screw (FS) versions, and from the new Klippon® TBi range, available in Quarter-Lock (QL) and Fixing-Screw (FS) versions, as well as the Klippon® STB range and the aluminium enclosures of the Klippon® K range. The portfolio is complimented by the polyester enclosures of the Klippon® POK range and polycarbonate enclosures. In addition, a wide range of different accessories are available including cable glands, sealing plugs, adaptors, pressure compensation elements, etc. Regardless of the application being designed, Weidmüller offers many customised enclosure and individually tailored services to its customers. These include turnkey enclosure solutions with customer specific configurations (such as mounting rails, drilled holes, cable glands, cut-outs, special coatings, etc.).

*Additional information can be found in Section W – Technical Appendix.*

# Harmonisation – the key to market success!

Weidmüller's products and services meet not only its own internal high standards, but also international quality and safety standards. The Klippon® TB enclosure range is one of the first products to be approved and certified as being compliant with IEC /EN 60079. This range of standards provides a harmonised approach to the development and manufacture of equipment for use in potentially explosive atmospheres.

Weidmüller enclosures are specially tailored to meet the ever changing and extremely harsh environments of these industries. Certified in accordance with international standards, they also meet the new ATEX and IECEx regulations for potentially explosive atmospheres and have further certifications for use in standard industrial applications. You can find innovative solutions from Weidmüller everywhere; from power distribution or control and monitoring systems in boiler and turbine control systems, in fuel management and combustion control systems, or in transmission and distribution applications.

**Experts in EX for application-specific solutions**

Weidmüller's Customer-specific Solutions division offers application-specific EX solutions. Our competent team is here to take care of each individual customer requirement.

Special measures must be taken to guarantee employee health and safety in explosive hazard areas. This is regulated by the ATEX European Community directives 1999/92/EC and 94/9/EC, which classify the various areas of danger and associated selection of explosion-protected equipment into zones.

Weidmüller's customer-specific production is monitored by a notified body in accordance with European regulations. It meets all the requirements of the IECEx scheme for equipment based on the standards of the International Electrotechnical Commission.

*More on this can be found in chapter W - Technical Appendix.*

# When quality is the key

Weidmüller's enclosures are often used in harsh environments. They remain reliable for many years thanks to the high quality levels, even when exposed to external influences like water, dust, hard impacts, shock, vibration, corrosion, and extreme temperature fluctuations.

All components used in potentially explosive atmospheres are subject to strict safety regulations and are checked to the finest detail in terms of their functionality as well as their resistance and resilience against the prevailing environmental conditions.

As each enclosure is only as strong as its weakest point, Weidmüller consistently ensures that each individual component is of the highest quality and that it will not therefore cause a weak point in the enclosure. Evidence of this high quality and the functionality of the enclosure is provided by our own laboratory following intensive and careful testing to the international standards.

**IP protection class testing**

The most important function of an enclosure is to protect the internal components from external influences like moisture or dust.

Enclosures are therefore classified in terms of IP (Ingress Protection) protection classes. To certify this, the enclosures are tested in line with DIN EN 60529 in an accredited Weidmüller laboratory.

Further tests are carried out in our accredited laboratory:

- Impact resistance testing (IK number)
- Shock and vibration test
- Salt spray test (proof of corrosion resistance)
- Long-term testing in accordance with IECEx
  – Heat resistance
  – Cold resistance
- Computer tomography (CT)

# Application specific solutions – your requirements are our motivation

Each branch has its own specific requirements and increasingly need individual solutions in addition to our standard product range. Many applications are subject to high levels of mechanical stress, for example due to vibrations or direct forces. Extreme temperature conditions or use in potentially explosive atmospheres are additional factors which the enclosure must be designed to cope with. Weidmüller provides competent and goal-oriented support to assist in the choice of the optimum product for every application.

Be it individual product development, customer specific assembly or ready-made application-specific products, Weidmüller helps to optimise work sequences with the perfect product solution. This ensures cost effectiveness for our customers not just today, but also enduring into the future.

# Customer-specific assembly

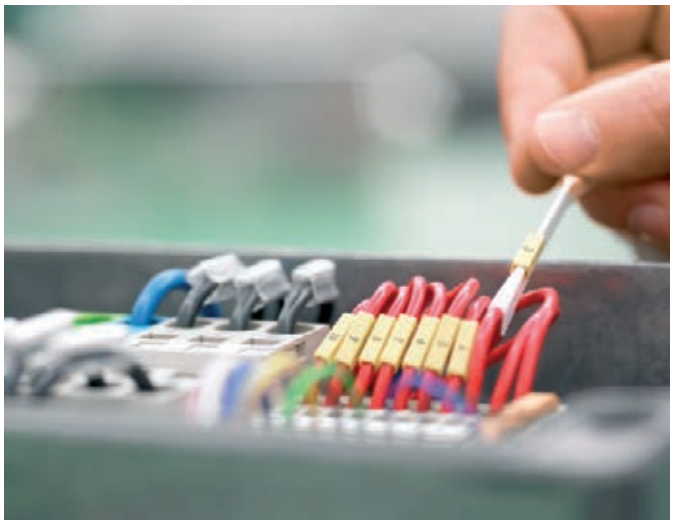

**Product consulting, development and manufacture – all from a single source**

Weidmüller is a reliable partner; we tailor-make individual enclosure solutions intelligently which meet the needs of our customers. Customer costs are reduced, efficiency increased and the customer can concentrate fully on their core business. Weidmüller has the application knowledge and the capacity to provide these tailor-made solutions quickly, flexibly and economically. Weidmüller forms a partnership with its customers, providing advice and always being on-hand to deal with any questions. When it comes to designing the task, we do so together. In the larger process, Weidmüller can choose from its wide product range to provide the ideal components to allow the appropriate solution to be set up.

# Highest level manufacturing expertise

Weidmüller is globally known for its high quality enclosures. To guarantee these high quality standards only the highest quality materials were used for the production of the new Klippon® TB range. Their production was done using state of the art techniques.

High quality Klippon® TB enclosures are manufactured in nine steps:

- Fully automated laser cutting
- Computer-aided bending
- Process-safe welding
- Innovative welding of the female threaded sockets
- Surface treatment (electropolishing)
- Sealing gasket cutting
- Final assembly
- In-process quality controls
- Innovative packaging

*More information online at:*
**www.klippontb.com**

# Enclosures


| | | |
|---|---|---|
| **Enclosures** | Introduction | B.2 |
| | Klippon® TB MH - Multi Hinge - Steel enclosures | B.12 |
| | Klippon® TB QL - Quarter Lock - Steel enclosures | B.38 |
| | Klippon® TB FS - Fixing Screw - Steel enclosures | B.64 |
| | Klippon® TBi QL - Quarter Lock - Steel enclosures | B.90 |
| | Klippon® TBi FS - Fixing Screw - Steel enclosures | B.104 |
| | Klippon® STB - Steel - enclosures | B.118 |
| | Klippon® K - Aluminium enclosures | B.128 |
| | Klippon® K - Distribution boxes Aluminium | B.150 |
| | Klippon® POK - Polyester enclosures | B.164 |
| | Klippon® POK - Distribution boxes Polyester | B.184 |
| | TBF - Polyester enclosures | B.192 |
| | MPC - Polycarbonate enclosures | B.200 |
| | FPC - Polycarbonate enclosures | B.208 |

# Metal enclosures

| | Klippon® TB MH | Klippon® TB QL | Klippon® TB FS | Klippon® TBi QL |
|---|---|---|---|---|
| | Ex | Ex | Ex | |
| Material | Stainless steel | Stainless steel | Stainless steel | Stainless steel |
| Material Specification | Stainless steel 1.4404 (316L) 1.50 mm | Stainless steel 1.4404 (316L), enclosure 1.50 mm | Stainless steel 1.4404 (316L), enclosure 1.50 mm | Stainless steel 1.4301 (304), enclosure 1.50 mm |
| Sea water resistance | very good | very good | very good | very good |
| UV resistance | very good | very good | very good | very good |
| Halogen free / cadmium free | x / x | x / x | x / x | x / x |
| Surface finish | electropolished | electropolished | electropolished | electropolished |
| Intended use | Explosive hazard areas, offshore, oil and gas industry, chemical industry, process industry | Explosive hazard areas, offshore, oil and gas industry, chemical industry, process industry | Explosive hazard areas, offshore, oil and gas industry, chemical industry, process industry | Machine construction, transport, power |
| **Dimensions** | | | | |
| L x W x H (min.) in mm | 229x152x133 | 229x152x133 | 229x152x133 | 300x200x150 |
| L x W x H (max) in mm | 987x740x200 | 987x740x200 | 987x740x200 | 800x600x220 |
| Geometry | 3 standard depths | 3 standard depths | 3 standard depths | 2 standard depths |
| **Specific characteristics** | | | | |
| Gland plates | 0,1,2,3,4 | 0,1,2,3,4 | 0,1,2,3,4 | 0,1 |
| Type of gasket | Flat gasket | Flat gasket | Flat gasket | Flat gasket |
| Seal material | Silicone | Silicone | Silicone | Neoprene |
| Enclosure attachment | 4 mounting feet with 11 mm hole size | 4 mounting feet with 11 mm hole size | 4 mounting feet with 11 mm hole size | Direct mounting (11 mm mounting holes on rear wall) or via mounting feet (optionally available) |
| Installation mounting | 4 or 6 mounting bolts with M6 threaded holes | 4 or 6 mounting bolts with M6 threaded holes | 4 or 6 mounting bolts with M6 threaded holes | Welded mounting bracket |
| Temperature range | -60 °C...+135 °C | -60 °C...+135 °C | -60 °C...+135 °C | -40 °C...+85 °C |
| Impact resistance | 10 J Industrial applications 7 J ATEX applications | 10 J Industrial applications 7 J ATEX applications | 10 J Industrial applications 7 J ATEX applications | 10 J Industrial applications |
| IP - protection class | IP 66, IP 67 / | IP 66 / | IP 66, IP 67 / | IP 66 / |
| NEMA protection class | Nema 3, Nema 4x, Nema 12 | Nema 3, Nema 4x, Nema 12 | Nema 3, Nema 4x, Nema 12 | Nema 3, Nema 4x, Nema 5 |
| Flammability rating | | | | |
| Surface resistance (in ohms) | | | | |
| **Approvals** | | | | |
| ATEX | x | x | x | |
| EN 60079-7 Increased safety | x | x | x | |
| EN 60079-11 Intrinsic safety | x | x | x | |
| EN 60079-31 Dust ignition protection | x | x | x | |
| IEC Ex | x | x | x | |
| IEC60079-7 Increased safety | x | x | x | |
| IEC60079-11 Intrinsic safety | x | x | x | |
| EN 60079-31 Dust ignition protection | x | x | x | |
| RMR / LR / GL | x / - / x | x / - / x | x / - / x | - / - / x |
| GOST Ex | x | x | x | |
| cULus | x | x | x | x |
| CCOE / INMETRO | x / * | - / * | x / * | |
| AEX | * | * | * | |
| **Configuration** | | | | |
| | Lid hinges<br>Removable lid<br>Gland plates<br>Welded mounting feet<br>Fitting for a padlock | Lid hinges<br>Gland plates<br>Welded mounting feet<br>Quarter lock | Removable lid<br>Gland plates<br>Welded mounting feet | Lid hinges<br>Gland plates<br>Direct mounting, Optional mounting feet<br>Quarter lock |

* Approvals are pending

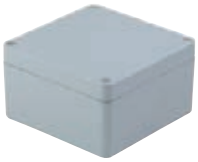

| | Klippon® TBi FS | Klippon® STB | | Klippon® K | |
|---|---|---|---|---|---|
| | | Ex | | Ex | |
| Material | Stainless steel | Stainless steel | Sheet steel | Aluminium | |
| Material Specification | Stainless steel 1.4301 (304), enclosure 1.50 mm | Stainless steel 1.4404 (316L) 1.50 mm | Powder-coated steel sheet 1.0330 | High quality aluminium alloy (Al-Si12) | |
| Sea water resistance | very good | very good | good | good | |
| UV resistance | very good | very good | insufficient | very good | |
| Halogen free / cadmium free | x / x | x / x | x / x | x / x | |
| Surface finish | electropolished | electropolished, Mirror-polish | powder-coated | neutral, powder-coated | |
| Intended use | Machine construction, transport, power | Ex areas, packing industry, railways, shipping, process industry | Packing industry, railways, shipping, process industry | Ex-areas, process industry, transport, railways, shipping, port facilities, packaging, mechanical engineering | |
| **Dimensions** | | | | | |
| L x W x H (min.) in mm | 300x200x150 | 120x120x80 | | 50x45x30 | |
| L x W x H (max) in mm | 800x600x220 | 250x400x130 | | 230x280x111 | |
| Geometry | 2 standard depths | 5 standard depths | | 11 standard depths | |
| **Specific characteristics** | | **Ex-version** | **Industrial version** | **Ex-version** | **Industrial version** |
| Gland plates | 0,1 | none | none | none | none |
| Type of gasket | Flat gasket | Flat gasket | Flat gasket | Shaped gasket | Shaped gasket |
| Seal material | Neoprene | Silicone | Silicone | Silicone | Chloroprene, Silicone |
| Enclosure attachment | Direct mounting (11 mm mounting holes on rear wall) or via mounting feet (optionally available) | External holders with 8 mm holes | External holders with 8 mm holes | 4 holes for M4 to M6 screws | 4 holes for M4 to M6 screws |
| Installation mounting | Welded mounting bracket | 20 mm C-rail welded to the enclosure | 20 mm C-rail welded to the enclosure | M4 to M6 threaded holes | M4 to M6 threaded holes |
| Temperature range | -40 °C...+85 °C | -60 °C...100 °C | -60 °C...120 °C | -50 °C...135 °C | -40 °C...+80 °C (CR); -50 °C...+135 °C (VMQ) |
| Impact resistance | 10 J Industrial applications | 7 J | 10 J | 7 J | 10 J |
| IP - protection class<br>NEMA protection class | IP 66 /<br>Nema 3, Nema 4x, Nema 5 | IP 66 | IP 66 | IP 66, IP 67 /<br>Nema 4x | IP 66, IP 67, IP 68 /<br>Nema 4x |
| Flammability rating | | | | | |
| Surface resistance (in ohms) | | | | | |
| **Approvals** | | | | | |
| ATEX | | x | | x | |
| EN 60079-7 Increased safety | | x | | x | |
| EN 60079-11 Intrinsic safety | | x | | x | |
| EN 60079-31 Dust ignition protection | | x | | x | |
| IEC Ex | | x | | x | |
| IEC60079-7 Increased safety | | x | | x | |
| IEC60079-11 Intrinsic safety | | x | | x | |
| EN 60079-31 Dust ignition protection | | x | | x | |
| RMR / LR / GL | - / - / x | - / x / x | - / x / - | x / - / x | x / - / x |
| GOST Ex | | x | | x | |
| cULus | x | x | | | x |
| CCOE / INMETRO | | - / * | | | |
| AEX | | * | | | |
| **Configuration** | | | | | |
| | Removable lid<br>Gland plates<br>Direct mounting, Optional mounting feet | TAS 20 C-profile rail<br>Welded mounting feet<br>Earth studs in enclosure lid and base | | Internal earthing screw in the enclosure base an external earth stud | internal earthing screw in the enclosure base |

* Approvals are pending

# Plastic enclosures

| | Klippon® POK | | TBF | MPC | FPC |
|---|---|---|---|---|---|
| | Ex | | | | |
| Material | Polyester | | Polyester | Polycarbonate | Polycarbonate |
| Material Specification | Glass-fibre reinforced polyester in accordance with DIN 16913 | | Glass-fibre reinforced polyester, polycarbonate transparent cover | | |
| Sea water resistance | very good | | very good | very good | very good |
| UV resistance | good | | good | good | good |
| Halogen free / cadmium free | x / x | | x / x | x / x | x / x |
| Surface finish | Grey (industrial version), Black (Ex version) | | grey | grey | grey |
| Intended use | Ex-areas, energy production, transportation, process industries, port facilities | | Building installation, transportation, energy production, building sites, manufacturing industry, packaging industry | Building installation, transportation, energy production, building sites, manufacturing industry, packaging industry | Building installation, transportation, energy production, building sites, manufacturing industry, packaging industry |
| **Dimensions** | | | | | |
| L x W x H (min.) in mm | 75x80x55 | | 186x151x139 | 125x75x75 | 200x200x130 |
| L x W x H (min.) in mm | 250x400x160 | | 603x603x175/210 | 250x175x150 | 600x400x130 |
| Geometry | 6 standard depths | | 3 standard depths | 4 standard depths | 1 standard depth |
| **Specific characteristics** | **Ex version (Black)** | **Industrial version (grey)** | | | |
| Gland plates | none | none | none | none | none |
| Type of gasket | Sealing | Sealing | O-ring | Foam seal | Foam seal |
| Seal material | Silicone | Chloroprene | Polyurethane | Polyurethane | Polyurethane |
| Enclosure attachment | 4 holes for M4 to M6 screws | 4 holes for M4 to M6 screws | 4 holes or external mounting brackets (accessory) | 4 holes or external mounting brackets (accessory) | 4 holes or external mounting brackets (accessory) |
| Installation mounting | M4 to M6 threaded holes | M4 to M6 threaded holes | 4 or 6 clamping screws M4 | Self-tapping screws | Self-tapping screws |
| Temperature range | -55 °C...+100 °C | -40 °C...+100 °C | -50 °C...+150 °C (grey); -50 °C...+130 °C (transparent) | -50 °C...+130 °C | -50 °C...+130 °C |
| Impact resistance | 7 J | 7 J | 4 J (grey lid) 7 J (transparent lid) | 7J | 7J |
| IP - protection class | IP 66 | IP 66 | IP 66 (transparent lid) IP 67 (grey lid) | IP 66, IP 67 | IP 66, IP 67 |
| Flammability rating | UL94 V0 | UL94 V0 | UL94 HB (grey), V2 (transparent) | V2 | V2 |
| Surface resistance (in ohms) | $<10^9$ | $10^{12}$ | $10^{12}$ | $10^{16}$ | $10^{16}$ |
| **Approvals** | | | | | |
| ATEX | x | | | | |
| EN 60079-7 Increased safety | x | | | | |
| EN 60079-11 Intrinsic safety | x | | | | |
| EN 60079-31 Dust ignition protection | x | | | | |
| IEC Ex | | | | | |
| IEC60079-7 Increased safety | | | | | |
| IEC60079-11 Intrinsic safety | | | | | |
| EN 60079-31 Dust ignition protection | | | | | |
| RMR / LR / GL | x / – / – | x / x / – | | | |
| GOST Ex | x | | | | |
| cULus | | x | | | |
| CCOE / INMETRO | | | | | |
| AEX | | | | | |
| **Configuration** | | | | | |
| | Fastening screws for the mounting plate | | grey or transparent lid | grey or transparent lid | grey or transparent lid |

* Approvals are pending

# Overview of dimensions

## Klippon® TB MH – Multi Hinge / Klippon® TB QL – Quarter Lock / Klippon® TB FS – Fixing Screw

Page B.12

| | Dimensions in mm Height x width x depth | Weight [g] 1 Gland plate | 2 Gland plates | 3 Gland plates | 4 Gland plates |
|---|---|---|---|---|---|
| Klippon® TB MH | 229 x 152 x 133 | 3060 | 3360 | 3740 | 4060 |
| Klippon® TB QL | | 3060 | 3360 | 3740 | 4060 |
| Klippon® TB FS | | 3754 | 2988 | 3429 | 3816 |
| Klippon® TB MH | 260 x 260 x 150 | 4840 | 5510 | 5780 | 6680 |
| Klippon® TB QL | | 4840 | 5510 | 5780 | 6680 |
| Klippon® TB FS | | 4320 | 4959 | 5148 | 6012 |
| Klippon® TB MH | 260 x 260 x 200 | 5620 | 6400 | 6840 | 8200 |
| Klippon® TB QL | | 5620 | 6400 | 6840 | 8200 |
| Klippon® TB FS | | 4950 | 5760 | 6570 | 7380 |
| Klippon® TB MH | 306 x 306 x 150 | 5960 | 6580 | 7060 | 7660 |
| Klippon® TB QL | | 5960 | 6580 | 7060 | 7660 |
| Klippon® TB FS | | 4860 | 5670 | 6300 | 6930 |
| Klippon® TB MH | 306 x 306 x 200 | 6800 | 7720 | 8320 | 9180 |
| Klippon® TB QL | | 6800 | 7720 | 8320 | 9180 |
| Klippon® TB FS | | 6120 | 6570 | 7470 | 8379 |
| Klippon® TB MH | 350 x 260 x 150 | 5780 | 6700 | 7600 | 9700 |
| Klippon® TB QL | | 5780 | 6700 | 7600 | 9700 |
| Klippon® TB FS | | 5400 | 6030 | 6840 | 8730 |
| Klippon® TB MH | 350 x 260 x 200 | 6700 | 7700 | 8380 | 10100 |
| Klippon® TB QL | | 6700 | 7700 | 8380 | 10100 |
| Klippon® TB FS | | 6030 | 6930 | 8010 | 9090 |
| Klippon® TB MH | 400 x 300 x 150 | 7200 | 8300 | 8380 | 11100 |
| Klippon® TB QL | | 7200 | 8300 | 8380 | 11100 |
| Klippon® TB FS | | 6480 | 7470 | 8730 | 9990 |
| Klippon® TB MH | 400 x 300 x 200 | 7900 | 9200 | 10400 | 11300 |
| Klippon® TB QL | | 7900 | 9200 | 10400 | 11300 |
| Klippon® TB FS | | 7290 | 8280 | 9360 | 10170 |
| Klippon® TB MH | 458 x 382 x 150 | 9000 | 9900 | 10700 | 12700 |
| Klippon® TB QL | | 9000 | 9900 | 10700 | 12700 |
| Klippon® TB FS | | 7650 | 8910 | 10170 | 11430 |
| Klippon® TB MH | 458 x 382 x 200 | 10240 | 10830 | 12500 | 14110 |
| Klippon® TB QL | | 10240 | 10830 | 12500 | 14110 |
| Klippon® TB FS | | 8460 | 9747 | 11250 | 12699 |
| Klippon® TB MH | 480 x 480 x 150 | 11900 | 13800 | 15200 | 17600 |
| Klippon® TB QL | | 11900 | 13800 | 15200 | 17600 |
| Klippon® TB FS | | 10710 | 12420 | 13680 | 15840 |
| Klippon® TB MH | 480 x 480 x 200 | 12420 | 15900 | 17700 | 16080 |
| Klippon® TB QL | | 12420 | 15900 | 17700 | 16080 |
| Klippon® TB FS | | 12600 | 14310 | 15930 | 17550 |
| Klippon® TB MH | 550 x 350 x 150 | 8500 | 9500 | 10800 | 12100 |
| Klippon® TB QL | | 8500 | 9500 | 10800 | 12100 |
| Klippon® TB FS | | 7650 | 8550 | 9720 | 10890 |
| Klippon® TB MH | 550 x 350 x 200 | 11060 | 11500 | 13800 | 14720 |
| Klippon® TB QL | | 11060 | 11500 | 13800 | 14720 |
| Klippon® TB FS | | 9090 | 10350 | 12150 | 13950 |
| Klippon® TB MH | 620 x 450 x 150 | 12800 | 14100 | 15600 | 17100 |
| Klippon® TB QL | | 12800 | 14100 | 15600 | 17100 |
| Klippon® TB FS | | 11520 | 12690 | 14040 | 15390 |
| Klippon® TB MH | 620 x 450 x 200 | 14240 | 15830 | 17360 | 20350 |
| Klippon® TB QL | | 14240 | 15830 | 17360 | 20350 |
| Klippon® TB FS | | 12654 | 14247 | 16281 | 18315 |
| Klippon® TB MH | 762 x 508 x 150 | 17100 | 18600 | 19700 | 20800 |
| Klippon® TB QL | | 17100 | 18600 | 19700 | 20800 |
| Klippon® TB FS | | 15390 | 16740 | 17730 | 18720 |
| Klippon® TB MH | 762 x 508 x 200 | 18120 | 19800 | 21200 | 22700 |
| Klippon® TB QL | | 18120 | 19800 | 21200 | 22700 |
| Klippon® TB FS | | 16020 | 17820 | 19080 | 20430 |

**Note** Additional enclosure sizes available on request. The weights given are net weights. Enclosures without gland plates are available on request.

## Klippon® TB MH – Multi Hinge / Klippon® TB QL – Quarter Lock / Klippon® TB FS – Fixing Screw

Page B.12

| | Dimensions in mm Height x width x depth | Weight [g] | | | |
|---|---|---|---|---|---|
| | | 1 Gland plate | 2 Gland plates | 3 Gland plates | 4 Gland plates |
| Klippon® TB MH | 914 x 610 x 150 | 20700 | 22200 | 24100 | 26000 |
| Klippon® TB QL | | 20700 | 22200 | 24100 | 26000 |
| Klippon® TB FS | | 18630 | 19980 | 21690 | 23400 |
| Klippon® TB MH | 914 x 610 x 200 | 23840 | 24600 | 26400 | 28200 |
| Klippon® TB QL | | 23840 | 24600 | 26400 | 28200 |
| Klippon® TB FS | | 19890 | 22140 | 23760 | 25380 |
| Klippon® TB MH | 980 x 740 x 200 | 34800 | 36300 | 36100 | 39900 |
| Klippon® TB QL | | 34800 | 36300 | 36100 | 39900 |
| Klippon® TB FS | | 31320 | 32670 | 34200 | 35910 |
| **Note** | Additional enclosure sizes available on request. The weights given are net weights. Enclosures without gland plates are available on request. | | | | |

## Klippon® TBi FS - Fixing Screw / Klippon® TBi QL - Quarter Lock

Page B.12

| | Dimensions in mm Height x width x depth | Weight [g] | |
|---|---|---|---|
| | | 0 Gland plates | 1 Gland plate |
| Klippon® TBi QL | 300 x 200 x 150 | 3871.1 | 3432.1 |
| Klippon® TBi FS | | 4454 | 5220 |
| Klippon® TBi QL | 300 x 300 x 150 | 4768.1 | 6700 |
| Klippon® TBi FS | | 5719.6 | 5493.9 |
| Klippon® TBi QL | 300 x 300 x 220 | 5768.7 | 5320.7 |
| Klippon® TBi FS | | 7451.8 | 7036.8 |
| Klippon® TBi QL | 400 x 300 x 150 | 5943.9 | 6503.9 |
| Klippon® TBi FS | | 6980 | 6754.3 |
| Klippon® TBi QL | 400 x 300 x 220 | 7111.5 | 6655.5 |
| Klippon® TBi FS | | 8927.1 | 8519.4 |
| Klippon® TBi QL | 400 x 400 x 220 | 8696.5 | 8072.5 |
| Klippon® TBi FS | | 10653.6 | 10085.7 |
| Klippon® TBi QL | 500 x 400 x 220 | 10279.3 | 9647.3 |
| Klippon® TBi FS | | 12482.9 | 11915.1 |
| Klippon® TBi QL | 500 x 500 x 220 | 12920.3 | 11264.3 |
| Klippon® TBi FS | | 14571.8 | 13829.2 |
| Klippon® TBi QL | 600 x 400 x 220 | 11872.1 | 11240.1 |
| Klippon® TBi FS | | 14239.5 | 13664.4 |
| Klippon® TBi QL | 600 x 600 x 220 | 15992.1 | |
| Klippon® TBi FS | | 18842.4 | 17947 |
| Klippon® TBi QL | 800 x 600 x 200 | 20127.7 | 19143.7 |
| Klippon® TBi FS | | 23349.7 | 22440 |
| **Note** | Additional enclosure sizes available on request. The weights given are net weights. Enclosures without gland plates are available on request. | | |

# Overview of dimensions

## Klippon® STB

Page B.118

| | Dimensions in mm Height x width x depth | Weight [g] |
|---|---|---|
| 1.4404 (316L), mirror polished | **120 x 120 x 80** | 1250 |
| 1.4404 (316L), electropolished | | 1220 |
| MS RAL 7032 | | 1277 |
| 1.4404 (316L), mirror polished | **150 x 120 x 80** | 1451 |
| 1.4404 (316L), electropolished | | 1380 |
| MS RAL 7032 | | 1380 |
| 1.4404 (316L), mirror polished | **150 x 150 x 90** | 1708 |
| 1.4404 (316L), electropolished | | 1734 |
| MS RAL 7032 | | 1765 |
| 1.4404 (316L), mirror polished | **190 x 150 x 90** | 2006 |
| 1.4404 (316L), electropolished | | 2080 |
| MS RAL 7032 | | 2081 |
| 1.4404 (316L), mirror polished | **190 x 190 x 100** | 2433 |
| 1.4404 (316L), electropolished | | 2407 |
| MS RAL 7032 | | 2468 |
| 1.4404 (316L), mirror polished | **250 x 250 x 120** | 3912 |
| 1.4404 (316L), electropolished | | 3850 |
| MS RAL 7032 | | 4013 |
| 1.4404 (316L), mirror polished | **160 x 380 x 120** | 3961 |
| 1.4404 (316L), electropolished | | 3960 |
| MS RAL 7032 | | 3974 |
| 1.4404 (316L), mirror polished | **250 x 400 x 130** | 5714 |
| 1.4404 (316L), electropolished | | 5700 |
| MS RAL 7032 | | 5859 |

The weights given are net weights. MS: Mild steel, Stainless steel 1.4404 (316L).

## Klippon® K

Page B.128

| | Dimensions in mm Height x width x depth | Weight [g] |
|---|---|---|
| unpainted Ex (S) | **45 x 50 x 30** | 89 |
| unpainted (CR) | | 78.4 |
| RAL 7001 (CR) | | 79.2 |
| RAL 7001 (S) | | 83.6 |
| unpainted Ex (S) | **64 x 58 x 34** | 184 |
| unpainted (CR) | | 148.1 |
| RAL 7001 (CR) | | 153.6 |
| RAL 7001 (S) | | 149.4 |
| unpainted Ex (S) | **64 x 98 x 34** | 254 |
| unpainted (CR) | | 207 |
| RAL 7001 (CR) | | 211.2 |
| RAL 7001 (S) | | 217 |
| unpainted Ex (S) | **70 x 70 x 45** | 272 |
| unpainted (CR) | | 247.5 |
| RAL 7001 (CR) | | 251.5 |
| RAL 7001 (S) | | 255.9 |
| unpainted Ex (S) | **80 x 75 x 57** | 328 |
| unpainted (CR) | | 318 |
| RAL 7001 (CR) | | 322 |
| RAL 7001 (S) | | 319.6 |
| unpainted Ex (S) | **70 x 100 x 45** | 319 |
| unpainted (CR) | | 314.4 |
| RAL 7001 (CR) | | 309.9 |
| RAL 7001 (S) | | 316 |

The weights given are net weights.

## Klippon® K

Page B.128

| | Dimensions in mm Height x width x depth | Weight [g] |
|---|---|---|
| unpainted Ex (S) | **80 x 125 x 57** | 472 |
| unpainted (CR) | | 446 |
| RAL 7001 (CR) | | 466 |
| RAL 7001 (S) | | 471 |
| unpainted Ex (S) | **70 x 165 x 45** | 500 |
| unpainted (CR) | | 454.6 |
| RAL 7001 (CR) | | 452 |
| RAL 7001 (S) | | 469.2 |
| unpainted Ex (S) | **80 x 175 x 57** | 600 |
| unpainted (CR) | | 569.6 |
| RAL 7001 (CR) | | 576.6 |
| RAL 7001 (S) | | 583.2 |
| unpainted Ex (S) | **80 x 250 x 55** | 874 |
| unpainted (CR) | | 784 |
| RAL 7001 (CR) | | 794 |
| RAL 7001 (S) | | 752.8 |
| unpainted Ex (S) | **82 x 130 x 72** | 663 |
| unpainted (CR) | | 633 |
| RAL 7001 (CR) | | 644 |
| RAL 7001 (S) | | 669 |
| unpainted Ex (S) | **120 x 122 x 81** | 986 |
| unpainted (CR) | | 935 |
| RAL 7001 (CR) | | 955 |
| RAL 7001 (S) | | 938 |
| unpainted Ex (S) | **130 x 170 x 90** | 1432 |
| unpainted (CR) | | 1386 |
| RAL 7001 (CR) | | 1420 |
| RAL 7001 (S) | | 1616 |
| unpainted Ex (S) | **120 x 220 x 81** | 1428 |
| unpainted (CR) | | 1423 |
| RAL 7001 (CR) | | 1399 |
| RAL 7001 (S) | | 1411 |
| unpainted Ex (S) | **160 x 160 x 91** | 1699 |
| unpainted (CR) | | 1676 |
| RAL 7001 (CR) | | 1613 |
| RAL 7001 (S) | | 1616 |
| unpainted Ex (S) | **160 x 200 x 100** | 1872 |
| unpainted (CR) | | 1800 |
| RAL 7001 (CR) | | 1820 |
| RAL 7001 (S) | | 2080 |
| unpainted Ex (S) | **160 x 260 x 91** | 2249 |
| unpainted (CR) | | 2160 |
| RAL 7001 (CR) | | 2240 |
| RAL 7001 (S) | | 2150 |
| unpainted Ex (S) | **160 x 350 x 100** | 2863 |
| unpainted (CR) | | 2828 |
| RAL 7001 (CR) | | 3116 |
| RAL 7001 (S) | | 3094 |
| unpainted Ex (S) | **230 x 280 x 111** | 3420 |
| unpainted (CR) | | 3377 |
| RAL 7001 (CR) | | 3395 |
| RAL 7001 (S) | | 3274 |

The weights given are net weights.

## Klippon® POK

Page B.164

| | Dimensions in mm Height x width x depth | Weight [g] |
|---|---|---|
| RAL 7001<br>RAL 9011 | **75 x 80 x 56** | 273<br>289 |
| RAL 7001<br>RAL 9011 | **75 x 110 x 55** | 345<br>350 |
| RAL 7001<br>RAL 9011 | **75 x 160 x 55** | 450<br>461 |
| RAL 7001<br>RAL 9011 | **75 x 190 x 55** | 499<br>530 |
| RAL 7001<br>RAL 9011 | **75 x 230 x 55** | 612<br>628 |
| RAL 7001<br>RAL 9011 | **120 x 122 x 91** | 768<br>769 |
| RAL 7001<br>RAL 9011 | **120 x 220 x 91** | 1094<br>1110 |
| RAL 7001<br>RAL 9011 | **160 x 160 x 91** | 1302<br>1326 |
| RAL 7001<br>RAL 9011 | **160 x 260 x 91** | 1771<br>1767 |
| RAL 7001<br>RAL 9011 | **160 x 360 x 91** | 2210<br>2291 |
| RAL 7001<br>RAL 9011 | **160 x 560 x 91** | 3327<br>3320 |
| RAL 7001<br>RAL 9011 | **250 x 255 x 121** | 2817<br>2841 |
| RAL 7001<br>RAL 9011 | **250 x 400 x 121** | 3693<br>3771 |
| RAL 7001<br>RAL 9011 | **250 x 600 x 121** | 5420<br>5580 |
| RAL 7001<br>RAL 9011 | **405 x 400 x 121** | 5740<br>5580 |
| RAL 7001<br>RAL 9011 | **250 x 255 x 161** | 3458<br>3600 |
| RAL 7001<br>RAL 9011 | **250 x 400 x 161** | 4390<br>4408 |

The weights given are net weights.

## TBF

Page B.192

| | Dimensions in mm Height x width x depth | Weight [g] |
|---|---|---|
| grey lid (RAL7035)<br>transparent lid | **186 x 151 x 140** | 1061<br>810 |
| grey lid (RAL7035)<br>transparent lid | **302 x 186 x 175** | 1857<br>1520 |
| grey lid (RAL7035)<br>transparent lid | **302 x 302 x 175** | 2420<br>2000 |
| grey lid (RAL7035)<br>transparent lid | **372 x 302 x 175** | 2829<br>2465 |
| grey lid (RAL7035)<br>transparent lid | **488 x 302 x 175**<br>**488 x 302 x 210** | 3688<br>3220 |
| grey lid (RAL7035)<br>transparent lid | **558 x 302 x 175**<br>**558 x 302 x 210** | 4420<br>3660 |
| grey lid (RAL7035)<br>transparent lid | **603 x 302 x 175**<br>**603 x 302 x 210** | 4900<br>3900 |
| grey lid (RAL7035)<br>transparent lid | **603 x 372 x 175**<br>**603 x 372 x 210** | 5000<br>5000 |

The weights given are net weights.

# Overview of dimensions

## TBF

Page B.192

| | Dimensions in mm Height x width x depth | Weight [g] |
|---|---|---|
| grey lid (RAL7035) | **603 x 605 x 175** | 7220 |
| transparent lid | **603 x 605 x 210** | 7480 |

The weights given are net weights.

## MPC

Page B.200

| | Dimensions in mm Height x width x depth | Weight [g] |
|---|---|---|
| grey lid (RAL7035) | **125 x 75 x 75** | 214 |
| transparent lid | | |
| grey lid (RAL7035) | **125 x 75 x 125** | 306 |
| transparent lid | | 304 |
| grey lid (RAL7035) | **125 x 125 x 75** | 295 |
| transparent lid | | 294 |
| grey lid (RAL7035) | **175 x 125 x 75** | 373 |
| transparent lid | | 368 |
| grey lid (RAL7035) | **175 x 125 x 100** | 464 |
| transparent lid | | 448 |
| grey lid (RAL7035) | **175 x 125 x 125** | 523 |
| transparent lid | | 525 |
| grey lid (RAL7035) | **175 x 175 x 75** | 489 |
| transparent lid | | 491 |
| grey lid (RAL7035) | **175 x 175 x 150** | 184 |
| transparent lid | | 731 |
| grey lid (RAL7035) | **250 x 175 x 100** | 760 |
| transparent lid | | 753 |

## FPC

Page B.208

| | Dimensions in mm Height x width x depth | Weight [g] |
|---|---|---|
| grey lid (RAL7035) | **200 x 200 x 132** | 1230 |
| transparent lid | | 1260 |
| grey lid (RAL7035) | **200 x 300 x 132** | 1616 |
| transparent lid | | 1589 |
| grey lid (RAL7035) | **200 x 400 x 132** | 2000 |
| transparent lid | | 1984 |
| grey lid (RAL7035) | **300 x 300 x 132** | 2097 |
| transparent lid | | 2103 |
| grey lid (RAL7035) | **300 x 400 x 132** | 2624 |
| transparent lid | | 2620 |
| grey lid (RAL7035) | **400 x 600 x 132** | 3964 |
| transparent lid | | 4500 |

The weights given are net weights.

# Drawing design – For chapter B

The drawings contained in chapter B are constructed in the following way.

To identify the enclosure side views, these are marked with the letters A, B, C, D, E, and F. The schematic 3D representations shown underneath are of an enclosure that has been wall mounted.

**F** shows the view of the enclosure lid (front aspect),
**E** shows the interior surface of the enclosure (rear wall of the enclosure with the cover removed).
**A** shows the view of the enclosure from above and
**B** the view of the enclosure from underneath.
**C** shows the left and
**D** the right side of the enclosure.
**E** is the front view of the enclosure interior with the cover removed (enclosure rear wall).

You can find the dimensions of the enclosure sides for all enclosure sizes in each drawing.

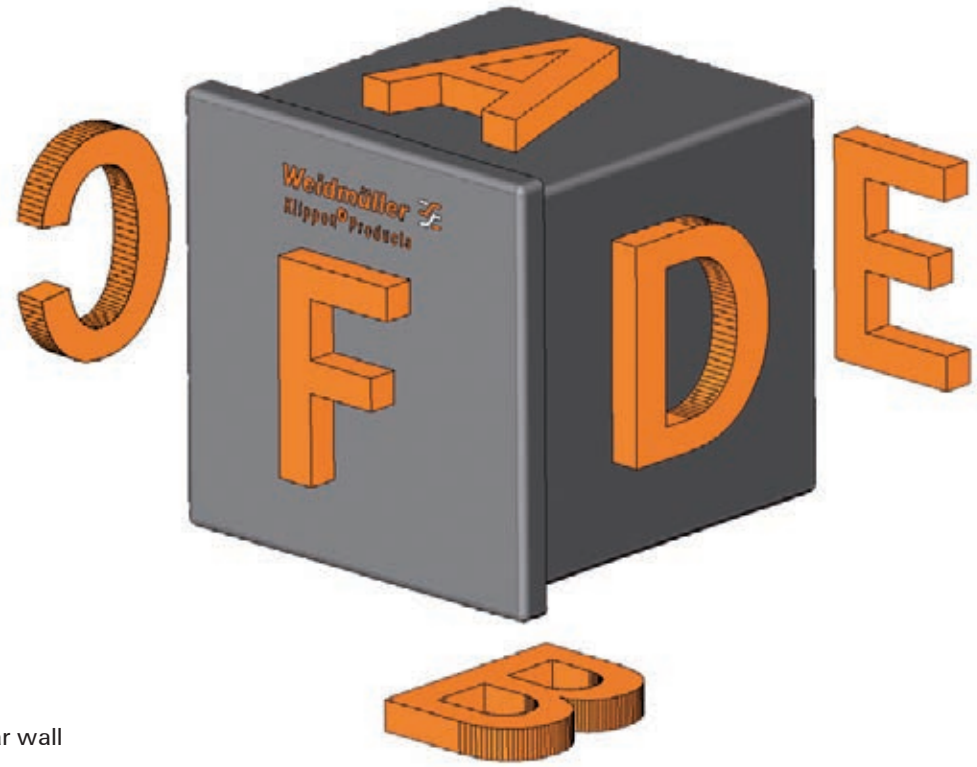


**A** = Top
**B** = Bottom
**C** = Left
**D** = Right
**E** = Enclosure rear wall
**F** = Enclosure lid

# Klippon® TB MH - Multi Hinge

**Steel enclosures**
**for use in industrial and in potentially explosive atmospheres**

The Klippon® TB enclosure range features excellent performance characteristics, even under the most difficult environmental conditions, and also comply with the stricter requirements of potentially explosive atmospheres found in the process or power generation industries. The Klippon® TB MH enclosure range offers further improvements to a product line that is already successfully leading the market.

Weidmüller can manufacture and supply this enclosure to match customer specifications and fitted with all necessary terminals and cable glands.

## Overview of enclosures

### Ordering data

| Description | Length x width x depth in mm | 1 Gland Plate (below) | 2 Gland Plates (above + below) | 3 Gland plates (below + sides) | 4 Gland plates (all sides) | Reference product |
|---|---|---|---|---|---|---|
| KTB MH 221513 S4E_* | 229 x 152 x 133 | 1194560000 | 1194570000 | 1194580000 | 1194590000 | Klippon® TB10 |
| KTB MH 262615 S4E_* | 260 x 260 x 150 | 1194610000 | 1194620000 | 1194630000 | 1194640000 | Klippon® TB10A |
| KTB MH 262620 S4E_* | 260 x 260 x 200 | 1194660000 | 1194670000 | 1194680000 | 1194690000 | Klippon® TB10A |
| KTB MH 303015 S4E_* | 306 x 306 x 150 | 1194710000 | 1194720000 | 1194730000 | 1194740000 | Klippon® TB11 |
| KTB MH 303020 S4E_* | 306 x 306 x 200 | 1194760000 | 1194770000 | 1194780000 | 1194790000 | Klippon® TB11 |
| KTB MH 352615 S4E_* | 350 x 260 x 150 | 1194810000 | 1194820000 | 1194830000 | 1194840000 | Klippon® TB11A |
| KTB MH 352620 S4E_* | 350 x 260 x 200 | 1194860000 | 1194870000 | 1194880000 | 1194890000 | Klippon® TB11A |
| KTB MH 403015 S4E_* | 400 x 300 x 150 | 1194910000 | 1194920000 | 1194930000 | 1194940000 | - |
| KTB MH 403020 S4E_* | 400 x 300 x 200 | 1194960000 | 1194970000 | 1194980000 | 1194990000 | - |
| KTB MH 453815 S4E_* | 458 x 382 x 150 | 1195010000 | 1195020000 | 1195030000 | 1195040000 | Klippon® TB12 |
| KTB MH 453820 S4E_* | 458 x 382 x 200 | 1195060000 | 1195070000 | 1195080000 | 1195090000 | Klippon® TB12 |
| KTB MH 484815 S4E_* | 480 x 480 x 150 | 1195110000 | 1195120000 | 1195130000 | 1195140000 | Klippon® TB12A |
| KTB MH 484820 S4E_* | 480 x 480 x 200 | 1195160000 | 1195170000 | 1195180000 | 1195190000 | Klippon® TB12A |
| KTB MH 553515 S4E_* | 550 x 350 x 150 | 1195210000 | 1195220000 | 1195230000 | 1195240000 | Klippon® TB12B |
| KTB MH 553520 S4E_* | 550 x 350 x 200 | 1195260000 | 1195270000 | 1195280000 | 1195290000 | Klippon® TB12B |
| KTB MH 624515 S4E_* | 620 x 450 x 150 | 1195310000 | 1195320000 | 1195330000 | 1195340000 | Klippon® TB12D |
| KTB MH 624520 S4E_* | 620 x 450 x 200 | 1195360000 | 1195370000 | 1195380000 | 1195390000 | Klippon® TB12D |
| KTB MH 765015 S4E_* | 762 x 508 x 150 | 1195410000 | 1195420000 | 1195430000 | 1195440000 | Klippon® TB13 |
| KTB MH 765020 S4E_* | 762 x 508 x 200 | 1195460000 | 1195470000 | 1195480000 | 1195490000 | Klippon® TB13 |
| KTB MH 916115 S4E_* | 914 x 610 x 150 | 1195510000 | 1195520000 | 1195530000 | 1195540000 | Klippon® TB14 |
| KTB MH 916120 S4E_* | 914 x 610 x 200 | 1195560000 | 1195570000 | 1195580000 | 1195590000 | Klippon® TB14 |
| KTB MH 987420 S4E_* | 980 x 740 x 200 | 1195610000 | 1195620000 | 1195630000 | 1195640000 | - |
| **Note** | | * Placeholder for the number of gland plates (1, 2, 3, 4). Klippon® TB MH enclosures are available without gland plates on request. | | | | |

## Technical Overview

### Features

- Available in 12 sizes and 3 standard depths
- Equipped with up to 4 gland plates
- The gasket is protected against compression
- Completely removable padlock tab
- Cover lock outside the sealed zone
- Improved temperature performance
- IP 66/IP 67 protection
- Lid can be removed without a tool
- Earth studs in enclosure cover and bottom section
- Welded mounting feet
- International approvals

**Note**

### Technical data

| | |
|---|---|
| Enclosure material*** | Stainless steel 1.4404 (316L) 1.5 mm |
| Surface finish | electropolished |
| IP protection class | IP 66 / IP 67 (IP 66 to IEC EN 60079-0) |
| NEMA protection classes | 3, 4x, 12 |
| Gland plates | 1 - 4 (fixed with M6 hexagon head screws with 10 mm heads), optionally without a gland plate |
| Gland plate thickness | 3 mm (other thickness of up to 20 mm are available on request) |
| Earthing inside | Enclosure base and lid: welded M6 stainless steel earth studs |
| Earthing outside | Continuous M10 brass earth stud (optionally with stainless-steel earth stud) |
| Installation mounting | 4 or 9 mounting bolts with M6 threaded holes to attach the mounting plate or mounting rail |
| Enclosure attachment | 4 welded mounting feet with 11-mm holes (2 slotted and 2 cross-shaped openings) |
| Lid opening | Lid can be fully removed without the use of tools, can be fitted on both sides, lid opening angle: 130° |
| Cover attachment | 4 hinges and M6 hex-head screws(AF 10) with slot |
| Equipped for a padlock | Removable padlock fitting, for additional product security with an optional padlock (article number: 0905680000) |
| Impact resistance | 7 J ATEX applications, 10 J industrial applications |
| Gasket material | Silicone |
| Operating temperature range* | -60 °C...+135 °C |
| Torque - lid and gland plate screws** | 2.5 Nm |
| **Note** | *Limited to IP 66 protection when used in temperatures greater than 105°C. ** To secure the lid, please use our hexagonal socket wrench with a 10 mm socket (9009070000) *** Painted steel enclosures are available on request. |

### Approvals for empty enclosures

| | |
|---|---|
| ATEX certificate | KEMA 10ATEX0046 U |
| ATEX marking | II 2 G Ex e IIC Gb<br>II 2 D Ex tb IIIC Db IP 66/67 |
| IECEx certificate | IECEx KEM 10.0015U |
| IECEx marking | Ex e IIC Gb<br>Ex tb IIIC Db IP 66/67 |
| GOST Ex | POCC DE.ME92.B02036 |
| cULus | E243298 |
| Germanischer Lloyd | 11533 - 10 HH |
| Russian Maritime Register | 10.04093.250 |
| CCOE | P267536/2 |
| INMETRO | In preparation |
| **Note** | The Klippon® TB MH enclosure range can be pre-fitted in our customer specific production department according to your wishes; as an example, terminals, or other approved components, can be installed as required. |

### Approvals for control and distribution box

| | |
|---|---|
| ATEX certificate | KEMA 10ATEX0050 |
| ATEX marking | II 2 G Ex eb IIC T6...T4<br>II 1 G Ex ia IIC T6...T4<br>II 2(1) G Ex eb ia IIC T6...T4<br>II 2 D Ex tb IIIC T85 °C...T135 °C IP 66/67 |
| IECEx certificate | IECEx KEM 10.0019 |
| IECEx marking | Ex eb IIC T...<br>Ex ia IIC T...<br>Ex eb ia IIC T...<br>Ex tb IIIC T85 °C...T135 °C IP 66/67 |
| **Note** | Labelling depends on the application layout. Limited to IP 66 protection when used in temperatures greater than 105 °C. |

# Integrate, expand and customise: the perfect supplement to every application

The fully structured range of system accessories for the Klippon® TB enclosure range allows you to easily adapt the enclosure to meet the specific requirements of every application.

The following options are available:

### 1 Document holder

Document holders for storage of important documents in the enclosure.

### 2 Earthing studs

Earthing studs are replaceable. Available in two versions – brass and stainless steel.

### 3 Gland plates

Gland plates are available as spares and also in various material thicknesses.

### 4 Mounting plates

Mounting plates with and without a drilling pattern, for horizontal and vertical mounting of rails, or components fitted directly.

### 5 Mounting hardware kits

Mounting hardware kits are available for quick and easy installation of label holders, mounting plates, gland plates, document holders and rain hoods.

### 6 Door stay

A door stay prevent the door from being closed unintentionally, regardless of the mounting position of the enclosure.
This item is **only** available Ex-works.

### 7 Locking systems

Various locking systems are available for the safe securing of the enclosure. There are padlocks for the Klippon® TB MH enclosures and a range of lock inserts for the Klippon® TB QL enclosures.

### 8 Type label holder

A range of label holders are available for product identification.

### 9 Rain hoods

The rain hood provides an ideal, additional level of protection for the enclosure. Particularly useful against heavy rainfall or extreme levels of direct sunlight.

## Klippon® TB MH 221513

**Depth** 133 mm

| Height/Width/Depth | 229 / 152 / 133 mm |
|---|---|

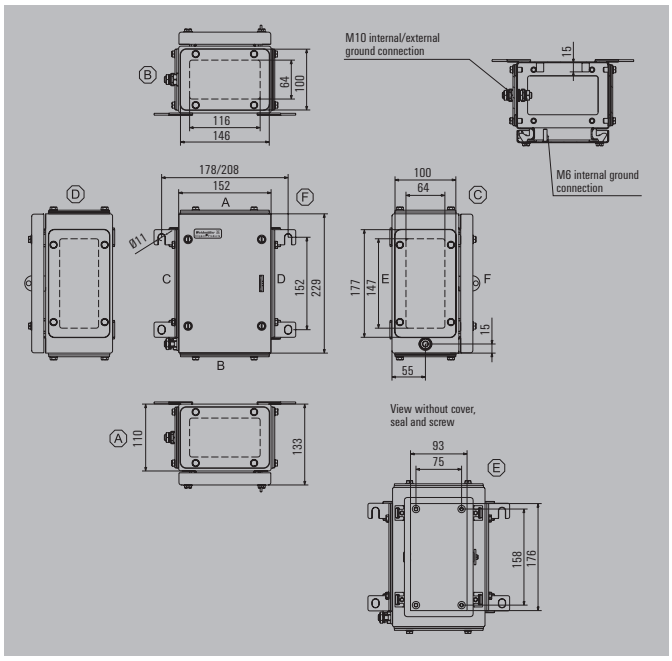


### Ordering data

| Stainless steel 1.4404 316L, electropolished | Order No. |
|---|---|
| 1 gland plate - bottom side (B) | 1194560000 |
| 2 gland plates - top and bottom sides (A & B) | 1194570000 |
| 3 gland plates - bottom, left and right sides (B, C & D) | 1194580000 |
| 4 gland plates - top, bottom, left and right sides (A, B, C & D) | 1194590000 |
| **Note** Painted sheet steel enclosure available on request. Standard colour is similar to RAL 7035. | |

### Accessories

| Mounting plates and fastening screws | Order No. |
|---|---|
| Steel sheet, zinc plated | 1193930000 |
| Stainless steel 1.4301 | 1193810000 |
| With hole pattern, natural stainless steel 1.4301 | 1257650000 |
| Fastening screws for mounting plates | 0642600000 |
| Fastening screws for terminal rails | 1274150000 |
| **Stainless steel spacer M6 x 8, Set of 4** | |
| 10 mm length | 0935110000 |
| 15 mm length | 0935120000 |
| 20 mm length | 0935130000 |
| 30 mm length | 0935140000 |
| **Gland plates and screws - 6 mm** | |
| Top and bottom sides (A & B), electropolished stainless steel 1.4404 | 1256270000 |
| Left and right sides (C & D), electropolished stainless steel 1.4404 | 1256280000 |
| Mounting screw, stainless steel 1.4404 | 1253230000 |
| **Mirror-polish Stainless steel 1.4301 rain hood (2R)** | |
| | 1281360000 |
| **Label holder** | |
| 70 x 70 angled stainless steel 1.4301 | 1279320000 |
| 130x50 stainless steel 1.4301 | 1283450000 |
| 100x25 stainless steel 1.4301 | 1257640000 |
| **Document holder** | |
| For DIN A6 size documents | |
| For DIN A5 size documents | |
| For DIN A4 size documents | |
| **Set of fixings** | |
| For label holders, rain hoods and document holders (rivet) | 1252190000 |
| For plastic (Trafolyte), identification plate (screw) | 1285200000 |
| **Earthing stud** | |
| Stainless steel 1.4404 | 1192690000 |
| **Padlock with two keys** | |
| Stainless steel 1.4301 | 0905680000 |

**Note**

### Max. number of terminals (industry)

| Max. number of terminals (industry) | vertical | horizontal |
|---|---|---|
| 2.5 mm² | 1x29 | 1x15 |
| 4 mm² | | 1x13 |
| 6 mm² | | 1x9 |
| 10 mm² | | 1x7 |
| 16 mm² | | 1x6 |
| 35 mm² | | |

**Note**

*For enclosure versions with zero, one or two gland plates, the horizontal gap between the mounting feet is reduced by 30 mm.
Assembly with terminal blocks provides for 10 mm clearance to the ends of the mounting rail.
Recommended order:
TS 35 mounting rail (screw terminal) WDU 2.5 1020000000 / (tension clamp terminal) ZDU 2.5 1608510000 / (tension clamp terminal) PDU 2.5 1896110000
TS 32 mounting rail (screw terminal) SAK 2.5 0279660000
TS 15 mounting rail (screw terminal) AKZ 2.5 0697160000

### Number of cable entries

| Number of cable entries | A / B | C / D |
|---|---|---|
| M12 | 6 | 8 |
| M16 | 5 | 6 |
| M20 | 2 | 3 |
| M25 | 2 | 2 |
| M32 | 1 | 2 |
| M40 | 1 | 2 |
| M50 | 0 | 0 |
| M63 | 0 | 0 |
| M75 | 0 | 0 |

**Note** Our IP 68 brass cable glands serve as a reference for these recommended values.

### Dimensions of mounting plate

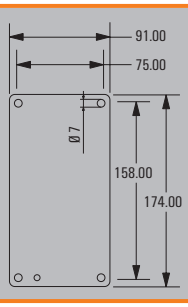

## Klippon® TB MH 262615

**Depth** 150 mm

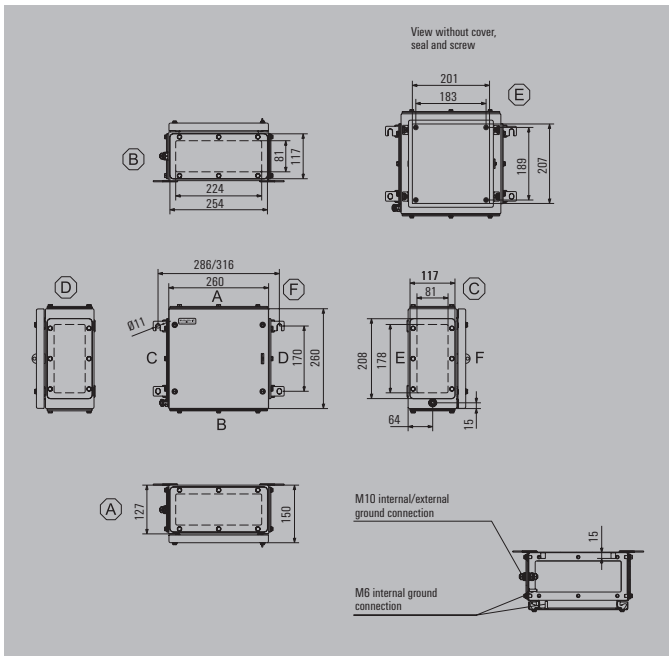


| Height/Width/Depth | 260 / 260 / 150 mm |
|---|---|

## Ordering data

| Stainless steel 1.4404 316L, electropolished | Order No. |
|---|---|
| 1 gland plate - bottom side (B) | 1194610000 |
| 2 gland plates - top and bottom sides (A & B) | 1194620000 |
| 3 gland plates - bottom, left and right sides (B, C & D) | 1194630000 |
| 4 gland plates - top, bottom, left and right sides (A, B, C & D) | 1194640000 |
| **Note** | Painted sheet steel enclosure available on request. The colours of painted enclosures may vary under certain circumstances. |

## Accessories

| Mounting plates and fastening screws | Order No. |
|---|---|
| Steel sheet, zinc plated | 1193950000 |
| Stainless steel 1.4301 | 1193820000 |
| With hole pattern, natural stainless steel 1.4301 | 1257660000 |
| Fastening screws for mounting plates | 0642600000 |
| Fastening screws for terminal rails | 1274150000 |
| **Stainless steel spacer M6 x 8, Set of 4** | |
| 10 mm length | 0935110000 |
| 15 mm length | 0935120000 |
| 20 mm length | 0935130000 |
| 30 mm length | 0935140000 |
| **Gland plates and screws - 6 mm** | |
| Top and bottom sides (A & B), electropolished stainless steel 1.4404 | 1256290000 |
| Left and right sides (C & D), electropolished stainless steel 1.4404 | 1256310000 |
| Mounting screw, stainless steel 1.4404 | 1253230000 |
| **Mirror-polish Stainless steel 1.4301 rain hood (2R)** | |
| | 1281370000 |
| **Label holder** | |
| 70 x 70 angled stainless steel 1.4301 | 1279320000 |
| 130x50 stainless steel 1.4301 | 1283450000 |
| 100x25 stainless steel 1.4301 | 1257640000 |
| **Document holder** | |
| For DIN A6 size documents | 1252780000 |
| For DIN A5 size documents | |
| For DIN A4 size documents | |
| **Set of fixings** | |
| For label holders, rain hoods and document holders (rivet) | 1252190000 |
| For plastic (Trafolyte), identification plate (screw) | 1285200000 |
| **Earthing stud** | |
| Stainless steel 1.4404 | 1192690000 |
| **Padlock with two keys** | |
| Stainless steel 1.4301 | 0905680000 |

**Note**

## Max. number of terminals (industry)

| Max. number of terminals (industry) | vertical | horizontal |
|---|---|---|
| 2.5 mm² | 2x35 | 2x34 |
| 4 mm² | 1x30 | 1x29 |
| 6 mm² | 1x22 | 1x22 |
| 10 mm² | 1x18 | 1x17 |
| 16 mm² | 1x15 | 1x14 |
| 35 mm² | | |

**Note**

*For enclosure versions with zero, one or two gland plates, the horizontal gap between the mounting feet is reduced by 30 mm.
Assembly with terminal blocks provides for 10 mm clearance to the ends of the mounting rail.
Recommended order:
TS 35 mounting rail (screw terminal) WDU 2.5 1020000000 / (tension clamp terminal) ZDU 2.5 1608510000 / (tension clamp terminal) PDU 2.5 1896110000
TS 32 mounting rail (screw terminal) SAK 2.5 0279660000
TS 15 mounting rail (screw terminal) AKZ 2.5 0697160000

## Number of cable entries

| Number of cable entries | A / B | C / D |
|---|---|---|
| M12 | 20 | 15 |
| M16 | 11 | 8 |
| M20 | 9 | 7 |
| M25 | 4 | 3 |
| M32 | 3 | 2 |
| M40 | 3 | 2 |
| M50 | 2 | 2 |
| M63 | 0 | 0 |
| M75 | 0 | 0 |

**Note** Our IP 68 brass cable glands are used as the reference for these guideline values.

## Dimensions of mounting plate

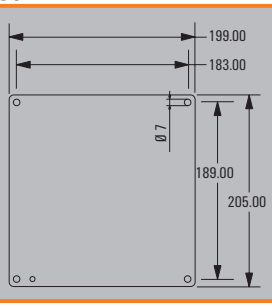

## Klippon® TB MH 262620

**Depth** 200 mm

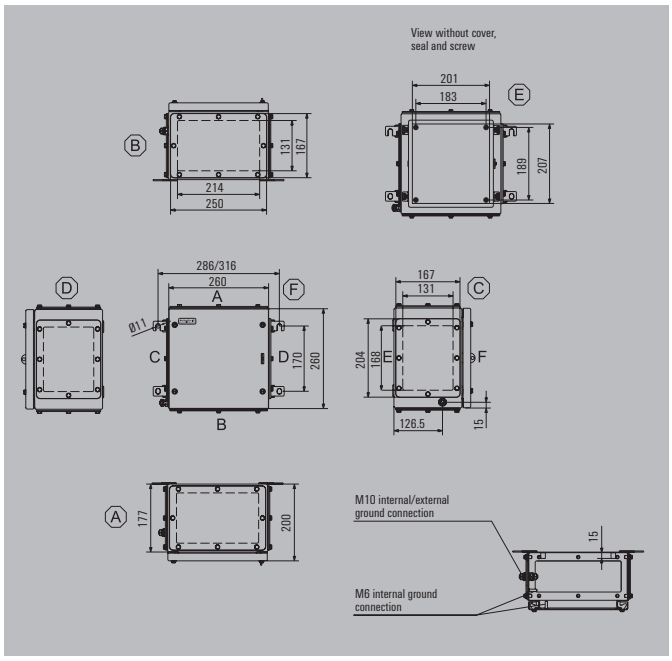


| Height/Width/Depth | 260 / 260 / 200 mm |
|---|---|

### Ordering data

| Stainless steel 1.4404 316L, electropolished | Order No. |
|---|---|
| 1 gland plate - bottom side (B) | 1194660000 |
| 2 gland plates - top and bottom sides (A & B) | 1194670000 |
| 3 gland plates - bottom, left and right sides (B, C & D) | 1194680000 |
| 4 gland plates - top, bottom, left and right sides (A, B, C & D) | 1194690000 |
| **Note** | Painted sheet steel enclosure available on request. The colours of painted enclosures may vary under certain circumstances. |

### Accessories

| Mounting plates and fastening screws | Order No. |
|---|---|
| Steel sheet, zinc plated | 1193950000 |
| Stainless steel 1.4301 | 1193820000 |
| With hole pattern, natural stainless steel 1.4301 | 1257660000 |
| Fastening screws for mounting plates | 0642600000 |
| Fastening screws for terminal rails | 1274150000 |
| **Stainless steel spacer M6 x 8, Set of 4** | |
| 10 mm length | 0935110000 |
| 15 mm length | 0935120000 |
| 20 mm length | 0935130000 |
| 30 mm length | 0935140000 |
| **Gland plates and screws - 6 mm** | |
| Top and bottom sides (A & B), electropolished stainless steel 1.4404 | 1256320000 |
| Left and right sides (C & D), electropolished stainless steel 1.4404 | 1256330000 |
| Mounting screw, stainless steel 1.4404 | 1253230000 |
| **Mirror-polish Stainless steel 1.4301 rain hood (2R)** | |
| | 1281380000 |
| **Label holder** | |
| 70 x 70 angled stainless steel 1.4301 | 1279320000 |
| 130x50 stainless steel 1.4301 | 1283450000 |
| 100x25 stainless steel 1.4301 | 1257640000 |
| **Document holder** | |
| For DIN A6 size documents | 1252780000 |
| For DIN A5 size documents | |
| For DIN A4 size documents | |
| **Set of fixings** | |
| For label holders, rain hoods and document holders (rivet) | 1252190000 |
| For plastic (Trafolyte), identification plate (screw) | 1285200000 |
| **Earthing stud** | |
| Stainless steel 1.4404 | 1192690000 |
| **Padlock with two keys** | |
| Stainless steel 1.4301 | 0905680000 |

**Note**

### Max. number of terminals (industry)

| Max. number of terminals (industry) | vertical | horizontal |
|---|---|---|
| 2.5 mm² | 2x35 | 2x34 |
| 4 mm² | 1x30 | 1x29 |
| 6 mm² | 1x22 | 1x22 |
| 10 mm² | 1x18 | 1x17 |
| 16 mm² | 1x15 | 1x14 |
| 35 mm² | | |

**Note**

*For enclosure versions with zero, one or two gland plates, the horizontal gap between the mounting feet is reduced by 30 mm.
Assembly with terminal blocks provides for 10 mm clearance to the ends of the mounting rail.
Recommended order:
TS 35 mounting rail (screw terminal) WDU 2.5 1020000000 / (tension clamp terminal) ZDU 2.5 1608510000 / (tension clamp terminal) PDU 2.5 1896110000
TS 32 mounting rail (screw terminal) SAK 2.5 0279660000
TS 15 mounting rail (screw terminal) AKZ 2.5 0697160000

### Number of cable entries

| Number of cable entries | A / B | C / D |
|---|---|---|
| M12 | 33 | 25 |
| M16 | 22 | 16 |
| M20 | 14 | 11 |
| M25 | 12 | 9 |
| M32 | 6 | 4 |
| M40 | 5 | 4 |
| M50 | 2 | 2 |
| M63 | 2 | 1 |
| M75 | 1 | 1 |

**Note** Our IP 68 brass cable glands serve as a reference for these recommended values.

### Dimensions of mounting plate

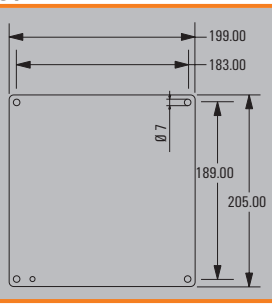

## Klippon® TB MH 303015

**Depth** 150 mm

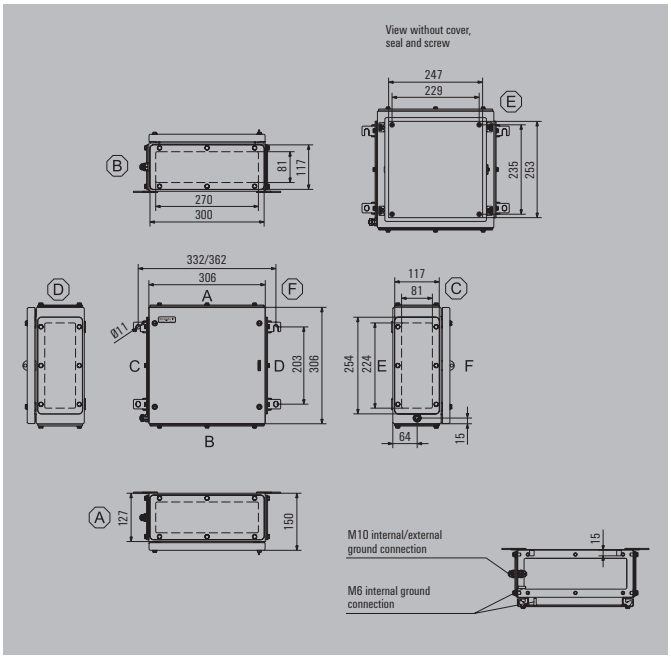


| | |
|---|---|
| Height/Width/Depth | 306 / 306 / 150 mm |

### Ordering data

| Stainless steel 1.4404 316L, electropolished | Order No. |
|---|---|
| 1 gland plate - bottom side (B) | 1194710000 |
| 2 gland plates - top and bottom sides (A & B) | 1194720000 |
| 3 gland plates - bottom, left and right sides (B, C & D) | 1194730000 |
| 4 gland plates - top, bottom, left and right sides (A, B, C & D) | 1194740000 |
| **Note** | Painted sheet steel enclosure available on request. The colours of painted enclosures may vary under certain circumstances. |

### Accessories

| Mounting plates and fastening screws | Order No. |
|---|---|
| Steel sheet, zinc plated | 1193960000 |
| Stainless steel 1.4301 | 1193830000 |
| With hole pattern, natural stainless steel 1.4301 | 1257670000 |
| Fastening screws for mounting plates | 0642600000 |
| Fastening screws for terminal rails | 1274150000 |
| **Stainless steel spacer M6 x 8, Set of 4** | |
| 10 mm length | 0935110000 |
| 15 mm length | 0935120000 |
| 20 mm length | 0935130000 |
| 30 mm length | 0935140000 |
| **Gland plates and screws - 6 mm** | |
| Top and bottom sides (A & B), electropolished stainless steel 1.4404 | 1256340000 |
| Left and right sides (C & D), electropolished stainless steel 1.4404 | 1256350000 |
| Mounting screw, stainless steel 1.4404 | 1253230000 |
| **Mirror-polish Stainless steel 1.4301 rain hood (2R)** | |
| | 1281390000 |
| **Label holder** | |
| 70 x 70 angled stainless steel 1.4301 | 1279320000 |
| 130x50 stainless steel 1.4301 | 1283450000 |
| 100x25 stainless steel 1.4301 | 1257640000 |
| **Document holder** | |
| For DIN A6 size documents | 1252780000 |
| For DIN A5 size documents | |
| For DIN A4 size documents | |
| **Set of fixings** | |
| For label holders, rain hoods and document holders (rivet) | 1252190000 |
| For plastic (Trafolyte), identification plate (screw) | 1285200000 |
| **Earthing stud** | |
| Stainless steel 1.4404 | 1192690000 |
| **Padlock with two keys** | |
| Stainless steel 1.4301 | 0905680000 |

**Note**

### Max. number of terminals (industry)

| Max. number of terminals (industry) | vertical | horizontal |
|---|---|---|
| 2.5 mm² | 2x44 | 2x43 |
| 4 mm² | 2x37 | 2x36 |
| 6 mm² | 2x28 | 2x27 |
| 10 mm² | 1x22 | 1x22 |
| 16 mm² | 1x19 | 1x18 |
| 35 mm² | 1x14 | 1x13 |

**Note**

*For enclosure versions with zero, one or two gland plates, the horizontal gap between the mounting feet is reduced by 30 mm.
Assembly with terminal blocks provides for 10 mm clearance to the ends of the mounting rail.
Recommended order:
TS 35 mounting rail (screw terminal) WDU 2.5 1020000000 / (tension clamp terminal) ZDU 2.5 1608510000 / (tension clamp terminal) PDU 2.5 1896110000
TS 32 mounting rail (screw terminal) SAK 2.5 0279660000
TS 15 mounting rail (screw terminal) AKZ 2.5 0697160000

### Number of cable entries

| Number of cable entries | A / B | C / D |
|---|---|---|
| M12 | 24 | 20 |
| M16 | 13 | 11 |
| M20 | 11 | 9 |
| M25 | 5 | 4 |
| M32 | 4 | 3 |
| M40 | 3 | 3 |
| M50 | 3 | 2 |
| M63 | 0 | 0 |
| M75 | 0 | 0 |

**Note** Our IP 68 brass cable glands are used as the reference for these guideline values.

### Dimensions of mounting plate

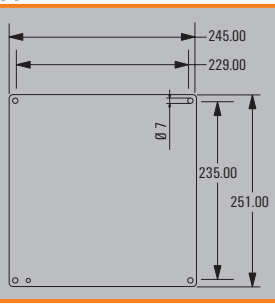

## Klippon® TB MH 303020

**Depth** 200 mm

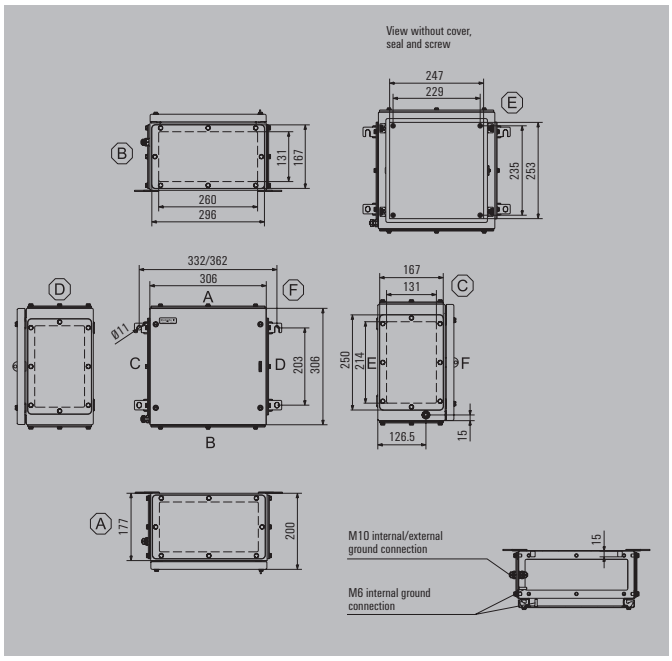


| Height/Width/Depth | 306 / 306 / 200 mm |
|---|---|

### Ordering data

| Stainless steel 1.4404 316L, electropolished | Order No. |
|---|---|
| 1 gland plate - bottom side (B) | 1194760000 |
| 2 gland plates - top and bottom sides (A & B) | 1194770000 |
| 3 gland plates - bottom, left and right sides (B, C & D) | 1194780000 |
| 4 gland plates - top, bottom, left and right sides (A, B, C & D) | 1194790000 |
| **Note** | Painted sheet steel enclosure available on request. The colours of painted enclosures may vary under certain circumstances. |

### Accessories

| Mounting plates and fastening screws | Order No. |
|---|---|
| Steel sheet, zinc plated | 1193960000 |
| Stainless steel 1.4301 | 1193830000 |
| With hole pattern, natural stainless steel 1.4301 | 1257670000 |
| Fastening screws for mounting plates | 0642600000 |
| Fastening screws for terminal rails | 1274150000 |
| **Stainless steel spacer M6 x 8, Set of 4** | |
| 10 mm length | 0935110000 |
| 15 mm length | 0935120000 |
| 20 mm length | 0935130000 |
| 30 mm length | 0935140000 |
| **Gland plates and screws - 6 mm** | |
| Top and bottom sides (A & B), electropolished stainless steel 1.4404 | 1256360000 |
| Left and right sides (C & D), electropolished stainless steel 1.4404 | 1256370000 |
| Mounting screw, stainless steel 1.4404 | 1253230000 |
| **Mirror-polish Stainless steel 1.4301 rain hood (2R)** | |
| | 1281400000 |
| **Label holder** | |
| 70 x 70 angled stainless steel 1.4301 | 1279320000 |
| 130x50 stainless steel 1.4301 | 1283450000 |
| 100x25 stainless steel 1.4301 | 1257640000 |
| **Document holder** | |
| For DIN A6 size documents | 1252780000 |
| For DIN A5 size documents | |
| For DIN A4 size documents | |
| **Set of fixings** | |
| For label holders, rain hoods and document holders (rivet) | 1252190000 |
| For plastic (Trafolyte), identification plate (screw) | 1285200000 |
| **Earthing stud** | |
| Stainless steel 1.4404 | 1192690000 |
| **Padlock with two keys** | |
| Stainless steel 1.4301 | 0905680000 |

**Note**

### Max. number of terminals (industry)

| Max. number of terminals (industry) | vertical | horizontal |
|---|---|---|
| 2.5 mm² | 2x44 | 2x43 |
| 4 mm² | 2x37 | 2x36 |
| 6 mm² | 2x28 | 2x27 |
| 10 mm² | 1x22 | 1x22 |
| 16 mm² | 1x19 | 1x18 |
| 35 mm² | 1x14 | 1x13 |

**Note**

*For enclosure versions with zero, one or two gland plates, the horizontal gap between the mounting feet is reduced by 30 mm.
Assembly with terminal blocks provides for 10 mm clearance to the ends of the mounting rail.
Recommended order:
TS 35 mounting rail (screw terminal) WDU 2.5 1020000000 / (tension clamp terminal) ZDU 2.5 1608510000 / (tension clamp terminal) PDU 2.5 1896110000
TS 32 mounting rail (screw terminal) SAK 2.5 0279660000
TS 15 mounting rail (screw terminal) AKZ 2.5 0697160000

### Number of cable entries

| Number of cable entries | A / B | C / D |
|---|---|---|
| M12 | 40 | 33 |
| M16 | 26 | 22 |
| M20 | 17 | 14 |
| M25 | 14 | 12 |
| M32 | 8 | 6 |
| M40 | 6 | 5 |
| M50 | 3 | 2 |
| M63 | 2 | 2 |
| M75 | 2 | 1 |
| **Note** | Our IP 68 brass cable glands serve as a reference for these recommended values. | |

### Dimensions of mounting plate

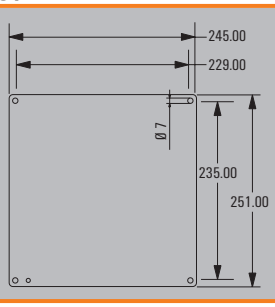

## Klippon® TB MH 352615

**Depth** 150 mm

| | |
|---|---|
| Height/Width/Depth | 350 / 260 / 150 mm |

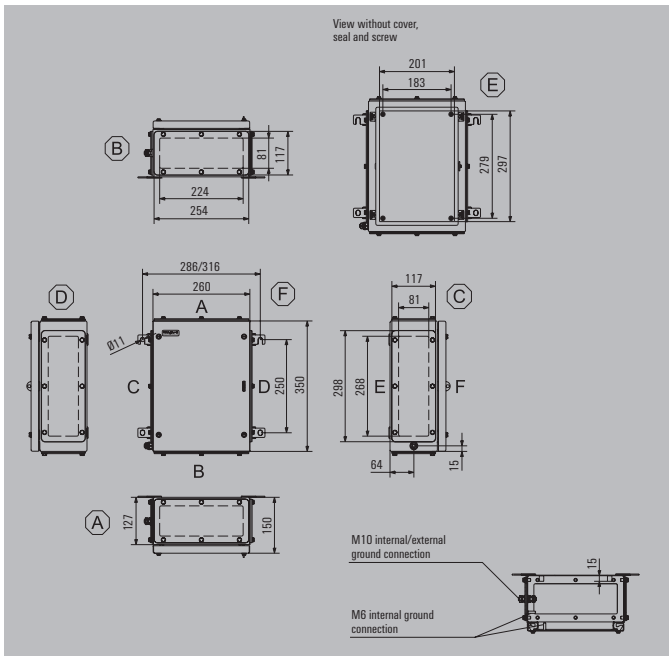


## Ordering data

| Stainless steel 1.4404 316L, electropolished | Order No. |
|---|---|
| 1 gland plate - bottom side (B) | 1194810000 |
| 2 gland plates - top and bottom sides (A & B) | 1194820000 |
| 3 gland plates - bottom, left and right sides (B, C & D) | 1194830000 |
| 4 gland plates - top, bottom, left and right sides (A, B, C & D) | 1194840000 |
| **Note** Painted sheet steel enclosure available on request. Standard colour is similar to RAL 7035. | |

## Max. number of terminals (industry)

| Max. number of terminals (industry) | vertical | horizontal |
|---|---|---|
| 2.5 mm² | 2x53 | 2x34 |
| 4 mm² | 1x44 | 2x29 |
| 6 mm² | 1x33 | 2x22 |
| 10 mm² | 1x27 | 2x17 |
| 16 mm² | 1x22 | 1x14 |
| 35 mm² | | 1x11 |

**Note** *For enclosure versions with zero, one or two gland plates, the horizontal gap between the mounting feet is reduced by 30 mm.
Assembly with terminal blocks provides for 10 mm clearance to the ends of the mounting rail.
Recommended order:
TS 35 mounting rail (screw terminal) WDU 2.5 1020000000 / (tension clamp terminal) ZDU 2.5 1608510000 / (tension clamp terminal) PDU 2.5 1896110000
TS 32 mounting rail (screw terminal) SAK 2.5 0279660000
TS 15 mounting rail (screw terminal) AKZ 2.5 0697160000

## Accessories

| Mounting plates and fastening screws | Order No. |
|---|---|
| Steel sheet, zinc plated | 1193970000 |
| Stainless steel 1.4301 | 1193840000 |
| With hole pattern, natural stainless steel 1.4301 | 1257680000 |
| Fastening screws for mounting plates | 0642600000 |
| Fastening screws for terminal rails | 1274150000 |
| **Stainless steel spacer M6 x 8, Set of 4** | |
| 10 mm length | 0935110000 |
| 15 mm length | 0935120000 |
| 20 mm length | 0935130000 |
| 30 mm length | 0935140000 |
| **Gland plates and screws - 6 mm** | |
| Top and bottom sides (A & B), electropolished stainless steel 1.4404 | 1256380000 |
| Left and right sides (C & D), electropolished stainless steel 1.4404 | 1256390000 |
| Mounting screw, stainless steel 1.4404 | 1253230000 |
| **Mirror-polish Stainless steel 1.4301 rain hood (2R)** | |
| | 1281410000 |
| **Label holder** | |
| 70 x 70 angled stainless steel 1.4301 | 1279320000 |
| 130x50 stainless steel 1.4301 | 1283450000 |
| 100x25 stainless steel 1.4301 | 1257640000 |
| **Document holder** | |
| For DIN A6 size documents | 1252780000 |
| For DIN A5 size documents | |
| For DIN A4 size documents | |
| **Set of fixings** | |
| For label holders, rain hoods and document holders (rivet) | 1252190000 |
| For plastic (Trafolyte), identification plate (screw) | 1285200000 |
| **Earthing stud** | |
| Stainless steel 1.4404 | 1192690000 |
| **Padlock with two keys** | |
| Stainless steel 1.4301 | 0905680000 |

**Note**

## Number of cable entries

| Number of cable entries | A / B | C / D |
|---|---|---|
| M12 | 20 | 23 |
| M16 | 11 | 13 |
| M20 | 9 | 11 |
| M25 | 4 | 5 |
| M32 | 3 | 4 |
| M40 | 3 | 3 |
| M50 | 2 | 3 |
| M63 | 0 | 0 |
| M75 | 0 | 0 |

**Note** Our IP 68 brass cable glands are used as the reference for these guideline values.

## Dimensions of mounting plate

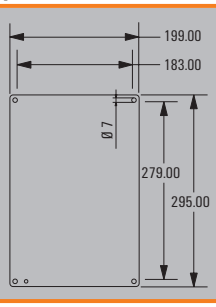

## Klippon® TB MH 352620

**Depth** 200 mm

| | |
|---|---|
| Height/Width/Depth | 350 / 260 / 200 mm |

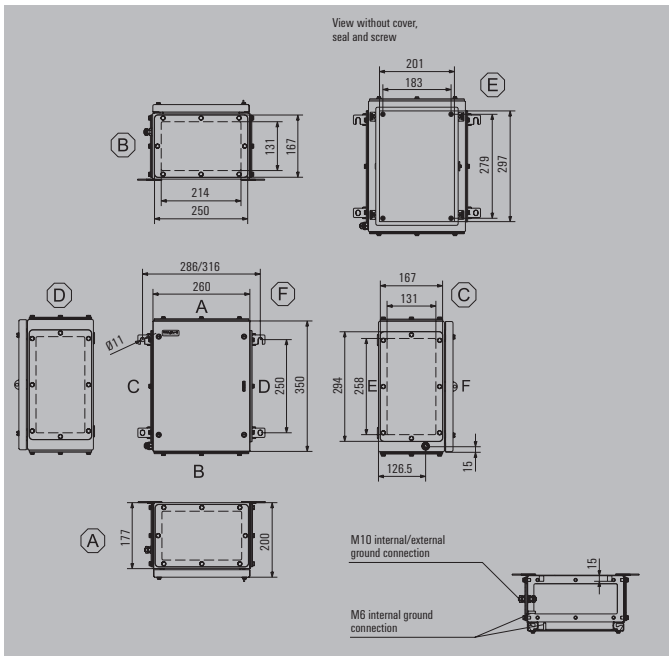


## Ordering data

| Stainless steel 1.4404 316L, electropolished | Order No. |
|---|---|
| 1 gland plate - bottom side (B) | 1194860000 |
| 2 gland plates - top and bottom sides (A & B) | 1194870000 |
| 3 gland plates - bottom, left and right sides (B, C & D) | 1194880000 |
| 4 gland plates - top, bottom, left and right sides (A, B, C & D) | 1194890000 |
| **Note** | Painted sheet steel enclosure available on request. Standard colour is similar to RAL 7035. |

## Accessories

| Mounting plates and fastening screws | Order No. |
|---|---|
| Steel sheet, zinc plated | 1193970000 |
| Stainless steel 1.4301 | 1193840000 |
| With hole pattern, natural stainless steel 1.4301 | 1257680000 |
| Fastening screws for mounting plates | 0642600000 |
| Fastening screws for terminal rails | 1274150000 |
| **Stainless steel spacer M6 x 8, Set of 4** | |
| 10 mm length | 0935110000 |
| 15 mm length | 0935120000 |
| 20 mm length | 0935130000 |
| 30 mm length | 0935140000 |
| **Gland plates and screws - 6 mm** | |
| Top and bottom sides (A & B), electropolished stainless steel 1.4404 | 1256410000 |
| Left and right sides (C & D), electropolished stainless steel 1.4404 | 1256420000 |
| Mounting screw, stainless steel 1.4404 | 1253230000 |
| **Mirror-polish Stainless steel 1.4301 rain hood (2R)** | |
| | 1281420000 |
| **Label holder** | |
| 70 x 70 angled stainless steel 1.4301 | 1279320000 |
| 130x50 stainless steel 1.4301 | 1283450000 |
| 100x25 stainless steel 1.4301 | 1257640000 |
| **Document holder** | |
| For DIN A6 size documents | 1252780000 |
| For DIN A5 size documents | |
| For DIN A4 size documents | |
| **Set of fixings** | |
| For label holders, rain hoods and document holders (rivet) | 1252190000 |
| For plastic (Trafolyte), identification plate (screw) | 1285200000 |
| **Earthing stud** | |
| Stainless steel 1.4404 | 1192690000 |
| **Padlock with two keys** | |
| Stainless steel 1.4301 | 0905680000 |

**Note**

## Max. number of terminals (industry)

| Max. number of terminals (industry) | vertical | horizontal |
|---|---|---|
| 2.5 mm² | 2x53 | 2x34 |
| 4 mm² | 1x44 | 2x29 |
| 6 mm² | 1x33 | 2x22 |
| 10 mm² | 1x27 | 2x17 |
| 16 mm² | 1x22 | 1x14 |
| 35 mm² | | 1x11 |

**Note**

*For enclosure versions with zero, one or two gland plates, the horizontal gap between the mounting feet is reduced by 30 mm.
Assembly with terminal blocks provides for 10 mm clearance to the ends of the mounting rail.
Recommended order:
TS 35 mounting rail (screw terminal) WDU 2.5 1020000000 / (tension clamp terminal) ZDU 2.5 1608510000 / (tension clamp terminal) PDU 2.5 1896110000
TS 32 mounting rail (screw terminal) SAK 2.5 0279660000
TS 15 mounting rail (screw terminal) AKZ 2.5 0697160000

## Number of cable entries

| Number of cable entries | A / B | C / D |
|---|---|---|
| M12 | 33 | 38 |
| M16 | 22 | 26 |
| M20 | 14 | 17 |
| M25 | 12 | 14 |
| M32 | 6 | 7 |
| M40 | 5 | 6 |
| M50 | 2 | 3 |
| M63 | 2 | 2 |
| M75 | 1 | 2 |

**Note** Our IP 68 brass cable glands serve as a reference for these recommended values.

## Dimensions of mounting plate

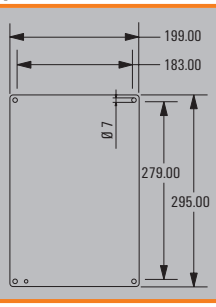

## Klippon® TB MH 403015

**Depth** 150 mm

| Height/Width/Depth | 400 / 300 / 150 mm |
|---|---|

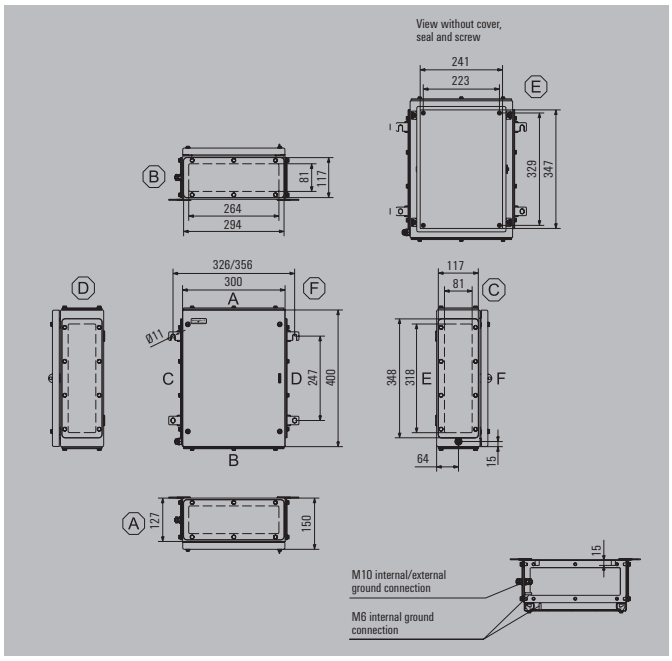


## Ordering data

| Stainless steel 1.4404 316L, electropolished | Order No. |
|---|---|
| 1 gland plate - bottom side (B) | 1194910000 |
| 2 gland plates - top and bottom sides (A & B) | 1194920000 |
| 3 gland plates - bottom, left and right sides (B, C & D) | 1194930000 |
| 4 gland plates - top, bottom, left and right sides (A, B, C & D) | 1194940000 |
| **Note** | Painted sheet steel enclosure available on request. Standard colour is similar to RAL 7035. |

## Max. number of terminals (industry)

| Max. number of terminals (industry) | vertical | horizontal |
|---|---|---|
| 2.5 mm² | 2x62 | 3x42 |
| 4 mm² | 2x52 | 3x35 |
| 6 mm² | 1x39 | 2x26 |
| 10 mm² | 1x32 | 2x21 |
| 16 mm² | 1x26 | 2x18 |
| 35 mm² | 1x20 | 1x13 |

**Note**

*For enclosure versions with zero, one or two gland plates, the horizontal gap between the mounting feet is reduced by 30 mm.
Assembly with terminal blocks provides for 10 mm clearance to the ends of the mounting rail.
Recommended order:
TS 35 mounting rail (screw terminal) WDU 2.5 1020000000 / (tension clamp terminal) ZDU 2.5 1608510000 / (tension clamp terminal) PDU 2.5 1896110000
TS 32 mounting rail (screw terminal) SAK 2.5 0279660000
TS 15 mounting rail (screw terminal) AKZ 2.5 0697160000

## Accessories

| Mounting plates and fastening screws | Order No. |
|---|---|
| Steel sheet, zinc plated | 1193980000 |
| Stainless steel 1.4301 | 1193850000 |
| With hole pattern, natural stainless steel 1.4301 | 1257690000 |
| Fastening screws for mounting plates | 0642600000 |
| Fastening screws for terminal rails | 1274150000 |
| **Stainless steel spacer M6 x 8, Set of 4** | |
| 10 mm length | 0935110000 |
| 15 mm length | 0935120000 |
| 20 mm length | 0935130000 |
| 30 mm length | 0935140000 |
| **Gland plates and screws - 6 mm** | |
| Top and bottom sides (A & B), electropolished stainless steel 1.4404 | 1256430000 |
| Left and right sides (C & D), electropolished stainless steel 1.4404 | 1256440000 |
| Mounting screw, stainless steel 1.4404 | 1253230000 |
| **Mirror-polish Stainless steel 1.4301 rain hood (2R)** | |
| | 1281430000 |
| **Label holder** | |
| 70 x 70 angled stainless steel 1.4301 | 1279320000 |
| 130x50 stainless steel 1.4301 | 1283450000 |
| 100x25 stainless steel 1.4301 | 1257640000 |
| **Document holder** | |
| For DIN A6 size documents | 1252780000 |
| For DIN A5 size documents | |
| For DIN A4 size documents | |
| **Set of fixings** | |
| For label holders, rain hoods and document holders (rivet) | 1252190000 |
| For plastic (Trafolyte), identification plate (screw) | 1285200000 |
| **Earthing stud** | |
| Stainless steel 1.4404 | 1192690000 |
| **Padlock with two keys** | |
| Stainless steel 1.4301 | 0905680000 |

**Note**

## Number of cable entries

| Number of cable entries | A / B | C / D |
|---|---|---|
| M12 | 23 | 29 |
| M16 | 13 | 16 |
| M20 | 11 | 13 |
| M25 | 5 | 6 |
| M32 | 4 | 5 |
| M40 | 3 | 4 |
| M50 | 3 | 3 |
| M63 | 0 | 0 |
| M75 | 0 | 0 |
| **Note** | Our IP 68 brass cable glands are used as the reference for these guideline values. | |

## Dimensions of mounting plate

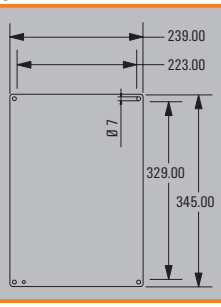

## Klippon® TB MH 403020

**Depth** 200 mm

| Height/Width/Depth | 400 / 300 / 200 mm |
|---|---|

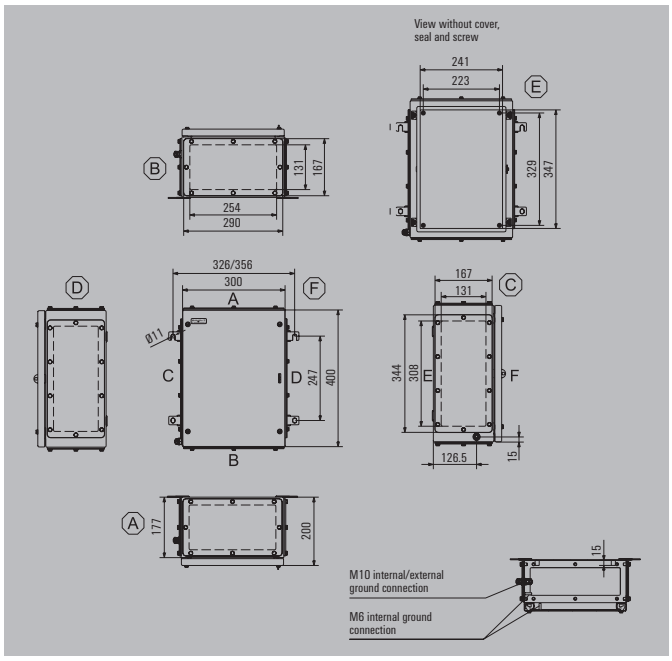


### Ordering data

| Stainless steel 1.4404 316L, electropolished | Order No. |
|---|---|
| 1 gland plate - bottom side (B) | 1194960000 |
| 2 gland plates - top and bottom sides (A & B) | 1194970000 |
| 3 gland plates - bottom, left and right sides (B, C & D) | 1194980000 |
| 4 gland plates - top, bottom, left and right sides (A, B, C & D) | 1194990000 |
| **Note** | Painted sheet steel enclosure available on request. Standard colour is similar to RAL 7035. |

### Accessories

| Mounting plates and fastening screws | Order No. |
|---|---|
| Steel sheet, zinc plated | 1193980000 |
| Stainless steel 1.4301 | 1193850000 |
| With hole pattern, natural stainless steel 1.4301 | 1257690000 |
| Fastening screws for mounting plates | 0642600000 |
| Fastening screws for terminal rails | 1274150000 |
| **Stainless steel spacer M6 x 8, Set of 4** | |
| 10 mm length | 0935110000 |
| 15 mm length | 0935120000 |
| 20 mm length | 0935130000 |
| 30 mm length | 0935140000 |
| **Gland plates and screws - 6 mm** | |
| Top and bottom sides (A & B), electropolished stainless steel 1.4404 | 1256450000 |
| Left and right sides (C & D), electropolished stainless steel 1.4404 | 1256470000 |
| Mounting screw, stainless steel 1.4404 | 1253230000 |
| **Mirror-polish Stainless steel 1.4301 rain hood (2R)** | |
| | 1281440000 |
| **Label holder** | |
| 70 x 70 angled stainless steel 1.4301 | 1279320000 |
| 130x50 stainless steel 1.4301 | 1283450000 |
| 100x25 stainless steel 1.4301 | 1257640000 |
| **Document holder** | |
| For DIN A6 size documents | 1252780000 |
| For DIN A5 size documents | |
| For DIN A4 size documents | |
| **Set of fixings** | |
| For label holders, rain hoods and document holders (rivet) | 1252190000 |
| For plastic (Trafolyte), identification plate (screw) | 1285200000 |
| **Earthing stud** | |
| Stainless steel 1.4404 | 1192690000 |
| **Padlock with two keys** | |
| Stainless steel 1.4301 | 0905680000 |

**Note**

### Max. number of terminals (industry)

| Max. number of terminals (industry) | vertical | horizontal |
|---|---|---|
| 2.5 mm² | 2x62 | 3x42 |
| 4 mm² | 2x52 | 3x35 |
| 6 mm² | 1x39 | 2x26 |
| 10 mm² | 1x32 | 2x21 |
| 16 mm² | 1x26 | 2x18 |
| 35 mm² | 1x20 | 1x13 |

**Note**

*For enclosure versions with zero, one or two gland plates, the horizontal gap between the mounting feet is reduced by 30 mm.
Assembly with terminal blocks provides for 10 mm clearance to the ends of the mounting rail.
Recommended order:
TS 35 mounting rail (screw terminal) WDU 2.5 1020000000 / (tension clamp terminal) ZDU 2.5 1608510000 / (tension clamp terminal) PDU 2.5 1896110000
TS 32 mounting rail (screw terminal) SAK 2.5 0279660000
TS 15 mounting rail (screw terminal) AKZ 2.5 0697160000

### Number of cable entries

| Number of cable entries | A / B | C / D |
|---|---|---|
| M12 | 38 | 48 |
| M16 | 26 | 32 |
| M20 | 17 | 20 |
| M25 | 14 | 17 |
| M32 | 7 | 9 |
| M40 | 6 | 7 |
| M50 | 3 | 3 |
| M63 | 2 | 3 |
| M75 | 2 | 2 |

**Note** Our IP 68 brass cable glands serve as a reference for these recommended values.

### Dimensions of mounting plate

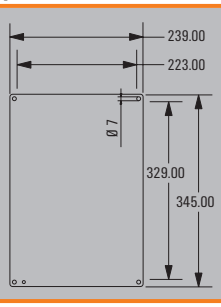

## Klippon® TB MH 453815

**Depth** 150 mm

| Height/Width/Depth | 458 / 382 / 150 mm |
|---|---|

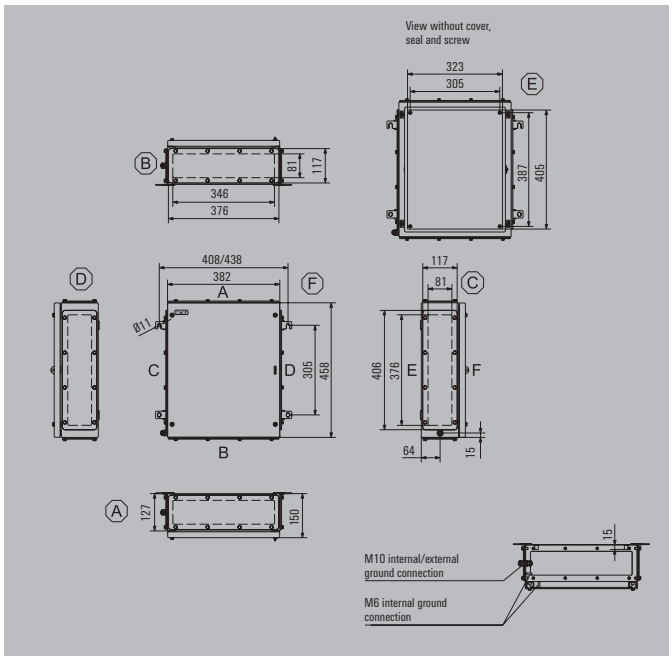


## Ordering data

| Stainless steel 1.4404 316L, electropolished | Order No. |
|---|---|
| 1 gland plate - bottom side (B) | 1195010000 |
| 2 gland plates - top and bottom sides (A & B) | 1195020000 |
| 3 gland plates - bottom, left and right sides (B, C & D) | 1195030000 |
| 4 gland plates - top, bottom, left and right sides (A, B, C & D) | 1195040000 |
| **Note** | Painted sheet steel enclosure available on request. Standard colour is similar to RAL 7035. |

## Accessories

| Mounting plates and fastening screws | Order No. |
|---|---|
| Steel sheet, zinc plated | 1193990000 |
| Stainless steel 1.4301 | 1193860000 |
| With hole pattern, natural stainless steel 1.4301 | 1257700000 |
| Fastening screws for mounting plates | 0642600000 |
| Fastening screws for terminal rails | 1274150000 |
| **Stainless steel spacer M6 x 8, Set of 4** | |
| 10 mm length | 0935110000 |
| 15 mm length | 0935120000 |
| 20 mm length | 0935130000 |
| 30 mm length | 0935140000 |
| **Gland plates and screws - 6 mm** | |
| Top and bottom sides (A & B), electropolished stainless steel 1.4404 | 1256480000 |
| Left and right sides (C & D), electropolished stainless steel 1.4404 | 1256490000 |
| Mounting screw, stainless steel 1.4404 | 1253230000 |
| **Mirror-polish Stainless steel 1.4301 rain hood (2R)** | |
| | 1281450000 |
| **Label holder** | |
| 70 x 70 angled stainless steel 1.4301 | 1279320000 |
| 130x50 stainless steel 1.4301 | 1283450000 |
| 100x25 stainless steel 1.4301 | 1257640000 |
| **Document holder** | |
| For DIN A6 size documents | 1252780000 |
| For DIN A5 size documents | 1252750000 |
| For DIN A4 size documents | |
| **Set of fixings** | |
| For label holders, rain hoods and document holders (rivet) | 1252190000 |
| For plastic (Trafolyte), identification plate (screw) | 1285200000 |
| **Earthing stud** | |
| Stainless steel 1.4404 | 1192690000 |
| **Padlock with two keys** | |
| Stainless steel 1.4301 | 0905680000 |

**Note**

## Max. number of terminals (industry)

| Max. number of terminals (industry) | vertical | horizontal |
|---|---|---|
| 2.5 mm² | 3x73 | 4x58 |
| 4 mm² | 2x62 | 3x48 |
| 6 mm² | 2x46 | 3x36 |
| 10 mm² | 2x37 | 2x29 |
| 16 mm² | 2x31 | 2x24 |
| 35 mm² | 1x23 | 1x18 |

**Note**

*For enclosure versions with zero, one or two gland plates, the horizontal gap between the mounting feet is reduced by 30 mm.
Assembly with terminal blocks provides for 10 mm clearance to the ends of the mounting rail.
Recommended order:
TS 35 mounting rail (screw terminal) WDU 2.5 1020000000 / (tension clamp terminal) ZDU 2.5 1608510000 / (tension clamp terminal) PDU 2.5 1896110000
TS 32 mounting rail (screw terminal) SAK 2.5 0279660000
TS 15 mounting rail (screw terminal) AKZ 2.5 0697160000

## Number of cable entries

| Number of cable entries | A / B | C / D |
|---|---|---|
| M12 | 30 | 33 |
| M16 | 17 | 19 |
| M20 | 15 | 16 |
| M25 | 6 | 7 |
| M32 | 5 | 6 |
| M40 | 4 | 5 |
| M50 | 4 | 4 |
| M63 | 0 | 0 |
| M75 | 0 | 0 |

**Note** Our IP 68 brass cable glands serve as a reference for these recommended values.

## Dimensions of mounting plate

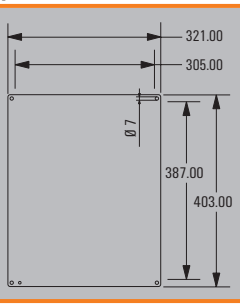

## Klippon® TB MH 453820

**Depth** 200 mm

| Height/Width/Depth | 458 / 382 / 200 mm |
|---|---|

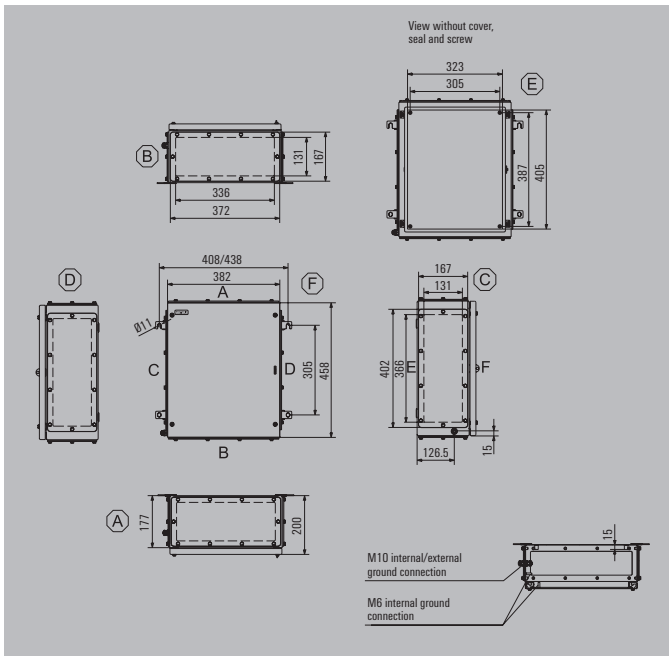


### Ordering data

| Stainless steel 1.4404 316L, electropolished | Order No. |
|---|---|
| 1 gland plate - bottom side (B) | 1195060000 |
| 2 gland plates - top and bottom sides (A & B) | 1195070000 |
| 3 gland plates - bottom, left and right sides (B, C & D) | 1195080000 |
| 4 gland plates - top, bottom, left and right sides (A, B, C & D) | 1195090000 |
| **Note** | Painted sheet steel enclosure available on request. Standard colour is similar to RAL 7035. |

### Accessories

| Mounting plates and fastening screws | Order No. |
|---|---|
| Steel sheet, zinc plated | 1193990000 |
| Stainless steel 1.4301 | 1193860000 |
| With hole pattern, natural stainless steel 1.4301 | 1257700000 |
| Fastening screws for mounting plates | 0642600000 |
| Fastening screws for terminal rails | 1274150000 |
| **Stainless steel spacer M6 x 8, Set of 4** | |
| 10 mm length | 0935110000 |
| 15 mm length | 0935120000 |
| 20 mm length | 0935130000 |
| 30 mm length | 0935140000 |
| **Gland plates and screws - 6 mm** | |
| Top and bottom sides (A & B), electropolished stainless steel 1.4404 | 1256510000 |
| Left and right sides (C & D), electropolished stainless steel 1.4404 | 1256520000 |
| Mounting screw, stainless steel 1.4404 | 1253230000 |
| **Mirror-polish Stainless steel 1.4301 rain hood (2R)** | |
| | 1281460000 |
| **Label holder** | |
| 70 x 70 angled stainless steel 1.4301 | 1279320000 |
| 130x50 stainless steel 1.4301 | 1283450000 |
| 100x25 stainless steel 1.4301 | 1257640000 |
| **Document holder** | |
| For DIN A6 size documents | 1252780000 |
| For DIN A5 size documents | 1252750000 |
| For DIN A4 size documents | |
| **Set of fixings** | |
| For label holders, rain hoods and document holders (rivet) | 1252190000 |
| For plastic (Trafolyte), identification plate (screw) | 1285200000 |
| **Earthing stud** | |
| Stainless steel 1.4404 | 1192690000 |
| **Padlock with two keys** | |
| Stainless steel 1.4301 | 0905680000 |

**Note**

### Max. number of terminals (industry)

| Max. number of terminals (industry) | vertical | horizontal |
|---|---|---|
| 2.5 mm² | 3x73 | 4x58 |
| 4 mm² | 2x62 | 3x48 |
| 6 mm² | 2x46 | 3x36 |
| 10 mm² | 2x37 | 2x29 |
| 16 mm² | 2x31 | 2x24 |
| 35 mm² | 1x23 | 1x18 |

**Note**

*For enclosure versions with zero, one or two gland plates, the horizontal gap between the mounting feet is reduced by 30 mm.
Assembly with terminal blocks provides for 10 mm clearance to the ends of the mounting rail.
Recommended order:
TS 35 mounting rail (screw terminal) WDU 2.5 1020000000 / (tension clamp terminal) ZDU 2.5 1608510000 / (tension clamp terminal) PDU 2.5 1896110000
TS 32 mounting rail (screw terminal) SAK 2.5 0279660000
TS 15 mounting rail (screw terminal) AKZ 2.5 0697160000

### Number of cable entries

| Number of cable entries | A / B | C / D |
|---|---|---|
| M12 | 50 | 55 |
| M16 | 34 | 38 |
| M20 | 23 | 24 |
| M25 | 18 | 21 |
| M32 | 10 | 11 |
| M40 | 8 | 9 |
| M50 | 4 | 4 |
| M63 | 3 | 3 |
| M75 | 2 | 3 |

**Note** Our IP 68 brass cable glands are used as the reference for these guideline values.

### Dimensions of mounting plate

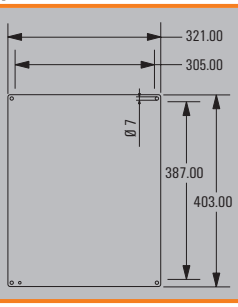

## Klippon® TB MH 484815

**Depth** 150 mm

| Height/Width/Depth | 480 / 480 / 150 mm |
|---|---|

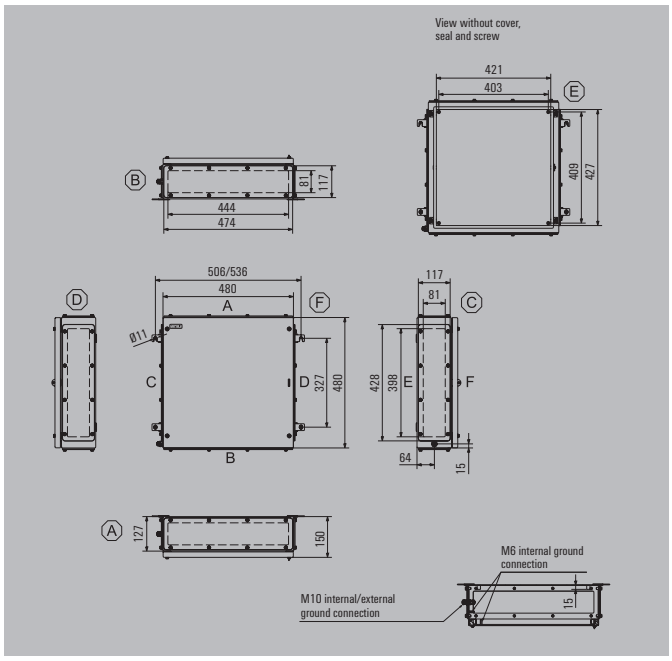


### Ordering data

| Stainless steel 1.4404 316L, electropolished | Order No. |
|---|---|
| 1 gland plate - bottom side (B) | 1195110000 |
| 2 gland plates - top and bottom sides (A & B) | 1195120000 |
| 3 gland plates - bottom, left and right sides (B, C & D) | 1195130000 |
| 4 gland plates - top, bottom, left and right sides (A, B, C & D) | 1195140000 |
| **Note** | Painted sheet steel enclosure available on request. Standard colour is similar to RAL 7035. |

### Accessories

| Mounting plates and fastening screws | Order No. |
|---|---|
| Steel sheet, zinc plated | 1194000000 |
| Stainless steel 1.4301 | 1193870000 |
| With hole pattern, natural stainless steel 1.4301 | 1257710000 |
| Fastening screws for mounting plates | 0642600000 |
| Fastening screws for terminal rails | 1274150000 |
| **Stainless steel spacer M6 x 8, Set of 4** | |
| 10 mm length | 0935110000 |
| 15 mm length | 0935120000 |
| 20 mm length | 0935130000 |
| 30 mm length | 0935140000 |
| **Gland plates and screws - 6 mm** | |
| Top and bottom sides (A & B), electropolished stainless steel 1.4404 | 1256530000 |
| Left and right sides (C & D), electropolished stainless steel 1.4404 | 1256540000 |
| Mounting screw, stainless steel 1.4404 | 1253230000 |
| **Mirror-polish Stainless steel 1.4301 rain hood (2R)** | |
| | 1281470000 |
| **Label holder** | |
| 70 x 70 angled stainless steel 1.4301 | 1279320000 |
| 130x50 stainless steel 1.4301 | 1283450000 |
| 100x25 stainless steel 1.4301 | 1257640000 |
| **Document holder** | |
| For DIN A6 size documents | 1252780000 |
| For DIN A5 size documents | 1252750000 |
| For DIN A4 size documents | 1252730000 |
| **Set of fixings** | |
| For label holders, rain hoods and document holders (rivet) | 1252190000 |
| For plastic (Trafolyte), identification plate (screw) | 1285200000 |
| **Earthing stud** | |
| Stainless steel 1.4404 | 1192690000 |
| **Padlock with two keys** | |
| Stainless steel 1.4301 | 0905680000 |

**Note**

### Max. number of terminals (industry)

| Max. number of terminals (industry) | vertical | horizontal |
|---|---|---|
| 2.5 mm² | 4x78 | 4x77 |
| 4 mm² | 3x65 | 3x64 |
| 6 mm² | 3x49 | 3x48 |
| 10 mm² | 2x39 | 3x39 |
| 16 mm² | 2x33 | 2x32 |
| 35 mm² | 1x25 | 2x24 |

**Note**

*For enclosure versions with zero, one or two gland plates, the horizontal gap between the mounting feet is reduced by 30 mm.
Assembly with terminal blocks provides for 10 mm clearance to the ends of the mounting rail.
Recommended order:
TS 35 mounting rail (screw terminal) WDU 2.5 1020000000 / (tension clamp terminal) ZDU 2.5 1608510000 / (tension clamp terminal) PDU 2.5 1896110000
TS 32 mounting rail (screw terminal) SAK 2.5 0279660000
TS 15 mounting rail (screw terminal) AKZ 2.5 0697160000

### Number of cable entries

| Number of cable entries | A / B | C / D |
|---|---|---|
| M12 | 39 | 36 |
| M16 | 22 | 20 |
| M20 | 19 | 17 |
| M25 | 8 | 7 |
| M32 | 7 | 6 |
| M40 | 6 | 5 |
| M50 | 5 | 4 |
| M63 | 0 | 0 |
| M75 | 0 | 0 |

**Note** Our IP 68 brass cable glands serve as a reference for these recommended values.

### Dimensions of mounting plate

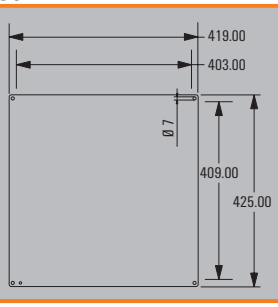

## Klippon® TB MH 484820

**Depth** 200 mm

| Height/Width/Depth | 480 / 480 / 200 mm |
|---|---|

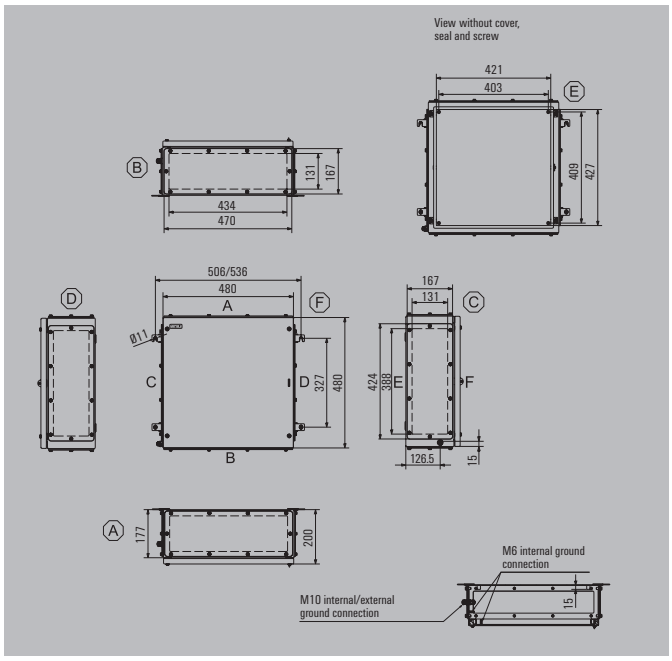


### Ordering data

| Stainless steel 1.4404 316L, electropolished | Order No. |
|---|---|
| 1 gland plate - bottom side (B) | 1195160000 |
| 2 gland plates - top and bottom sides (A & B) | 1195170000 |
| 3 gland plates - bottom, left and right sides (B, C & D) | 1195180000 |
| 4 gland plates - top, bottom, left and right sides (A, B, C & D) | 1195190000 |
| **Note** Painted sheet steel enclosure available on request. Standard colour is similar to RAL 7035. | |

### Accessories

| Mounting plates and fastening screws | Order No. |
|---|---|
| Steel sheet, zinc plated | 1194000000 |
| Stainless steel 1.4301 | 1193870000 |
| With hole pattern, natural stainless steel 1.4301 | 1257710000 |
| Fastening screws for mounting plates | 0642600000 |
| Fastening screws for terminal rails | 1274150000 |
| **Stainless steel spacer M6 x 8, Set of 4** | |
| 10 mm length | 0935110000 |
| 15 mm length | 0935120000 |
| 20 mm length | 0935130000 |
| 30 mm length | 0935140000 |
| **Gland plates and screws - 6 mm** | |
| Top and bottom sides (A & B), electropolished stainless steel 1.4404 | 1256550000 |
| Left and right sides (C & D), electropolished stainless steel 1.4404 | 1256560000 |
| Mounting screw, stainless steel 1.4404 | 1253230000 |
| **Mirror-polish Stainless steel 1.4301 rain hood (2R)** | |
| | 1281480000 |
| **Label holder** | |
| 70 x 70 angled stainless steel 1.4301 | 1279320000 |
| 130x50 stainless steel 1.4301 | 1283450000 |
| 100x25 stainless steel 1.4301 | 1257640000 |
| **Document holder** | |
| For DIN A6 size documents | 1252780000 |
| For DIN A5 size documents | 1252750000 |
| For DIN A4 size documents | 1252730000 |
| **Set of fixings** | |
| For label holders, rain hoods and document holders (rivet) | 1252190000 |
| For plastic (Trafolyte), identification plate (screw) | 1285200000 |
| **Earthing stud** | |
| Stainless steel 1.4404 | 1192690000 |
| **Padlock with two keys** | |
| Stainless steel 1.4301 | 0905680000 |

**Note**

### Max. number of terminals (industry)

| Max. number of terminals (industry) | vertical | horizontal |
|---|---|---|
| 2.5 mm² | 4x78 | 4x77 |
| 4 mm² | 3x65 | 3x64 |
| 6 mm² | 3x49 | 3x48 |
| 10 mm² | 2x39 | 3x39 |
| 16 mm² | 2x33 | 2x32 |
| 35 mm² | 1x25 | 2x24 |

**Note** *For enclosure versions with zero, one or two gland plates, the horizontal gap between the mounting feet is reduced by 30 mm.
Assembly with terminal blocks provides for 10 mm clearance to the ends of the mounting rail.
Recommended order:
TS 35 mounting rail (screw terminal) WDU 2.5 1020000000 / (tension clamp terminal) ZDU 2.5 1608510000 / (tension clamp terminal) PDU 2.5 1896110000
TS 32 mounting rail (screw terminal) SAK 2.5 0279660000
TS 15 mounting rail (screw terminal) AKZ 2.5 0697160000

### Number of cable entries

| Number of cable entries | A / B | C / D |
|---|---|---|
| M12 | 65 | 60 |
| M16 | 44 | 40 |
| M20 | 29 | 26 |
| M25 | 24 | 21 |
| M32 | 13 | 12 |
| M40 | 11 | 10 |
| M50 | 5 | 4 |
| M63 | 4 | 4 |
| M75 | 3 | 3 |

**Note** Our IP 68 brass cable glands are used as the reference for these guideline values.

### Dimensions of mounting plate

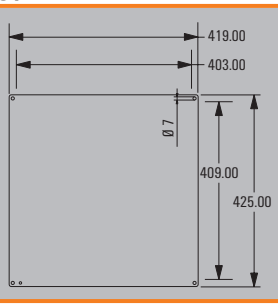

## Klippon® TB MH 553515

**Depth** 150 mm

| | |
|---|---|
| Height/Width/Depth | 550 / 350 / 150 mm |

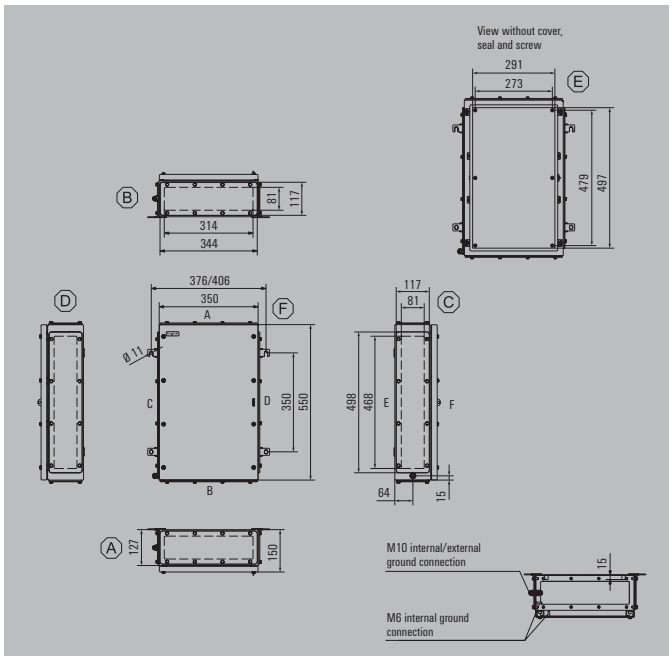


## Ordering data

| Stainless steel 1.4404 316L, electropolished | Order No. |
|---|---|
| 1 gland plate - bottom side (B) | 1195210000 |
| 2 gland plates - top and bottom sides (A & B) | 1195220000 |
| 3 gland plates - bottom, left and right sides (B, C & D) | 1195230000 |
| 4 gland plates - top, bottom, left and right sides (A, B, C & D) | 1195240000 |
| **Note** | Painted sheet steel enclosure available on request. Standard colour is similar to RAL 7035. |

## Accessories

| Mounting plates and fastening screws | Order No. |
|---|---|
| Steel sheet, zinc plated | 1194010000 |
| Stainless steel 1.4301 | 1193880000 |
| With hole pattern, natural stainless steel 1.4301 | 1257720000 |
| Fastening screws for mounting plates | 0642600000 |
| Fastening screws for terminal rails | 1274150000 |
| **Stainless steel spacer M6 x 8, Set of 4** | |
| 10 mm length | 0935110000 |
| 15 mm length | 0935120000 |
| 20 mm length | 0935130000 |
| 30 mm length | 0935140000 |
| **Gland plates and screws - 6 mm** | |
| Top and bottom sides (A & B), electropolished stainless steel 1.4404 | 1256570000 |
| Left and right sides (C & D), electropolished stainless steel 1.4404 | 1256580000 |
| Mounting screw, stainless steel 1.4404 | 1253230000 |
| **Mirror-polish Stainless steel 1.4301 rain hood (2R)** | |
| | 1281490000 |
| **Label holder** | |
| 70 x 70 angled stainless steel 1.4301 | 1279320000 |
| 130x50 stainless steel 1.4301 | 1283450000 |
| 100x25 stainless steel 1.4301 | 1257640000 |
| **Document holder** | |
| For DIN A6 size documents | 1252780000 |
| For DIN A5 size documents | 1252750000 |
| For DIN A4 size documents | 1252730000 |
| **Set of fixings** | |
| For label holders, rain hoods and document holders (rivet) | 1252190000 |
| For plastic (Trafolyte), identification plate (screw) | 1285200000 |
| **Earthing stud** | |
| Stainless steel 1.4404 | 1192690000 |
| **Padlock with two keys** | |
| Stainless steel 1.4301 | 0905680000 |

**Note**

## Max. number of terminals (industry)

| Max. number of terminals (industry) | vertical | horizontal |
|---|---|---|
| 2.5 mm² | 2x91 | 4x52 |
| 4 mm² | 2x76 | 4x43 |
| 6 mm² | 2x58 | 4x32 |
| 10 mm² | 2x46 | 3x26 |
| 16 mm² | 1x39 | 3x22 |
| 35 mm² | 1x29 | 2x16 |

**Note**

*For enclosure versions with zero, one or two gland plates, the horizontal gap between the mounting feet is reduced by 30 mm.
Assembly with terminal blocks provides for 10 mm clearance to the ends of the mounting rail.
Recommended order:
TS 35 mounting rail (screw terminal) WDU 2.5 1020000000 / (tension clamp terminal) ZDU 2.5 1608510000 / (tension clamp terminal) PDU 2.5 1896110000
TS 32 mounting rail (screw terminal) SAK 2.5 0279660000
TS 15 mounting rail (screw terminal) AKZ 2.5 0697160000

## Number of cable entries

| Number of cable entries | A / B | C / D |
|---|---|---|
| M12 | 27 | 42 |
| M16 | 15 | 24 |
| M20 | 13 | 20 |
| M25 | 6 | 9 |
| M32 | 5 | 7 |
| M40 | 4 | 6 |
| M50 | 3 | 5 |
| M63 | 0 | 0 |
| M75 | 0 | 0 |

**Note** Our IP 68 brass cable glands are used as the reference for these guideline values.

## Dimensions of mounting plate

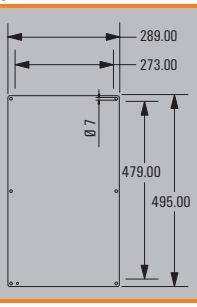

## Klippon® TB MH 553520

**Depth** 200 mm

| Height/Width/Depth | 550 / 350 / 200 mm |
|---|---|

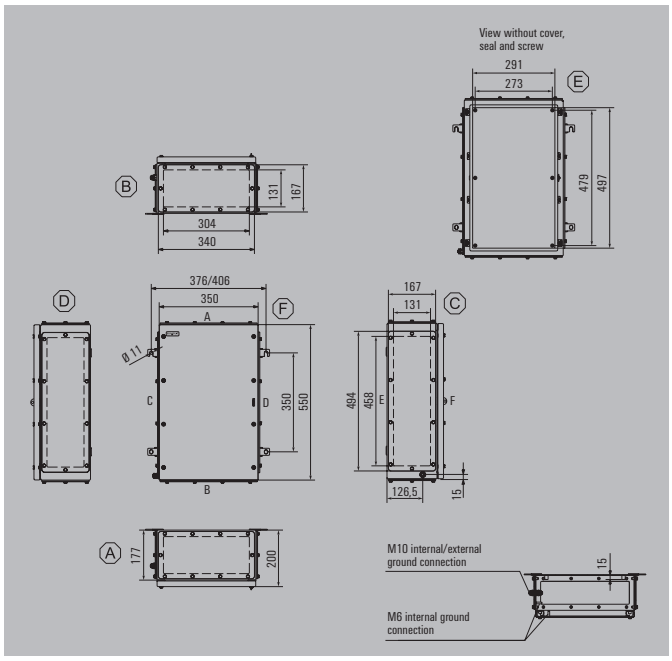


### Ordering data

| Stainless steel 1.4404 316L, electropolished | Order No. |
|---|---|
| 1 gland plate - bottom side (B) | 1195260000 |
| 2 gland plates - top and bottom sides (A & B) | 1195270000 |
| 3 gland plates - bottom, left and right sides (B, C & D) | 1195280000 |
| 4 gland plates - top, bottom, left and right sides (A, B, C & D) | 1195290000 |
| **Note** | Painted sheet steel enclosure available on request. Standard colour is similar to RAL 7035. |

### Accessories

| Mounting plates and fastening screws | Order No. |
|---|---|
| Steel sheet, zinc plated | 1194010000 |
| Stainless steel 1.4301 | 1193880000 |
| With hole pattern, natural stainless steel 1.4301 | 1257720000 |
| Fastening screws for mounting plates | 0642600000 |
| Fastening screws for terminal rails | 1274150000 |
| **Stainless steel spacer M6 x 8, Set of 4** | |
| 10 mm length | 0935110000 |
| 15 mm length | 0935120000 |
| 20 mm length | 0935130000 |
| 30 mm length | 0935140000 |
| **Gland plates and screws - 6 mm** | |
| Top and bottom sides (A & B), electropolished stainless steel 1.4404 | 1256590000 |
| Left and right sides (C & D), electropolished stainless steel 1.4404 | 1256610000 |
| Mounting screw, stainless steel 1.4404 | 1253230000 |
| **Mirror-polish Stainless steel 1.4301 rain hood (2R)** | |
| | 1281500000 |
| **Label holder** | |
| 70 x 70 angled stainless steel 1.4301 | 1279320000 |
| 130x50 stainless steel 1.4301 | 1283450000 |
| 100x25 stainless steel 1.4301 | 1257640000 |
| **Document holder** | |
| For DIN A6 size documents | 1252780000 |
| For DIN A5 size documents | 1252750000 |
| For DIN A4 size documents | 1252730000 |
| **Set of fixings** | |
| For label holders, rain hoods and document holders (rivet) | 1252190000 |
| For plastic (Trafolyte), identification plate (screw) | 1285200000 |
| **Earthing stud** | |
| Stainless steel 1.4404 | 1192690000 |
| **Padlock with two keys** | |
| Stainless steel 1.4301 | 0905680000 |

**Note**

### Max. number of terminals (industry)

| Max. number of terminals (industry) | vertical | horizontal |
|---|---|---|
| 2.5 mm² | 2x91 | 4x52 |
| 4 mm² | 2x76 | 4x43 |
| 6 mm² | 2x58 | 4x32 |
| 10 mm² | 2x46 | 3x26 |
| 16 mm² | 1x39 | 3x22 |
| 35 mm² | 1x29 | 2x16 |

**Note**

*For enclosure versions with zero, one or two gland plates, the horizontal gap between the mounting feet is reduced by 30 mm.
Assembly with terminal blocks provides for 10 mm clearance to the ends of the mounting rail.
Recommended order:
TS 35 mounting rail (screw terminal) WDU 2.5 1020000000 / (tension clamp terminal) ZDU 2.5 1608510000 / (tension clamp terminal) PDU 2.5 1896110000
TS 32 mounting rail (screw terminal) SAK 2.5 0279660000
TS 15 mounting rail (screw terminal) AKZ 2.5 0697160000

### Number of cable entries

| Number of cable entries | A / B | C / D |
|---|---|---|
| M12 | 45 | 70 |
| M16 | 30 | 48 |
| M20 | 20 | 30 |
| M25 | 17 | 26 |
| M32 | 9 | 14 |
| M40 | 7 | 12 |
| M50 | 3 | 5 |
| M63 | 3 | 4 |
| M75 | 2 | 3 |

**Note** Our IP 68 brass cable glands serve as a reference for these recommended values.

### Dimensions of mounting plate

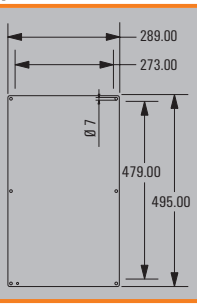

## Klippon® TB MH 624515

**Depth** 150 mm

| Height/Width/Depth | 620 / 450 / 150 mm |
|---|---|

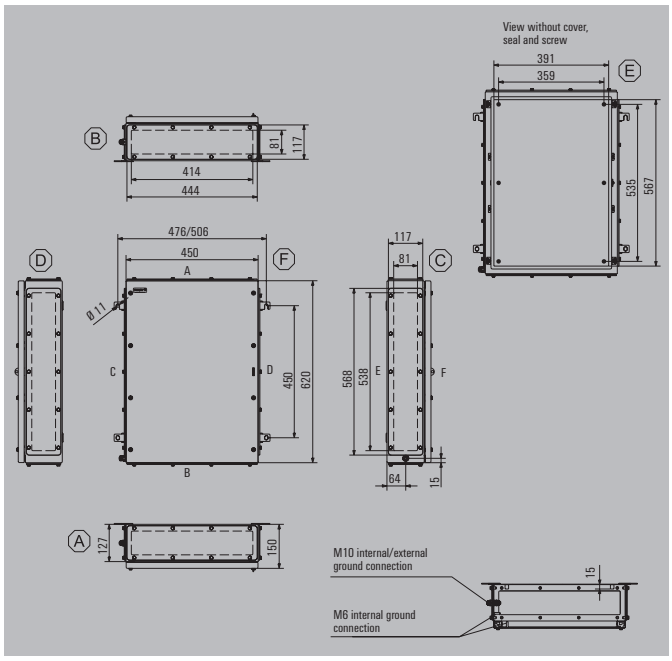


## Ordering data

| Stainless steel 1.4404 316L, electropolished | Order No. |
|---|---|
| 1 gland plate - bottom side (B) | 1195310000 |
| 2 gland plates - top and bottom sides (A & B) | 1195320000 |
| 3 gland plates - bottom, left and right sides (B, C & D) | 1195330000 |
| 4 gland plates - top, bottom, left and right sides (A, B, C & D) | 1195340000 |
| **Note** | Painted sheet steel enclosure available on request. Standard colour is similar to RAL 7035. |

## Max. number of terminals (industry)

| Max. number of terminals (industry) | vertical | horizontal |
|---|---|---|
| 2.5 mm² | 3x105 | 5x71 |
| 4 mm² | 3x88 | 5x59 |
| 6 mm² | 3x66 | 4x45 |
| 10 mm² | 2x53 | 4x36 |
| 16 mm² | 2x44 | 3x30 |
| 35 mm² | 1x33 | 2x22 |

**Note**

*For enclosure versions with zero, one or two gland plates, the horizontal gap between the mounting feet is reduced by 30 mm.
Assembly with terminal blocks provides for 10 mm clearance to the ends of the mounting rail.
Recommended order:
TS 35 mounting rail (screw terminal) WDU 2.5 1020000000 / (tension clamp terminal) ZDU 2.5 1608510000 / (tension clamp terminal) PDU 2.5 1896110000
TS 32 mounting rail (screw terminal) SAK 2.5 0279660000
TS 15 mounting rail (screw terminal) AKZ 2.5 0697160000

## Accessories

| Mounting plates and fastening screws | Order No. |
|---|---|
| Steel sheet, zinc plated | 1194020000 |
| Stainless steel 1.4301 | 1193890000 |
| With hole pattern, natural stainless steel 1.4301 | 1257740000 |
| Fastening screws for mounting plates | 0642600000 |
| Fastening screws for terminal rails | 1274150000 |
| **Stainless steel spacer M6 x 8, Set of 4** | |
| 10 mm length | 0935110000 |
| 15 mm length | 0935120000 |
| 20 mm length | 0935130000 |
| 30 mm length | 0935140000 |
| **Gland plates and screws - 6 mm** | |
| Top and bottom sides (A & B), electropolished stainless steel 1.4404 | 1256620000 |
| Left and right sides (C & D), electropolished stainless steel 1.4404 | 1256630000 |
| Mounting screw, stainless steel 1.4404 | 1253230000 |
| **Mirror-polish Stainless steel 1.4301 rain hood (2R)** | |
| | 1281510000 |
| **Label holder** | |
| 70 x 70 angled stainless steel 1.4301 | 1279320000 |
| 130x50 stainless steel 1.4301 | 1283450000 |
| 100x25 stainless steel 1.4301 | 1257640000 |
| **Document holder** | |
| For DIN A6 size documents | 1252780000 |
| For DIN A5 size documents | 1252750000 |
| For DIN A4 size documents | 1252730000 |
| **Set of fixings** | |
| For label holders, rain hoods and document holders (rivet) | 1252190000 |
| For plastic (Trafolyte), identification plate (screw) | 1285200000 |
| **Earthing stud** | |
| Stainless steel 1.4404 | 1192690000 |
| **Padlock with two keys** | |
| Stainless steel 1.4301 | 0905680000 |

**Note**

## Number of cable entries

| Number of cable entries | A / B | C / D |
|---|---|---|
| M12 | 38 | 48 |
| M16 | 21 | 27 |
| M20 | 18 | 24 |
| M25 | 8 | 10 |
| M32 | 6 | 9 |
| M40 | 5 | 7 |
| M50 | 4 | 6 |
| M63 | 0 | 0 |
| M75 | 0 | 0 |

**Note** Our IP 68 brass cable glands serve as a reference for these recommended values.

## Dimensions of mounting plate

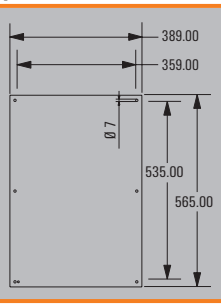

## Klippon® TB MH 624520

**Depth** 200 mm

| Height/Width/Depth | 620 / 450 / 200 mm |
|---|---|

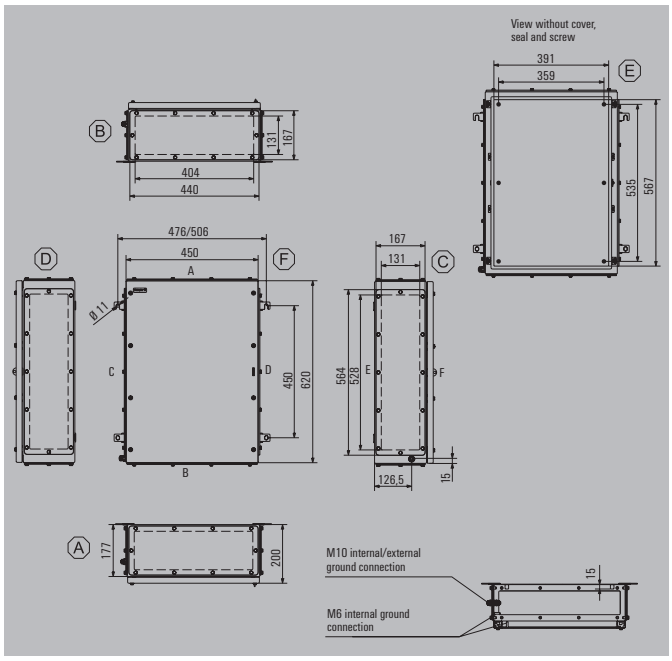


### Ordering data

| Stainless steel 1.4404 316L, electropolished | Order No. |
|---|---|
| 1 gland plate - bottom side (B) | 1195360000 |
| 2 gland plates - top and bottom sides (A & B) | 1195370000 |
| 3 gland plates - bottom, left and right sides (B, C & D) | 1195380000 |
| 4 gland plates - top, bottom, left and right sides (A, B, C & D) | 1195390000 |
| **Note** Painted sheet steel enclosure available on request. Standard colour is similar to RAL 7035. | |

### Accessories

| Mounting plates and fastening screws | Order No. |
|---|---|
| Steel sheet, zinc plated | 1194020000 |
| Stainless steel 1.4301 | 1193890000 |
| With hole pattern, natural stainless steel 1.4301 | 1257740000 |
| Fastening screws for mounting plates | 0642600000 |
| Fastening screws for terminal rails | 1274150000 |
| **Stainless steel spacer M6 x 8, Set of 4** | |
| 10 mm length | 0935110000 |
| 15 mm length | 0935120000 |
| 20 mm length | 0935130000 |
| 30 mm length | 0935140000 |
| **Gland plates and screws - 6 mm** | |
| Top and bottom sides (A & B), electropolished stainless steel 1.4404 | 1256640000 |
| Left and right sides (C & D), electropolished stainless steel 1.4404 | 1256650000 |
| Mounting screw, stainless steel 1.4404 | 1253230000 |
| **Mirror-polish Stainless steel 1.4301 rain hood (2R)** | |
| | 1281520000 |
| **Label holder** | |
| 70 x 70 angled stainless steel 1.4301 | 1279320000 |
| 130x50 stainless steel 1.4301 | 1283450000 |
| 100x25 stainless steel 1.4301 | 1257640000 |
| **Document holder** | |
| For DIN A6 size documents | 1252780000 |
| For DIN A5 size documents | 1252750000 |
| For DIN A4 size documents | 1252730000 |
| **Set of fixings** | |
| For label holders, rain hoods and document holders (rivet) | 1252190000 |
| For plastic (Trafolyte), identification plate (screw) | 1285200000 |
| **Earthing stud** | |
| Stainless steel 1.4404 | 1192690000 |
| **Padlock with two keys** | |
| Stainless steel 1.4301 | 0905680000 |

**Note**

### Max. number of terminals (industry)

| Max. number of terminals (industry) | vertical | horizontal |
|---|---|---|
| 2.5 mm² | 3x105 | 5x71 |
| 4 mm² | 3x88 | 5x59 |
| 6 mm² | 3x66 | 4x45 |
| 10 mm² | 2x53 | 4x36 |
| 16 mm² | 2x44 | 3x30 |
| 35 mm² | 1x33 | 2x22 |

**Note** *For enclosure versions with zero, one or two gland plates, the horizontal gap between the mounting feet is reduced by 30 mm.
Assembly with terminal blocks provides for 10 mm clearance to the ends of the mounting rail.
Recommended order:
TS 35 mounting rail (screw terminal) WDU 2.5 1020000000 / (tension clamp terminal) ZDU 2.5 1608510000 / (tension clamp terminal) PDU 2.5 1896110000
TS 32 mounting rail (screw terminal) SAK 2.5 0279660000
TS 15 mounting rail (screw terminal) AKZ 2.5 0697160000

### Number of cable entries

| Number of cable entries | A / B | C / D |
|---|---|---|
| M12 | 63 | 80 |
| M16 | 42 | 54 |
| M20 | 27 | 36 |
| M25 | 23 | 30 |
| M32 | 12 | 17 |
| M40 | 10 | 14 |
| M50 | 4 | 6 |
| M63 | 4 | 5 |
| M75 | 3 | 4 |

**Note** Our IP 68 brass cable glands are used as the reference for these guideline values.

### Dimensions of mounting plate

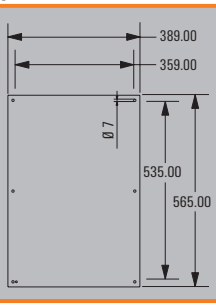

## Klippon® TB MH 765015

**Depth** 150 mm

| Height/Width/Depth | 762 / 508 / 150 mm |
|---|---|

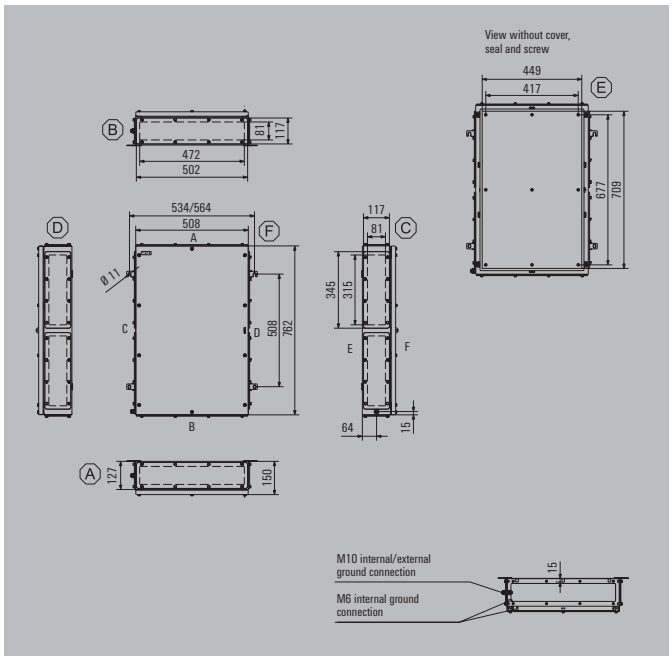


### Ordering data

| Stainless steel 1.4404 316L, electropolished | Order No. |
|---|---|
| 1 gland plate - bottom side (B) | 1195410000 |
| 2 gland plates - top and bottom sides (A & B) | 1195420000 |
| 3 gland plates - bottom, left and right sides (B, C & D) | 1195430000 |
| 4 gland plates - top, bottom, left and right sides (A, B, C & D) | 1195440000 |
| **Note** Painted sheet steel enclosure available on request. Standard colour is similar to RAL 7035. | |

### Accessories

| Mounting plates and fastening screws | Order No. |
|---|---|
| Steel sheet, zinc plated | 1194030000 |
| Stainless steel 1.4301 | 1193900000 |
| With hole pattern, natural stainless steel 1.4301 | 1257750000 |
| Fastening screws for mounting plates | 0642600000 |
| Fastening screws for terminal rails | 1274150000 |
| **Stainless steel spacer M6 x 8, Set of 4** | |
| 10 mm length | 0935110000 |
| 15 mm length | 0935120000 |
| 20 mm length | 0935130000 |
| 30 mm length | 0935140000 |
| **Gland plates and screws - 6 mm** | |
| Top and bottom sides (A & B), electropolished stainless steel 1.4404 | 1256660000 |
| Left and right sides (C & D), electropolished stainless steel 1.4404 | 1256670000 |
| Mounting screw, stainless steel 1.4404 | 1253230000 |
| **Mirror-polish Stainless steel 1.4301 rain hood (2R)** | |
| | 1281530000 |
| **Label holder** | |
| 70 x 70 angled stainless steel 1.4301 | 1279320000 |
| 130x50 stainless steel 1.4301 | 1283450000 |
| 100x25 stainless steel 1.4301 | 1257640000 |
| **Document holder** | |
| For DIN A6 size documents | 1252780000 |
| For DIN A5 size documents | 1252750000 |
| For DIN A4 size documents | 1252730000 |
| **Set of fixings** | |
| For label holders, rain hoods and document holders (rivet) | 1252190000 |
| For plastic (Trafolyte), identification plate (screw) | 1285200000 |
| **Earthing stud** | |
| Stainless steel 1.4404 | 1192690000 |
| **Padlock with two keys** | |
| Stainless steel 1.4301 | 0905680000 |

**Note**

### Max. number of terminals (industry)

| Max. number of terminals (industry) | vertical | horizontal |
|---|---|---|
| 2.5 mm² | 4x132 | 7x82 |
| 4 mm² | 4x111 | 6x69 |
| 6 mm² | 3x83 | 5x52 |
| 10 mm² | 3x67 | 5x42 |
| 16 mm² | 2x56 | 4x35 |
| 35 mm² | 2x42 | 3x26 |

**Note**

*For enclosure versions with zero, one or two gland plates, the horizontal gap between the mounting feet is reduced by 30 mm.
Assembly with terminal blocks provides for 10 mm clearance to the ends of the mounting rail.
Recommended order:
TS 35 mounting rail (screw terminal) WDU 2.5 1020000000 / (tension clamp terminal) ZDU 2.5 1608510000 / (tension clamp terminal) PDU 2.5 1896110000
TS 32 mounting rail (screw terminal) SAK 2.5 0279660000
TS 15 mounting rail (screw terminal) AKZ 2.5 0697160000

### Number of cable entries

| Number of cable entries | A / B | C / D |
|---|---|---|
| M12 | 42 | 58 |
| M16 | 24 | 32 |
| M20 | 21 | 26 |
| M25 | 9 | 12 |
| M32 | 7 | 10 |
| M40 | 6 | 8 |
| M50 | 5 | 6 |
| M63 | 0 | 0 |
| M75 | 0 | 0 |

**Note** Our IP 68 brass cable glands serve as a reference for these recommended values.

### Dimensions of mounting plate

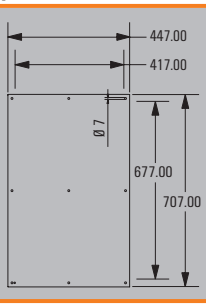

## Klippon® TB MH 765020

**Depth** 200 mm

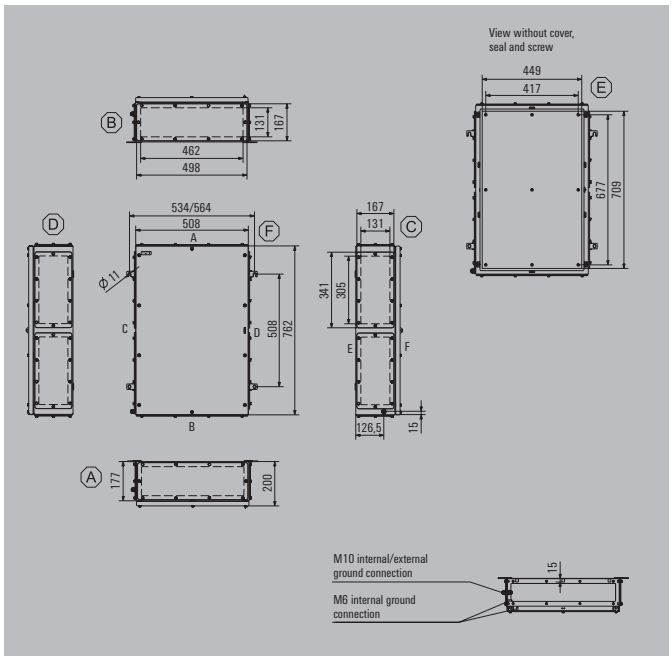


| | |
|---|---|
| Height/Width/Depth | 762 / 508 / 200 mm |

### Ordering data

| Stainless steel 1.4404 316L, electropolished | Order No. |
|---|---|
| 1 gland plate - bottom side (B) | 1195460000 |
| 2 gland plates - top and bottom sides (A & B) | 1195470000 |
| 3 gland plates - bottom, left and right sides (B, C & D) | 1195480000 |
| 4 gland plates - top, bottom, left and right sides (A, B, C & D) | 1195490000 |

**Note** Painted sheet steel enclosure available on request. Standard colour is similar to RAL 7035.

### Accessories

| Mounting plates and fastening screws | Order No. |
|---|---|
| Steel sheet, zinc plated | 1194030000 |
| Stainless steel 1.4301 | 1193900000 |
| With hole pattern, natural stainless steel 1.4301 | 1257750000 |
| Fastening screws for mounting plates | 0642600000 |
| Fastening screws for terminal rails | 1274150000 |
| **Stainless steel spacer M6 x 8, Set of 4** | |
| 10 mm length | 0935110000 |
| 15 mm length | 0935120000 |
| 20 mm length | 0935130000 |
| 30 mm length | 0935140000 |
| **Gland plates and screws - 6 mm** | |
| Top and bottom sides (A & B), electropolished stainless steel 1.4404 | 1256680000 |
| Left and right sides (C & D), electropolished stainless steel 1.4404 | 1256690000 |
| Mounting screw, stainless steel 1.4404 | 1253230000 |
| **Mirror-polish Stainless steel 1.4301 rain hood (2R)** | |
| | 1281540000 |
| **Label holder** | |
| 70 x 70 angled stainless steel 1.4301 | 1279320000 |
| 130x50 stainless steel 1.4301 | 1283450000 |
| 100x25 stainless steel 1.4301 | 1257640000 |
| **Document holder** | |
| For DIN A6 size documents | 1252780000 |
| For DIN A5 size documents | 1252750000 |
| For DIN A4 size documents | 1252730000 |
| **Set of fixings** | |
| For label holders, rain hoods and document holders (rivet) | 1252190000 |
| For plastic (Trafolyte), identification plate (screw) | 1285200000 |
| **Earthing stud** | |
| Stainless steel 1.4404 | 1192690000 |
| **Padlock with two keys** | |
| Stainless steel 1.4301 | 0905680000 |

**Note**

### Max. number of terminals (industry)

| Max. number of terminals (industry) | vertical | horizontal |
|---|---|---|
| 2.5 mm² | 4x132 | 7x82 |
| 4 mm² | 4x111 | 6x69 |
| 6 mm² | 3x83 | 5x52 |
| 10 mm² | 3x67 | 5x42 |
| 16 mm² | 2x56 | 4x35 |
| 35 mm² | 2x42 | 3x26 |

**Note** *For enclosure versions with zero, one or two gland plates, the horizontal gap between the mounting feet is reduced by 30 mm.
Assembly with terminal blocks provides for 10 mm clearance to the ends of the mounting rail.
Recommended order:
TS 35 mounting rail (screw terminal) WDU 2.5 1020000000 / (tension clamp terminal) ZDU 2.5 1608510000 / (tension clamp terminal) PDU 2.5 1896110000
TS 32 mounting rail (screw terminal) SAK 2.5 0279660000
TS 15 mounting rail (screw terminal) AKZ 2.5 0697160000

### Number of cable entries

| Number of cable entries | A / B | C / D |
|---|---|---|
| M12 | 70 | 96 |
| M16 | 48 | 64 |
| M20 | 32 | 40 |
| M25 | 26 | 34 |
| M32 | 14 | 18 |
| M40 | 12 | 14 |
| M50 | 5 | 6 |
| M63 | 4 | 6 |
| M75 | 3 | 4 |

**Note** Our IP 68 brass cable glands are used as the reference for these guideline values.

### Dimensions of mounting plate

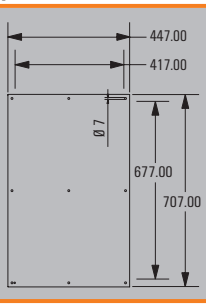

## Klippon® TB MH 916115

**Depth** 150 mm

| Height/Width/Depth | 914 / 610 / 150 mm |
|---|---|

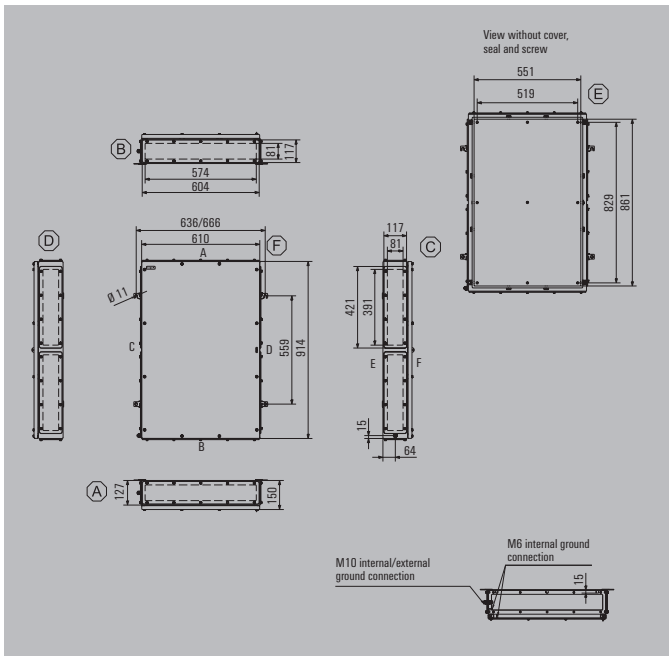


### Ordering data

| Stainless steel 1.4404 316L, electropolished | Order No. |
|---|---|
| 1 gland plate - bottom side (B) | 1195510000 |
| 2 gland plates - top and bottom sides (A & B) | 1195520000 |
| 3 gland plates - bottom, left and right sides (B, C & D) | 1195530000 |
| 4 gland plates - top, bottom, left and right sides (A, B, C & D) | 1195540000 |
| **Note** Painted sheet steel enclosure available on request. Standard colour is similar to RAL 7035. | |

### Accessories

| Mounting plates and fastening screws | Order No. |
|---|---|
| Steel sheet, zinc plated | 1194040000 |
| Stainless steel 1.4301 | 1193910000 |
| With hole pattern, natural stainless steel 1.4301 | 1257760000 |
| Fastening screws for mounting plates | 0642600000 |
| Fastening screws for terminal rails | 1274150000 |
| **Stainless steel spacer M6 x 8, Set of 4** | |
| 10 mm length | 0935110000 |
| 15 mm length | 0935120000 |
| 20 mm length | 0935130000 |
| 30 mm length | 0935140000 |
| **Gland plates and screws - 6 mm** | |
| Top and bottom sides (A & B), electropolished stainless steel 1.4404 | 1256710000 |
| Left and right sides (C & D), electropolished stainless steel 1.4404 | 1256720000 |
| Mounting screw, stainless steel 1.4404 | 1253230000 |
| **Mirror-polish Stainless steel 1.4301 rain hood (2R)** | |
| | 1281550000 |
| **Label holder** | |
| 70 x 70 angled stainless steel 1.4301 | 1279320000 |
| 130x50 stainless steel 1.4301 | 1283450000 |
| 100x25 stainless steel 1.4301 | 1257640000 |
| **Document holder** | |
| For DIN A6 size documents | 1252780000 |
| For DIN A5 size documents | 1252750000 |
| For DIN A4 size documents | 1252730000 |
| **Set of fixings** | |
| For label holders, rain hoods and document holders (rivet) | 1252190000 |
| For plastic (Trafolyte), identification plate (screw) | 1285200000 |
| **Earthing stud** | |
| Stainless steel 1.4404 | 1192690000 |
| **Padlock with two keys** | |
| Stainless steel 1.4301 | 0905680000 |

**Note**

### Max. number of terminals (industry)

| Max. number of terminals (industry) | vertical | horizontal |
|---|---|---|
| 2.5 mm² | 5x161 | 8x102 |
| 4 mm² | 4x135 | 7x85 |
| 6 mm² | 4x102 | 7x64 |
| 10 mm² | 3x82 | 6x52 |
| 16 mm² | 3x68 | 5x43 |
| 35 mm² | 2x51 | 4x32 |

**Note**

*For enclosure versions with zero, one or two gland plates, the horizontal gap between the mounting feet is reduced by 30 mm.
Assembly with terminal blocks provides for 10 mm clearance to the ends of the mounting rail.
Recommended order:
TS 35 mounting rail (screw terminal) WDU 2.5 1020000000 / (tension clamp terminal) ZDU 2.5 1608510000 / (tension clamp terminal) PDU 2.5 1896110000
TS 32 mounting rail (screw terminal) SAK 2.5 0279660000
TS 15 mounting rail (screw terminal) AKZ 2.5 0697160000

### Number of cable entries

| Number of cable entries | A / B | C / D |
|---|---|---|
| M12 | 53 | 70 |
| M16 | 29 | 40 |
| M20 | 25 | 34 |
| M25 | 11 | 14 |
| M32 | 9 | 12 |
| M40 | 8 | 10 |
| M50 | 6 | 8 |
| M63 | 0 | 0 |
| M75 | 0 | 0 |

**Note** Our IP 68 brass cable glands serve as a reference for these recommended values.

### Dimensions of mounting plate

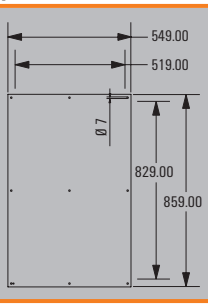

## Klippon® TB MH 916120

**Depth** 200 mm

| Height/Width/Depth | 914 / 610 / 200 mm |
|---|---|

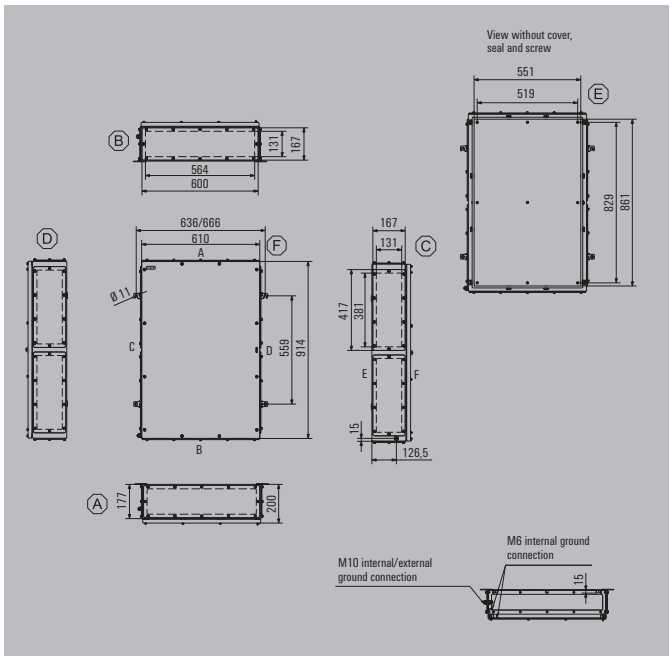


### Ordering data

| Stainless steel 1.4404 316L, electropolished | Order No. |
|---|---|
| 1 gland plate - bottom side (B) | 1195560000 |
| 2 gland plates - top and bottom sides (A & B) | 1195570000 |
| 3 gland plates - bottom, left and right sides (B, C & D) | 1195580000 |
| 4 gland plates - top, bottom, left and right sides (A, B, C & D) | 1195590000 |
| **Note** | Painted sheet steel enclosure available on request. Standard colour is similar to RAL 7035. |

### Accessories

| Mounting plates and fastening screws | Order No. |
|---|---|
| Steel sheet, zinc plated | 1194040000 |
| Stainless steel 1.4301 | 1193910000 |
| With hole pattern, natural stainless steel 1.4301 | 1257760000 |
| Fastening screws for mounting plates | 0642600000 |
| Fastening screws for terminal rails | 1274150000 |
| **Stainless steel spacer M6 x 8, Set of 4** | |
| 10 mm length | 0935110000 |
| 15 mm length | 0935120000 |
| 20 mm length | 0935130000 |
| 30 mm length | 0935140000 |
| **Gland plates and screws - 6 mm** | |
| Top and bottom sides (A & B), electropolished stainless steel 1.4404 | 1256730000 |
| Left and right sides (C & D), electropolished stainless steel 1.4404 | 1256740000 |
| Mounting screw, stainless steel 1.4404 | 1253230000 |
| **Mirror-polish Stainless steel 1.4301 rain hood (2R)** | |
| | 1281570000 |
| **Label holder** | |
| 70 x 70 angled stainless steel 1.4301 | 1279320000 |
| 130x50 stainless steel 1.4301 | 1283450000 |
| 100x25 stainless steel 1.4301 | 1257640000 |
| **Document holder** | |
| For DIN A6 size documents | 1252780000 |
| For DIN A5 size documents | 1252750000 |
| For DIN A4 size documents | 1252730000 |
| **Set of fixings** | |
| For label holders, rain hoods and document holders (rivet) | 1252190000 |
| For plastic (Trafolyte), identification plate (screw) | 1285200000 |
| **Earthing stud** | |
| Stainless steel 1.4404 | 1192690000 |
| **Padlock with two keys** | |
| Stainless steel 1.4301 | 0905680000 |

**Note**

### Max. number of terminals (industry)

| Max. number of terminals (industry) | vertical | horizontal |
|---|---|---|
| 2.5 mm² | 5x161 | 8x102 |
| 4 mm² | 4x135 | 7x85 |
| 6 mm² | 4x102 | 7x64 |
| 10 mm² | 3x82 | 6x52 |
| 16 mm² | 3x68 | 5x43 |
| 35 mm² | 2x51 | 4x32 |

**Note**

*For enclosure versions with zero, one or two gland plates, the horizontal gap between the mounting feet is reduced by 30 mm.
Assembly with terminal blocks provides for 10 mm clearance to the ends of the mounting rail.
Recommended order:
TS 35 mounting rail (screw terminal) WDU 2.5 1020000000 / (tension clamp terminal) ZDU 2.5 1608510000 / (tension clamp terminal) PDU 2.5 1896110000
TS 32 mounting rail (screw terminal) SAK 2.5 0279660000
TS 15 mounting rail (screw terminal) AKZ 2.5 0697160000

### Number of cable entries

| Number of cable entries | A / B | C / D |
|---|---|---|
| M12 | 88 | 116 |
| M16 | 58 | 80 |
| M20 | 38 | 52 |
| M25 | 33 | 42 |
| M32 | 18 | 24 |
| M40 | 15 | 20 |
| M50 | 6 | 8 |
| M63 | 5 | 6 |
| M75 | 4 | 6 |

**Note** Our IP 68 brass cable glands are used as the reference for these guideline values.

### Dimensions of mounting plate

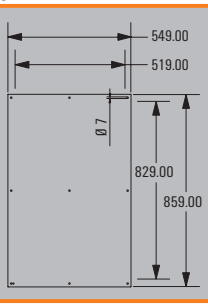

## Klippon® TB MH 987420

**Depth** 200 mm

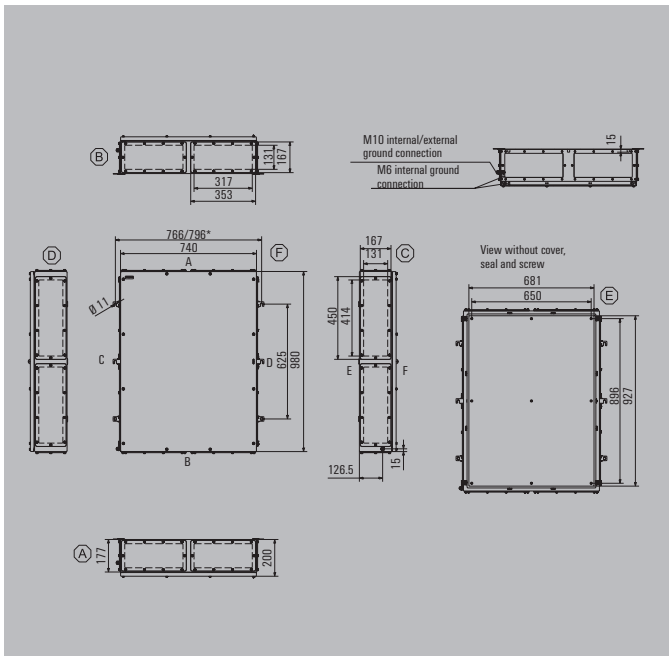


| Height/Width/Depth | 980 / 740 / 200 mm |
|---|---|

### Ordering data

| Stainless steel 1.4404 316L, electropolished | Order No. |
|---|---|
| 1 gland plate - bottom side (B) | 1195610000 |
| 2 gland plates - top and bottom sides (A & B) | 1195620000 |
| 3 gland plates - bottom, left and right sides (B, C & D) | 1195630000 |
| 4 gland plates - top, bottom, left and right sides (A, B, C & D) | 1195640000 |
| **Note** Painted sheet steel enclosure available on request. Standard colour is similar to RAL 7035. | |

### Accessories

| Mounting plates and fastening screws | Order No. |
|---|---|
| Steel sheet, zinc plated | 1194050000 |
| Stainless steel 1.4301 | 1193920000 |
| With hole pattern, natural stainless steel 1.4301 | 1257770000 |
| Fastening screws for mounting plates | 0642600000 |
| Fastening screws for terminal rails | 1274150000 |
| **Stainless steel spacer M6 x 8, Set of 4** | |
| 10 mm length | 0935110000 |
| 15 mm length | 0935120000 |
| 20 mm length | 0935130000 |
| 30 mm length | 0935140000 |
| **Gland plates and screws - 6 mm** | |
| Top and bottom sides (A & B), electropolished stainless steel 1.4404 | 1256750000 |
| Left and right sides (C & D), electropolished stainless steel 1.4404 | 1256760000 |
| Mounting screw, stainless steel 1.4404 | 1253230000 |
| **Mirror-polish Stainless steel 1.4301 rain hood (2R)** | |
| | 1281580000 |
| **Label holder** | |
| 70 x 70 angled stainless steel 1.4301 | 1279320000 |
| 130x50 stainless steel 1.4301 | 1283450000 |
| 100x25 stainless steel 1.4301 | 1257640000 |
| **Document holder** | |
| For DIN A6 size documents | 1252780000 |
| For DIN A5 size documents | 1252750000 |
| For DIN A4 size documents | 1252730000 |
| **Set of fixings** | |
| For label holders, rain hoods and document holders (rivet) | 1252190000 |
| For plastic (Trafolyte), identification plate (screw) | 1285200000 |
| **Earthing stud** | |
| Stainless steel 1.4404 | 1192690000 |
| **Padlock with two keys** | |
| Stainless steel 1.4301 | 0905680000 |

**Note**

### Max. number of terminals (industry)

| Max. number of terminals (industry) | vertical | horizontal |
|---|---|---|
| 2.5 mm² | 6x174 | 9x127 |
| 4 mm² | 6x146 | 8x106 |
| 6 mm² | 5x110 | 7x80 |
| 10 mm² | 4x88 | 6x64 |
| 16 mm² | 4x74 | 5x54 |
| 35 mm² | 3x55 | 4x40 |

**Note**

*For enclosure versions with zero, one or two gland plates, the horizontal gap between the mounting feet is reduced by 30 mm.
Assembly with terminal blocks provides for 10 mm clearance to the ends of the mounting rail.
Recommended order:
TS 35 mounting rail (screw terminal) WDU 2.5 1020000000 / (tension clamp terminal) ZDU 2.5 1608510000 / (tension clamp terminal) PDU 2.5 1896110000
TS 32 mounting rail (screw terminal) SAK 2.5 0279660000
TS 15 mounting rail (screw terminal) AKZ 2.5 0697160000

### Number of cable entries

| Number of cable entries | A / B | C / D |
|---|---|---|
| M12 | 96 | 126 |
| M16 | 64 | 84 |
| M20 | 42 | 54 |
| M25 | 36 | 48 |
| M32 | 20 | 26 |
| M40 | 16 | 22 |
| M50 | 6 | 10 |
| M63 | 6 | 8 |
| M75 | 4 | 6 |

**Note** Our IP 68 brass cable glands serve as a reference for these recommended values.

### Dimensions of mounting plate

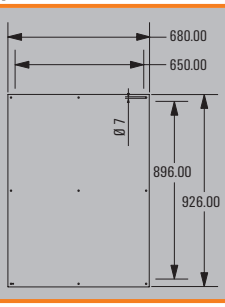

# Klippon® TB QL - Quarter Lock

**Steel enclosures**
**for use in industrial and in explosive hazard areas**

The Klippon® TB enclosure range features excellent performance characteristics, even under the most difficult environmental conditions, and comply with the stricter requirements of explosive hazard areas found in the process or power generation industries. The Klippon® TB QL enclosure range offers further improvements to a product line that is already successfully leading the market.

Weidmüller can manufacture and supply this enclosure to match customer specifications and fitted with all necessary terminals and cable glands.

## Overview of enclosures

### Ordering data

| Description | Length x width x depth in mm | 1 Gland Plate (below) | 2 Gland Plates (above + below) | 3 Gland Plates (below + sides) | 4 Gland Plates (all sides) |
|---|---|---|---|---|---|
| KTB QL 221513 S4E_* | 229 x 152 x 133 | 1199860000 | 1199870000 | 1199880000 | 1199890000 |
| KTB QL 262615 S4E_* | 260 x 260 x 150 | 1199910000 | 1199920000 | 1199930000 | 1199940000 |
| KTB QL 262620 S4E_* | 260 x 260 x 200 | 1199960000 | 1199970000 | 1199980000 | 1199990000 |
| KTB QL 303015 S4E_* | 306 x 306 x 150 | 1200020000 | 1200030000 | 1200040000 | 1200050000 |
| KTB QL 303020 S4E_* | 306 x 306 x 200 | 1200070000 | 1200080000 | 1200090000 | 1200100000 |
| KTB QL 352615 S4E_* | 350 x 260 x 150 | 1200120000 | 1200130000 | 1200140000 | 1200150000 |
| KTB QL 352620 S4E_* | 350 x 260 x 200 | 1200170000 | 1200180000 | 1200190000 | 1200210000 |
| KTB QL 403015 S4E_* | 400 x 300 x 150 | 1200230000 | 1200240000 | 1200250000 | 1200260000 |
| KTB QL 403020 S4E_* | 400 x 300 x 200 | 1200280000 | 1200290000 | 1200310000 | 1200320000 |
| KTB QL 453815 S4E_* | 458 x 382 x 150 | 1200340000 | 1200350000 | 1200360000 | 1200370000 |
| KTB QL 453820 S4E_* | 458 x 382 x 200 | 1200390000 | 1200410000 | 1200420000 | 1200430000 |
| KTB QL 484815 S4E_* | 480 x 480 x 150 | 1200450000 | 1200460000 | 1200470000 | 1200480000 |
| KTB QL 484820 S4E_* | 480 x 480 x 200 | 1200510000 | 1200520000 | 1200530000 | 1200540000 |
| KTB QL 553515 S4E_* | 550 x 350 x 150 | 1200560000 | 1200570000 | 1200580000 | 1200590000 |
| KTB QL 553520 S4E_* | 550 x 350 x 200 | 1200620000 | 1200630000 | 1200640000 | 1200650000 |
| KTB QL 624515 S4E_* | 620 x 450 x 150 | 1200670000 | 1200680000 | 1200690000 | 1200710000 |
| KTB QL 624520 S4E_* | 620 x 450 x 200 | 1200730000 | 1200740000 | 1200750000 | 1200760000 |
| KTB QL 765015 S4E_* | 762 x 508 x 150 | 1200780000 | 1200790000 | 1200810000 | 1200820000 |
| KTB QL 765020 S4E_* | 762 x 508 x 200 | 1200840000 | 1200850000 | 1200860000 | 1200870000 |
| KTB QL 916115 S4E_* | 914 x 610 x 150 | 1200890000 | 1200910000 | 1200920000 | 1200930000 |
| KTB QL 916120 S4E_* | 914 x 610 x 200 | 1200950000 | 1200960000 | 1200970000 | 1200980000 |
| KTB QL 987420 S4E_* | 980 x 740 x 200 | 1201010000 | 1201020000 | 1201030000 | 1201040000 |
| **Note** | | * Placeholder for the number of gland plates (1, 2, 3, 4). Klippon® TB QL enclosures are available without gland plates on request. | | | |

## Technical Overview

### Features

- Available in 12 sizes and 3 standard depths
- Equipped with up to 4 gland plates
- The gasket is protected against compression
- Quick-locking lid, comes with a slot as standard
- Improved temperature performance
- IP66 protection class
- Earth studs in enclosure cover and bottom section
- Welded mounting feet

**Note**

### Technical data

| | |
|---|---|
| Enclosure material** | Stainless steel 1.4404 (316L) 1.5 mm |
| Surface finish | Electropolished |
| IP protection class | IP 66 to IEC EN 60079-0 |
| NEMA protection classes | 3, 4x, 12 |
| Gland plates | 1 - 4 (fixed with M6 hexagon head screws and 10 mm heads), optionally without a gland plate |
| Gland plate thickness | 3 mm (other thickness of up to 20 mm are available on request) |
| Earthing inside | Enclosure base and lid: welded M6 stainless steel earth studs |
| Earthing outside | Continuous M10 brass earth stud (optionally with stainless-steel earth stud) |
| Installation mounting | 4 or 9 mounting bolts with M6 threaded holes to attach the mounting plate or mounting rails |
| Enclosure attachment | 4 welded mounting feet with 11-mm holes (2 slotted and 2 cross-shaped openings) |
| Lid opening | Can be removed completely, lid opening angle 130 ° |
| Cover attachment | Quarter-turn lock with slotted insert (other inserts available on request) |
| Impact resistance | 7 J ATEX applications, 10 J industrial applications |
| Gasket material | Silicone |
| Operating temperature range | -60 °C...+135 °C |
| Lid screws, torque* | 2.5 Nm |
| **Note** | * For screwing on the cover, we recommend our hexagon 10 mm socket wrench (9009070000)<br>** Painted steel enclosures are available on request. |

### Approvals for empty enclosures

| | |
|---|---|
| ATEX certificate | KEMA 10ATEX0047 U |
| ATEX marking | II 2 G Ex e IIC Gb<br>II 2 D Ex tb IIIC Db IP66 |
| IECEx certificate | IECEx KEM 10.0016U |
| IECEx marking | Ex e IIC Gb<br>Ex tb IIIC Db IP66 |
| GOST Ex | POCC DE.ME92.B02036 |
| cULus | E243298 |
| Germanischer Lloyd | 11534 - 10 HH |
| Russian Maritime Register | 10.04095.250 |
| INMETRO | In preparation |
| **Note** | The Klippon® TB QL enclosure range can be pre-fitted in our customer specific production department according to your wishes;<br>as an example, terminals, or other approved components, can be installed as required. |

### Approvals for control and distribution box

| | |
|---|---|
| ATEX certificate | KEMA 10ATEX0051 |
| ATEX marking | II 2 G Ex eb IIC T6...T4<br>II 1 G Ex ia IIC T6...T4<br>II 2(1) G Ex eb ia IIC T6...T4<br>II 2 D Ex tb IIIC T85 °C...T135 °C IP66 |
| IECEx certificate | IECEx KEM 10.0020 |
| IECEx marking | Ex eb IIC T...<br>Ex ia IIC T...<br>Ex eb ia IIC T...<br>Ex tb IIIC T85 °C...T135 °C IP66 |
| **Note** | Labelling depends on the application layout. |

# Integrate, expand and customise: the perfect supplement to every application

The fully structured range of system accessories for the Klippon® TB enclosure range allows you to easily adapt the enclosure to meet the specific requirements of every application.

The following options are available:

### 1 Document holder

Document holders for storage of important documents in the enclosure.

### 2 Earthing studs

Earthing studs are replaceable. Available in two versions – brass and stainless steel.

### 3 Gland plates

Gland plates are available as spares and also in various material thicknesses.

### 4 Mounting plates

Mounting plates with and without a drilling pattern, for horizontal and vertical mounting of rails, or components fitted directly.

### 5 Mounting hardware kits

Mounting hardware kits are available for quick and easy installation of label holders, mounting plates, gland plates, document holders and rain hoods.

### 6 Door stay

A door stay prevent the door from being closed unintentionally, regardless of the mounting position of the enclosure.
This item is **only** available Ex-works.

### 7 Locking systems

Various locking systems are available for the safe securing of the enclosure. There are padlocks for the Klippon® TB MH enclosures and a range of lock inserts for the Klippon® TB QL enclosures.

### 8 Type label holder

A range of label holders are available for product identification.

### 9 Rain hoods

The rain hood provides an ideal, additional level of protection for the enclosure. Particularly useful against heavy rainfall or extreme levels of direct sunlight.

## Klippon® TB QL 221513

**Depth** 133 mm

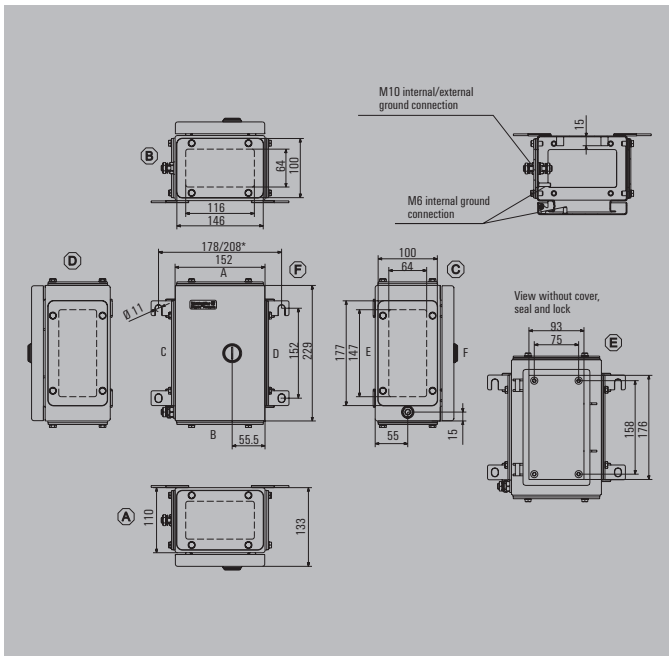


| | |
|---|---|
| Height/Width/Depth | 229 / 152 / 133 mm |

### Ordering data

| Stainless steel 1.4404 316L, electropolished | Order No. |
|---|---|
| 1 gland plate - bottom | 1199860000 |
| 2 gland plates - top and bottom sides (A & B) | 1199870000 |
| 3 gland plates - bottom, left and right sides (B, C & D) | 1199880000 |
| 4 gland plates - top, bottom, left and right sides (A, B, C & D) | 1199890000 |
| **Note** Painted sheet steel enclosure available on request. Standard colour is similar to RAL 7035. | |

### Accessories

| Mounting plates and fastening screws | Order No. |
|---|---|
| Steel sheet, zinc plated | 1193930000 |
| Stainless steel 1.4301 | 1193810000 |
| With hole pattern, natural stainless steel 1.4301 | 1257650000 |
| Fastening screws for mounting plates | 0642600000 |
| Fastening screws for terminal rails | 1274150000 |
| **Stainless steel spacer M6 x 8, Set of 4** | |
| 10 mm length | 0935110000 |
| 15 mm length | 0935120000 |
| 20 mm length | 0935130000 |
| 30 mm length | 0935140000 |
| **Gland plates and screws - 6 mm** | |
| Top and bottom sides (A & B), electropolished stainless steel 1.4404 | 1256270000 |
| Left and right sides (C & D), electropolished stainless steel 1.4404 | 1256280000 |
| Mounting screw, stainless steel 1.4404 | 1253230000 |
| **Mirror-polish Stainless steel 1.4301 rain hood (2R)** | |
| | 1281360000 |
| **Label holder** | |
| 70 x 70 angled stainless steel 1.4301 | 1279320000 |
| 130x50 stainless steel 1.4301 | 1283450000 |
| 100x25 stainless steel 1.4301 | 1257640000 |
| **Document holder** | |
| For DIN A6 size documents | |
| For DIN A5 size documents | |
| For DIN A4 size documents | |
| **Set of fixings** | |
| For label holders, rain hoods and document holders (rivet) | 1252190000 |
| For plastic (Trafolyte), identification plate (screw) | 1285200000 |
| **Earthing stud** | |
| Stainless steel 1.4404 | 1192690000 |

**Note**

### Max. number of terminals (industry)

| Max. number of terminals (industry) | vertical | horizontal |
|---|---|---|
| 2.5 mm² | 1x29 | 1x15 |
| 4 mm² | | 1x13 |
| 6 mm² | | 1x9 |
| 10 mm² | | 1x7 |
| 16 mm² | | 1x6 |
| 35 mm² | | |

**Note**

*For enclosure versions with zero, one or two gland plates, the horizontal gap between the mounting feet is reduced by 30 mm.
Assembly with terminal blocks provides for 10 mm clearance to the ends of the mounting rail.
Recommended order:
TS 35 mounting rail (screw terminal) WDU 2.5 1020000000 / (tension clamp terminal) ZDU 2.5 1608510000 / (tension clamp terminal) PDU 2.5 1896110000
TS 32 mounting rail (screw terminal) SAK 2.5 0279660000
TS 15 mounting rail (screw terminal) AKZ 2.5 0697160000

### Number of cable entries

| Number of cable entries | A / B | C / D |
|---|---|---|
| M12 | 6 | 8 |
| M16 | 5 | 6 |
| M20 | 2 | 3 |
| M25 | 2 | 2 |
| M32 | 1 | 2 |
| M40 | 1 | 2 |
| M50 | 0 | 0 |
| M63 | 0 | 0 |
| M75 | 0 | 0 |

**Note** Our IP 68 brass cable glands serve as a reference for these recommended values.

### Dimensions of mounting plate

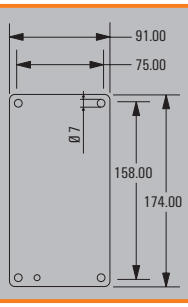

## Klippon® TB QL 262615

**Depth** 150 mm

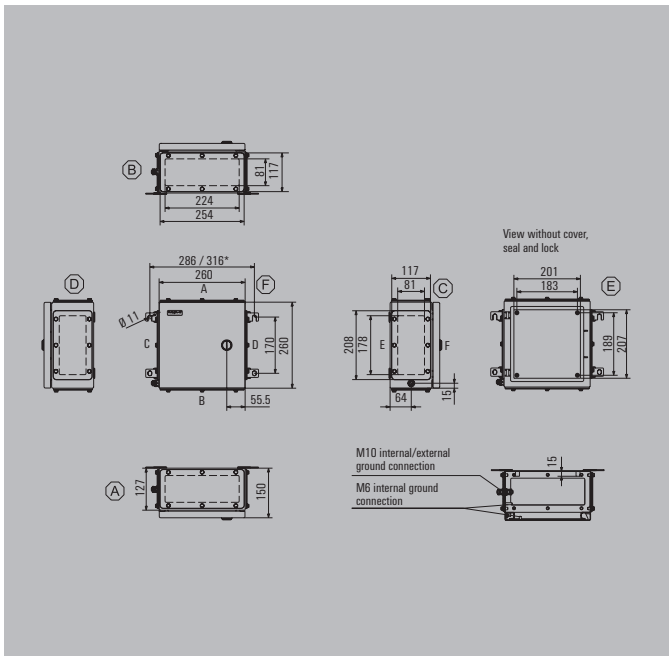


| | |
|---|---|
| Height/Width/Depth | 260 / 260 / 150 mm |

### Ordering data

| Stainless steel 1.4404 316L, electropolished | Order No. |
|---|---|
| 1 gland plate - bottom | 1199910000 |
| 2 gland plates - top and bottom sides (A & B) | 1199920000 |
| 3 gland plates - bottom, left and right sides (B, C & D) | 1199930000 |
| 4 gland plates - top, bottom, left and right sides (A, B, C & D) | 1199940000 |
| **Note** | Painted sheet steel enclosure available on request. Standard colour is similar to RAL 7035. |

### Accessories

| Mounting plates and fastening screws | Order No. |
|---|---|
| Steel sheet, zinc plated | 1193950000 |
| Stainless steel 1.4301 | 1193820000 |
| With hole pattern, natural stainless steel 1.4301 | 1257660000 |
| Fastening screws for mounting plates | 0642600000 |
| Fastening screws for terminal rails | 1274150000 |
| **Stainless steel spacer M6 x 8, Set of 4** | |
| 10 mm length | 0935110000 |
| 15 mm length | 0935120000 |
| 20 mm length | 0935130000 |
| 30 mm length | 0935140000 |
| **Gland plates and screws - 6 mm** | |
| Top and bottom sides (A & B), electropolished stainless steel 1.4404 | 1256290000 |
| Left and right sides (C & D), electropolished stainless steel 1.4404 | 1256310000 |
| Mounting screw, stainless steel 1.4404 | 1253230000 |
| **Mirror-polish Stainless steel 1.4301 rain hood (2R)** | |
| | 1281370000 |
| **Label holder** | |
| 70 x 70 angled stainless steel 1.4301 | 1279320000 |
| 130x50 stainless steel 1.4301 | 1283450000 |
| 100x25 stainless steel 1.4301 | 1257640000 |
| **Document holder** | |
| For DIN A6 size documents | 1252780000 |
| For DIN A5 size documents | |
| For DIN A4 size documents | |
| **Set of fixings** | |
| For label holders, rain hoods and document holders (rivet) | 1252190000 |
| For plastic (Trafolyte), identification plate (screw) | 1285200000 |
| **Earthing stud** | |
| Stainless steel 1.4404 | 1192690000 |

**Note**

### Max. number of terminals (industry)

| Max. number of terminals (industry) | vertical | horizontal |
|---|---|---|
| 2.5 mm² | 2x35 | 2x34 |
| 4 mm² | 1x30 | 1x29 |
| 6 mm² | 1x22 | 1x22 |
| 10 mm² | 1x18 | 1x17 |
| 16 mm² | 1x15 | 1x14 |
| 35 mm² | | |

**Note**

*For enclosure versions with zero, one or two gland plates, the horizontal gap between the mounting feet is reduced by 30 mm.
Assembly with terminal blocks provides for 10 mm clearance to the ends of the mounting rail.
Recommended order:
TS 35 mounting rail (screw terminal) WDU 2.5 1020000000 / (tension clamp terminal) ZDU 2.5 1608510000 / (tension clamp terminal) PDU 2.5 1896110000
TS 32 mounting rail (screw terminal) SAK 2.5 0279660000
TS 15 mounting rail (screw terminal) AKZ 2.5 0697160000

### Number of cable entries

| Number of cable entries | A / B | C / D |
|---|---|---|
| M12 | 20 | 15 |
| M16 | 11 | 8 |
| M20 | 9 | 7 |
| M25 | 4 | 3 |
| M32 | 3 | 2 |
| M40 | 3 | 2 |
| M50 | 2 | 2 |
| M63 | 0 | 0 |
| M75 | 0 | 0 |

**Note** Our IP 68 brass cable glands are used as the reference for these guideline values.

### Dimensions of mounting plate

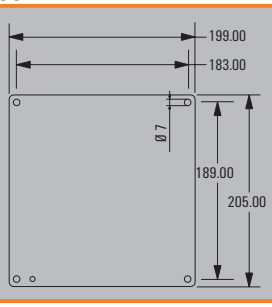

## Klippon® TB QL 262620

**Depth** 200 mm

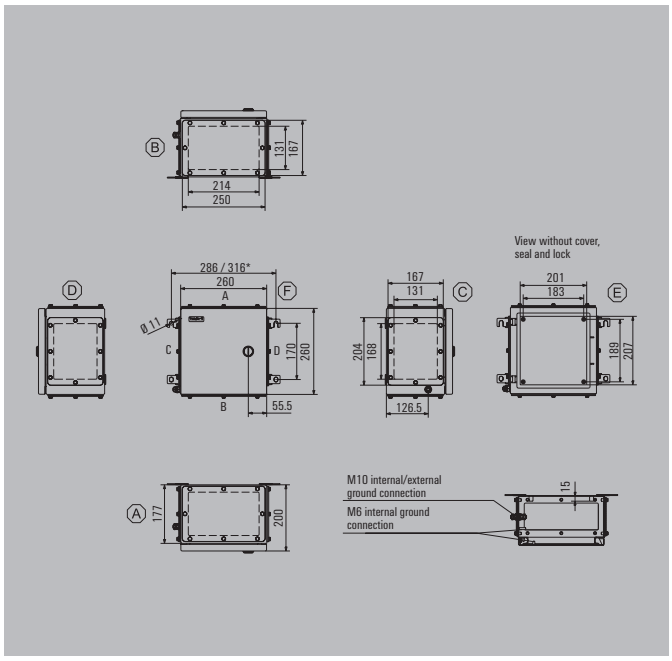


| Height/Width/Depth | 260 / 260 / 200 mm |
|---|---|

### Ordering data

| Stainless steel 1.4404 316L, electropolished | Order No. |
|---|---|
| 1 gland plate - bottom | 1199960000 |
| 2 gland plates - top and bottom sides (A & B) | 1199970000 |
| 3 gland plates - bottom, left and right sides (B, C & D) | 1199980000 |
| 4 gland plates - top, bottom, left and right sides (A, B, C & D) | 1199990000 |
| **Note** | Painted sheet steel enclosure available on request. Standard colour is similar to RAL 7035. |

### Accessories

| Mounting plates and fastening screws | Order No. |
|---|---|
| Steel sheet, zinc plated | 1193950000 |
| Stainless steel 1.4301 | 1193820000 |
| With hole pattern, natural stainless steel 1.4301 | 1257660000 |
| Fastening screws for mounting plates | 0642600000 |
| Fastening screws for terminal rails | 1274150000 |
| **Stainless steel spacer M6 x 8, Set of 4** | |
| 10 mm length | 0935110000 |
| 15 mm length | 0935120000 |
| 20 mm length | 0935130000 |
| 30 mm length | 0935140000 |
| **Gland plates and screws - 6 mm** | |
| Top and bottom sides (A & B), electropolished stainless steel 1.4404 | 1256320000 |
| Left and right sides (C & D), electropolished stainless steel 1.4404 | 1256330000 |
| Mounting screw, stainless steel 1.4404 | 1253230000 |
| **Mirror-polish Stainless steel 1.4301 rain hood (2R)** | |
| | 1281380000 |
| **Label holder** | |
| 70 x 70 angled stainless steel 1.4301 | 1279320000 |
| 130x50 stainless steel 1.4301 | 1283450000 |
| 100x25 stainless steel 1.4301 | 1257640000 |
| **Document holder** | |
| For DIN A6 size documents | 1252780000 |
| For DIN A5 size documents | |
| For DIN A4 size documents | |
| **Set of fixings** | |
| For label holders, rain hoods and document holders (rivet) | 1252190000 |
| For plastic (Trafolyte), identification plate (screw) | 1285200000 |
| **Earthing stud** | |
| Stainless steel 1.4404 | 1192690000 |

**Note**

### Max. number of terminals (industry)

| Max. number of terminals (industry) | vertical | horizontal |
|---|---|---|
| 2.5 mm² | 2x35 | 2x34 |
| 4 mm² | 1x30 | 1x29 |
| 6 mm² | 1x22 | 1x22 |
| 10 mm² | 1x18 | 1x17 |
| 16 mm² | 1x15 | 1x14 |
| 35 mm² | | |

**Note**

*For enclosure versions with zero, one or two gland plates, the horizontal gap between the mounting feet is reduced by 30 mm.
Assembly with terminal blocks provides for 10 mm clearance to the ends of the mounting rail.
Recommended order:
TS 35 mounting rail (screw terminal) WDU 2.5 1020000000 / (tension clamp terminal) ZDU 2.5 1608510000 / (tension clamp terminal) PDU 2.5 1896110000
TS 32 mounting rail (screw terminal) SAK 2.5 0279660000
TS 15 mounting rail (screw terminal) AKZ 2.5 0697160000

### Number of cable entries

| Number of cable entries | A / B | C / D |
|---|---|---|
| M12 | 33 | 25 |
| M16 | 22 | 16 |
| M20 | 14 | 11 |
| M25 | 12 | 9 |
| M32 | 6 | 4 |
| M40 | 5 | 4 |
| M50 | 2 | 2 |
| M63 | 2 | 1 |
| M75 | 1 | 1 |

**Note** Our IP 68 brass cable glands serve as a reference for these recommended values.

### Dimensions of mounting plate

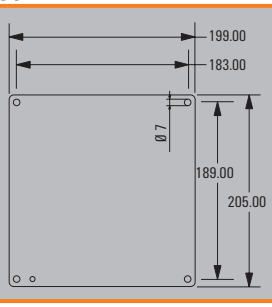

## Klippon® TB QL 303015

**Depth** 150 mm

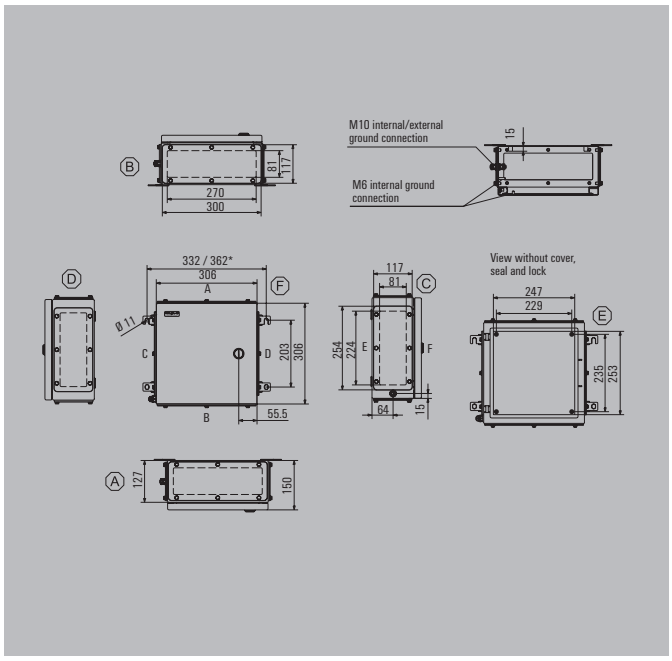


| Height/Width/Depth | 306 / 306 / 150 mm |
|---|---|

### Ordering data

| Stainless steel 1.4404 316L, electropolished | Order No. |
|---|---|
| 1 gland plate - bottom | 1200020000 |
| 2 gland plates - top and bottom sides (A & B) | 1200030000 |
| 3 gland plates - bottom, left and right sides (B, C & D) | 1200040000 |
| 4 gland plates - top, bottom, left and right sides (A, B, C & D) | 1200050000 |
| **Note** | Painted sheet steel enclosure available on request. Standard colour is similar to RAL 7035. |

### Accessories

| Mounting plates and fastening screws | Order No. |
|---|---|
| Steel sheet, zinc plated | 1193960000 |
| Stainless steel 1.4301 | 1193830000 |
| With hole pattern, natural stainless steel 1.4301 | 1257670000 |
| Fastening screws for mounting plates | 0642600000 |
| Fastening screws for terminal rails | 1274150000 |
| **Stainless steel spacer M6 x 8, Set of 4** | |
| 10 mm length | 0935110000 |
| 15 mm length | 0935120000 |
| 20 mm length | 0935130000 |
| 30 mm length | 0935140000 |
| **Gland plates and screws - 6 mm** | |
| Top and bottom sides (A & B), electropolished stainless steel 1.4404 | 1256340000 |
| Left and right sides (C & D), electropolished stainless steel 1.4404 | 1256350000 |
| Mounting screw, stainless steel 1.4404 | 1253230000 |
| **Mirror-polish Stainless steel 1.4301 rain hood (2R)** | |
| | 1281390000 |
| **Label holder** | |
| 70 x 70 angled stainless steel 1.4301 | 1279320000 |
| 130x50 stainless steel 1.4301 | 1283450000 |
| 100x25 stainless steel 1.4301 | 1257640000 |
| **Document holder** | |
| For DIN A6 size documents | 1252780000 |
| For DIN A5 size documents | |
| For DIN A4 size documents | |
| **Set of fixings** | |
| For label holders, rain hoods and document holders (rivet) | 1252190000 |
| For plastic (Trafolyte), identification plate (screw) | 1285200000 |
| **Earthing stud** | |
| Stainless steel 1.4404 | 1192690000 |

**Note**

### Max. number of terminals (industry)

| Max. number of terminals (industry) | vertical | horizontal |
|---|---|---|
| 2.5 mm² | 2x44 | 2x43 |
| 4 mm² | 2x37 | 2x36 |
| 6 mm² | 2x28 | 2x27 |
| 10 mm² | 1x22 | 1x22 |
| 16 mm² | 1x19 | 1x18 |
| 35 mm² | 1x14 | 1x13 |

**Note**

*For enclosure versions with zero, one or two gland plates, the horizontal gap between the mounting feet is reduced by 30 mm.
Assembly with terminal blocks provides for 10 mm clearance to the ends of the mounting rail.
Recommended order:
TS 35 mounting rail (screw terminal) WDU 2.5 1020000000 / (tension clamp terminal) ZDU 2.5 1608510000 / (tension clamp terminal) PDU 2.5 1896110000
TS 32 mounting rail (screw terminal) SAK 2.5 0279660000
TS 15 mounting rail (screw terminal) AKZ 2.5 0697160000

### Number of cable entries

| Number of cable entries | A / B | C / D |
|---|---|---|
| M12 | 24 | 20 |
| M16 | 13 | 11 |
| M20 | 11 | 9 |
| M25 | 5 | 4 |
| M32 | 4 | 3 |
| M40 | 3 | 3 |
| M50 | 3 | 2 |
| M63 | 0 | 0 |
| M75 | 0 | 0 |

**Note** Our IP 68 brass cable glands are used as the reference for these guideline values.

### Dimensions of mounting plate

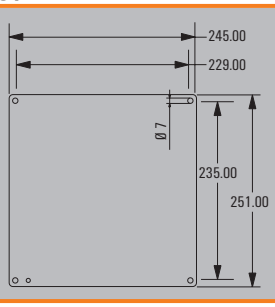

## Klippon® TB QL 303020

**Depth** 200 mm

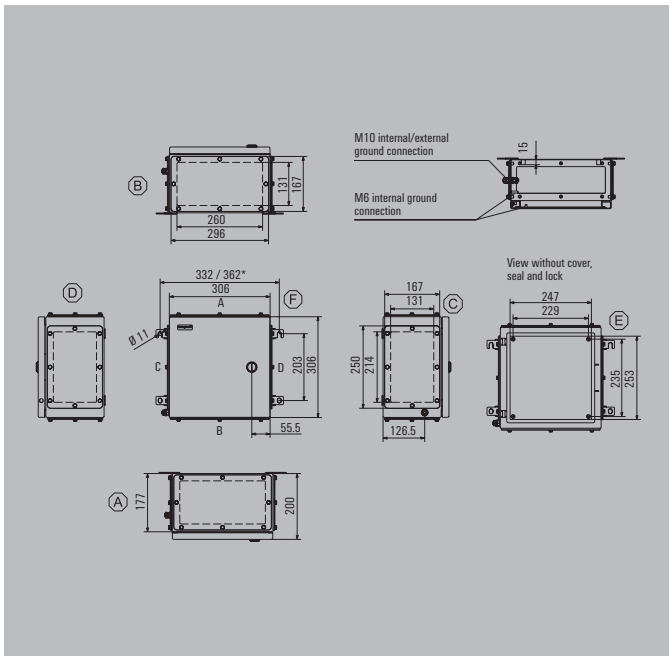


| Height/Width/Depth | 306 / 306 / 200 mm |
|---|---|

## Ordering data

| Stainless steel 1.4404 316L, electropolished | Order No. |
|---|---|
| 1 gland plate - bottom | 1200070000 |
| 2 gland plates - top and bottom sides (A & B) | 1200080000 |
| 3 gland plates - bottom, left and right sides (B, C & D) | 1200090000 |
| 4 gland plates - top, bottom, left and right sides (A, B, C & D) | 1200100000 |
| **Note** Painted sheet steel enclosure available on request. Standard colour is similar to RAL 7035. | |

## Accessories

| Mounting plates and fastening screws | Order No. |
|---|---|
| Steel sheet, zinc plated | 1193960000 |
| Stainless steel 1.4301 | 1193830000 |
| With hole pattern, natural stainless steel 1.4301 | 1257670000 |
| Fastening screws for mounting plates | 0642600000 |
| Fastening screws for terminal rails | 1274150000 |
| **Stainless steel spacer M6 x 8, Set of 4** | |
| 10 mm length | 0935110000 |
| 15 mm length | 0935120000 |
| 20 mm length | 0935130000 |
| 30 mm length | 0935140000 |
| **Gland plates and screws - 6 mm** | |
| Top and bottom sides (A & B), electropolished stainless steel 1.4404 | 1256360000 |
| Left and right sides (C & D), electropolished stainless steel 1.4404 | 1256370000 |
| Mounting screw, stainless steel 1.4404 | 1253230000 |
| **Mirror-polish Stainless steel 1.4301 rain hood (2R)** | |
| | 1281400000 |
| **Label holder** | |
| 70 x 70 angled stainless steel 1.4301 | 1279320000 |
| 130x50 stainless steel 1.4301 | 1283450000 |
| 100x25 stainless steel 1.4301 | 1257640000 |
| **Document holder** | |
| For DIN A6 size documents | 1252780000 |
| For DIN A5 size documents | |
| For DIN A4 size documents | |
| **Set of fixings** | |
| For label holders, rain hoods and document holders (rivet) | 1252190000 |
| For plastic (Trafolyte), identification plate (screw) | 1285200000 |
| **Earthing stud** | |
| Stainless steel 1.4404 | 1192690000 |

**Note**

## Max. number of terminals (industry)

| Max. number of terminals (industry) | vertical | horizontal |
|---|---|---|
| 2.5 mm² | 2x44 | 2x43 |
| 4 mm² | 2x37 | 2x36 |
| 6 mm² | 2x28 | 2x27 |
| 10 mm² | 1x22 | 1x22 |
| 16 mm² | 1x19 | 1x18 |
| 35 mm² | 1x14 | 1x13 |

**Note**

*For enclosure versions with zero, one or two gland plates, the horizontal gap between the mounting feet is reduced by 30 mm.
Assembly with terminal blocks provides for 10 mm clearance to the ends of the mounting rail.
Recommended order:
TS 35 mounting rail (screw terminal) WDU 2.5 1020000000 / (tension clamp terminal) ZDU 2.5 1608510000 / (tension clamp terminal) PDU 2.5 1896110000
TS 32 mounting rail (screw terminal) SAK 2.5 0279660000
TS 15 mounting rail (screw terminal) AKZ 2.5 0697160000

## Number of cable entries

| Number of cable entries | A / B | C / D |
|---|---|---|
| M12 | 40 | 33 |
| M16 | 26 | 22 |
| M20 | 17 | 14 |
| M25 | 14 | 12 |
| M32 | 8 | 6 |
| M40 | 6 | 5 |
| M50 | 3 | 2 |
| M63 | 2 | 2 |
| M75 | 2 | 1 |

**Note** Our IP 68 brass cable glands serve as a reference for these recommended values.

## Dimensions of mounting plate

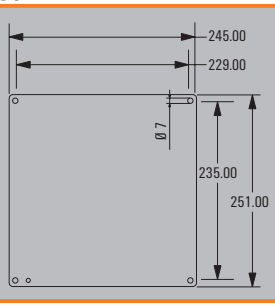

## Klippon® TB QL 352615

**Depth** 150 mm

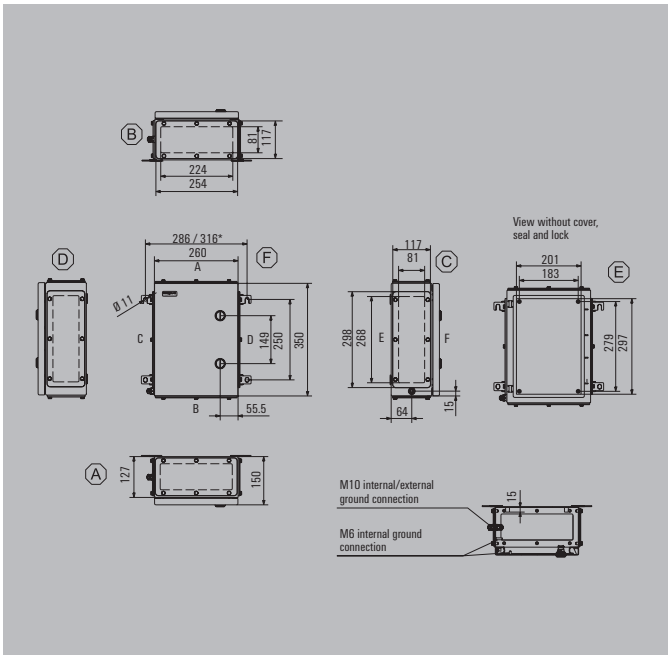


| | |
|---|---|
| Height/Width/Depth | 350 / 260 / 150 mm |

### Ordering data

| Stainless steel 1.4404 316L, electropolished | Order No. |
|---|---|
| 1 gland plate - bottom | 1200120000 |
| 2 gland plates - top and bottom sides (A & B) | 1200130000 |
| 3 gland plates - bottom, left and right sides (B, C & D) | 1200140000 |
| 4 gland plates - top, bottom, left and right sides (A, B, C & D) | 1200150000 |

**Note** Painted sheet steel enclosure available on request. Standard colour is similar to RAL 7035.

### Accessories

| Mounting plates and fastening screws | Order No. |
|---|---|
| Steel sheet, zinc plated | 1193970000 |
| Stainless steel 1.4301 | 1193840000 |
| With hole pattern, natural stainless steel 1.4301 | 1257680000 |
| Fastening screws for mounting plates | 0642600000 |
| Fastening screws for terminal rails | 1274150000 |
| **Stainless steel spacer M6 x 8, Set of 4** | |
| 10 mm length | 0935110000 |
| 15 mm length | 0935120000 |
| 20 mm length | 0935130000 |
| 30 mm length | 0935140000 |
| **Gland plates and screws - 6 mm** | |
| Top and bottom sides (A & B), electropolished stainless steel 1.4404 | 1256380000 |
| Left and right sides (C & D), electropolished stainless steel 1.4404 | 1256390000 |
| Mounting screw, stainless steel 1.4404 | 1253230000 |
| **Mirror-polish Stainless steel 1.4301 rain hood (2R)** | |
| | 1281410000 |
| **Label holder** | |
| 70 x 70 angled stainless steel 1.4301 | 1279320000 |
| 130x50 stainless steel 1.4301 | 1283450000 |
| 100x25 stainless steel 1.4301 | 1257640000 |
| **Document holder** | |
| For DIN A6 size documents | 1252780000 |
| For DIN A5 size documents | |
| For DIN A4 size documents | |
| **Set of fixings** | |
| For label holders, rain hoods and document holders (rivet) | 1252190000 |
| For plastic (Trafolyte), identification plate (screw) | 1285200000 |
| **Earthing stud** | |
| Stainless steel 1.4404 | 1192690000 |

**Note**

### Max. number of terminals (industry)

| Max. number of terminals (industry) | vertical | horizontal |
|---|---|---|
| 2.5 mm² | 2x53 | 2x34 |
| 4 mm² | 1x44 | 2x29 |
| 6 mm² | 1x33 | 2x22 |
| 10 mm² | 1x27 | 2x17 |
| 16 mm² | 1x22 | 1x14 |
| 35 mm² | | 1x11 |

**Note** *For enclosure versions with zero, one or two gland plates, the horizontal gap between the mounting feet is reduced by 30 mm.
Assembly with terminal blocks provides for 10 mm clearance to the ends of the mounting rail.
Recommended order:
TS 35 mounting rail (screw terminal) WDU 2.5 1020000000 / (tension clamp terminal) ZDU 2.5 1608510000 / (tension clamp terminal) PDU 2.5 1896110000
TS 32 mounting rail (screw terminal) SAK 2.5 0279660000
TS 15 mounting rail (screw terminal) AKZ 2.5 0697160000

### Number of cable entries

| Number of cable entries | A / B | C / D |
|---|---|---|
| M12 | 20 | 23 |
| M16 | 11 | 13 |
| M20 | 9 | 11 |
| M25 | 4 | 5 |
| M32 | 3 | 4 |
| M40 | 3 | 3 |
| M50 | 2 | 3 |
| M63 | 0 | 0 |
| M75 | 0 | 0 |

**Note** Our IP 68 brass cable glands serve as a reference for these recommended values.

### Dimensions of mounting plate

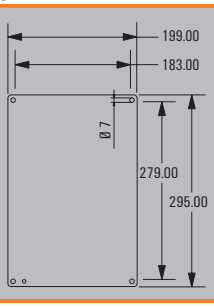

## Klippon® TB QL 352620

**Depth** 200 mm

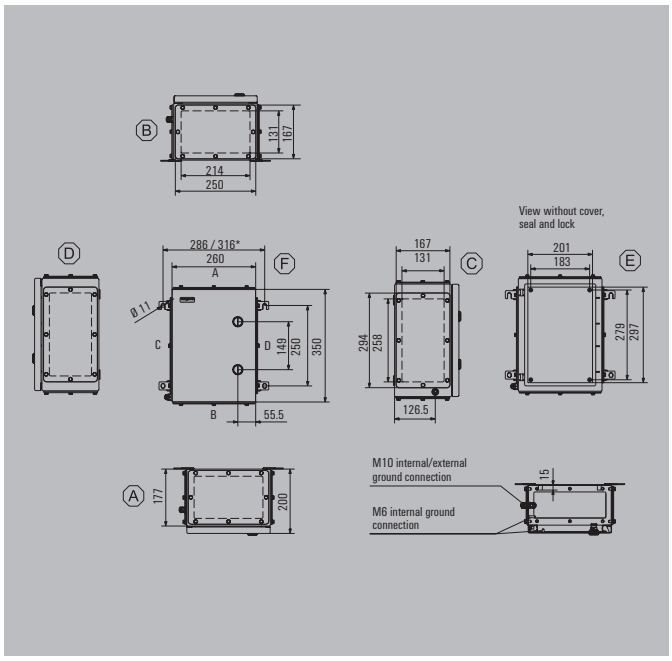


| | |
|---|---|
| Height/Width/Depth | 350 / 260 / 200 mm |

### Ordering data

| Stainless steel 1.4404 316L, electropolished | Order No. |
|---|---|
| 1 gland plate - bottom | 1200170000 |
| 2 gland plates - top and bottom sides (A & B) | 1200180000 |
| 3 gland plates - bottom, left and right sides (B, C & D) | 1200190000 |
| 4 gland plates - top, bottom, left and right sides (A, B, C & D) | 1200210000 |
| **Note** Painted sheet steel enclosure available on request. Standard colour is similar to RAL 7035. | |

### Accessories

| Mounting plates and fastening screws | Order No. |
|---|---|
| Steel sheet, zinc plated | 1193970000 |
| Stainless steel 1.4301 | 1193840000 |
| With hole pattern, natural stainless steel 1.4301 | 1257680000 |
| Fastening screws for mounting plates | 0642600000 |
| Fastening screws for terminal rails | 1274150000 |
| **Stainless steel spacer M6 x 8, Set of 4** | |
| 10 mm length | 0935110000 |
| 15 mm length | 0935120000 |
| 20 mm length | 0935130000 |
| 30 mm length | 0935140000 |
| **Gland plates and screws - 6 mm** | |
| Top and bottom sides (A & B), electropolished stainless steel 1.4404 | 1256410000 |
| Left and right sides (C & D), electropolished stainless steel 1.4404 | 1256420000 |
| Mounting screw, stainless steel 1.4404 | 1253230000 |
| **Mirror-polish Stainless steel 1.4301 rain hood (2R)** | |
| | 1281420000 |
| **Label holder** | |
| 70 x 70 angled stainless steel 1.4301 | 1279320000 |
| 130x50 stainless steel 1.4301 | 1283450000 |
| 100x25 stainless steel 1.4301 | 1257640000 |
| **Document holder** | |
| For DIN A6 size documents | 1252780000 |
| For DIN A5 size documents | |
| For DIN A4 size documents | |
| **Set of fixings** | |
| For label holders, rain hoods and document holders (rivet) | 1252190000 |
| For plastic (Trafolyte), identification plate (screw) | 1285200000 |
| **Earthing stud** | |
| Stainless steel 1.4404 | 1192690000 |

**Note**

### Max. number of terminals (industry)

| Max. number of terminals (industry) | vertical | horizontal |
|---|---|---|
| 2.5 mm² | 2x53 | 2x34 |
| 4 mm² | 1x44 | 2x29 |
| 6 mm² | 1x33 | 2x22 |
| 10 mm² | 1x27 | 2x17 |
| 16 mm² | 1x22 | 1x14 |
| 35 mm² | | 1x11 |

**Note** *For enclosure versions with zero, one or two gland plates, the horizontal gap between the mounting feet is reduced by 30 mm.
Assembly with terminal blocks provides for 10 mm clearance to the ends of the mounting rail.
Recommended order:
TS 35 mounting rail (screw terminal) WDU 2.5 1020000000 / (tension clamp terminal) ZDU 2.5 1608510000 / (tension clamp terminal) PDU 2.5 1896110000
TS 32 mounting rail (screw terminal) SAK 2.5 0279660000
TS 15 mounting rail (screw terminal) AKZ 2.5 0697160000

### Number of cable entries

| Number of cable entries | A / B | C / D |
|---|---|---|
| M12 | 33 | 38 |
| M16 | 22 | 26 |
| M20 | 14 | 17 |
| M25 | 12 | 14 |
| M32 | 6 | 7 |
| M40 | 5 | 6 |
| M50 | 2 | 3 |
| M63 | 2 | 2 |
| M75 | 1 | 2 |

**Note** Our IP 68 brass cable glands are used as the reference for these guideline values.

### Dimensions of mounting plate

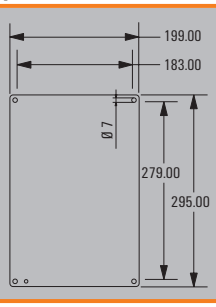

## Klippon® TB QL 403015

**Depth** 150 mm

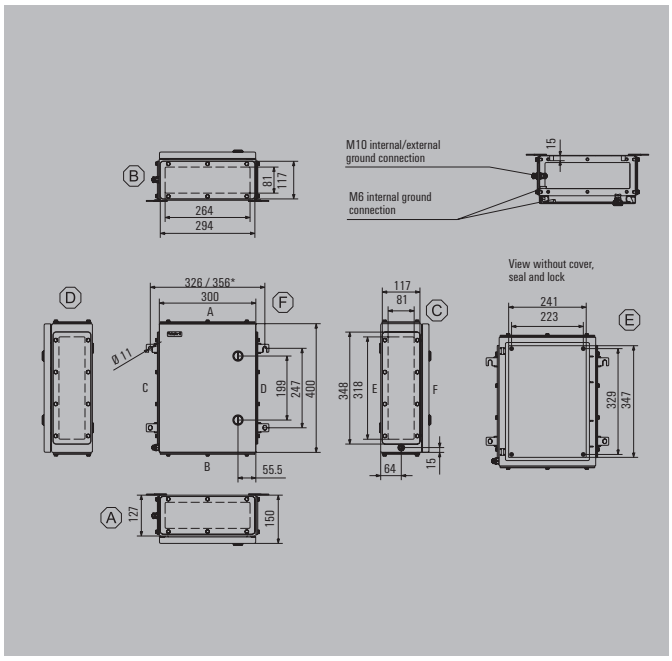


| | |
|---|---|
| Height/Width/Depth | 400 / 300 / 150 mm |

### Ordering data

| Stainless steel 1.4404 316L, electropolished | Order No. |
|---|---|
| 1 gland plate - bottom | 1200230000 |
| 2 gland plates - top and bottom sides (A & B) | 1200240000 |
| 3 gland plates - bottom, left and right sides (B, C & D) | 1200250000 |
| 4 gland plates - top, bottom, left and right sides (A, B, C & D) | 1200260000 |
| **Note** Painted sheet steel enclosure available on request. Standard colour is similar to RAL 7035. | |

### Accessories

| Mounting plates and fastening screws | Order No. |
|---|---|
| Steel sheet, zinc plated | 1193980000 |
| Stainless steel 1.4301 | 1193850000 |
| With hole pattern, natural stainless steel 1.4301 | 1257690000 |
| Fastening screws for mounting plates | 0642600000 |
| Fastening screws for terminal rails | 1274150000 |
| **Stainless steel spacer M6 x 8, Set of 4** | |
| 10 mm length | 0935110000 |
| 15 mm length | 0935120000 |
| 20 mm length | 0935130000 |
| 30 mm length | 0935140000 |
| **Gland plates and screws - 6 mm** | |
| Top and bottom sides (A & B), electropolished stainless steel 1.4404 | 1256430000 |
| Left and right sides (C & D), electropolished stainless steel 1.4404 | 1256440000 |
| Mounting screw, stainless steel 1.4404 | 1253230000 |
| **Mirror-polish Stainless steel 1.4301 rain hood (2R)** | |
| | 1281430000 |
| **Label holder** | |
| 70 x 70 angled stainless steel 1.4301 | 1279320000 |
| 130x50 stainless steel 1.4301 | 1283450000 |
| 100x25 stainless steel 1.4301 | 1257640000 |
| **Document holder** | |
| For DIN A6 size documents | 1252780000 |
| For DIN A5 size documents | |
| For DIN A4 size documents | |
| **Set of fixings** | |
| For label holders, rain hoods and document holders (rivet) | 1252190000 |
| For plastic (Trafolyte), identification plate (screw) | 1285200000 |
| **Earthing stud** | |
| Stainless steel 1.4404 | 1192690000 |

**Note**

### Max. number of terminals (industry)

| Max. number of terminals (industry) | vertical | horizontal |
|---|---|---|
| 2.5 mm² | 2x62 | 3x42 |
| 4 mm² | 2x52 | 3x35 |
| 6 mm² | 1x39 | 2x26 |
| 10 mm² | 1x32 | 2x21 |
| 16 mm² | 1x26 | 2x18 |
| 35 mm² | 1x20 | 1x13 |

**Note**

*For enclosure versions with zero, one or two gland plates, the horizontal gap between the mounting feet is reduced by 30 mm.
Assembly with terminal blocks provides for 10 mm clearance to the ends of the mounting rail.
Recommended order:
TS 35 mounting rail (screw terminal) WDU 2.5 1020000000 / (tension clamp terminal) ZDU 2.5 1608510000 / (tension clamp terminal) PDU 2.5 1896110000
TS 32 mounting rail (screw terminal) SAK 2.5 0279660000
TS 15 mounting rail (screw terminal) AKZ 2.5 0697160000

### Number of cable entries

| Number of cable entries | A / B | C / D |
|---|---|---|
| M12 | 23 | 29 |
| M16 | 13 | 16 |
| M20 | 11 | 13 |
| M25 | 5 | 6 |
| M32 | 4 | 5 |
| M40 | 3 | 4 |
| M50 | 3 | 3 |
| M63 | 0 | 0 |
| M75 | 0 | 0 |

**Note** Our IP 68 brass cable glands serve as a reference for these recommended values.

### Dimensions of mounting plate

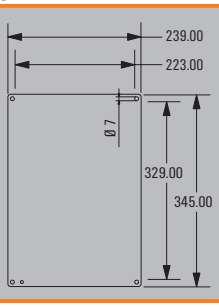

## Klippon® TB QL 403020

**Depth** 200 mm

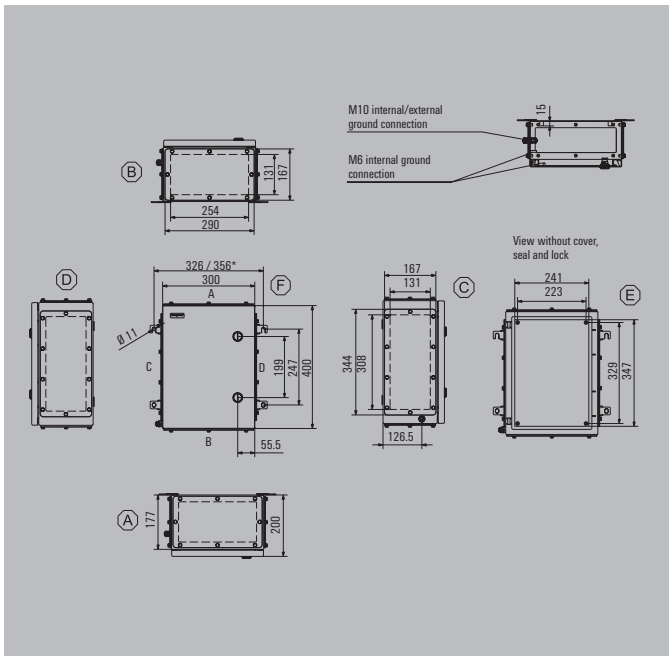


| | |
|---|---|
| Height/Width/Depth | 400 / 300 / 200 mm |

### Ordering data

| Stainless steel 1.4404 316L, electropolished | Order No. |
|---|---|
| 1 gland plate - bottom | 1200280000 |
| 2 gland plates - top and bottom sides (A & B) | 1200290000 |
| 3 gland plates - bottom, left and right sides (B, C & D) | 1200310000 |
| 4 gland plates - top, bottom, left and right sides (A, B, C & D) | 1200320000 |
| **Note** Painted sheet steel enclosure available on request. Standard colour is similar to RAL 7035. | |

### Accessories

| Mounting plates and fastening screws | Order No. |
|---|---|
| Steel sheet, zinc plated | 1193980000 |
| Stainless steel 1.4301 | 1193850000 |
| With hole pattern, natural stainless steel 1.4301 | 1257690000 |
| Fastening screws for mounting plates | 0642600000 |
| Fastening screws for terminal rails | 1274150000 |
| **Stainless steel spacer M6 x 8, Set of 4** | |
| 10 mm length | 0935110000 |
| 15 mm length | 0935120000 |
| 20 mm length | 0935130000 |
| 30 mm length | 0935140000 |
| **Gland plates and screws - 6 mm** | |
| Top and bottom sides (A & B), electropolished stainless steel 1.4404 | 1256450000 |
| Left and right sides (C & D), electropolished stainless steel 1.4404 | 1256470000 |
| Mounting screw, stainless steel 1.4404 | 1253230000 |
| **Mirror-polish Stainless steel 1.4301 rain hood (2R)** | |
| | 1281440000 |
| **Label holder** | |
| 70 x 70 angled stainless steel 1.4301 | 1279320000 |
| 130x50 stainless steel 1.4301 | 1283450000 |
| 100x25 stainless steel 1.4301 | 1257640000 |
| **Document holder** | |
| For DIN A6 size documents | 1252780000 |
| For DIN A5 size documents | |
| For DIN A4 size documents | |
| **Set of fixings** | |
| For label holders, rain hoods and document holders (rivet) | 1252190000 |
| For plastic (Trafolyte), identification plate (screw) | 1285200000 |
| **Earthing stud** | |
| Stainless steel 1.4404 | 1192690000 |

**Note**

### Max. number of terminals (industry)

| Max. number of terminals (industry) | vertical | horizontal |
|---|---|---|
| 2.5 mm² | 2x62 | 3x42 |
| 4 mm² | 2x52 | 3x35 |
| 6 mm² | 1x39 | 2x26 |
| 10 mm² | 1x32 | 2x21 |
| 16 mm² | 1x26 | 2x18 |
| 35 mm² | 1x20 | 1x13 |

**Note**

*For enclosure versions with zero, one or two gland plates, the horizontal gap between the mounting feet is reduced by 30 mm.
Assembly with terminal blocks provides for 10 mm clearance to the ends of the mounting rail.
Recommended order:
TS 35 mounting rail (screw terminal) WDU 2.5 1020000000 / (tension clamp terminal) ZDU 2.5 1608510000 / (tension clamp terminal) PDU 2.5 1896110000
TS 32 mounting rail (screw terminal) SAK 2.5 0279660000
TS 15 mounting rail (screw terminal) AKZ 2.5 0697160000

### Number of cable entries

| Number of cable entries | A / B | C / D |
|---|---|---|
| M12 | 38 | 48 |
| M16 | 26 | 32 |
| M20 | 17 | 20 |
| M25 | 14 | 17 |
| M32 | 7 | 9 |
| M40 | 6 | 7 |
| M50 | 3 | 3 |
| M63 | 2 | 3 |
| M75 | 2 | 2 |

**Note** Our IP 68 brass cable glands are used as the reference for these guideline values.

### Dimensions of mounting plate

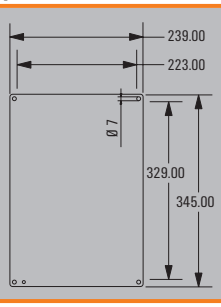

## Klippon® TB QL 453815

**Depth** 150 mm

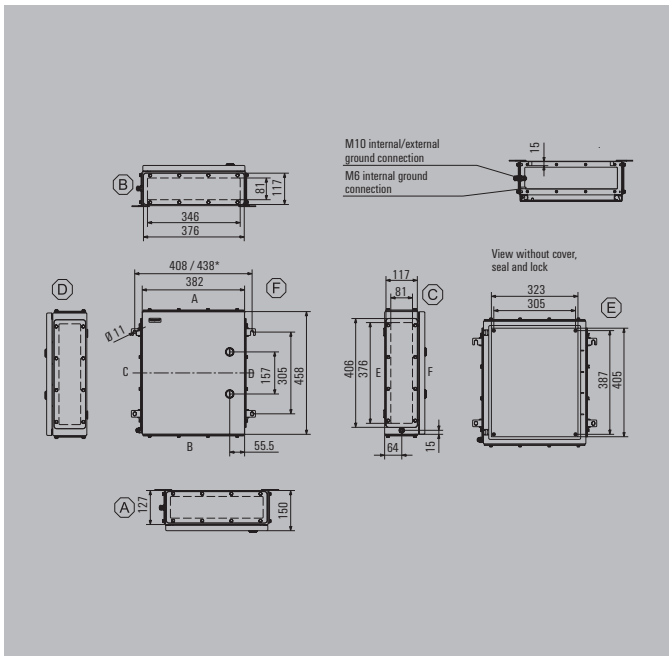


| | |
|---|---|
| Height/Width/Depth | 458 / 382 / 150 mm |

### Ordering data

| Stainless steel 1.4404 316L, electropolished | Order No. |
|---|---|
| 1 gland plate - bottom | 1200340000 |
| 2 gland plates - top and bottom sides (A & B) | 1200350000 |
| 3 gland plates - bottom, left and right sides (B, C & D) | 1200360000 |
| 4 gland plates - top, bottom, left and right sides (A, B, C & D) | 1200370000 |
| **Note** Painted sheet steel enclosure available on request. Standard colour is similar to RAL 7035. | |

### Accessories

| Mounting plates and fastening screws | Order No. |
|---|---|
| Steel sheet, zinc plated | 1193990000 |
| Stainless steel 1.4301 | 1193860000 |
| With hole pattern, natural stainless steel 1.4301 | 1257700000 |
| Fastening screws for mounting plates | 0642600000 |
| Fastening screws for terminal rails | 1274150000 |
| **Stainless steel spacer M6 x 8, Set of 4** | |
| 10 mm length | 0935110000 |
| 15 mm length | 0935120000 |
| 20 mm length | 0935130000 |
| 30 mm length | 0935140000 |
| **Gland plates and screws - 6 mm** | |
| Top and bottom sides (A & B), electropolished stainless steel 1.4404 | 1256480000 |
| Left and right sides (C & D), electropolished stainless steel 1.4404 | 1256490000 |
| Mounting screw, stainless steel 1.4404 | 1253230000 |
| **Mirror-polish Stainless steel 1.4301 rain hood (2R)** | |
| | 1281450000 |
| **Label holder** | |
| 70 x 70 angled stainless steel 1.4301 | 1279320000 |
| 130x50 stainless steel 1.4301 | 1283450000 |
| 100x25 stainless steel 1.4301 | 1257640000 |
| **Document holder** | |
| For DIN A6 size documents | 1252780000 |
| For DIN A5 size documents | 1252750000 |
| For DIN A4 size documents | 1252730000 |
| **Set of fixings** | |
| For label holders, rain hoods and document holders (rivet) | 1252190000 |
| For plastic (Trafolyte), identification plate (screw) | 1285200000 |
| **Earthing stud** | |
| Stainless steel 1.4404 | 1192690000 |

**Note**

### Max. number of terminals (industry)

| Max. number of terminals (industry) | vertical | horizontal |
|---|---|---|
| 2.5 mm² | 3x73 | 4x58 |
| 4 mm² | 2x62 | 3x48 |
| 6 mm² | 2x46 | 3x36 |
| 10 mm² | 2x37 | 2x29 |
| 16 mm² | 2x31 | 2x24 |
| 35 mm² | 1x23 | 1x18 |

**Note**

*For enclosure versions with zero, one or two gland plates, the horizontal gap between the mounting feet is reduced by 30 mm.
Assembly with terminal blocks provides for 10 mm clearance to the ends of the mounting rail.
Recommended order:
TS 35 mounting rail (screw terminal) WDU 2.5 1020000000 / (tension clamp terminal) ZDU 2.5 1608510000 / (tension clamp terminal) PDU 2.5 1896110000
TS 32 mounting rail (screw terminal) SAK 2.5 0279660000
TS 15 mounting rail (screw terminal) AKZ 2.5 0697160000

### Number of cable entries

| Number of cable entries | A / B | C / D |
|---|---|---|
| M12 | 30 | 33 |
| M16 | 17 | 19 |
| M20 | 15 | 16 |
| M25 | 6 | 7 |
| M32 | 5 | 6 |
| M40 | 4 | 5 |
| M50 | 4 | 4 |
| M63 | 0 | 0 |
| M75 | 0 | 0 |

**Note** Our IP 68 brass cable glands serve as a reference for these recommended values.

### Dimensions of mounting plate

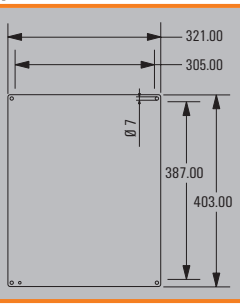

## Klippon® TB QL 453820

**Depth** 200 mm

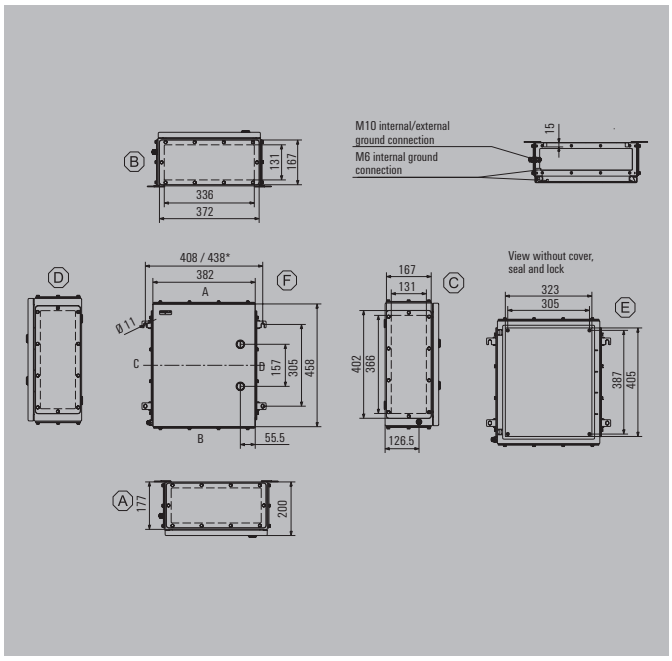


| | |
|---|---|
| Height/Width/Depth | 458 / 382 / 200 mm |

### Ordering data

| Stainless steel 1.4404 316L, electropolished | Order No. |
|---|---|
| 1 gland plate - bottom | 1200390000 |
| 2 gland plates - top and bottom sides (A & B) | 1200410000 |
| 3 gland plates - bottom, left and right sides (B, C & D) | 1200420000 |
| 4 gland plates - top, bottom, left and right sides (A, B, C & D) | 1200430000 |
| **Note** Painted sheet steel enclosure available on request. Standard colour is similar to RAL 7035. | |

### Accessories

| Mounting plates and fastening screws | Order No. |
|---|---|
| Steel sheet, zinc plated | 1193990000 |
| Stainless steel 1.4301 | 1193860000 |
| With hole pattern, natural stainless steel 1.4301 | 1257700000 |
| Fastening screws for mounting plates | 0642600000 |
| Fastening screws for terminal rails | 1274150000 |
| **Stainless steel spacer M6 x 8, Set of 4** | |
| 10 mm length | 0935110000 |
| 15 mm length | 0935120000 |
| 20 mm length | 0935130000 |
| 30 mm length | 0935140000 |
| **Gland plates and screws - 6 mm** | |
| Top and bottom sides (A & B), electropolished stainless steel 1.4404 | 1256510000 |
| Left and right sides (C & D), electropolished stainless steel 1.4404 | 1256520000 |
| Mounting screw, stainless steel 1.4404 | 1253230000 |
| **Mirror-polish Stainless steel 1.4301 rain hood (2R)** | |
| | 1281460000 |
| **Label holder** | |
| 70 x 70 angled stainless steel 1.4301 | 1279320000 |
| 130x50 stainless steel 1.4301 | 1283450000 |
| 100x25 stainless steel 1.4301 | 1257640000 |
| **Document holder** | |
| For DIN A6 size documents | 1252780000 |
| For DIN A5 size documents | 1252750000 |
| For DIN A4 size documents | 1252730000 |
| **Set of fixings** | |
| For label holders, rain hoods and document holders (rivet) | 1252190000 |
| For plastic (Trafolyte), identification plate (screw) | 1285200000 |
| **Earthing stud** | |
| Stainless steel 1.4404 | 1192690000 |

**Note**

### Max. number of terminals (industry)

| Max. number of terminals (industry) | vertical | horizontal |
|---|---|---|
| 2.5 mm² | 3x73 | 4x58 |
| 4 mm² | 2x62 | 3x48 |
| 6 mm² | 2x46 | 3x36 |
| 10 mm² | 2x37 | 2x29 |
| 16 mm² | 2x31 | 2x24 |
| 35 mm² | 1x23 | 1x18 |

**Note**

*For enclosure versions with zero, one or two gland plates, the horizontal gap between the mounting feet is reduced by 30 mm.
Assembly with terminal blocks provides for 10 mm clearance to the ends of the mounting rail.
Recommended order:
TS 35 mounting rail (screw terminal) WDU 2.5 1020000000 / (tension clamp terminal) ZDU 2.5 1608510000 / (tension clamp terminal) PDU 2.5 1896110000
TS 32 mounting rail (screw terminal) SAK 2.5 0279660000
TS 15 mounting rail (screw terminal) AKZ 2.5 0697160000

### Number of cable entries

| Number of cable entries | A / B | C / D |
|---|---|---|
| M12 | 50 | 55 |
| M16 | 34 | 38 |
| M20 | 23 | 24 |
| M25 | 18 | 21 |
| M32 | 10 | 11 |
| M40 | 8 | 9 |
| M50 | 4 | 4 |
| M63 | 3 | 3 |
| M75 | 2 | 3 |

**Note** Our IP 68 brass cable glands are used as the reference for these guideline values.

### Dimensions of mounting plate

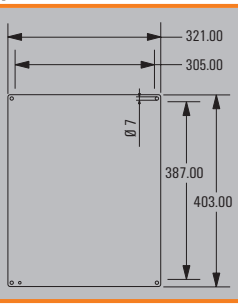

## Klippon® TB QL 484815

**Depth** 150 mm

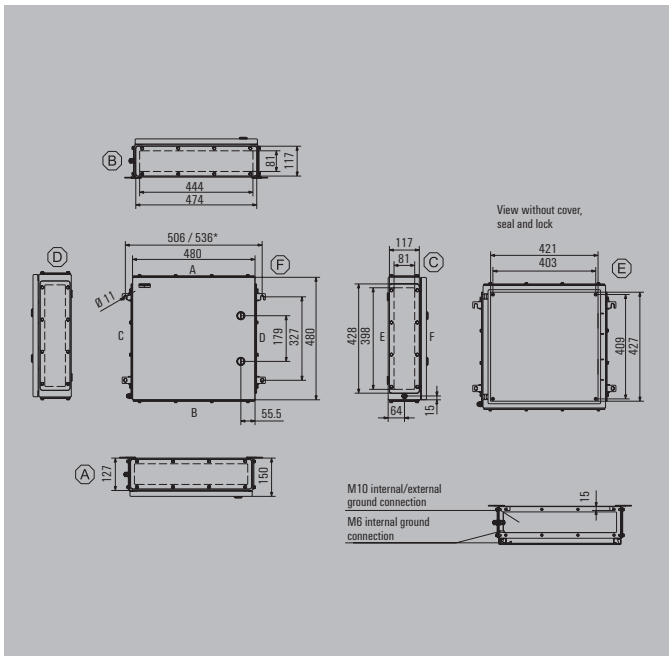


| | |
|---|---|
| Height/Width/Depth | 480 / 480 / 150 mm |

## Ordering data

| Stainless steel 1.4404 316L, electropolished | Order No. |
|---|---|
| 1 gland plate - bottom | 1200450000 |
| 2 gland plates - top and bottom sides (A & B) | 1200460000 |
| 3 gland plates - bottom, left and right sides (B, C & D) | 1200470000 |
| 4 gland plates - top, bottom, left and right sides (A, B, C & D) | 1200480000 |
| **Note** Painted sheet steel enclosure available on request. Standard colour is similar to RAL 7035. | |

## Max. number of terminals (industry)

| Max. number of terminals (industry) | vertical | horizontal |
|---|---|---|
| 2.5 mm² | 4x78 | 4x77 |
| 4 mm² | 3x65 | 3x64 |
| 6 mm² | 3x49 | 3x48 |
| 10 mm² | 2x39 | 3x39 |
| 16 mm² | 2x33 | 2x32 |
| 35 mm² | 1x25 | 2x24 |

**Note** *For enclosure versions with zero, one or two gland plates, the horizontal gap between the mounting feet is reduced by 30 mm.
Assembly with terminal blocks provides for 10 mm clearance to the ends of the mounting rail.
Recommended order:
TS 35 mounting rail (screw terminal) WDU 2.5 1020000000 / (tension clamp terminal) ZDU 2.5 1608510000 / (tension clamp terminal) PDU 2.5 1896110000
TS 32 mounting rail (screw terminal) SAK 2.5 0279660000
TS 15 mounting rail (screw terminal) AKZ 2.5 0697160000

## Accessories

| Mounting plates and fastening screws | Order No. |
|---|---|
| Steel sheet, zinc plated | 1194000000 |
| Stainless steel 1.4301 | 1193870000 |
| With hole pattern, natural stainless steel 1.4301 | 1257710000 |
| Fastening screws for mounting plates | 0642600000 |
| Fastening screws for terminal rails | 1274150000 |
| **Stainless steel spacer M6 x 8, Set of 4** | |
| 10 mm length | 0935110000 |
| 15 mm length | 0935120000 |
| 20 mm length | 0935130000 |
| 30 mm length | 0935140000 |
| **Gland plates and screws - 6 mm** | |
| Top and bottom sides (A & B), electropolished stainless steel 1.4404 | 1256530000 |
| Left and right sides (C & D), electropolished stainless steel 1.4404 | 1256540000 |
| Mounting screw, stainless steel 1.4404 | 1253230000 |
| **Mirror-polish Stainless steel 1.4301 rain hood (2R)** | |
| | 1281470000 |
| **Label holder** | |
| 70 x 70 angled stainless steel 1.4301 | 1279320000 |
| 130x50 stainless steel 1.4301 | 1283450000 |
| 100x25 stainless steel 1.4301 | 1257640000 |
| **Document holder** | |
| For DIN A6 size documents | 1252780000 |
| For DIN A5 size documents | 1252750000 |
| For DIN A4 size documents | 1252730000 |
| **Set of fixings** | |
| For label holders, rain hoods and document holders (rivet) | 1252190000 |
| For plastic (Trafolyte), identification plate (screw) | 1285200000 |
| **Earthing stud** | |
| Stainless steel 1.4404 | 1192690000 |

**Note**

## Number of cable entries

| Number of cable entries | A / B | C / D |
|---|---|---|
| M12 | 39 | 36 |
| M16 | 22 | 20 |
| M20 | 19 | 17 |
| M25 | 8 | 7 |
| M32 | 7 | 6 |
| M40 | 6 | 5 |
| M50 | 5 | 4 |
| M63 | 0 | 0 |
| M75 | 0 | 0 |

**Note** Our IP 68 brass cable glands are used as the reference for these guideline values.

## Dimensions of mounting plate

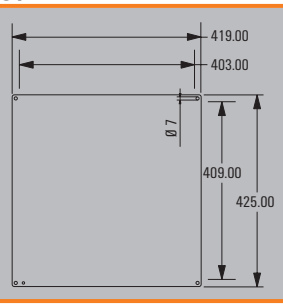

## Klippon® TB QL 484820

**Depth** 200 mm

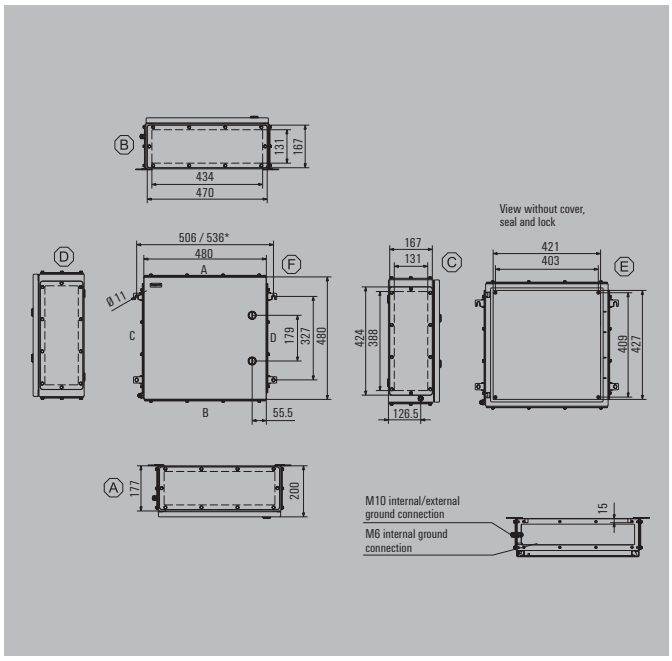


| | |
|---|---|
| Height/Width/Depth | 480 / 480 / 200 mm |

### Ordering data

| Stainless steel 1.4404 316L, electropolished | Order No. |
|---|---|
| 1 gland plate - bottom | 1200510000 |
| 2 gland plates - top and bottom sides (A & B) | 1200520000 |
| 3 gland plates - bottom, left and right sides (B, C & D) | 1200530000 |
| 4 gland plates - top, bottom, left and right sides (A, B, C & D) | 1200540000 |
| **Note** Painted sheet steel enclosure available on request. Standard colour is similar to RAL 7035. | |

### Accessories

| Mounting plates and fastening screws | Order No. |
|---|---|
| Steel sheet, zinc plated | 1194000000 |
| Stainless steel 1.4301 | 1193870000 |
| With hole pattern, natural stainless steel 1.4301 | 1257710000 |
| Fastening screws for mounting plates | 0642600000 |
| Fastening screws for terminal rails | 1274150000 |
| **Stainless steel spacer M6 x 8, Set of 4** | |
| 10 mm length | 0935110000 |
| 15 mm length | 0935120000 |
| 20 mm length | 0935130000 |
| 30 mm length | 0935140000 |
| **Gland plates and screws - 6 mm** | |
| Top and bottom sides (A & B), electropolished stainless steel 1.4404 | 1256550000 |
| Left and right sides (C & D), electropolished stainless steel 1.4404 | 1256560000 |
| Mounting screw, stainless steel 1.4404 | 1253230000 |
| **Mirror-polish Stainless steel 1.4301 rain hood (2R)** | |
| | 1281480000 |
| **Label holder** | |
| 70 x 70 angled stainless steel 1.4301 | 1279320000 |
| 130x50 stainless steel 1.4301 | 1283450000 |
| 100x25 stainless steel 1.4301 | 1257640000 |
| **Document holder** | |
| For DIN A6 size documents | 1252780000 |
| For DIN A5 size documents | 1252750000 |
| For DIN A4 size documents | 1252730000 |
| **Set of fixings** | |
| For label holders, rain hoods and document holders (rivet) | 1252190000 |
| For plastic (Trafolyte), identification plate (screw) | 1285200000 |
| **Earthing stud** | |
| Stainless steel 1.4404 | 1192690000 |

**Note**

### Max. number of terminals (industry)

| Max. number of terminals (industry) | vertical | horizontal |
|---|---|---|
| 2.5 mm² | 4x78 | 4x77 |
| 4 mm² | 3x65 | 3x64 |
| 6 mm² | 3x49 | 3x48 |
| 10 mm² | 2x39 | 3x39 |
| 16 mm² | 2x33 | 2x32 |
| 35 mm² | 1x25 | 2x24 |

**Note** *For enclosure versions with zero, one or two gland plates, the horizontal gap between the mounting feet is reduced by 30 mm.
Assembly with terminal blocks provides for 10 mm clearance to the ends of the mounting rail.
Recommended order:
TS 35 mounting rail (screw terminal) WDU 2.5 1020000000 / (tension clamp terminal) ZDU 2.5 1608510000 / (tension clamp terminal) PDU 2.5 1896110000
TS 32 mounting rail (screw terminal) SAK 2.5 0279660000
TS 15 mounting rail (screw terminal) AKZ 2.5 0697160000

### Number of cable entries

| Number of cable entries | A / B | C / D |
|---|---|---|
| M12 | 65 | 60 |
| M16 | 44 | 40 |
| M20 | 29 | 26 |
| M25 | 24 | 21 |
| M32 | 13 | 12 |
| M40 | 11 | 10 |
| M50 | 5 | 4 |
| M63 | 4 | 4 |
| M75 | 3 | 3 |

**Note** Our IP 68 brass cable glands serve as a reference for these recommended values.

### Dimensions of mounting plate

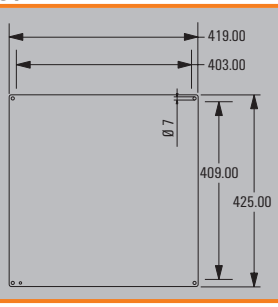

## Klippon® TB QL 553515

**Depth** 150 mm

| Height/Width/Depth | 550 / 350 / 150 mm |
|---|---|

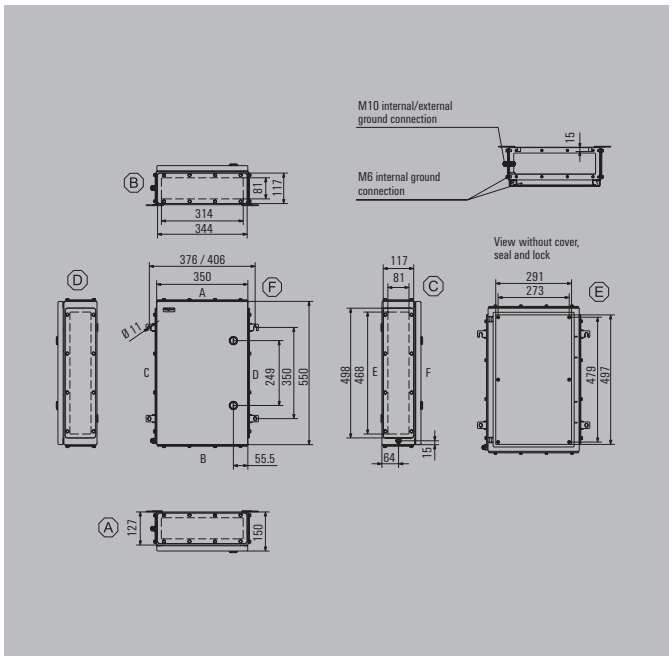


### Ordering data

| Stainless steel 1.4404 316L, electropolished | Order No. |
|---|---|
| 1 gland plate - bottom | 1200560000 |
| 2 gland plates - top and bottom sides (A & B) | 1200570000 |
| 3 gland plates - bottom, left and right sides (B, C & D) | 1200580000 |
| 4 gland plates - top, bottom, left and right sides (A, B, C & D) | 1200590000 |
| **Note** | Painted sheet steel enclosure available on request. Standard colour is similar to RAL 7035. |

### Accessories

| Mounting plates and fastening screws | Order No. |
|---|---|
| Steel sheet, zinc plated | 1194010000 |
| Stainless steel 1.4301 | 1193880000 |
| With hole pattern, natural stainless steel 1.4301 | 1257720000 |
| Fastening screws for mounting plates | 0642600000 |
| Fastening screws for terminal rails | 1274150000 |
| **Stainless steel spacer M6 x 8, Set of 4** | |
| 10 mm length | 0935110000 |
| 15 mm length | 0935120000 |
| 20 mm length | 0935130000 |
| 30 mm length | 0935140000 |
| **Gland plates and screws - 6 mm** | |
| Top and bottom sides (A & B), electropolished stainless steel 1.4404 | 1256570000 |
| Left and right sides (C & D), electropolished stainless steel 1.4404 | 1256580000 |
| Mounting screw, stainless steel 1.4404 | 1253230000 |
| **Mirror-polish Stainless steel 1.4301 rain hood (2R)** | |
| | 1281490000 |
| **Label holder** | |
| 70 x 70 angled stainless steel 1.4301 | 1279320000 |
| 130x50 stainless steel 1.4301 | 1283450000 |
| 100x25 stainless steel 1.4301 | 1257640000 |
| **Document holder** | |
| For DIN A6 size documents | 1252780000 |
| For DIN A5 size documents | 1252750000 |
| For DIN A4 size documents | |
| **Set of fixings** | |
| For label holders, rain hoods and document holders (rivet) | 1252190000 |
| For plastic (Trafolyte), identification plate (screw) | 1285200000 |
| **Earthing stud** | |
| Stainless steel 1.4404 | 1192690000 |

**Note**

### Max. number of terminals (industry)

| Max. number of terminals (industry) | vertical | horizontal |
|---|---|---|
| 2.5 mm² | 2x91 | 4x52 |
| 4 mm² | 2x76 | 4x43 |
| 6 mm² | 2x58 | 4x32 |
| 10 mm² | 2x46 | 3x26 |
| 16 mm² | 1x39 | 3x22 |
| 35 mm² | 1x29 | 2x16 |

**Note**

*For enclosure versions with zero, one or two gland plates, the horizontal gap between the mounting feet is reduced by 30 mm.
Assembly with terminal blocks provides for 10 mm clearance to the ends of the mounting rail.
Recommended order:
TS 35 mounting rail (screw terminal) WDU 2.5 1020000000 / (tension clamp terminal) ZDU 2.5 1608510000 / (tension clamp terminal) PDU 2.5 1896110000
TS 32 mounting rail (screw terminal) SAK 2.5 0279660000
TS 15 mounting rail (screw terminal) AKZ 2.5 0697160000

### Number of cable entries

| Number of cable entries | A / B | C / D |
|---|---|---|
| M12 | 27 | 42 |
| M16 | 15 | 24 |
| M20 | 13 | 20 |
| M25 | 6 | 9 |
| M32 | 5 | 7 |
| M40 | 4 | 6 |
| M50 | 3 | 5 |
| M63 | 0 | 0 |
| M75 | 0 | 0 |

**Note** Our IP 68 brass cable glands are used as the reference for these guideline values.

### Dimensions of mounting plate

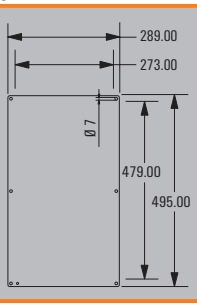

## Klippon® TB QL 553520

**Depth** 200 mm

| Height/Width/Depth | 550 / 350 / 200 mm |
|---|---|

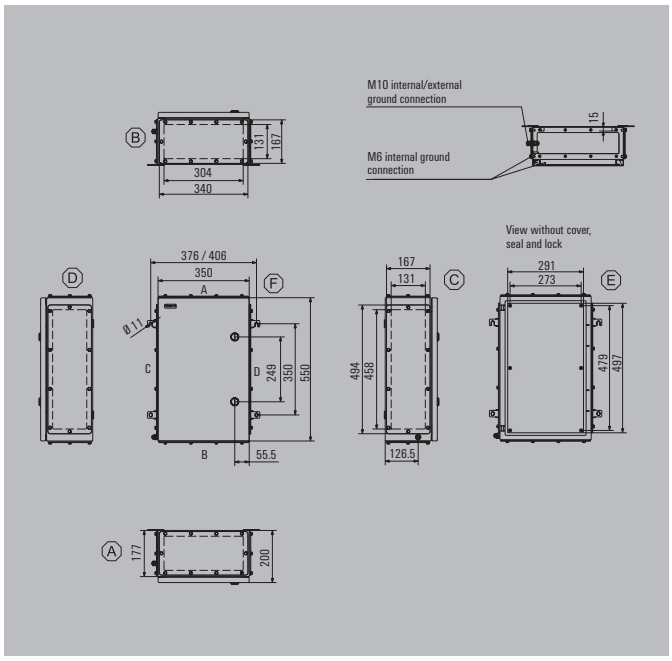


### Ordering data

| Stainless steel 1.4404 316L, electropolished | Order No. |
|---|---|
| 1 gland plate - bottom | 1200620000 |
| 2 gland plates - top and bottom sides (A & B) | 1200630000 |
| 3 gland plates - bottom, left and right sides (B, C & D) | 1200640000 |
| 4 gland plates - top, bottom, left and right sides (A, B, C & D) | 1200650000 |
| **Note** | Painted sheet steel enclosure available on request. Standard colour is similar to RAL 7035. |

### Accessories

| Mounting plates and fastening screws | Order No. |
|---|---|
| Steel sheet, zinc plated | 1194010000 |
| Stainless steel 1.4301 | 1193880000 |
| With hole pattern, natural stainless steel 1.4301 | 1257720000 |
| Fastening screws for mounting plates | 0642600000 |
| Fastening screws for terminal rails | 1274150000 |
| **Stainless steel spacer M6 x 8, Set of 4** | |
| 10 mm length | 0935110000 |
| 15 mm length | 0935120000 |
| 20 mm length | 0935130000 |
| 30 mm length | 0935140000 |
| **Gland plates and screws - 6 mm** | |
| Top and bottom sides (A & B), electropolished stainless steel 1.4404 | 1256590000 |
| Left and right sides (C & D), electropolished stainless steel 1.4404 | 1256610000 |
| Mounting screw, stainless steel 1.4404 | 1253230000 |
| **Mirror-polish Stainless steel 1.4301 rain hood (2R)** | |
| | 1281500000 |
| **Label holder** | |
| 70 x 70 angled stainless steel 1.4301 | 1279320000 |
| 130x50 stainless steel 1.4301 | 1283450000 |
| 100x25 stainless steel 1.4301 | 1257640000 |
| **Document holder** | |
| For DIN A6 size documents | 1252780000 |
| For DIN A5 size documents | 1252750000 |
| For DIN A4 size documents | |
| **Set of fixings** | |
| For label holders, rain hoods and document holders (rivet) | 1252190000 |
| For plastic (Trafolyte), identification plate (screw) | 1285200000 |
| **Earthing stud** | |
| Stainless steel 1.4404 | 1192690000 |

**Note**

### Max. number of terminals (industry)

| Max. number of terminals (industry) | vertical | horizontal |
|---|---|---|
| 2.5 mm² | 2x91 | 4x52 |
| 4 mm² | 2x76 | 4x43 |
| 6 mm² | 2x58 | 4x32 |
| 10 mm² | 2x46 | 3x26 |
| 16 mm² | 1x39 | 3x22 |
| 35 mm² | 1x29 | 2x16 |

**Note**

*For enclosure versions with zero, one or two gland plates, the horizontal gap between the mounting feet is reduced by 30 mm.
Assembly with terminal blocks provides for 10 mm clearance to the ends of the mounting rail.
Recommended order:
TS 35 mounting rail (screw terminal) WDU 2.5 1020000000 / (tension clamp terminal) ZDU 2.5 1608510000 / (tension clamp terminal) PDU 2.5 1896110000
TS 32 mounting rail (screw terminal) SAK 2.5 0279660000
TS 15 mounting rail (screw terminal) AKZ 2.5 0697160000

### Number of cable entries

| Number of cable entries | A / B | C / D |
|---|---|---|
| M12 | 45 | 70 |
| M16 | 30 | 48 |
| M20 | 20 | 30 |
| M25 | 17 | 26 |
| M32 | 9 | 14 |
| M40 | 7 | 12 |
| M50 | 3 | 5 |
| M63 | 3 | 4 |
| M75 | 2 | 3 |

**Note** Our IP 68 brass cable glands serve as a reference for these recommended values.

### Dimensions of mounting plate

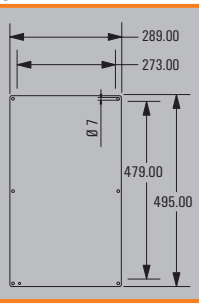

## Klippon® TB QL 624515

**Depth** 150 mm

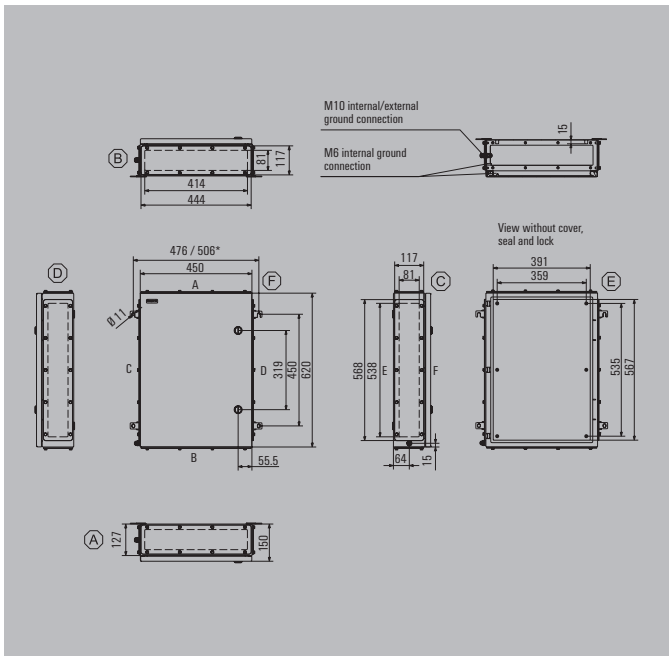


| Height/Width/Depth | 620 / 450 / 150 mm |
|---|---|

## Ordering data

| Stainless steel 1.4404 316L, electropolished | Order No. |
|---|---|
| 1 gland plate - bottom | 1200670000 |
| 2 gland plates - top and bottom sides (A & B) | 1200680000 |
| 3 gland plates - bottom, left and right sides (B, C & D) | 1200690000 |
| 4 gland plates - top, bottom, left and right sides (A, B, C & D) | 1200710000 |
| **Note** | Painted sheet steel enclosure available on request. Standard colour is similar to RAL 7035. |

## Accessories

| Mounting plates and fastening screws | Order No. |
|---|---|
| Steel sheet, zinc plated | 1194020000 |
| Stainless steel 1.4301 | 1193890000 |
| With hole pattern, natural stainless steel 1.4301 | 1257740000 |
| Fastening screws for mounting plates | 0642600000 |
| Fastening screws for terminal rails | 1274150000 |
| **Stainless steel spacer M6 x 8, Set of 4** | |
| 10 mm length | 0935110000 |
| 15 mm length | 0935120000 |
| 20 mm length | 0935130000 |
| 30 mm length | 0935140000 |
| **Gland plates and screws - 6 mm** | |
| Top and bottom sides (A & B), electropolished stainless steel 1.4404 | 1256620000 |
| Left and right sides (C & D), electropolished stainless steel 1.4404 | 1256630000 |
| Mounting screw, stainless steel 1.4404 | 1253230000 |
| **Mirror-polish Stainless steel 1.4301 rain hood (2R)** | |
| | 1281510000 |
| **Label holder** | |
| 70 x 70 angled stainless steel 1.4301 | 1279320000 |
| 130x50 stainless steel 1.4301 | 1283450000 |
| 100x25 stainless steel 1.4301 | 1257640000 |
| **Document holder** | |
| For DIN A6 size documents | 1252780000 |
| For DIN A5 size documents | 1252750000 |
| For DIN A4 size documents | 1252730000 |
| **Set of fixings** | |
| For label holders, rain hoods and document holders (rivet) | 1252190000 |
| For plastic (Trafolyte), identification plate (screw) | 1285200000 |
| **Earthing stud** | |
| Stainless steel 1.4404 | 1192690000 |

**Note**

## Max. number of terminals (industry)

| Max. number of terminals (industry) | vertical | horizontal |
|---|---|---|
| 2.5 mm² | 3x105 | 5x71 |
| 4 mm² | 3x88 | 5x59 |
| 6 mm² | 3x66 | 4x45 |
| 10 mm² | 2x53 | 4x36 |
| 16 mm² | 2x44 | 3x30 |
| 35 mm² | 1x33 | 2x22 |

**Note**

*For enclosure versions with zero, one or two gland plates, the horizontal gap between the mounting feet is reduced by 30 mm.
Assembly with terminal blocks provides for 10 mm clearance to the ends of the mounting rail.
Recommended order:
TS 35 mounting rail (screw terminal) WDU 2.5 1020000000 / (tension clamp terminal) ZDU 2.5 1608510000 / (tension clamp terminal) PDU 2.5 1896110000
TS 32 mounting rail (screw terminal) SAK 2.5 0279660000
TS 15 mounting rail (screw terminal) AKZ 2.5 0697160000

## Number of cable entries

| Number of cable entries | A / B | C / D |
|---|---|---|
| M12 | 38 | 48 |
| M16 | 21 | 27 |
| M20 | 18 | 24 |
| M25 | 8 | 10 |
| M32 | 6 | 9 |
| M40 | 5 | 7 |
| M50 | 4 | 6 |
| M63 | 0 | 0 |
| M75 | 0 | 0 |

**Note** Our IP 68 brass cable glands are used as the reference for these guideline values.

## Dimensions of mounting plate

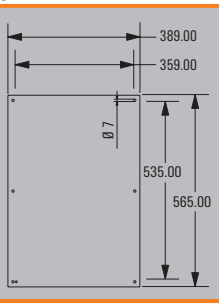

## Klippon® TB QL 624520

**Depth** 200 mm

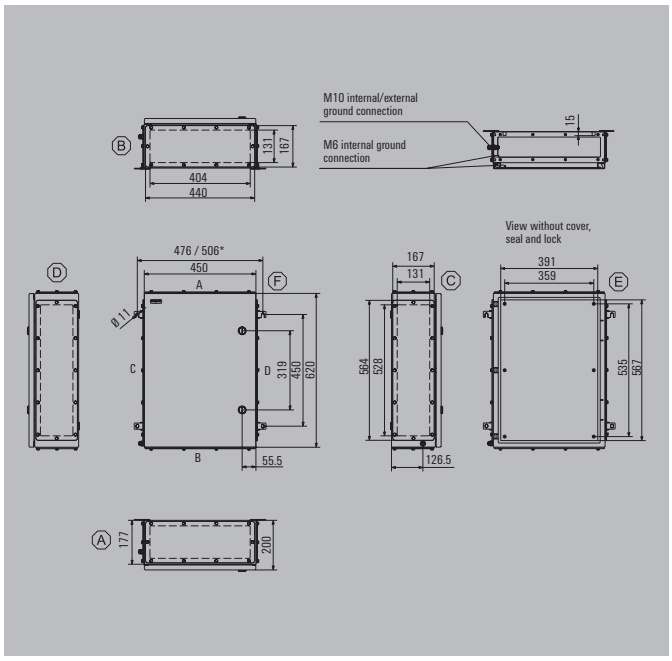


| | |
|---|---|
| Height/Width/Depth | 620 / 450 / 200 mm |

### Ordering data

| Stainless steel 1.4404 316L, electropolished | Order No. |
|---|---|
| 1 gland plate - bottom | 1200730000 |
| 2 gland plates - top and bottom sides (A & B) | 1200740000 |
| 3 gland plates - bottom, left and right sides (B, C & D) | 1200750000 |
| 4 gland plates - top, bottom, left and right sides (A, B, C & D) | 1200760000 |

**Note** Painted sheet steel enclosure available on request. Standard colour is similar to RAL 7035.

### Accessories

| Mounting plates and fastening screws | Order No. |
|---|---|
| Steel sheet, zinc plated | 1194020000 |
| Stainless steel 1.4301 | 1193890000 |
| With hole pattern, natural stainless steel 1.4301 | 1257740000 |
| Fastening screws for mounting plates | 0642600000 |
| Fastening screws for terminal rails | 1274150000 |
| **Stainless steel spacer M6 x 8, Set of 4** | |
| 10 mm length | 0935110000 |
| 15 mm length | 0935120000 |
| 20 mm length | 0935130000 |
| 30 mm length | 0935140000 |
| **Gland plates and screws - 6 mm** | |
| Top and bottom sides (A & B), electropolished stainless steel 1.4404 | 1256640000 |
| Left and right sides (C & D), electropolished stainless steel 1.4404 | 1256650000 |
| Mounting screw, stainless steel 1.4404 | 1253230000 |
| **Mirror-polish Stainless steel 1.4301 rain hood (2R)** | |
| | 1281520000 |
| **Label holder** | |
| 70 x 70 angled stainless steel 1.4301 | 1279320000 |
| 130x50 stainless steel 1.4301 | 1283450000 |
| 100x25 stainless steel 1.4301 | 1257640000 |
| **Document holder** | |
| For DIN A6 size documents | 1252780000 |
| For DIN A5 size documents | 1252750000 |
| For DIN A4 size documents | 1252730000 |
| **Set of fixings** | |
| For label holders, rain hoods and document holders (rivet) | 1252190000 |
| For plastic (Trafolyte), identification plate (screw) | 1285200000 |
| **Earthing stud** | |
| Stainless steel 1.4404 | 1192690000 |

**Note**

### Max. number of terminals (industry)

| Max. number of terminals (industry) | vertical | horizontal |
|---|---|---|
| 2.5 mm² | 3x105 | 5x71 |
| 4 mm² | 3x88 | 5x59 |
| 6 mm² | 3x66 | 4x45 |
| 10 mm² | 2x53 | 4x36 |
| 16 mm² | 2x44 | 3x30 |
| 35 mm² | 1x33 | 2x22 |

**Note**
*For enclosure versions with zero, one or two gland plates, the horizontal gap between the mounting feet is reduced by 30 mm.
Assembly with terminal blocks provides for 10 mm clearance to the ends of the mounting rail.
Recommended order:
TS 35 mounting rail (screw terminal) WDU 2.5 1020000000 / (tension clamp terminal) ZDU 2.5 1608510000 / (tension clamp terminal) PDU 2.5 1896110000
TS 32 mounting rail (screw terminal) SAK 2.5 0279660000
TS 15 mounting rail (screw terminal) AKZ 2.5 0697160000

### Number of cable entries

| Number of cable entries | A / B | C / D |
|---|---|---|
| M12 | 63 | 80 |
| M16 | 42 | 54 |
| M20 | 27 | 36 |
| M25 | 23 | 30 |
| M32 | 12 | 17 |
| M40 | 10 | 14 |
| M50 | 4 | 6 |
| M63 | 4 | 5 |
| M75 | 3 | 4 |

**Note** Our IP 68 brass cable glands serve as a reference for these recommended values.

### Dimensions of mounting plate

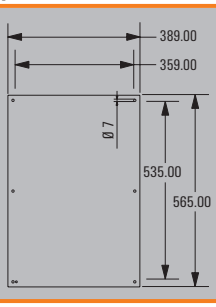

## Klippon® TB QL 765015

**Depth** 150 mm

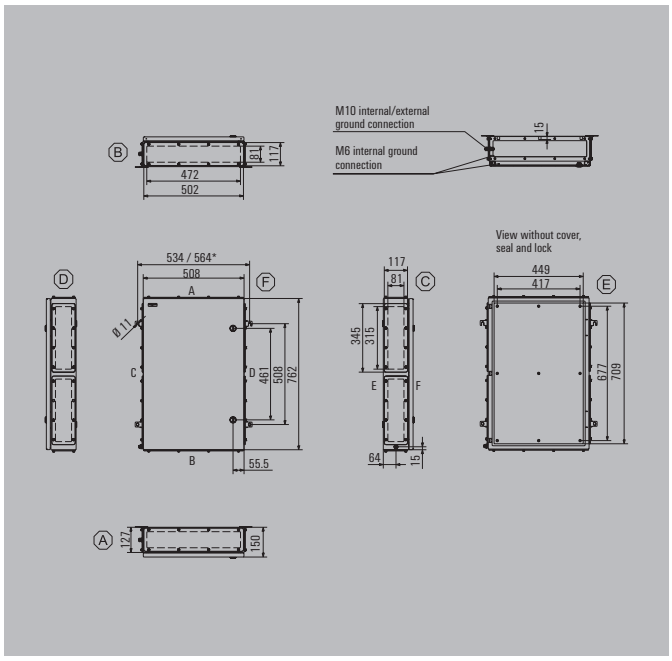


| Height/Width/Depth | 762 / 508 / 150 mm |
|---|---|

## Ordering data

| Stainless steel 1.4404 316L, electropolished | Order No. |
|---|---|
| 1 gland plate - bottom | 1200780000 |
| 2 gland plates - top and bottom sides (A & B) | 1200790000 |
| 3 gland plates - bottom, left and right sides (B, C & D) | 1200810000 |
| 4 gland plates - top, bottom, left and right sides (A, B, C & D) | 1200820000 |
| **Note** Painted sheet steel enclosure available on request. Standard colour is similar to RAL 7035. | |

## Accessories

| Mounting plates and fastening screws | Order No. |
|---|---|
| Steel sheet, zinc plated | 1194030000 |
| Stainless steel 1.4301 | 1193900000 |
| With hole pattern, natural stainless steel 1.4301 | 1257750000 |
| Fastening screws for mounting plates | 0642600000 |
| Fastening screws for terminal rails | 1274150000 |
| **Stainless steel spacer M6 x 8, Set of 4** | |
| 10 mm length | 0935110000 |
| 15 mm length | 0935120000 |
| 20 mm length | 0935130000 |
| 30 mm length | 0935140000 |
| **Gland plates and screws - 6 mm** | |
| Top and bottom sides (A & B), electropolished stainless steel 1.4404 | 1256660000 |
| Left and right sides (C & D), electropolished stainless steel 1.4404 | 1256670000 |
| Mounting screw, stainless steel 1.4404 | 1253230000 |
| **Mirror-polish Stainless steel 1.4301 rain hood (2R)** | |
| | 1281530000 |
| **Label holder** | |
| 70 x 70 angled stainless steel 1.4301 | 1279320000 |
| 130x50 stainless steel 1.4301 | 1283450000 |
| 100x25 stainless steel 1.4301 | 1257640000 |
| **Document holder** | |
| For DIN A6 size documents | 1252780000 |
| For DIN A5 size documents | 1252750000 |
| For DIN A4 size documents | 1252730000 |
| **Set of fixings** | |
| For label holders, rain hoods and document holders (rivet) | 1252190000 |
| For plastic (Trafolyte), identification plate (screw) | 1285200000 |
| **Earthing stud** | |
| Stainless steel 1.4404 | 1192690000 |

**Note**

## Max. number of terminals (industry)

| Max. number of terminals (industry) | vertical | horizontal |
|---|---|---|
| 2.5 mm² | 4x132 | 7x82 |
| 4 mm² | 4x111 | 6x69 |
| 6 mm² | 3x83 | 5x52 |
| 10 mm² | 3x67 | 5x42 |
| 16 mm² | 2x56 | 4x35 |
| 35 mm² | 2x42 | 3x26 |

**Note** *For enclosure versions with zero, one or two gland plates, the horizontal gap between the mounting feet is reduced by 30 mm.
Assembly with terminal blocks provides for 10 mm clearance to the ends of the mounting rail.
Recommended order:
TS 35 mounting rail (screw terminal) WDU 2.5 1020000000 / (tension clamp terminal) ZDU 2.5 1608510000 / (tension clamp terminal) PDU 2.5 1896110000
TS 32 mounting rail (screw terminal) SAK 2.5 0279660000
TS 15 mounting rail (screw terminal) AKZ 2.5 0697160000

## Number of cable entries

| Number of cable entries | A / B | C / D |
|---|---|---|
| M12 | 42 | 58 |
| M16 | 24 | 32 |
| M20 | 21 | 26 |
| M25 | 9 | 12 |
| M32 | 7 | 10 |
| M40 | 6 | 8 |
| M50 | 5 | 6 |
| M63 | 0 | 0 |
| M75 | 0 | 0 |

**Note** Our IP 68 brass cable glands serve as a reference for these recommended values.

## Dimensions of mounting plate

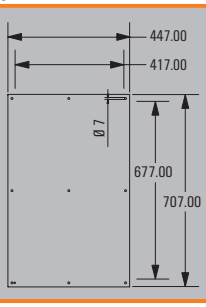

## Klippon® TB QL 765020

**Depth** 200 mm

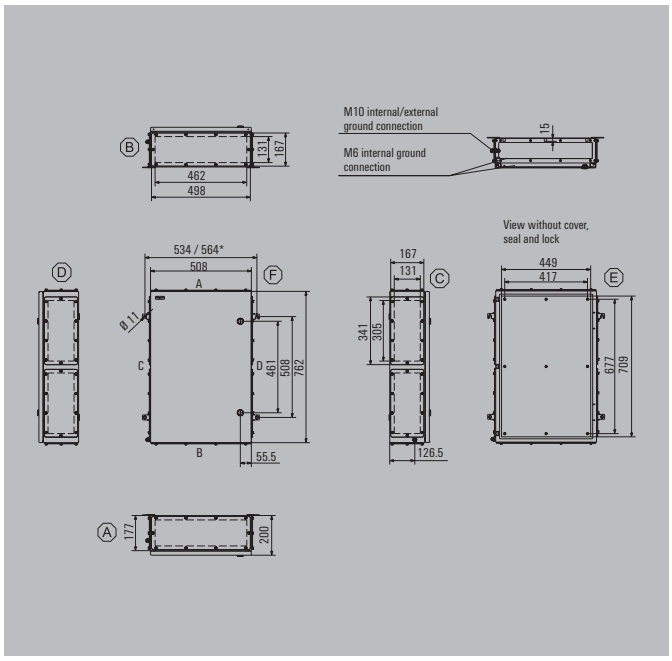


| | |
|---|---|
| Height/Width/Depth | 762 / 508 / 200 mm |

### Ordering data

| Stainless steel 1.4404 316L, electropolished | Order No. |
|---|---|
| 1 gland plate - bottom | 1200840000 |
| 2 gland plates - top and bottom sides (A & B) | 1200850000 |
| 3 gland plates - bottom, left and right sides (B, C & D) | 1200860000 |
| 4 gland plates - top, bottom, left and right sides (A, B, C & D) | 1200870000 |

**Note** Painted sheet steel enclosure available on request. Standard colour is similar to RAL 7035.

### Accessories

| Mounting plates and fastening screws | Order No. |
|---|---|
| Steel sheet, zinc plated | 1194030000 |
| Stainless steel 1.4301 | 1193900000 |
| With hole pattern, natural stainless steel 1.4301 | 1257750000 |
| Fastening screws for mounting plates | 0642600000 |
| Fastening screws for terminal rails | 1274150000 |
| **Stainless steel spacer M6 x 8, Set of 4** | |
| 10 mm length | 0935110000 |
| 15 mm length | 0935120000 |
| 20 mm length | 0935130000 |
| 30 mm length | 0935140000 |
| **Gland plates and screws - 6 mm** | |
| Top and bottom sides (A & B), electropolished stainless steel 1.4404 | 1256680000 |
| Left and right sides (C & D), electropolished stainless steel 1.4404 | 1256690000 |
| Mounting screw, stainless steel 1.4404 | 1253230000 |
| **Mirror-polish Stainless steel 1.4301 rain hood (2R)** | |
| | 1281540000 |
| **Label holder** | |
| 70 x 70 angled stainless steel 1.4301 | 1279320000 |
| 130x50 stainless steel 1.4301 | 1283450000 |
| 100x25 stainless steel 1.4301 | 1257640000 |
| **Document holder** | |
| For DIN A6 size documents | 1252780000 |
| For DIN A5 size documents | 1252750000 |
| For DIN A4 size documents | 1252730000 |
| **Set of fixings** | |
| For label holders, rain hoods and document holders (rivet) | 1252190000 |
| For plastic (Trafolyte), identification plate (screw) | 1285200000 |
| **Earthing stud** | |
| Stainless steel 1.4404 | 1192690000 |

**Note**

### Max. number of terminals (industry)

| Max. number of terminals (industry) | vertical | horizontal |
|---|---|---|
| 2.5 mm² | 4x132 | 7x82 |
| 4 mm² | 4x111 | 6x69 |
| 6 mm² | 3x83 | 5x52 |
| 10 mm² | 3x67 | 5x42 |
| 16 mm² | 2x56 | 4x35 |
| 35 mm² | 2x42 | 3x26 |

**Note** *For enclosure versions with zero, one or two gland plates, the horizontal gap between the mounting feet is reduced by 30 mm.
Assembly with terminal blocks provides for 10 mm clearance to the ends of the mounting rail.
Recommended order:
TS 35 mounting rail (screw terminal) WDU 2.5 1020000000 / (tension clamp terminal) ZDU 2.5 1608510000 / (tension clamp terminal) PDU 2.5 1896110000
TS 32 mounting rail (screw terminal) SAK 2.5 0279660000
TS 15 mounting rail (screw terminal) AKZ 2.5 0697160000

### Number of cable entries

| Number of cable entries | A / B | C / D |
|---|---|---|
| M12 | 70 | 96 |
| M16 | 48 | 64 |
| M20 | 32 | 40 |
| M25 | 26 | 34 |
| M32 | 14 | 18 |
| M40 | 12 | 14 |
| M50 | 5 | 6 |
| M63 | 4 | 6 |
| M75 | 3 | 4 |

**Note** Our IP 68 brass cable glands are used as the reference for these guideline values.

### Dimensions of mounting plate

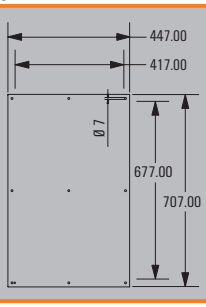

## Klippon® TB QL 916115

**Depth** 150 mm

| Height/Width/Depth | 914 / 610 / 150 mm |
|---|---|

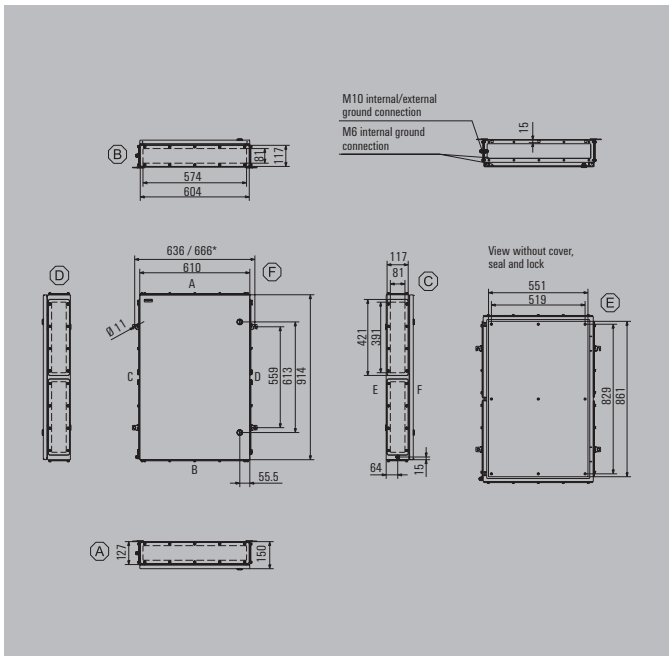


### Ordering data

| Stainless steel 1.4404 316L, electropolished | Order No. |
|---|---|
| 1 gland plate - bottom | 1200890000 |
| 2 gland plates - top and bottom sides (A & B) | 1200910000 |
| 3 gland plates - bottom, left and right sides (B, C & D) | 1200920000 |
| 4 gland plates - top, bottom, left and right sides (A, B, C & D) | 1200930000 |
| **Note** | Painted sheet steel enclosure available on request. Standard colour is similar to RAL 7035. |

### Accessories

| Mounting plates and fastening screws | Order No. |
|---|---|
| Steel sheet, zinc plated | 1194040000 |
| Stainless steel 1.4301 | 1193910000 |
| With hole pattern, natural stainless steel 1.4301 | 1257760000 |
| Fastening screws for mounting plates | 0642600000 |
| Fastening screws for terminal rails | 1274150000 |
| **Stainless steel spacer M6 x 8, Set of 4** | |
| 10 mm length | 0935110000 |
| 15 mm length | 0935120000 |
| 20 mm length | 0935130000 |
| 30 mm length | 0935140000 |
| **Gland plates and screws - 6 mm** | |
| Top and bottom sides (A & B), electropolished stainless steel 1.4404 | 1256710000 |
| Left and right sides (C & D), electropolished stainless steel 1.4404 | 1256720000 |
| Mounting screw, stainless steel 1.4404 | 1253230000 |
| **Mirror-polish Stainless steel 1.4301 rain hood (2R)** | |
| | 1281550000 |
| **Label holder** | |
| 70 x 70 angled stainless steel 1.4301 | 1279320000 |
| 130x50 stainless steel 1.4301 | 1283450000 |
| 100x25 stainless steel 1.4301 | 1257640000 |
| **Document holder** | |
| For DIN A6 size documents | 1252780000 |
| For DIN A5 size documents | 1252750000 |
| For DIN A4 size documents | 1252730000 |
| **Set of fixings** | |
| For label holders, rain hoods and document holders (rivet) | 1252190000 |
| For plastic (Trafolyte), identification plate (screw) | 1285200000 |
| **Earthing stud** | |
| Stainless steel 1.4404 | 1192690000 |

**Note**

### Max. number of terminals (industry)

| Max. number of terminals (industry) | vertical | horizontal |
|---|---|---|
| 2.5 mm² | 5x161 | 8x102 |
| 4 mm² | 4x135 | 7x85 |
| 6 mm² | 4x102 | 7x64 |
| 10 mm² | 3x82 | 6x52 |
| 16 mm² | 3x68 | 5x43 |
| 35 mm² | 2x51 | 4x32 |

**Note**

*For enclosure versions with zero, one or two gland plates, the horizontal gap between the mounting feet is reduced by 30 mm.
Assembly with terminal blocks provides for 10 mm clearance to the ends of the mounting rail.
Recommended order:
TS 35 mounting rail (screw terminal) WDU 2.5 1020000000 / (tension clamp terminal) ZDU 2.5 1608510000 / (tension clamp terminal) PDU 2.5 1896110000
TS 32 mounting rail (screw terminal) SAK 2.5 0279660000
TS 15 mounting rail (screw terminal) AKZ 2.5 0697160000

### Number of cable entries

| Number of cable entries | A / B | C / D |
|---|---|---|
| M12 | 53 | 70 |
| M16 | 29 | 40 |
| M20 | 25 | 34 |
| M25 | 11 | 14 |
| M32 | 9 | 12 |
| M40 | 8 | 10 |
| M50 | 6 | 8 |
| M63 | 0 | 0 |
| M75 | 0 | 0 |

**Note** Our IP 68 brass cable glands are used as the reference for these guideline values.

### Dimensions of mounting plate

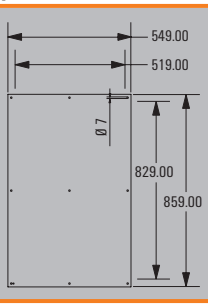

## Klippon® TB QL 916120

**Depth** 200 mm

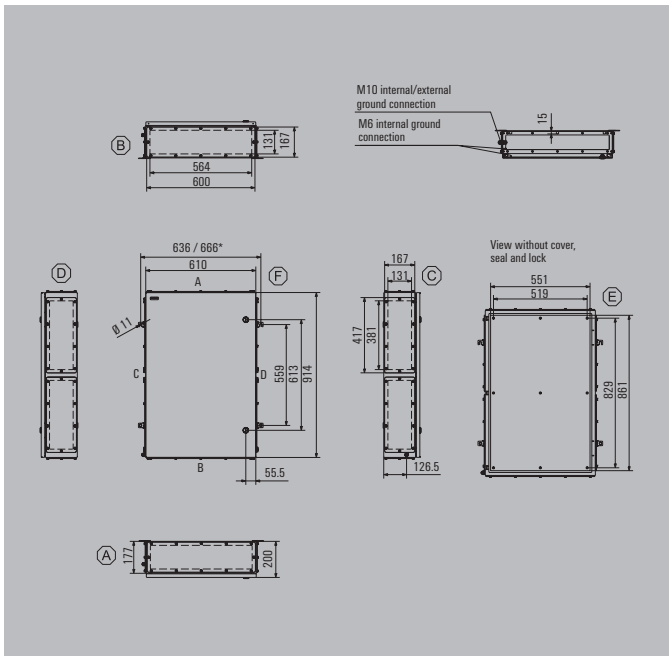


| Height/Width/Depth | 914 / 610 / 200 mm |
|---|---|

## Ordering data

| Stainless steel 1.4404 316L, electropolished | Order No. |
|---|---|
| 1 gland plate - bottom | 1200950000 |
| 2 gland plates - top and bottom sides (A & B) | 1200960000 |
| 3 gland plates - bottom, left and right sides (B, C & D) | 1200970000 |
| 4 gland plates - top, bottom, left and right sides (A, B, C & D) | 1200980000 |
| **Note** | Painted sheet steel enclosure available on request. Standard colour is similar to RAL 7035. |

## Accessories

| Mounting plates and fastening screws | Order No. |
|---|---|
| Steel sheet, zinc plated | 1194040000 |
| Stainless steel 1.4301 | 1193910000 |
| With hole pattern, natural stainless steel 1.4301 | 1257760000 |
| Fastening screws for mounting plates | 0642600000 |
| Fastening screws for terminal rails | 1274150000 |
| **Stainless steel spacer M6 x 8, Set of 4** | |
| 10 mm length | 0935110000 |
| 15 mm length | 0935120000 |
| 20 mm length | 0935130000 |
| 30 mm length | 0935140000 |
| **Gland plates and screws - 6 mm** | |
| Top and bottom sides (A & B), electropolished stainless steel 1.4404 | 1256730000 |
| Left and right sides (C & D), electropolished stainless steel 1.4404 | 1256740000 |
| Mounting screw, stainless steel 1.4404 | 1253230000 |
| **Mirror-polish Stainless steel 1.4301 rain hood (2R)** | |
| | 1281570000 |
| **Label holder** | |
| 70 x 70 angled stainless steel 1.4301 | 1279320000 |
| 130x50 stainless steel 1.4301 | 1283450000 |
| 100x25 stainless steel 1.4301 | 1257640000 |
| **Document holder** | |
| For DIN A6 size documents | 1252780000 |
| For DIN A5 size documents | 1252750000 |
| For DIN A4 size documents | 1252730000 |
| **Set of fixings** | |
| For label holders, rain hoods and document holders (rivet) | 1252190000 |
| For plastic (Trafolyte), identification plate (screw) | 1285200000 |
| **Earthing stud** | |
| Stainless steel 1.4404 | 1192690000 |

**Note**

## Max. number of terminals (industry)

| Max. number of terminals (industry) | vertical | horizontal |
|---|---|---|
| 2.5 mm² | 5x161 | 8x102 |
| 4 mm² | 4x135 | 7x85 |
| 6 mm² | 4x102 | 7x64 |
| 10 mm² | 3x82 | 6x52 |
| 16 mm² | 3x68 | 5x43 |
| 35 mm² | 2x51 | 4x32 |

**Note**

*For enclosure versions with zero, one or two gland plates, the horizontal gap between the mounting feet is reduced by 30 mm.
Assembly with terminal blocks provides for 10 mm clearance to the ends of the mounting rail.
Recommended order:
TS 35 mounting rail (screw terminal) WDU 2.5 1020000000 / (tension clamp terminal) ZDU 2.5 1608510000 / (tension clamp terminal) PDU 2.5 1896110000
TS 32 mounting rail (screw terminal) SAK 2.5 0279660000
TS 15 mounting rail (screw terminal) AKZ 2.5 0697160000

## Number of cable entries

| Number of cable entries | A / B | C / D |
|---|---|---|
| M12 | 88 | 116 |
| M16 | 58 | 80 |
| M20 | 38 | 52 |
| M25 | 33 | 42 |
| M32 | 18 | 24 |
| M40 | 15 | 20 |
| M50 | 6 | 8 |
| M63 | 5 | 6 |
| M75 | 4 | 6 |

**Note** Our IP 68 brass cable glands serve as a reference for these recommended values.

## Dimensions of mounting plate

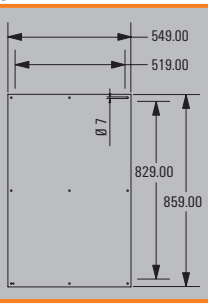

## Klippon® TB QL 987420

**Depth** **200 mm**

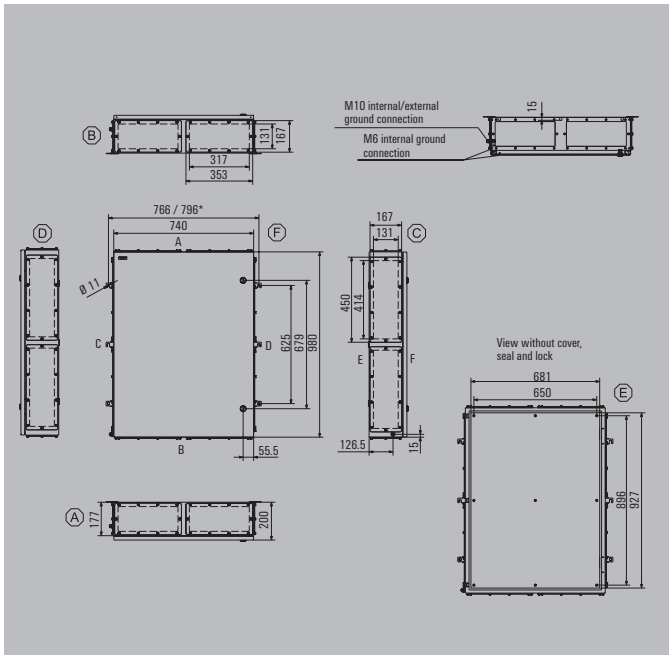


| Height/Width/Depth | 980 / 740 / 200 mm |
|---|---|

## Ordering data

| Stainless steel 1.4404 316L, electropolished | Order No. |
|---|---|
| 1 gland plate - bottom | 1201010000 |
| 2 gland plates - top and bottom sides (A & B) | 1201020000 |
| 3 gland plates - bottom, left and right sides (B, C & D) | 1201030000 |
| 4 gland plates - top, bottom, left and right sides (A, B, C & D) | 1201040000 |
| **Note** | Painted sheet steel enclosure available on request. Standard colour is similar to RAL 7035. |

## Accessories

| Mounting plates and fastening screws | Order No. |
|---|---|
| Steel sheet, zinc plated | 1194050000 |
| Stainless steel 1.4301 | 1193920000 |
| With hole pattern, natural stainless steel 1.4301 | 1257770000 |
| Fastening screws for mounting plates | 0642600000 |
| Fastening screws for terminal rails | 1274150000 |
| **Stainless steel spacer M6 x 8, Set of 4** | |
| 10 mm length | 0935110000 |
| 15 mm length | 0935120000 |
| 20 mm length | 0935130000 |
| 30 mm length | 0935140000 |
| **Gland plates and screws - 6 mm** | |
| Top and bottom sides (A & B), electropolished stainless steel 1.4404 | 1256750000 |
| Left and right sides (C & D), electropolished stainless steel 1.4404 | 1256760000 |
| Mounting screw, stainless steel 1.4404 | 1253230000 |
| **Mirror-polish Stainless steel 1.4301 rain hood (2R)** | |
| | 1281580000 |
| **Label holder** | |
| 70 x 70 angled stainless steel 1.4301 | 1279320000 |
| 130x50 stainless steel 1.4301 | 1283450000 |
| 100x25 stainless steel 1.4301 | 1257640000 |
| **Document holder** | |
| For DIN A6 size documents | 1252780000 |
| For DIN A5 size documents | 1252750000 |
| For DIN A4 size documents | 1252730000 |
| **Set of fixings** | |
| For label holders, rain hoods and document holders (rivet) | 1252190000 |
| For plastic (Trafolyte), identification plate (screw) | 1285200000 |
| **Earthing stud** | |
| Stainless steel 1.4404 | 1192690000 |

**Note**

## Max. number of terminals (industry)

| Max. number of terminals (industry) | vertical | horizontal |
|---|---|---|
| 2.5 mm² | 6x174 | 9x127 |
| 4 mm² | 6x146 | 8x106 |
| 6 mm² | 5x110 | 7x80 |
| 10 mm² | 4x88 | 6x64 |
| 16 mm² | 4x74 | 5x54 |
| 35 mm² | 3x55 | 4x40 |

**Note**

*For enclosure versions with zero, one or two gland plates, the horizontal gap between the mounting feet is reduced by 30 mm.
Assembly with terminal blocks provides for 10 mm clearance to the ends of the mounting rail.
Recommended order:
TS 35 mounting rail (screw terminal) WDU 2.5 1020000000 / (tension clamp terminal) ZDU 2.5 1608510000 / (tension clamp terminal) PDU 2.5 1896110000
TS 32 mounting rail (screw terminal) SAK 2.5 0279660000
TS 15 mounting rail (screw terminal) AKZ 2.5 0697160000

## Number of cable entries

| Number of cable entries | A / B | C / D |
|---|---|---|
| M12 | 96 | 126 |
| M16 | 64 | 84 |
| M20 | 42 | 54 |
| M25 | 36 | 48 |
| M32 | 20 | 26 |
| M40 | 16 | 22 |
| M50 | 6 | 10 |
| M63 | 6 | 8 |
| M75 | 4 | 6 |

**Note** Our IP 68 brass cable glands serve as a reference for these recommended values.

## Dimensions of mounting plate

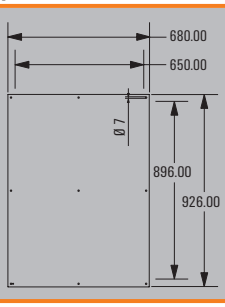

# Klippon® TB FS - Fixing Screw

**Steel enclosures**
**for use in industrial and in explosive hazard areas**

The Klippon® TB enclosure range features superior performance characteristics, even in the most extreme environmental surroundings. In addition, it meets the rigorous requirements of potentially explosive atmospheres that can be found in the process or power generation industries. The new Klippon® TB FS enclosure range complements our Klippon® TB MH and Klippon® TB QL standard enclosures.

Weidmüller can manufacture and supply this enclosure to match customer specifications and fitted with all necessary terminals and cable glands.

NEW

## Overview of enclosures

### Ordering data

| Description | Length x width x depth in mm | 1 Gland Plate (below) | 2 Gland Plates (above + below) | 3 Gland Plates (below + sides) | 4 Gland Plates (all sides) |
|---|---|---|---|---|---|
| KTB FS 221513 S4E_* | 229 x 152 x 133 | 1195660000 | 1195670000 | 1195680000 | 1195690000 |
| KTB FS 262615 S4E_* | 260 x 260 x 150 | 1195710000 | 1195720000 | 1195730000 | 1195740000 |
| KTB FS 262620 S4E_* | 260 x 260 x 200 | 1195760000 | 1195770000 | 1195780000 | 1195790000 |
| KTB FS 303015 S4E_* | 306 x 306 x 150 | 1195810000 | 1195820000 | 1195830000 | 1195840000 |
| KTB FS 303020 S4E_* | 306 x 306 x 200 | 1195860000 | 1195870000 | 1195880000 | 1195890000 |
| KTB FS 352615 S4E_* | 350 x 260 x 150 | 1195910000 | 1195920000 | 1195930000 | 1195940000 |
| KTB FS 352620 S4E_* | 350 x 260 x 200 | 1195960000 | 1195970000 | 1195980000 | 1195990000 |
| KTB FS 403015 S4E_* | 400 x 300 x 150 | 1196010000 | 1196020000 | 1196030000 | 1196040000 |
| KTB FS 403020 S4E_* | 400 x 300 x 200 | 1196060000 | 1196070000 | 1196080000 | 1196090000 |
| KTB FS 453815 S4E_* | 458 x 382 x 150 | 1196110000 | 1196120000 | 1196130000 | 1196140000 |
| KTB FS 453820 S4E_* | 458 x 382 x 200 | 1196160000 | 1196170000 | 1196180000 | 1196190000 |
| KTB FS 484815 S4E_* | 480 x 480 x 150 | 1196210000 | 1196220000 | 1196230000 | 1196240000 |
| KTB FS 484820 S4E_* | 480 x 480 x 200 | 1196260000 | 1196270000 | 1196280000 | 1196290000 |
| KTB FS 553515 S4E_* | 550 x 350 x 150 | 1196310000 | 1196320000 | 1196330000 | 1196340000 |
| KTB FS 553520 S4E_* | 550 x 350 x 200 | 1196360000 | 1196370000 | 1196380000 | 1196390000 |
| KTB FS 624515 S4E_* | 620 x 450 x 150 | 1196410000 | 1196420000 | 1196430000 | 1196440000 |
| KTB FS 624520 S4E_* | 620 x 450 x 200 | 1196460000 | 1196470000 | 1196480000 | 1196490000 |
| KTB FS 765015 S4E_* | 762 x 508 x 150 | 1196510000 | 1196520000 | 1196530000 | 1196540000 |
| KTB FS 765020 S4E_* | 762 x 508 x 200 | 1196560000 | 1196570000 | 1196580000 | 1196590000 |
| KTB FS 916115 S4E_* | 914 x 610 x 150 | 1196610000 | 1196620000 | 1196630000 | 1196640000 |
| KTB FS 916120 S4E_* | 914 x 610 x 200 | 1196660000 | 1196670000 | 1196680000 | 1196690000 |
| KTB FS 987420 S4E_* | 980 x 740 x 200 | 1196710000 | 1196720000 | 1196730000 | 1196740000 |
| **Note** | | The Klippon® TB FS enclosures are only available on request and subject to a minimum order quantity.<br>* Placeholder for the number of flange plates (1, 2, 3, 4). Klippon® TB FS enclosures without flange plates are available on request. | | | |

## Technical Overview

### Features

| |
|---|
| • Available in 12 sizes and 3 standard depths |
| • Equipped with up to 4 gland plates |
| • The gasket is protected against compression |
| • Cover lock outside the sealed zone |
| • Improved temperature performance |
| • IP66/IP67 protection |
| • Earth studs in enclosure cover and bottom section |
| • Welded mounting feet |
| **Note** |

### Technical data

| | |
|---|---|
| Enclosure material | Stainless steel 1.4404 (316L) 1.5 mm |
| Surface | Electroplished |
| IP protection class | IP 66 / IP 67 (IP 66 to IEC EN 60079-0) |
| NEMA Rating | 3, 4x, 12 |
| Gland plates | 1 - 4 (fixed with M6 hexagon head screws with a slot and 10 mm heads), optionally without a gland plate |
| Gland plate thickness | 3 mm (other thickness of up to 20 mm are available on request) |
| Earthing inside | Enclosure base: welded M6 stainless steel earth studs |
| Earthing outside | Continuous M10 brass earth stud (optionally with stainless-steel earth stud) |
| Installation mounting | 4 or 9 mounting bolts with M6 threaded holes to attach the mounting plate or mounting rails |
| Enclosure attachment | by means of 4 welded-on mounting feet with 11 mm holes (2 slots and 2 circular mounting feet) |
| Lid opening | Fully removable lid |
| Lid fixing | M6 hexagon head slotted screws SW10 |
| Impact resistance | 7 J ATEX applications, 10 J industrial applications |
| Gasket material | Silicone |
| Operating temperature range* | -60 °C...+135 °C* |
| Torque - cover and flange plate screws** | 2.5 Nm |
| **Note** | *If used in temperature ranges above 105 °C, IP protection is limited to IP 66.<br>**For securing the cover we recommend our 10 mm hexagonal socket wrench (9009070000) |

### Approvals for empty enclosures

| | |
|---|---|
| ATEX certificate | KEMA 10ATEX0044 U |
| ATEX marking | II 2 G Ex e IIC Gb<br>II 2 D Ex tb IIIC Db IP66/67 |
| IECEx certificate | IECEx KEM 10.0013U |
| IECEx marking | Ex e IIC Gb<br>Ex tb IIIC Db IP66/67 |
| GOST Ex | POCC DE.ME92.B02036 |
| CCOE | P267536/1 |
| cULus | E243298 |
| Germanischer Lloyd | 11535 - 10 HH |
| Russian Maritime Register | 10.04094.250 |
| INMETRO | In preparation |
| **Note** | The Klippon® TB FS enclosure range can be pre-fitted in our customer specific production department according to your wishes;<br>as an example, terminals, or other approved components, can be installed as required. |

### Approvals for control and distribution box

| | |
|---|---|
| ATEX certificate | KEMA 10ATEX0048 |
| ATEX marking | II 2 G Ex e IIC T...Gb<br>II 1 G Ex ia IIC T...Ga<br>II 2(1) G Ex e [ia Ga] IIC T...Gb<br>II 2 D Ex tb IIIC T85 °C...T135 °C Db IP66/67 |
| IECEx certificate | IECEx KEM 10.0019 |
| IECEx marking | Ex e IIC T...Gb<br>Ex ia IIC T...Ga<br>Ex e [ia Ga] IIC T...Gb<br>Ex tb IIIC T85 °C...T135 °C Db IP66/67 |
| **Note** | |

# Integrate, expand and customise: the perfect supplement to every application

The fully structured range of system accessories for the Klippon® TB enclosure range allows you to easily adapt the enclosure to meet the specific requirements of every application.

The following options are available:

### 1 Document holder

Document holders for storage of important documents in the enclosure.

### 2 Earthing studs

Earthing studs are replaceable. Available in two versions – brass and stainless steel.

### 3 Gland plates

Gland plates are available as spares and also in various material thicknesses.

### 4 Mounting plates

Mounting plates with and without a drilling pattern, for horizontal and vertical mounting of rails, or components fitted directly.

### 5 Mounting hardware kits

Mounting hardware kits are available for quick and easy installation of label holders, mounting plates, gland plates, document holders and rain hoods.

### 6 Door stay

A door stay prevent the door from being closed unintentionally, regardless of the mounting position of the enclosure.
This item is **only** available Ex-works.

### 7 Locking systems

Various locking systems are available for the safe securing of the enclosure. There are padlocks for the Klippon® TB MH enclosures and a range of lock inserts for the Klippon® TB QL enclosures.

### 8 Type label holder

A range of label holders are available for product identification.

## Klippon® TB FS 221513

**Depth** 133 mm

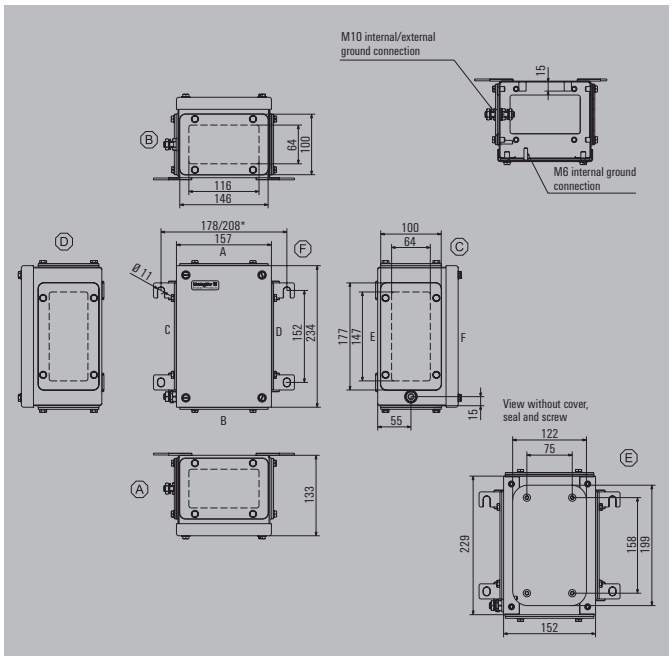


| Height/Width/Depth | 229 / 152 / 133 mm |
|---|---|

### Ordering data

| Stainless steel 1.4404 316L, electropolished | Order No. |
|---|---|
| 1 gland plate - bottom side (B) | 1195660000 |
| 2 gland plates - top and bottom sides (A & B) | 1195670000 |
| 3 gland plates - bottom, left and right sides (B, C & D) | 1195680000 |
| 4 gland plates - top, bottom, left and right sides (A, B, C & D) | 1195690000 |
| **Note** | Painted sheet steel enclosure available on request. The colours of painted enclosures may vary under certain circumstances. |

### Accessories

| Mounting plates and fastening screws | Order No. |
|---|---|
| Steel sheet, zinc plated | 1193930000 |
| Stainless steel 1.4301 | 1193810000 |
| With hole pattern, natural stainless steel 1.4301 | 1257650000 |
| Fastening screws for mounting plates | 0642600000 |
| Fastening screws for terminal rails | 1274150000 |
| **Stainless steel spacer M6 x 8, Set of 4** | |
| 10 mm length | 0935110000 |
| 15 mm length | 0935120000 |
| 20 mm length | 0935130000 |
| 30 mm length | 0935140000 |
| **Gland plates and screws - 6 mm** | |
| Top and bottom sides (A & B), electropolished stainless steel 1.4404 | 1256270000 |
| Left and right sides (C & D), electropolished stainless steel 1.4404 | 1256280000 |
| Mounting screw, stainless steel 1.4404 | 1253230000 |
| **Label holder** | |
| 70 x 70 angled stainless steel 1.4301 | 1279320000 |
| 130x50 stainless steel 1.4301 | 1283450000 |
| 100x25 stainless steel 1.4301 | 1257640000 |
| **Document holder** | |
| For DIN A6 size documents | |
| For DIN A5 size documents | |
| For DIN A4 size documents | |
| **Set of fixings** | |
| For label holders, rain hoods and document holders (rivet) | 1252190000 |
| For plastic (Trafolyte), identification plate (screw) | 1285200000 |
| **Earthing stud** | |
| Stainless steel 1.4404 | 1192690000 |

**Note**

### Max. number of terminals (industry)

| Max. number of terminals (industry) | vertical | horizontal |
|---|---|---|
| 2.5 mm² | 1x29 | 1x15 |
| 4 mm² | 1x22 | 1x13 |
| 6 mm² | 1x16 | 1x9 |
| 10 mm² | 1x13 | 1x7 |
| 16 mm² | 1x11 | 1x6 |
| 35 mm² | 1x8 | 1x3 |

**Note**

*For the enclosure versions with no, one or two gland plates, the horizontal distance between the mounting feet is reduced by 30 mm.
The assembly with modular terminals gives consideration to a distance of 10 mm from the end of each mounting rail.
Order recommendations:
TS 35 mounting rail (screw terminal) WDU 2.5 1020000000 / (tension clamp terminal) ZDU 2.5 1608510000 / (tension clamp terminal) PDU 2.5 1896110000
TS 32 mounting rail (screw terminal) SAK 2.5 0279660000
TS 15 mounting rail (screw terminal) AKZ 2.5 0697160000

### Number of cable entries

| Number of cable entries | A / B | C / D |
|---|---|---|
| M12 | 6 | 8 |
| M16 | 5 | 6 |
| M20 | 2 | 3 |
| M25 | 2 | 2 |
| M32 | 1 | 2 |
| M40 | 1 | 2 |
| M50 | 0 | 0 |
| M63 | 0 | 0 |
| M75 | 0 | 0 |
| **Note** | Our IP 68 brass cable glands are used as the reference for these guideline values. | |

### Dimensions of mounting plate

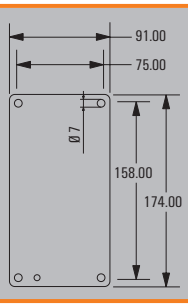

## Klippon® TB FS 262615

**Depth** 150 mm

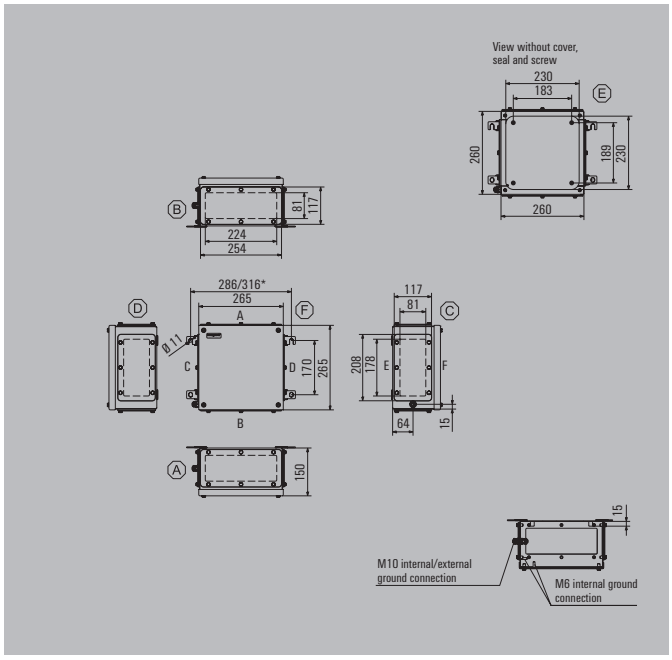


| Height/Width/Depth | 260 / 260 / 150 mm |
|---|---|

## Ordering data

| Stainless steel 1.4404 316L, electropolished | Order No. |
|---|---|
| 1 gland plate - bottom side (B) | 1195710000 |
| 2 gland plates - top and bottom sides (A & B) | 1195720000 |
| 3 gland plates - bottom, left and right sides (B, C & D) | 1195730000 |
| 4 gland plates - top, bottom, left and right sides (A, B, C & D) | 1195740000 |
| **Note** | Painted sheet steel enclosure available on request. The colours of painted enclosures may vary under certain circumstances. |

## Accessories

| Mounting plates and fastening screws | Order No. |
|---|---|
| Steel sheet, zinc plated | 1193950000 |
| Stainless steel 1.4301 | 1193820000 |
| With hole pattern, natural stainless steel 1.4301 | 1257660000 |
| Fastening screws for mounting plates | 0642600000 |
| Fastening screws for terminal rails | 1274150000 |
| **Stainless steel spacer M6 x 8, Set of 4** | |
| 10 mm length | 0935110000 |
| 15 mm length | 0935120000 |
| 20 mm length | 0935130000 |
| 30 mm length | 0935140000 |
| **Gland plates and screws - 6 mm** | |
| Top and bottom sides (A & B), electropolished stainless steel 1.4404 | 1256290000 |
| Left and right sides (C & D), electropolished stainless steel 1.4404 | 1256310000 |
| Mounting screw, stainless steel 1.4404 | 1253230000 |
| **Label holder** | |
| 70 x 70 angled stainless steel 1.4301 | 1279320000 |
| 130x50 stainless steel 1.4301 | 1283450000 |
| 100x25 stainless steel 1.4301 | 1257640000 |
| **Document holder** | |
| For DIN A6 size documents | 1252780000 |
| For DIN A5 size documents | |
| For DIN A4 size documents | |
| **Set of fixings** | |
| For label holders, rain hoods and document holders (rivet) | 1252190000 |
| For plastic (Trafolyte), identification plate (screw) | 1285200000 |
| **Earthing stud** | |
| Stainless steel 1.4404 | 1192690000 |

**Note**

## Max. number of terminals (industry)

| Max. number of terminals (industry) | vertical | horizontal |
|---|---|---|
| 2.5 mm² | 2x35 | 2x34 |
| 4 mm² | 1x30 | 1x29 |
| 6 mm² | 1x22 | 1x22 |
| 10 mm² | 1x18 | 1x17 |
| 16 mm² | 1x15 | 1x14 |
| 35 mm² | 1x10 | 1x10 |

**Note**

*For the enclosure versions with no, one or two gland plates, the horizontal distance between the mounting feet is reduced by 30 mm.
The assembly with modular terminals gives consideration to a distance of 10 mm from the end of each mounting rail.
Order recommendations:
TS 35 mounting rail (screw terminal) WDU 2.5 1020000000 / (tension clamp terminal) ZDU 2.5 1608510000 / (tension clamp terminal) PDU 2.5 1896110000
TS 32 mounting rail (screw terminal) SAK 2.5 0279660000
TS 15 mounting rail (screw terminal) AKZ 2.5 0697160000

## Number of cable entries

| Number of cable entries | A / B | C / D |
|---|---|---|
| M12 | 20 | 15 |
| M16 | 11 | 8 |
| M20 | 9 | 7 |
| M25 | 4 | 3 |
| M32 | 3 | 2 |
| M40 | 3 | 2 |
| M50 | 2 | 2 |
| M63 | 0 | 0 |
| M75 | 0 | 0 |

**Note** Our IP 68 brass cable glands are used as the reference for these guideline values.

## Dimensions of mounting plate

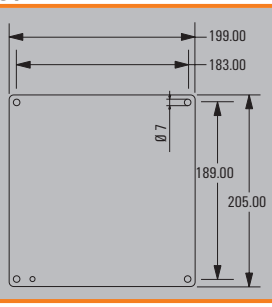

## Klippon® TB FS 262620

**Depth** 200 mm

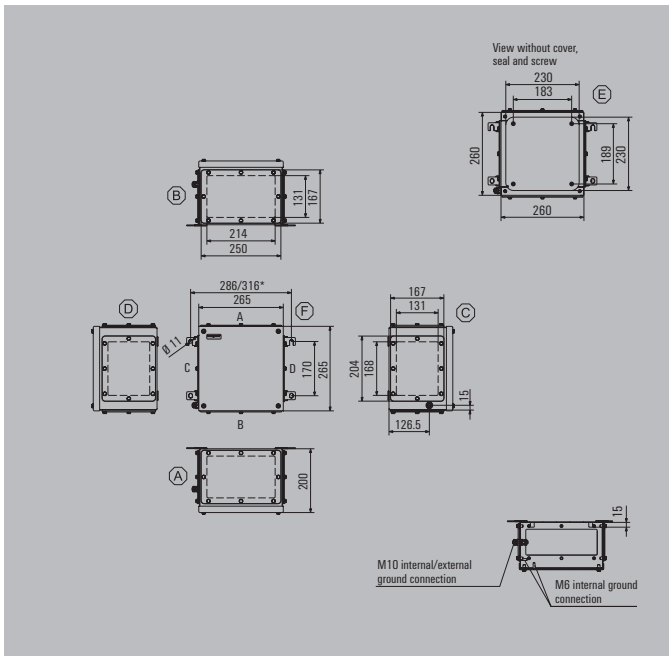


| Height/Width/Depth | 260 / 260 / 200 mm |
|---|---|

## Ordering data

| Stainless steel 1.4404 316L, electropolished | Order No. |
|---|---|
| 1 gland plate - bottom side (B) | 1195760000 |
| 2 gland plates - top and bottom sides (A & B) | 1195770000 |
| 3 gland plates - bottom, left and right sides (B, C & D) | 1195780000 |
| 4 gland plates - top, bottom, left and right sides (A, B, C & D) | 1195790000 |
| **Note** | Painted sheet steel enclosure available on request. The colours of painted enclosures may vary under certain circumstances. |

## Accessories

| Mounting plates and fastening screws | Order No. |
|---|---|
| Steel sheet, zinc plated | 1193950000 |
| Stainless steel 1.4301 | 1193820000 |
| With hole pattern, natural stainless steel 1.4301 | 1257660000 |
| Fastening screws for mounting plates | 0642600000 |
| Fastening screws for terminal rails | 1274150000 |
| **Stainless steel spacer M6 x 8, Set of 4** | |
| 10 mm length | 0935110000 |
| 15 mm length | 0935120000 |
| 20 mm length | 0935130000 |
| 30 mm length | 0935140000 |
| **Gland plates and screws - 6 mm** | |
| Top and bottom sides (A & B), electropolished stainless steel 1.4404 | 1256320000 |
| Left and right sides (C & D), electropolished stainless steel 1.4404 | 1256330000 |
| Mounting screw, stainless steel 1.4404 | 1253230000 |
| **Label holder** | |
| 70 x 70 angled stainless steel 1.4301 | 1279320000 |
| 130x50 stainless steel 1.4301 | 1283450000 |
| 100x25 stainless steel 1.4301 | 1257640000 |
| **Document holder** | |
| For DIN A6 size documents | 1252780000 |
| For DIN A5 size documents | |
| For DIN A4 size documents | |
| **Set of fixings** | |
| For label holders, rain hoods and document holders (rivet) | 1252190000 |
| For plastic (Trafolyte), identification plate (screw) | 1285200000 |
| **Earthing stud** | |
| Stainless steel 1.4404 | 1192690000 |

**Note**

## Max. number of terminals (industry)

| Max. number of terminals (industry) | vertical | horizontal |
|---|---|---|
| 2.5 mm² | 2x35 | 2x34 |
| 4 mm² | 1x30 | 1x29 |
| 6 mm² | 1x22 | 1x22 |
| 10 mm² | 1x18 | 1x17 |
| 16 mm² | 1x15 | 1x14 |
| 35 mm² | 1x10 | 1x10 |

**Note**

*For the enclosure versions with no, one or two gland plates, the horizontal distance between the mounting feet is reduced by 30 mm.
The assembly with modular terminals gives consideration to a distance of 10 mm from the end of each mounting rail.
Order recommendations:
TS 35 mounting rail (screw terminal) WDU 2.5 1020000000 / (tension clamp terminal) ZDU 2.5 1608510000 / (tension clamp terminal) PDU 2.5 1896110000
TS 32 mounting rail (screw terminal) SAK 2.5 0279660000
TS 15 mounting rail (screw terminal) AKZ 2.5 0697160000

## Number of cable entries

| Number of cable entries | A / B | C / D |
|---|---|---|
| M12 | 33 | 25 |
| M16 | 22 | 16 |
| M20 | 14 | 11 |
| M25 | 12 | 9 |
| M32 | 6 | 4 |
| M40 | 5 | 4 |
| M50 | 2 | 2 |
| M63 | 2 | 1 |
| M75 | 1 | 1 |

**Note** Our IP 68 brass cable glands are used as the reference for these guideline values.

## Dimensions of mounting plate

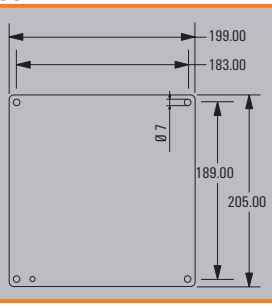

## Klippon® TB FS 303015

**Depth** 150 mm

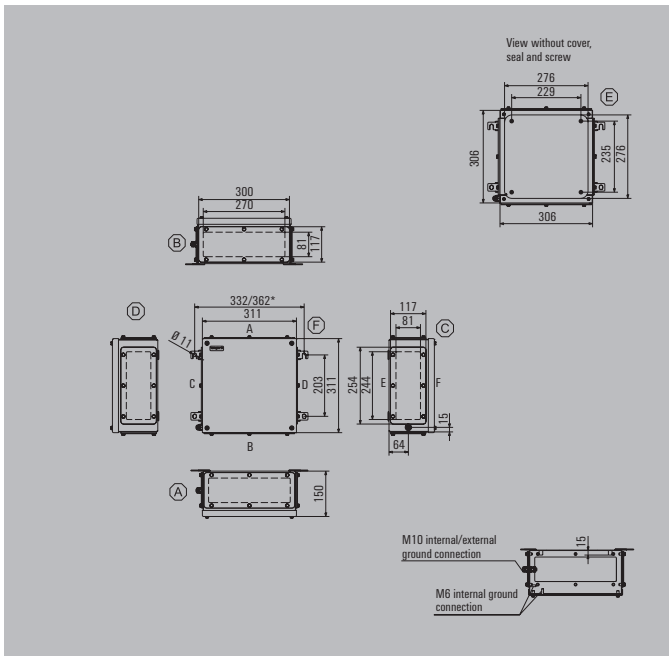


| Height/Width/Depth | 306 / 306 / 150 mm |
|---|---|

## Ordering data

| Stainless steel 1.4404 316L, electropolished | Order No. |
|---|---|
| 1 gland plate - bottom side (B) | 1195810000 |
| 2 gland plates - top and bottom sides (A & B) | 1195820000 |
| 3 gland plates - bottom, left and right sides (B, C & D) | 1195830000 |
| 4 gland plates - top, bottom, left and right sides (A, B, C & D) | 1195840000 |
| **Note** | Painted sheet steel enclosure available on request. The colours of painted enclosures may vary under certain circumstances. |

## Accessories

| Mounting plates and fastening screws | Order No. |
|---|---|
| Steel sheet, zinc plated | 1193960000 |
| Stainless steel 1.4301 | 1193830000 |
| With hole pattern, natural stainless steel 1.4301 | 1257670000 |
| Fastening screws for mounting plates | 0642600000 |
| Fastening screws for terminal rails | 1274150000 |
| **Stainless steel spacer M6 x 8, Set of 4** | |
| 10 mm length | 0935110000 |
| 15 mm length | 0935120000 |
| 20 mm length | 0935130000 |
| 30 mm length | 0935140000 |
| **Gland plates and screws - 6 mm** | |
| Top and bottom sides (A & B), electropolished stainless steel 1.4404 | 1256340000 |
| Left and right sides (C & D), electropolished stainless steel 1.4404 | 1256350000 |
| Mounting screw, stainless steel 1.4404 | 1253230000 |
| **Label holder** | |
| 70 x 70 angled stainless steel 1.4301 | 1279320000 |
| 130x50 stainless steel 1.4301 | 1283450000 |
| 100x25 stainless steel 1.4301 | 1257640000 |
| **Document holder** | |
| For DIN A6 size documents | 1252780000 |
| For DIN A5 size documents | 1252750000 |
| For DIN A4 size documents | |
| **Set of fixings** | |
| For label holders, rain hoods and document holders (rivet) | 1252190000 |
| For plastic (Trafolyte), identification plate (screw) | 1285200000 |
| **Earthing stud** | |
| Stainless steel 1.4404 | 1192690000 |

**Note**

## Max. number of terminals (industry)

| Max. number of terminals (industry) | vertical | horizontal |
|---|---|---|
| 2.5 mm² | 2x44 | 2x43 |
| 4 mm² | 2x37 | 2x36 |
| 6 mm² | 2x28 | 2x27 |
| 10 mm² | 1x22 | 1x22 |
| 16 mm² | 1x19 | 1x18 |
| 35 mm² | 1x14 | 1x13 |

**Note**

*For the enclosure versions with no, one or two gland plates, the horizontal distance between the mounting feet is reduced by 30 mm.
The assembly with modular terminals gives consideration to a distance of 10 mm from the end of each mounting rail.
Order recommendations:
TS 35 mounting rail (screw terminal) WDU 2.5 1020000000 / (tension clamp terminal) ZDU 2.5 1608510000 / (tension clamp terminal) PDU 2.5 1896110000
TS 32 mounting rail (screw terminal) SAK 2.5 0279660000
TS 15 mounting rail (screw terminal) AKZ 2.5 0697160000

## Number of cable entries

| Number of cable entries | A / B | C / D |
|---|---|---|
| M12 | 24 | 20 |
| M16 | 13 | 11 |
| M20 | 11 | 9 |
| M25 | 5 | 4 |
| M32 | 4 | 3 |
| M40 | 3 | 3 |
| M50 | 3 | 2 |
| M63 | 0 | 0 |
| M75 | 0 | 0 |

**Note** Our IP 68 brass cable glands are used as the reference for these guideline values.

## Dimensions of mounting plate

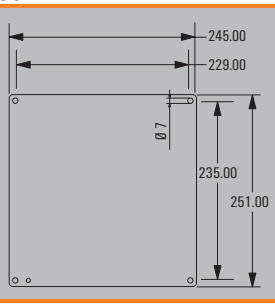

## Klippon® TB FS 303020

**Depth** 200 mm

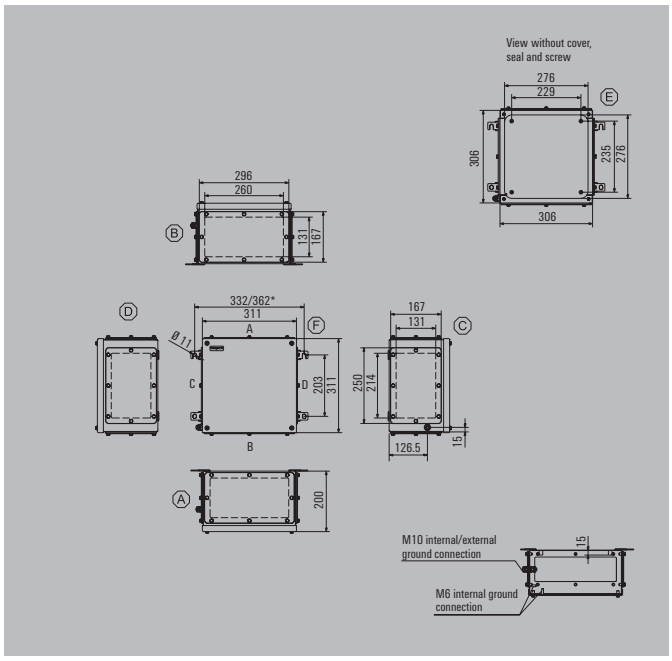


| | |
|---|---|
| Height/Width/Depth | 306 / 306 / 200 mm |

## Ordering data

| Stainless steel 1.4404 316L, electropolished | Order No. |
|---|---|
| 1 gland plate - bottom side (B) | 1195860000 |
| 2 gland plates - top and bottom sides (A & B) | 1195870000 |
| 3 gland plates - bottom, left and right sides (B, C & D) | 1195880000 |
| 4 gland plates - top, bottom, left and right sides (A, B, C & D) | 1195890000 |

**Note** Painted sheet steel enclosure available on request. The colours of painted enclosures may vary under certain circumstances.

## Accessories

| Mounting plates and fastening screws | Order No. |
|---|---|
| Steel sheet, zinc plated | 1193960000 |
| Stainless steel 1.4301 | 1193830000 |
| With hole pattern, natural stainless steel 1.4301 | 1257670000 |
| Fastening screws for mounting plates | 0642600000 |
| Fastening screws for terminal rails | 1274150000 |
| **Stainless steel spacer M6 x 8, Set of 4** | |
| 10 mm length | 0935110000 |
| 15 mm length | 0935120000 |
| 20 mm length | 0935130000 |
| 30 mm length | 0935140000 |
| **Gland plates and screws - 6 mm** | |
| Top and bottom sides (A & B), electropolished stainless steel 1.4404 | 1256360000 |
| Left and right sides (C & D), electropolished stainless steel 1.4404 | 1256370000 |
| Mounting screw, stainless steel 1.4404 | 1253230000 |
| **Label holder** | |
| 70 x 70 angled stainless steel 1.4301 | 1279320000 |
| 130x50 stainless steel 1.4301 | 1283450000 |
| 100x25 stainless steel 1.4301 | 1257640000 |
| **Document holder** | |
| For DIN A6 size documents | 1252780000 |
| For DIN A5 size documents | 1252750000 |
| For DIN A4 size documents | |
| **Set of fixings** | |
| For label holders, rain hoods and document holders (rivet) | 1252190000 |
| For plastic (Trafolyte), identification plate (screw) | 1285200000 |
| **Earthing stud** | |
| Stainless steel 1.4404 | 1192690000 |

**Note**

## Max. number of terminals (industry)

| Max. number of terminals (industry) | vertical | horizontal |
|---|---|---|
| 2.5 mm² | 2x44 | 2x43 |
| 4 mm² | 2x37 | 2x36 |
| 6 mm² | 2x28 | 2x27 |
| 10 mm² | 1x22 | 1x22 |
| 16 mm² | 1x19 | 1x18 |
| 35 mm² | 1x14 | 1x13 |

**Note**
*For the enclosure versions with no, one or two gland plates, the horizontal distance between the mounting feet is reduced by 30 mm.
The assembly with modular terminals gives consideration to a distance of 10 mm from the end of each mounting rail.
Order recommendations:
TS 35 mounting rail (screw terminal) WDU 2.5 1020000000 / (tension clamp terminal) ZDU 2.5 1608510000 / (tension clamp terminal) PDU 2.5 1896110000
TS 32 mounting rail (screw terminal) SAK 2.5 0279660000
TS 15 mounting rail (screw terminal) AKZ 2.5 0697160000

## Number of cable entries

| Number of cable entries | A / B | C / D |
|---|---|---|
| M12 | 40 | 33 |
| M16 | 26 | 22 |
| M20 | 17 | 14 |
| M25 | 14 | 12 |
| M32 | 8 | 6 |
| M40 | 6 | 5 |
| M50 | 3 | 2 |
| M63 | 2 | 2 |
| M75 | 2 | 1 |

**Note** Our IP 68 brass cable glands are used as the reference for these guideline values.

## Dimensions of mounting plate

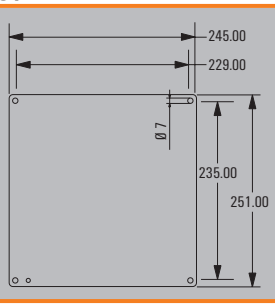

## Klippon® TB FS 352615

**Depth** 150 mm

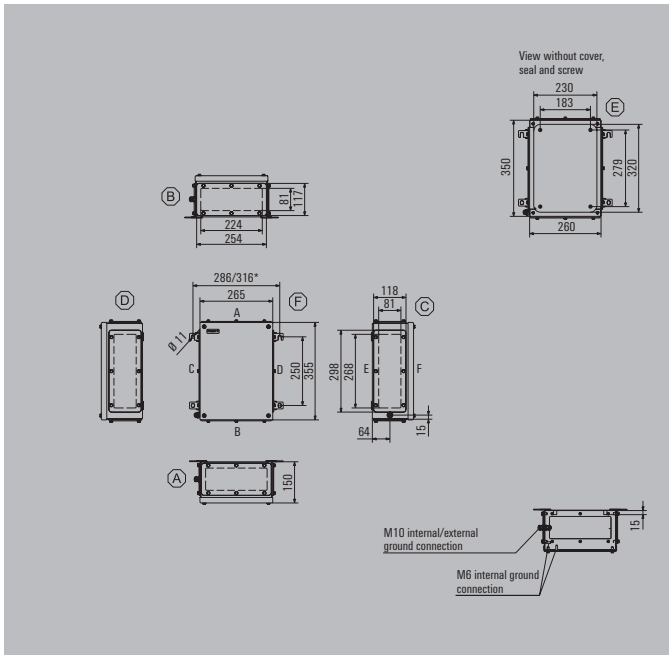


| Height/Width/Depth | 350 / 260 / 150 mm |
|---|---|

## Ordering data

| Stainless steel 1.4404 316L, electropolished | Order No. |
|---|---|
| 1 gland plate - bottom side (B) | 1195910000 |
| 2 gland plates - top and bottom sides (A & B) | 1195920000 |
| 3 gland plates - bottom, left and right sides (B, C & D) | 1195930000 |
| 4 gland plates - top, bottom, left and right sides (A, B, C & D) | 1195940000 |
| **Note** | Painted sheet steel enclosure available on request. The colours of painted enclosures may vary under certain circumstances. |

## Accessories

| Mounting plates and fastening screws | Order No. |
|---|---|
| Steel sheet, zinc plated | 1193970000 |
| Stainless steel 1.4301 | 1193840000 |
| With hole pattern, natural stainless steel 1.4301 | 1257680000 |
| Fastening screws for mounting plates | 0642600000 |
| Fastening screws for terminal rails | 1274150000 |
| **Stainless steel spacer M6 x 8, Set of 4** | |
| 10 mm length | 0935110000 |
| 15 mm length | 0935120000 |
| 20 mm length | 0935130000 |
| 30 mm length | 0935140000 |
| **Gland plates and screws - 6 mm** | |
| Top and bottom sides (A & B), electropolished stainless steel 1.4404 | 1256380000 |
| Left and right sides (C & D), electropolished stainless steel 1.4404 | 1256390000 |
| Mounting screw, stainless steel 1.4404 | 1253230000 |
| **Label holder** | |
| 70 x 70 angled stainless steel 1.4301 | 1279320000 |
| 130x50 stainless steel 1.4301 | 1283450000 |
| 100x25 stainless steel 1.4301 | 1257640000 |
| **Document holder** | |
| For DIN A6 size documents | 1252780000 |
| For DIN A5 size documents | 1252750000 |
| For DIN A4 size documents | |
| **Set of fixings** | |
| For label holders, rain hoods and document holders (rivet) | 1252190000 |
| For plastic (Trafolyte), identification plate (screw) | 1285200000 |
| **Earthing stud** | |
| Stainless steel 1.4404 | 1192690000 |

**Note**

## Max. number of terminals (industry)

| Max. number of terminals (industry) | vertical | horizontal |
|---|---|---|
| 2.5 mm² | 2x53 | 2x34 |
| 4 mm² | 1x44 | 2x29 |
| 6 mm² | 1x33 | 2x22 |
| 10 mm² | 1x27 | 2x17 |
| 16 mm² | 1x22 | 1x14 |
| 35 mm² | 1x15 | 1x11 |

**Note**

*For the enclosure versions with no, one or two gland plates, the horizontal distance between the mounting feet is reduced by 30 mm.
The assembly with modular terminals gives consideration to a distance of 10 mm from the end of each mounting rail.
Order recommendations:
TS 35 mounting rail (screw terminal) WDU 2.5 1020000000 / (tension clamp terminal) ZDU 2.5 1608510000 / (tension clamp terminal) PDU 2.5 1896110000
TS 32 mounting rail (screw terminal) SAK 2.5 0279660000
TS 15 mounting rail (screw terminal) AKZ 2.5 0697160000

## Number of cable entries

| Number of cable entries | A / B | C / D |
|---|---|---|
| M12 | 20 | 23 |
| M16 | 11 | 13 |
| M20 | 9 | 11 |
| M25 | 4 | 5 |
| M32 | 3 | 4 |
| M40 | 3 | 3 |
| M50 | 2 | 3 |
| M63 | 0 | 0 |
| M75 | 0 | 0 |

**Note** Our IP 68 brass cable glands are used as the reference for these guideline values.

## Dimensions of mounting plate

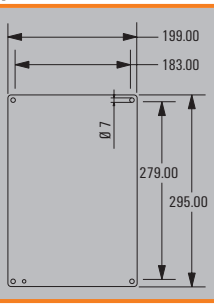

## Klippon® TB FS 352620

**Depth** 200 mm

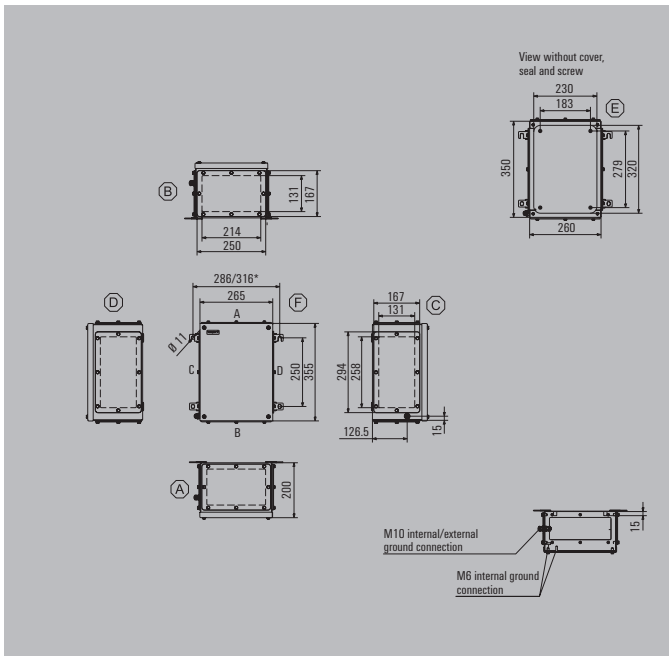


| Height/Width/Depth | 350 / 260 / 200 mm |
|---|---|

### Ordering data

| Stainless steel 1.4404 316L, electropolished | Order No. |
|---|---|
| 1 gland plate - bottom side (B) | 1195960000 |
| 2 gland plates - top and bottom sides (A & B) | 1195970000 |
| 3 gland plates - bottom, left and right sides (B, C & D) | 1195980000 |
| 4 gland plates - top, bottom, left and right sides (A, B, C & D) | 1195990000 |
| **Note** | Painted sheet steel enclosure available on request. The colours of painted enclosures may vary under certain circumstances. |

### Accessories

| Mounting plates and fastening screws | Order No. |
|---|---|
| Steel sheet, zinc plated | 1193970000 |
| Stainless steel 1.4301 | 1193840000 |
| With hole pattern, natural stainless steel 1.4301 | 1257680000 |
| Fastening screws for mounting plates | 0642600000 |
| Fastening screws for terminal rails | 1274150000 |
| **Stainless steel spacer M6 x 8, Set of 4** | |
| 10 mm length | 0935110000 |
| 15 mm length | 0935120000 |
| 20 mm length | 0935130000 |
| 30 mm length | 0935140000 |
| **Gland plates and screws - 6 mm** | |
| Top and bottom sides (A & B), electropolished stainless steel 1.4404 | 1256410000 |
| Left and right sides (C & D), electropolished stainless steel 1.4404 | 1256420000 |
| Mounting screw, stainless steel 1.4404 | 1253230000 |
| **Label holder** | |
| 70 x 70 angled stainless steel 1.4301 | 1279320000 |
| 130x50 stainless steel 1.4301 | 1283450000 |
| 100x25 stainless steel 1.4301 | 1257640000 |
| **Document holder** | |
| For DIN A6 size documents | 1252780000 |
| For DIN A5 size documents | 1252750000 |
| For DIN A4 size documents | |
| **Set of fixings** | |
| For label holders, rain hoods and document holders (rivet) | 1252190000 |
| For plastic (Trafolyte), identification plate (screw) | 1285200000 |
| **Earthing stud** | |
| Stainless steel 1.4404 | 1192690000 |

**Note**

### Max. number of terminals (industry)

| Max. number of terminals (industry) | vertical | horizontal |
|---|---|---|
| 2.5 mm² | 2x53 | 2x34 |
| 4 mm² | 1x44 | 2x29 |
| 6 mm² | 1x33 | 2x22 |
| 10 mm² | 1x27 | 2x17 |
| 16 mm² | 1x22 | 1x14 |
| 35 mm² | 1x15 | 1x11 |

**Note**

*For the enclosure versions with no, one or two gland plates, the horizontal distance between the mounting feet is reduced by 30 mm.
The assembly with modular terminals gives consideration to a distance of 10 mm from the end of each mounting rail.
Order recommendations:
TS 35 mounting rail (screw terminal) WDU 2.5 1020000000 / (tension clamp terminal) ZDU 2.5 1608510000 / (tension clamp terminal) PDU 2.5 1896110000
TS 32 mounting rail (screw terminal) SAK 2.5 0279660000
TS 15 mounting rail (screw terminal) AKZ 2.5 0697160000

### Number of cable entries

| Number of cable entries | A / B | C / D |
|---|---|---|
| M12 | 33 | 38 |
| M16 | 22 | 26 |
| M20 | 14 | 17 |
| M25 | 12 | 14 |
| M32 | 6 | 7 |
| M40 | 5 | 6 |
| M50 | 2 | 3 |
| M63 | 2 | 2 |
| M75 | 1 | 2 |

**Note** Our IP 68 brass cable glands are used as the reference for these guideline values.

### Dimensions of mounting plate

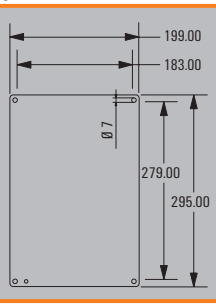

## Klippon® TB FS 403015

**Depth** 150 mm

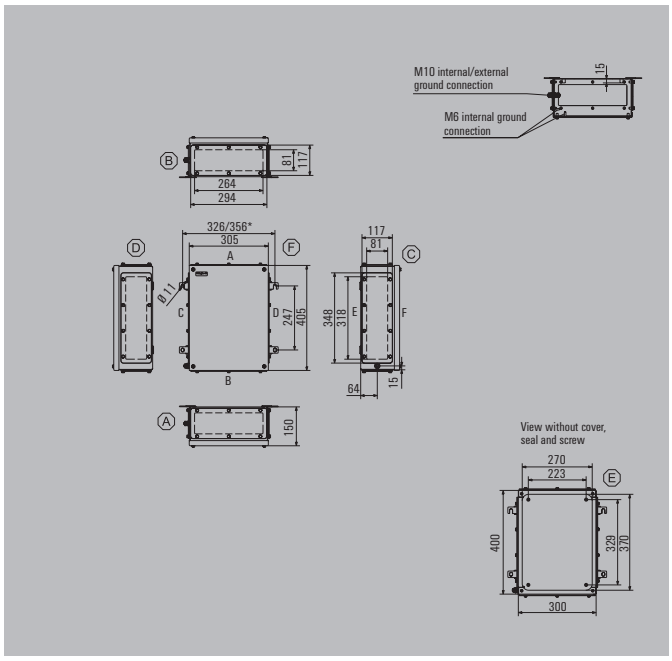


| | |
|---|---|
| Height/Width/Depth | 400 / 300 / 150 mm |

## Ordering data

| Stainless steel 1.4404 316L, electropolished | Order No. |
|---|---|
| 1 gland plate - bottom side (B) | 1196010000 |
| 2 gland plates - top and bottom sides (A & B) | 1196020000 |
| 3 gland plates - bottom, left and right sides (B, C & D) | 1196030000 |
| 4 gland plates - top, bottom, left and right sides (A, B, C & D) | 1196040000 |

**Note** Painted sheet steel enclosure available on request. The colours of painted enclosures may vary under certain circumstances.

## Accessories

| Mounting plates and fastening screws | Order No. |
|---|---|
| Steel sheet, zinc plated | 1193980000 |
| Stainless steel 1.4301 | 1193850000 |
| With hole pattern, natural stainless steel 1.4301 | 1257690000 |
| Fastening screws for mounting plates | 0642600000 |
| Fastening screws for terminal rails | 1274150000 |
| **Stainless steel spacer M6 x 8, Set of 4** | |
| 10 mm length | 0935110000 |
| 15 mm length | 0935120000 |
| 20 mm length | 0935130000 |
| 30 mm length | 0935140000 |
| **Gland plates and screws - 6 mm** | |
| Top and bottom sides (A & B), electropolished stainless steel 1.4404 | 1256430000 |
| Left and right sides (C & D), electropolished stainless steel 1.4404 | 1256440000 |
| Mounting screw, stainless steel 1.4404 | 1253230000 |
| **Label holder** | |
| 70 x 70 angled stainless steel 1.4301 | 1279320000 |
| 130x50 stainless steel 1.4301 | 1283450000 |
| 100x25 stainless steel 1.4301 | 1257640000 |
| **Document holder** | |
| For DIN A6 size documents | 1252780000 |
| For DIN A5 size documents | 1252750000 |
| For DIN A4 size documents | |
| **Set of fixings** | |
| For label holders, rain hoods and document holders (rivet) | 1252190000 |
| For plastic (Trafolyte), identification plate (screw) | 1285200000 |
| **Earthing stud** | |
| Stainless steel 1.4404 | 1192690000 |

**Note**

## Max. number of terminals (industry)

| Max. number of terminals (industry) | vertical | horizontal |
|---|---|---|
| 2.5 mm² | 2x62 | 3x42 |
| 4 mm² | 2x52 | 3x35 |
| 6 mm² | 1x39 | 2x26 |
| 10 mm² | 1x32 | 2x21 |
| 16 mm² | 1x26 | 2x18 |
| 35 mm² | 1x20 | 1x13 |

**Note** *For the enclosure versions with no, one or two gland plates, the horizontal distance between the mounting feet is reduced by 30 mm.
The assembly with modular terminals gives consideration to a distance of 10 mm from the end of each mounting rail.
Order recommendations:
TS 35 mounting rail (screw terminal) WDU 2.5 1020000000 / (tension clamp terminal) ZDU 2.5 1608510000 / (tension clamp terminal) PDU 2.5 1896110000
TS 32 mounting rail (screw terminal) SAK 2.5 0279660000
TS 15 mounting rail (screw terminal) AKZ 2.5 0697160000

## Number of cable entries

| Number of cable entries | A / B | C / D |
|---|---|---|
| M12 | 23 | 29 |
| M16 | 13 | 16 |
| M20 | 11 | 13 |
| M25 | 5 | 6 |
| M32 | 4 | 5 |
| M40 | 3 | 4 |
| M50 | 3 | 3 |
| M63 | 0 | 0 |
| M75 | 0 | 0 |

**Note** Our IP 68 brass cable glands are used as the reference for these guideline values.

## Dimensions of mounting plate

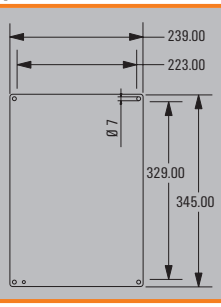

## Klippon® TB FS 403020

**Depth** 200 mm

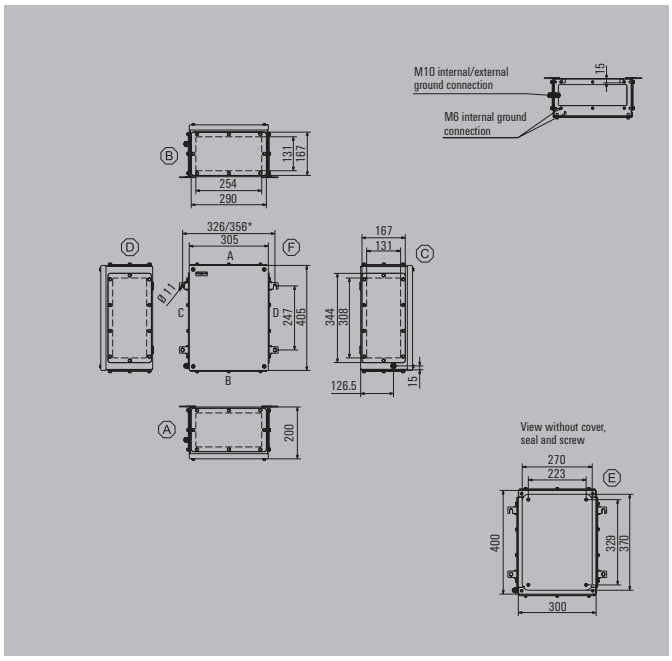


| | |
|---|---|
| Height/Width/Depth | 400 / 300 / 200 mm |

## Ordering data

| Stainless steel 1.4404 316L, electropolished | Order No. |
|---|---|
| 1 gland plate - bottom side (B) | 1196060000 |
| 2 gland plates - top and bottom sides (A & B) | 1196070000 |
| 3 gland plates - bottom, left and right sides (B, C & D) | 1196080000 |
| 4 gland plates - top, bottom, left and right sides (A, B, C & D) | 1196090000 |

**Note** Painted sheet steel enclosure available on request. The colours of painted enclosures may vary under certain circumstances.

## Accessories

| Mounting plates and fastening screws | Order No. |
|---|---|
| Steel sheet, zinc plated | 1193980000 |
| Stainless steel 1.4301 | 1193850000 |
| With hole pattern, natural stainless steel 1.4301 | 1257690000 |
| Fastening screws for mounting plates | 0642600000 |
| Fastening screws for terminal rails | 1274150000 |
| **Stainless steel spacer M6 x 8, Set of 4** | |
| 10 mm length | 0935110000 |
| 15 mm length | 0935120000 |
| 20 mm length | 0935130000 |
| 30 mm length | 0935140000 |
| **Gland plates and screws - 6 mm** | |
| Top and bottom sides (A & B), electropolished stainless steel 1.4404 | 1256450000 |
| Left and right sides (C & D), electropolished stainless steel 1.4404 | 1256470000 |
| Mounting screw, stainless steel 1.4404 | 1253230000 |
| **Label holder** | |
| 70 x 70 angled stainless steel 1.4301 | 1279320000 |
| 130x50 stainless steel 1.4301 | 1283450000 |
| 100x25 stainless steel 1.4301 | 1257640000 |
| **Document holder** | |
| For DIN A6 size documents | 1252780000 |
| For DIN A5 size documents | 1252750000 |
| For DIN A4 size documents | |
| **Set of fixings** | |
| For label holders, rain hoods and document holders (rivet) | 1252190000 |
| For plastic (Trafolyte), identification plate (screw) | 1285200000 |
| **Earthing stud** | |
| Stainless steel 1.4404 | 1192690000 |

**Note**

## Max. number of terminals (industry)

| Max. number of terminals (industry) | vertical | horizontal |
|---|---|---|
| 2.5 mm² | 2x62 | 3x42 |
| 4 mm² | 2x52 | 3x35 |
| 6 mm² | 1x39 | 2x26 |
| 10 mm² | 1x32 | 2x21 |
| 16 mm² | 1x26 | 2x18 |
| 35 mm² | 1x20 | 1x13 |

**Note** *For the enclosure versions with no, one or two gland plates, the horizontal distance between the mounting feet is reduced by 30 mm.
The assembly with modular terminals gives consideration to a distance of 10 mm from the end of each mounting rail.
Order recommendations:
TS 35 mounting rail (screw terminal) WDU 2.5 1020000000 / (tension clamp terminal) ZDU 2.5 1608510000 / (tension clamp terminal) PDU 2.5 1896110000
TS 32 mounting rail (screw terminal) SAK 2.5 0279660000
TS 15 mounting rail (screw terminal) AKZ 2.5 0697160000

## Number of cable entries

| Number of cable entries | A / B | C / D |
|---|---|---|
| M12 | 38 | 48 |
| M16 | 26 | 32 |
| M20 | 17 | 20 |
| M25 | 14 | 17 |
| M32 | 7 | 9 |
| M40 | 6 | 7 |
| M50 | 3 | 3 |
| M63 | 2 | 3 |
| M75 | 2 | 2 |

**Note** Our IP 68 brass cable glands are used as the reference for these guideline values.

## Dimensions of mounting plate

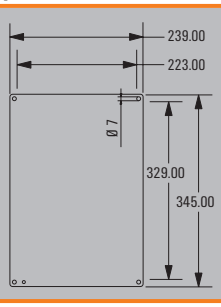

## Klippon® TB FS 453815

**Depth** 150 mm

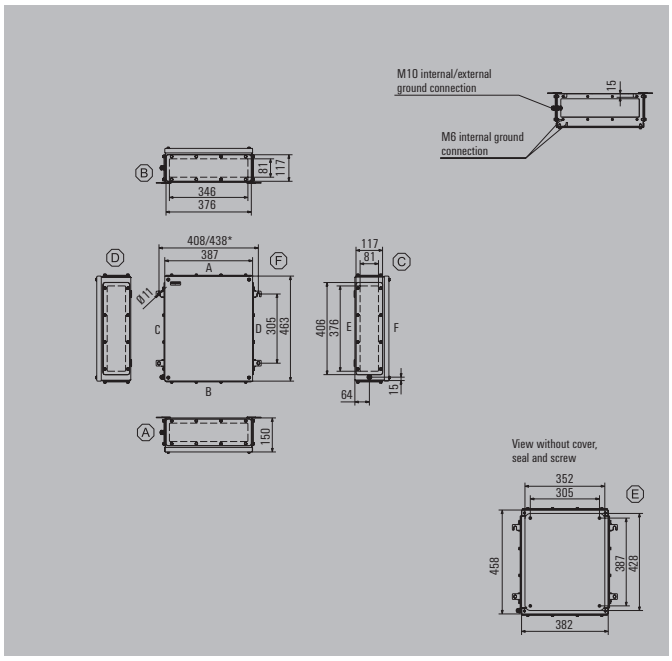


| | |
|---|---|
| Height/Width/Depth | 458 / 382 / 150 mm |

## Ordering data

| Stainless steel 1.4404 316L, electropolished | Order No. |
|---|---|
| 1 gland plate - bottom side (B) | 1196110000 |
| 2 gland plates - top and bottom sides (A & B) | 1196120000 |
| 3 gland plates - bottom, left and right sides (B, C & D) | 1196130000 |
| 4 gland plates - top, bottom, left and right sides (A, B, C & D) | 1196140000 |
| **Note** | Painted sheet steel enclosure available on request. The colours of painted enclosures may vary under certain circumstances. |

## Accessories

| Mounting plates and fastening screws | Order No. |
|---|---|
| Steel sheet, zinc plated | 1193990000 |
| Stainless steel 1.4301 | 1193860000 |
| With hole pattern, natural stainless steel 1.4301 | 1257700000 |
| Fastening screws for mounting plates | 0642600000 |
| Fastening screws for terminal rails | 1274150000 |
| **Stainless steel spacer M6 x 8, Set of 4** | |
| 10 mm length | 0935110000 |
| 15 mm length | 0935120000 |
| 20 mm length | 0935130000 |
| 30 mm length | 0935140000 |
| **Gland plates and screws - 6 mm** | |
| Top and bottom sides (A & B), electropolished stainless steel 1.4404 | 1256480000 |
| Left and right sides (C & D), electropolished stainless steel 1.4404 | 1256490000 |
| Mounting screw, stainless steel 1.4404 | 1253230000 |
| **Label holder** | |
| 70 x 70 angled stainless steel 1.4301 | 1279320000 |
| 130x50 stainless steel 1.4301 | 1283450000 |
| 100x25 stainless steel 1.4301 | 1257640000 |
| **Document holder** | |
| For DIN A6 size documents | 1252780000 |
| For DIN A5 size documents | 1252750000 |
| For DIN A4 size documents | 1252730000 |
| **Set of fixings** | |
| For label holders, rain hoods and document holders (rivet) | 1252190000 |
| For plastic (Trafolyte), identification plate (screw) | 1285200000 |
| **Earthing stud** | |
| Stainless steel 1.4404 | 1192690000 |

**Note**

## Max. number of terminals (industry)

| Max. number of terminals (industry) | vertical | horizontal |
|---|---|---|
| 2.5 mm² | 3x73 | 4x58 |
| 4 mm² | 2x62 | 3x48 |
| 6 mm² | 2x46 | 3x36 |
| 10 mm² | 2x37 | 2x29 |
| 16 mm² | 2x31 | 2x24 |
| 35 mm² | 1x23 | 1x18 |

**Note**

*For the enclosure versions with no, one or two gland plates, the horizontal distance between the mounting feet is reduced by 30 mm.
The assembly with modular terminals gives consideration to a distance of 10 mm from the end of each mounting rail.
Order recommendations:
TS 35 mounting rail (screw terminal) WDU 2.5 1020000000 / (tension clamp terminal) ZDU 2.5 1608510000 / (tension clamp terminal) PDU 2.5 1896110000
TS 32 mounting rail (screw terminal) SAK 2.5 0279660000
TS 15 mounting rail (screw terminal) AKZ 2.5 0697160000

## Number of cable entries

| Number of cable entries | A / B | C / D |
|---|---|---|
| M12 | 30 | 33 |
| M16 | 17 | 19 |
| M20 | 15 | 16 |
| M25 | 6 | 7 |
| M32 | 5 | 6 |
| M40 | 4 | 5 |
| M50 | 4 | 4 |
| M63 | 0 | 0 |
| M75 | 0 | 0 |

**Note** Our IP 68 brass cable glands are used as the reference for these guideline values.

## Dimensions of mounting plate

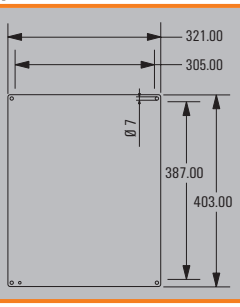

## Klippon® TB FS 453820

**Depth** 200 mm

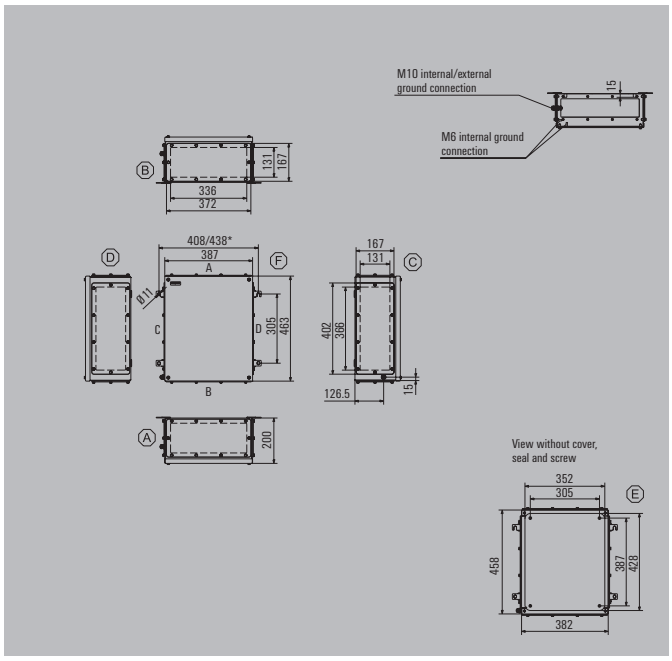


| | |
|---|---|
| Height/Width/Depth | 458 / 382 / 200 mm |

## Ordering data

| Stainless steel 1.4404 316L, electropolished | Order No. |
|---|---|
| 1 gland plate - bottom side (B) | 1196160000 |
| 2 gland plates - top and bottom sides (A & B) | 1196170000 |
| 3 gland plates - bottom, left and right sides (B, C & D) | 1196180000 |
| 4 gland plates - top, bottom, left and right sides (A, B, C & D) | 1196190000 |

**Note** Painted sheet steel enclosure available on request. The colours of painted enclosures may vary under certain circumstances.

## Accessories

| Mounting plates and fastening screws | Order No. |
|---|---|
| Steel sheet, zinc plated | 1193990000 |
| Stainless steel 1.4301 | 1193860000 |
| With hole pattern, natural stainless steel 1.4301 | 1257700000 |
| Fastening screws for mounting plates | 0642600000 |
| Fastening screws for terminal rails | 1274150000 |
| **Stainless steel spacer M6 x 8, Set of 4** | |
| 10 mm length | 0935110000 |
| 15 mm length | 0935120000 |
| 20 mm length | 0935130000 |
| 30 mm length | 0935140000 |
| **Gland plates and screws - 6 mm** | |
| Top and bottom sides (A & B), electropolished stainless steel 1.4404 | 1256510000 |
| Left and right sides (C & D), electropolished stainless steel 1.4404 | 1256520000 |
| Mounting screw, stainless steel 1.4404 | 1253230000 |
| **Label holder** | |
| 70 x 70 angled stainless steel 1.4301 | 1279320000 |
| 130x50 stainless steel 1.4301 | 1283450000 |
| 100x25 stainless steel 1.4301 | 1257640000 |
| **Document holder** | |
| For DIN A6 size documents | 1252780000 |
| For DIN A5 size documents | 1252750000 |
| For DIN A4 size documents | 1252730000 |
| **Set of fixings** | |
| For label holders, rain hoods and document holders (rivet) | 1252190000 |
| For plastic (Trafolyte), identification plate (screw) | 1285200000 |
| **Earthing stud** | |
| Stainless steel 1.4404 | 1192690000 |

**Note**

## Max. number of terminals (industry)

| Max. number of terminals (industry) | vertical | horizontal |
|---|---|---|
| 2.5 mm² | 3x73 | 4x58 |
| 4 mm² | 2x62 | 3x48 |
| 6 mm² | 2x46 | 3x36 |
| 10 mm² | 2x37 | 2x29 |
| 16 mm² | 2x31 | 2x24 |
| 35 mm² | 1x23 | 1x18 |

**Note**
*For the enclosure versions with no, one or two gland plates, the horizontal distance between the mounting feet is reduced by 30 mm.
The assembly with modular terminals gives consideration to a distance of 10 mm from the end of each mounting rail.
Order recommendations:
TS 35 mounting rail (screw terminal) WDU 2.5 1020000000 / (tension clamp terminal) ZDU 2.5 1608510000 / (tension clamp terminal) PDU 2.5 1896110000
TS 32 mounting rail (screw terminal) SAK 2.5 0279660000
TS 15 mounting rail (screw terminal) AKZ 2.5 0697160000

## Number of cable entries

| Number of cable entries | A / B | C / D |
|---|---|---|
| M12 | 50 | 55 |
| M16 | 34 | 38 |
| M20 | 23 | 24 |
| M25 | 18 | 21 |
| M32 | 10 | 11 |
| M40 | 8 | 9 |
| M50 | 4 | 4 |
| M63 | 3 | 3 |
| M75 | 2 | 3 |

**Note** Our IP 68 brass cable glands are used as the reference for these guideline values.

## Dimensions of mounting plate

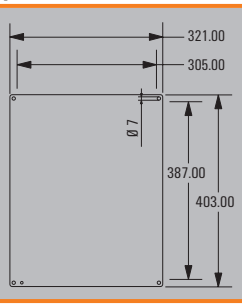

## Klippon® TB FS 484815

**Depth** 150 mm

| Height/Width/Depth | 480 / 480 / 150 mm |
|---|---|

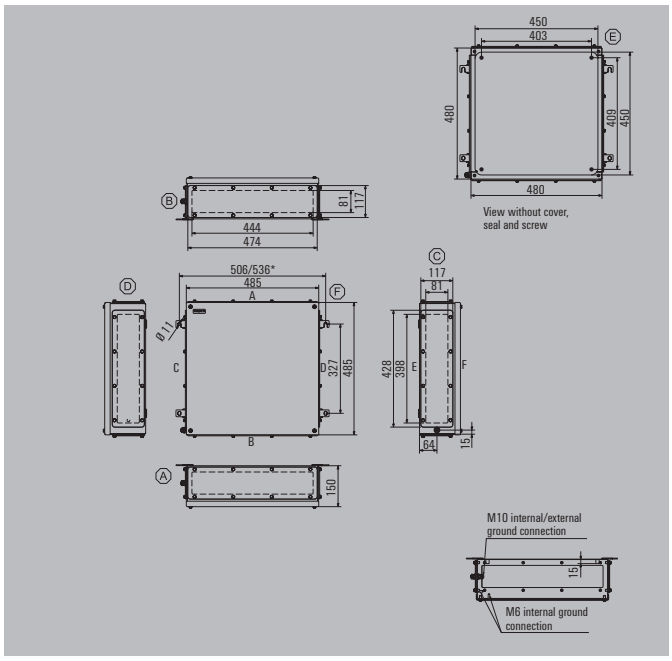


### Ordering data

| Stainless steel 1.4404 316L, electropolished | Order No. |
|---|---|
| 1 gland plate - bottom side (B) | 1196210000 |
| 2 gland plates - top and bottom sides (A & B) | 1196220000 |
| 3 gland plates - bottom, left and right sides (B, C & D) | 1196230000 |
| 4 gland plates - top, bottom, left and right sides (A, B, C & D) | 1196240000 |
| **Note** | Painted sheet steel enclosure available on request. The colours of painted enclosures may vary under certain circumstances. |

### Accessories

| Mounting plates and fastening screws | Order No. |
|---|---|
| Steel sheet, zinc plated | 1194000000 |
| Stainless steel 1.4301 | 1193870000 |
| With hole pattern, natural stainless steel 1.4301 | 1257710000 |
| Fastening screws for mounting plates | 0642600000 |
| Fastening screws for terminal rails | 1274150000 |
| **Stainless steel spacer M6 x 8, Set of 4** | |
| 10 mm length | 0935110000 |
| 15 mm length | 0935120000 |
| 20 mm length | 0935130000 |
| 30 mm length | 0935140000 |
| **Gland plates and screws - 6 mm** | |
| Top and bottom sides (A & B), electropolished stainless steel 1.4404 | 1256530000 |
| Left and right sides (C & D), electropolished stainless steel 1.4404 | 1256540000 |
| Mounting screw, stainless steel 1.4404 | 1253230000 |
| **Label holder** | |
| 70 x 70 angled stainless steel 1.4301 | 1279320000 |
| 130x50 stainless steel 1.4301 | 1283450000 |
| 100x25 stainless steel 1.4301 | 1257640000 |
| **Document holder** | |
| For DIN A6 size documents | 1252780000 |
| For DIN A5 size documents | 1252750000 |
| For DIN A4 size documents | 1252730000 |
| **Set of fixings** | |
| For label holders, rain hoods and document holders (rivet) | 1252190000 |
| For plastic (Trafolyte), identification plate (screw) | 1285200000 |
| **Earthing stud** | |
| Stainless steel 1.4404 | 1192690000 |

**Note**

### Max. number of terminals (industry)

| Max. number of terminals (industry) | vertical | horizontal |
|---|---|---|
| 2.5 mm² | 4x78 | 4x77 |
| 4 mm² | 3x65 | 3x64 |
| 6 mm² | 3x49 | 3x48 |
| 10 mm² | 2x39 | 3x39 |
| 16 mm² | 2x33 | 2x32 |
| 35 mm² | 1x25 | 2x24 |

**Note**

*For the enclosure versions with no, one or two gland plates, the horizontal distance between the mounting feet is reduced by 30 mm.
The assembly with modular terminals gives consideration to a distance of 10 mm from the end of each mounting rail.
Order recommendations:
TS 35 mounting rail (screw terminal) WDU 2.5 1020000000 / (tension clamp terminal) ZDU 2.5 1608510000 / (tension clamp terminal) PDU 2.5 1896110000
TS 32 mounting rail (screw terminal) SAK 2.5 0279660000
TS 15 mounting rail (screw terminal) AKZ 2.5 0697160000

### Number of cable entries

| Number of cable entries | A / B | C / D |
|---|---|---|
| M12 | 39 | 36 |
| M16 | 22 | 20 |
| M20 | 19 | 17 |
| M25 | 8 | 7 |
| M32 | 7 | 6 |
| M40 | 6 | 5 |
| M50 | 5 | 4 |
| M63 | 0 | 0 |
| M75 | 0 | 0 |

**Note** Our IP 68 brass cable glands are used as the reference for these guideline values.

### Dimensions of mounting plate

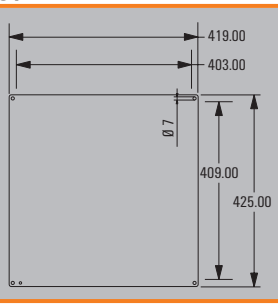

## Klippon® TB FS 484820

**Depth** 200 mm

| Height/Width/Depth | 480 / 480 / 200 mm |
|---|---|

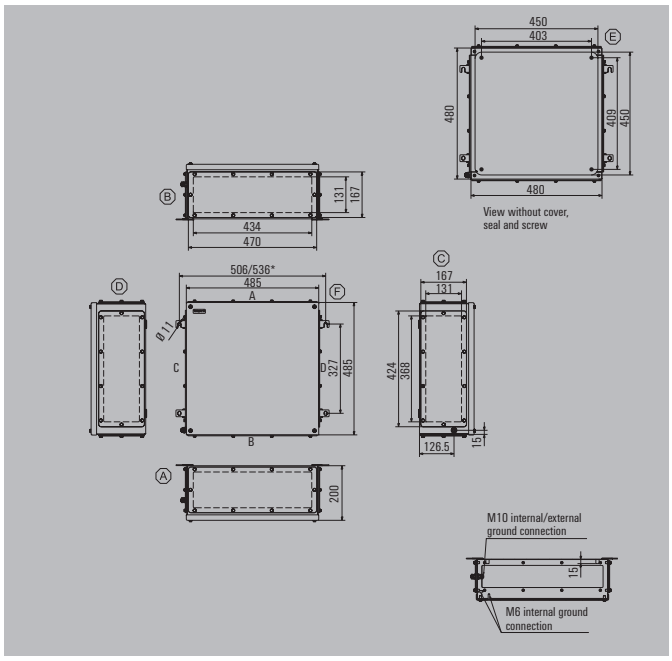


### Ordering data

| Stainless steel 1.4404 316L, electropolished | Order No. |
|---|---|
| 1 gland plate - bottom side (B) | 1196260000 |
| 2 gland plates - top and bottom sides (A & B) | 1196270000 |
| 3 gland plates - bottom, left and right sides (B, C & D) | 1196280000 |
| 4 gland plates - top, bottom, left and right sides (A, B, C & D) | 1196290000 |
| **Note** | Painted sheet steel enclosure available on request. The colours of painted enclosures may vary under certain circumstances. |

### Accessories

| Mounting plates and fastening screws | Order No. |
|---|---|
| Steel sheet, zinc plated | 1194000000 |
| Stainless steel 1.4301 | 1193870000 |
| With hole pattern, natural stainless steel 1.4301 | 1257710000 |
| Fastening screws for mounting plates | 0642600000 |
| Fastening screws for terminal rails | 1274150000 |
| **Stainless steel spacer M6 x 8, Set of 4** | |
| 10 mm length | 0935110000 |
| 15 mm length | 0935120000 |
| 20 mm length | 0935130000 |
| 30 mm length | 0935140000 |
| **Gland plates and screws - 6 mm** | |
| Top and bottom sides (A & B), electropolished stainless steel 1.4404 | 1256550000 |
| Left and right sides (C & D), electropolished stainless steel 1.4404 | 1256560000 |
| Mounting screw, stainless steel 1.4404 | 1253230000 |
| **Label holder** | |
| 70 x 70 angled stainless steel 1.4301 | 1279320000 |
| 130x50 stainless steel 1.4301 | 1283450000 |
| 100x25 stainless steel 1.4301 | 1257640000 |
| **Document holder** | |
| For DIN A6 size documents | 1252780000 |
| For DIN A5 size documents | 1252750000 |
| For DIN A4 size documents | 1252730000 |
| **Set of fixings** | |
| For label holders, rain hoods and document holders (rivet) | 1252190000 |
| For plastic (Trafolyte), identification plate (screw) | 1285200000 |
| **Earthing stud** | |
| Stainless steel 1.4404 | 1192690000 |

**Note**

### Max. number of terminals (industry)

| Max. number of terminals (industry) | vertical | horizontal |
|---|---|---|
| 2.5 mm² | 4x78 | 4x77 |
| 4 mm² | 3x65 | 3x64 |
| 6 mm² | 3x49 | 3x48 |
| 10 mm² | 2x39 | 3x39 |
| 16 mm² | 2x33 | 2x32 |
| 35 mm² | 1x25 | 2x24 |

**Note**

*For the enclosure versions with no, one or two gland plates, the horizontal distance between the mounting feet is reduced by 30 mm.
The assembly with modular terminals gives consideration to a distance of 10 mm from the end of each mounting rail.
Order recommendations:
TS 35 mounting rail (screw terminal) WDU 2.5 1020000000 / (tension clamp terminal) ZDU 2.5 1608510000 / (tension clamp terminal) PDU 2.5 1896110000
TS 32 mounting rail (screw terminal) SAK 2.5 0279660000
TS 15 mounting rail (screw terminal) AKZ 2.5 0697160000

### Number of cable entries

| Number of cable entries | A / B | C / D |
|---|---|---|
| M12 | 65 | 60 |
| M16 | 44 | 40 |
| M20 | 29 | 26 |
| M25 | 24 | 21 |
| M32 | 13 | 12 |
| M40 | 11 | 10 |
| M50 | 5 | 4 |
| M63 | 4 | 4 |
| M75 | 3 | 3 |

**Note** Our IP 68 brass cable glands are used as the reference for these guideline values.

### Dimensions of mounting plate

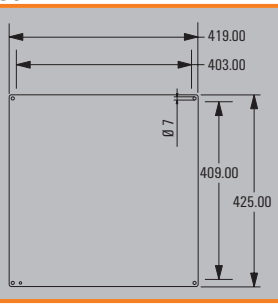

## Klippon® TB FS 553515

**Depth** 150 mm

| Height/Width/Depth | 550 / 350 / 150 mm |
|---|---|

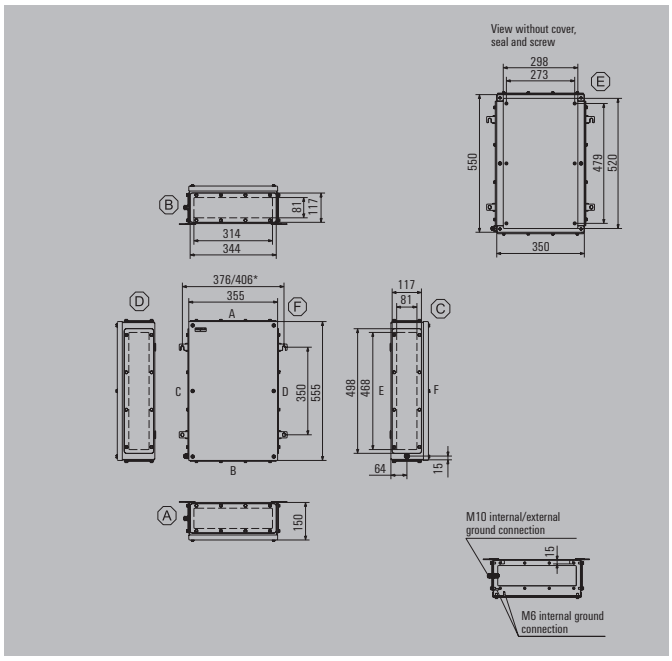


### Ordering data

| Stainless steel 1.4404 316L, electropolished | Order No. |
|---|---|
| 1 gland plate - bottom side (B) | 1196310000 |
| 2 gland plates - top and bottom sides (A & B) | 1196320000 |
| 3 gland plates - bottom, left and right sides (B, C & D) | 1196330000 |
| 4 gland plates - top, bottom, left and right sides (A, B, C & D) | 1196340000 |
| **Note** | Painted sheet steel enclosure available on request. The colours of painted enclosures may vary under certain circumstances. |

### Accessories

| Mounting plates and fastening screws | Order No. |
|---|---|
| Steel sheet, zinc plated | 1194010000 |
| Stainless steel 1.4301 | 1193880000 |
| With hole pattern, natural stainless steel 1.4301 | 1257720000 |
| Fastening screws for mounting plates | 0642600000 |
| Fastening screws for terminal rails | 1274150000 |
| **Stainless steel spacer M6 x 8, Set of 4** | |
| 10 mm length | 0935110000 |
| 15 mm length | 0935120000 |
| 20 mm length | 0935130000 |
| 30 mm length | 0935140000 |
| **Gland plates and screws - 6 mm** | |
| Top and bottom sides (A & B), electropolished stainless steel 1.4404 | 1256570000 |
| Left and right sides (C & D), electropolished stainless steel 1.4404 | 1256580000 |
| Mounting screw, stainless steel 1.4404 | 1253230000 |
| **Label holder** | |
| 70 x 70 angled stainless steel 1.4301 | 1279320000 |
| 130x50 stainless steel 1.4301 | 1283450000 |
| 100x25 stainless steel 1.4301 | 1257640000 |
| **Document holder** | |
| For DIN A6 size documents | 1252780000 |
| For DIN A5 size documents | 1252750000 |
| For DIN A4 size documents | 1252730000 |
| **Set of fixings** | |
| For label holders, rain hoods and document holders (rivet) | 1252190000 |
| For plastic (Trafolyte), identification plate (screw) | 1285200000 |
| **Earthing stud** | |
| Stainless steel 1.4404 | 1192690000 |

**Note**

### Max. number of terminals (industry)

| Max. number of terminals (industry) | vertical | horizontal |
|---|---|---|
| 2.5 mm² | 2x91 | 4x52 |
| 4 mm² | 2x76 | 4x43 |
| 6 mm² | 2x58 | 4x32 |
| 10 mm² | 2x46 | 3x26 |
| 16 mm² | 1x39 | 3x22 |
| 35 mm² | 1x29 | 2x16 |

**Note**

*For the enclosure versions with no, one or two gland plates, the horizontal distance between the mounting feet is reduced by 30 mm.
The assembly with modular terminals gives consideration to a distance of 10 mm from the end of each mounting rail.
Order recommendations:
TS 35 mounting rail (screw terminal) WDU 2.5 1020000000 / (tension clamp terminal) ZDU 2.5 1608510000 / (tension clamp terminal) PDU 2.5 1896110000
TS 32 mounting rail (screw terminal) SAK 2.5 0279660000
TS 15 mounting rail (screw terminal) AKZ 2.5 0697160000

### Number of cable entries

| Number of cable entries | A / B | C / D |
|---|---|---|
| M12 | 27 | 42 |
| M16 | 15 | 24 |
| M20 | 13 | 20 |
| M25 | 6 | 9 |
| M32 | 5 | 7 |
| M40 | 4 | 6 |
| M50 | 3 | 5 |
| M63 | 0 | 0 |
| M75 | 0 | 0 |

**Note** Our IP 68 brass cable glands are used as the reference for these guideline values.

### Dimensions of mounting plate

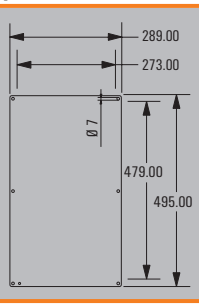

## Klippon® TB FS 553520

**Depth** 200 mm

| Height/Width/Depth | 550 / 350 / 200 mm |
|---|---|

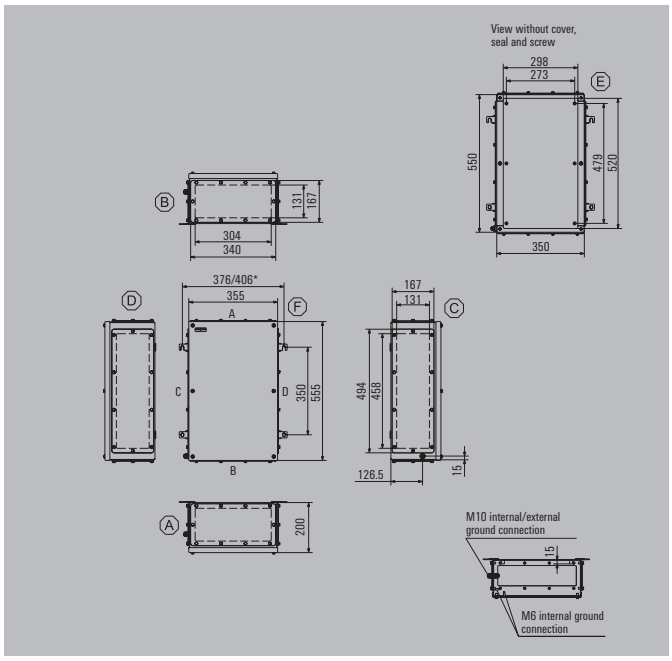


### Ordering data

| Stainless steel 1.4404 316L, electropolished | Order No. |
|---|---|
| 1 gland plate - bottom side (B) | 1196360000 |
| 2 gland plates - top and bottom sides (A & B) | 1196370000 |
| 3 gland plates - bottom, left and right sides (B, C & D) | 1196380000 |
| 4 gland plates - top, bottom, left and right sides (A, B, C & D) | 1196390000 |
| **Note** | Painted sheet steel enclosure available on request. The colours of painted enclosures may vary under certain circumstances. |

### Accessories

| Mounting plates and fastening screws | Order No. |
|---|---|
| Steel sheet, zinc plated | 1194010000 |
| Stainless steel 1.4301 | 1193880000 |
| With hole pattern, natural stainless steel 1.4301 | 1257720000 |
| Fastening screws for mounting plates | 0642600000 |
| Fastening screws for terminal rails | 1274150000 |
| **Stainless steel spacer M6 x 8, Set of 4** | |
| 10 mm length | 0935110000 |
| 15 mm length | 0935120000 |
| 20 mm length | 0935130000 |
| 30 mm length | 0935140000 |
| **Gland plates and screws - 6 mm** | |
| Top and bottom sides (A & B), electropolished stainless steel 1.4404 | 1256590000 |
| Left and right sides (C & D), electropolished stainless steel 1.4404 | 1256610000 |
| Mounting screw, stainless steel 1.4404 | 1253230000 |
| **Label holder** | |
| 70 x 70 angled stainless steel 1.4301 | 1279320000 |
| 130x50 stainless steel 1.4301 | 1283450000 |
| 100x25 stainless steel 1.4301 | 1257640000 |
| **Document holder** | |
| For DIN A6 size documents | 1252780000 |
| For DIN A5 size documents | 1252750000 |
| For DIN A4 size documents | 1252730000 |
| **Set of fixings** | |
| For label holders, rain hoods and document holders (rivet) | 1252190000 |
| For plastic (Trafolyte), identification plate (screw) | 1285200000 |
| **Earthing stud** | |
| Stainless steel 1.4404 | 1192690000 |

**Note**

### Max. number of terminals (industry)

| Max. number of terminals (industry) | vertical | horizontal |
|---|---|---|
| 2.5 mm² | 2x91 | 4x52 |
| 4 mm² | 2x76 | 4x43 |
| 6 mm² | 2x58 | 4x32 |
| 10 mm² | 2x46 | 3x26 |
| 16 mm² | 1x39 | 3x22 |
| 35 mm² | 1x29 | 2x16 |

**Note**

*For the enclosure versions with no, one or two gland plates, the horizontal distance between the mounting feet is reduced by 30 mm.
The assembly with modular terminals gives consideration to a distance of 10 mm from the end of each mounting rail.
Order recommendations:
TS 35 mounting rail (screw terminal) WDU 2.5 1020000000 / (tension clamp terminal) ZDU 2.5 1608510000 / (tension clamp terminal) PDU 2.5 1896110000
TS 32 mounting rail (screw terminal) SAK 2.5 0279660000
TS 15 mounting rail (screw terminal) AKZ 2.5 0697160000

### Number of cable entries

| Number of cable entries | A / B | C / D |
|---|---|---|
| M12 | 45 | 70 |
| M16 | 30 | 48 |
| M20 | 20 | 30 |
| M25 | 17 | 26 |
| M32 | 9 | 14 |
| M40 | 7 | 12 |
| M50 | 3 | 5 |
| M63 | 3 | 4 |
| M75 | 2 | 3 |

**Note** Our IP 68 brass cable glands are used as the reference for these guideline values.

### Dimensions of mounting plate

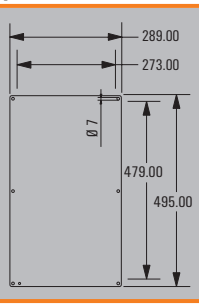

## Klippon® TB FS 624515

**Depth** 150 mm

| Height/Width/Depth | 620 / 450 / 150 mm |
|---|---|

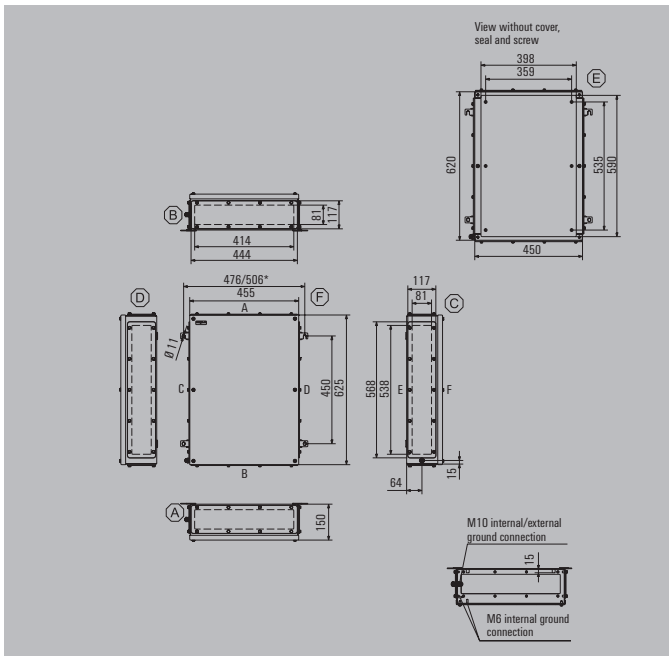


## Ordering data

| Stainless steel 1.4404 316L, electropolished | Order No. |
|---|---|
| 1 gland plate - bottom side (B) | 1196410000 |
| 2 gland plates - top and bottom sides (A & B) | 1196420000 |
| 3 gland plates - bottom, left and right sides (B, C & D) | 1196430000 |
| 4 gland plates - top, bottom, left and right sides (A, B, C & D) | 1196440000 |
| **Note** | Painted sheet steel enclosure available on request. The colours of painted enclosures may vary under certain circumstances. |

## Accessories

| Mounting plates and fastening screws | Order No. |
|---|---|
| Steel sheet, zinc plated | 1194020000 |
| Stainless steel 1.4301 | 1193890000 |
| With hole pattern, natural stainless steel 1.4301 | 1257740000 |
| Fastening screws for mounting plates | 0642600000 |
| Fastening screws for terminal rails | 1274150000 |
| **Stainless steel spacer M6 x 8, Set of 4** | |
| 10 mm length | 0935110000 |
| 15 mm length | 0935120000 |
| 20 mm length | 0935130000 |
| 30 mm length | 0935140000 |
| **Gland plates and screws - 6 mm** | |
| Top and bottom sides (A & B), electropolished stainless steel 1.4404 | 1256620000 |
| Left and right sides (C & D), electropolished stainless steel 1.4404 | 1256630000 |
| Mounting screw, stainless steel 1.4404 | 1253230000 |
| **Label holder** | |
| 70 x 70 angled stainless steel 1.4301 | 1279320000 |
| 130x50 stainless steel 1.4301 | 1283450000 |
| 100x25 stainless steel 1.4301 | 1257640000 |
| **Document holder** | |
| For DIN A6 size documents | 1252780000 |
| For DIN A5 size documents | 1252750000 |
| For DIN A4 size documents | 1252730000 |
| **Set of fixings** | |
| For label holders, rain hoods and document holders (rivet) | 1252190000 |
| For plastic (Trafolyte), identification plate (screw) | 1285200000 |
| **Earthing stud** | |
| Stainless steel 1.4404 | 1192690000 |

**Note**

## Max. number of terminals (industry)

| Max. number of terminals (industry) | vertical | horizontal |
|---|---|---|
| 2.5 mm² | 3x105 | 5x71 |
| 4 mm² | 3x88 | 5x59 |
| 6 mm² | 3x66 | 4x45 |
| 10 mm² | 2x53 | 4x36 |
| 16 mm² | 2x44 | 3x30 |
| 35 mm² | 1x33 | 2x22 |

**Note**

*For the enclosure versions with no, one or two gland plates, the horizontal distance between the mounting feet is reduced by 30 mm.
The assembly with modular terminals gives consideration to a distance of 10 mm from the end of each mounting rail.
Order recommendations:
TS 35 mounting rail (screw terminal) WDU 2.5 1020000000 / (tension clamp terminal) ZDU 2.5 1608510000 / (tension clamp terminal) PDU 2.5 1896110000
TS 32 mounting rail (screw terminal) SAK 2.5 0279660000
TS 15 mounting rail (screw terminal) AKZ 2.5 0697160000

## Number of cable entries

| Number of cable entries | A / B | C / D |
|---|---|---|
| M12 | 38 | 48 |
| M16 | 21 | 27 |
| M20 | 18 | 24 |
| M25 | 8 | 10 |
| M32 | 6 | 9 |
| M40 | 5 | 7 |
| M50 | 4 | 6 |
| M63 | 0 | 0 |
| M75 | 0 | 0 |

**Note** Our IP 68 brass cable glands are used as the reference for these guideline values.

## Dimensions of mounting plate

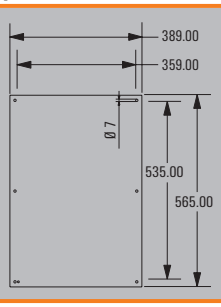

## Klippon® TB FS 624520

**Depth** 200 mm

| Height/Width/Depth | 620 / 450 / 200 mm |
|---|---|

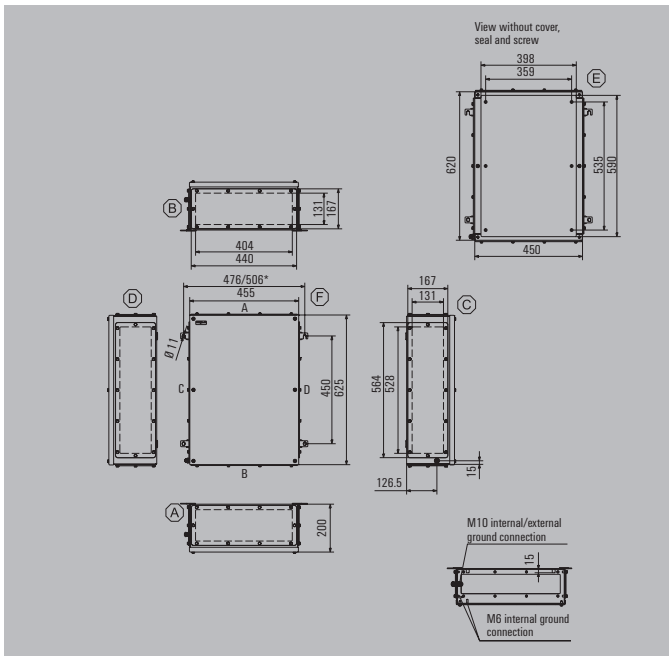


### Ordering data

| Stainless steel 1.4404 316L, electropolished | Order No. |
|---|---|
| 1 gland plate - bottom side (B) | 1196460000 |
| 2 gland plates - top and bottom sides (A & B) | 1196470000 |
| 3 gland plates - bottom, left and right sides (B, C & D) | 1196480000 |
| 4 gland plates - top, bottom, left and right sides (A, B, C & D) | 1196490000 |
| **Note** | Painted sheet steel enclosure available on request. The colours of painted enclosures may vary under certain circumstances. |

### Accessories

| Mounting plates and fastening screws | Order No. |
|---|---|
| Steel sheet, zinc plated | 1194020000 |
| Stainless steel 1.4301 | 1193890000 |
| With hole pattern, natural stainless steel 1.4301 | 1257740000 |
| Fastening screws for mounting plates | 0642600000 |
| Fastening screws for terminal rails | 1274150000 |
| **Stainless steel spacer M6 x 8, Set of 4** | |
| 10 mm length | 0935110000 |
| 15 mm length | 0935120000 |
| 20 mm length | 0935130000 |
| 30 mm length | 0935140000 |
| **Gland plates and screws - 6 mm** | |
| Top and bottom sides (A & B), electropolished stainless steel 1.4404 | 1256640000 |
| Left and right sides (C & D), electropolished stainless steel 1.4404 | 1256650000 |
| Mounting screw, stainless steel 1.4404 | 1253230000 |
| **Label holder** | |
| 70 x 70 angled stainless steel 1.4301 | 1279320000 |
| 130x50 stainless steel 1.4301 | 1283450000 |
| 100x25 stainless steel 1.4301 | 1257640000 |
| **Document holder** | |
| For DIN A6 size documents | 1252780000 |
| For DIN A5 size documents | 1252750000 |
| For DIN A4 size documents | 1252730000 |
| **Set of fixings** | |
| For label holders, rain hoods and document holders (rivet) | 1252190000 |
| For plastic (Trafolyte), identification plate (screw) | 1285200000 |
| **Earthing stud** | |
| Stainless steel 1.4404 | 1192690000 |

**Note**

### Max. number of terminals (industry)

| Max. number of terminals (industry) | vertical | horizontal |
|---|---|---|
| 2.5 mm² | 3x105 | 5x71 |
| 4 mm² | 3x88 | 5x59 |
| 6 mm² | 3x66 | 4x45 |
| 10 mm² | 2x53 | 4x36 |
| 16 mm² | 2x44 | 3x30 |
| 35 mm² | 1x33 | 2x22 |

**Note**

*For the enclosure versions with no, one or two gland plates, the horizontal distance between the mounting feet is reduced by 30 mm.
The assembly with modular terminals gives consideration to a distance of 10 mm from the end of each mounting rail.
Order recommendations:
TS 35 mounting rail (screw terminal) WDU 2.5 1020000000 / (tension clamp terminal) ZDU 2.5 1608510000 / (tension clamp terminal) PDU 2.5 1896110000
TS 32 mounting rail (screw terminal) SAK 2.5 0279660000
TS 15 mounting rail (screw terminal) AKZ 2.5 0697160000

### Number of cable entries

| Number of cable entries | A / B | C / D |
|---|---|---|
| M12 | 63 | 80 |
| M16 | 42 | 54 |
| M20 | 27 | 36 |
| M25 | 23 | 30 |
| M32 | 12 | 17 |
| M40 | 10 | 14 |
| M50 | 4 | 6 |
| M63 | 4 | 5 |
| M75 | 3 | 4 |

**Note** Our IP 68 brass cable glands are used as the reference for these guideline values.

### Dimensions of mounting plate

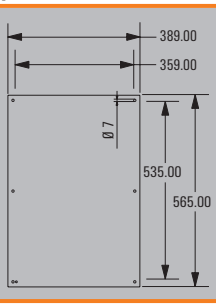

## Klippon® TB FS 765015

**Depth** 150 mm

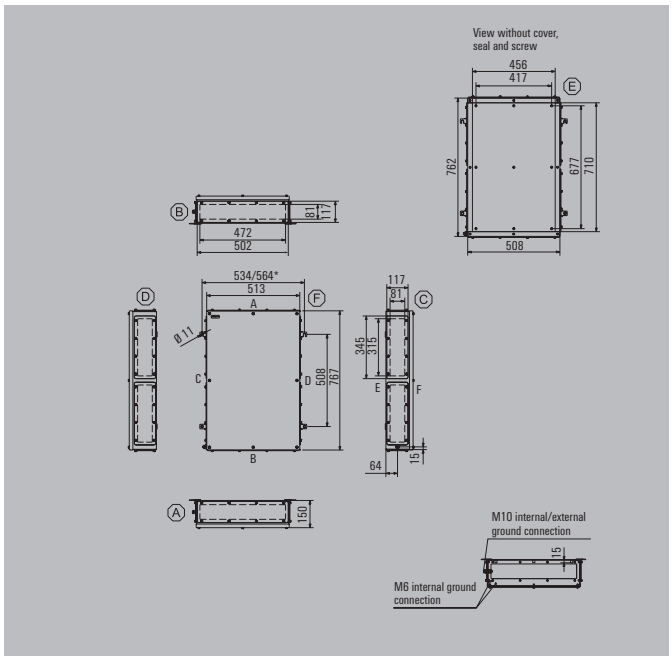


| Height/Width/Depth | 762 / 508 / 150 mm |
|---|---|

## Ordering data

| Stainless steel 1.4404 316L, electropolished | Order No. |
|---|---|
| 1 gland plate - bottom side (B) | 1196510000 |
| 2 gland plates - top and bottom sides (A & B) | 1196520000 |
| 3 gland plates - bottom, left and right sides (B, C & D) | 1196530000 |
| 4 gland plates - top, bottom, left and right sides (A, B, C & D) | 1196540000 |
| **Note** | Painted sheet steel enclosure available on request. The colours of painted enclosures may vary under certain circumstances. |

## Accessories

| Mounting plates and fastening screws | Order No. |
|---|---|
| Steel sheet, zinc plated | 1194030000 |
| Stainless steel 1.4301 | 1193900000 |
| With hole pattern, natural stainless steel 1.4301 | 1257750000 |
| Fastening screws for mounting plates | 0642600000 |
| Fastening screws for terminal rails | 1274150000 |
| **Stainless steel spacer M6 x 8, Set of 4** | |
| 10 mm length | 0935110000 |
| 15 mm length | 0935120000 |
| 20 mm length | 0935130000 |
| 30 mm length | 0935140000 |
| **Gland plates and screws - 6 mm** | |
| Top and bottom sides (A & B), electropolished stainless steel 1.4404 | 1256660000 |
| Left and right sides (C & D), electropolished stainless steel 1.4404 | 1256670000 |
| Mounting screw, stainless steel 1.4404 | 1253230000 |
| **Label holder** | |
| 70 x 70 angled stainless steel 1.4301 | 1279320000 |
| 130x50 stainless steel 1.4301 | 1283450000 |
| 100x25 stainless steel 1.4301 | 1257640000 |
| **Document holder** | |
| For DIN A6 size documents | 1252780000 |
| For DIN A5 size documents | 1252750000 |
| For DIN A4 size documents | 1252730000 |
| **Set of fixings** | |
| For label holders, rain hoods and document holders (rivet) | 1252190000 |
| For plastic (Trafolyte), identification plate (screw) | 1285200000 |
| **Earthing stud** | |
| Stainless steel 1.4404 | 1192690000 |

**Note**

## Max. number of terminals (industry)

| Max. number of terminals (industry) | vertical | horizontal |
|---|---|---|
| 2.5 mm² | 4x132 | 7x82 |
| 4 mm² | 4x111 | 6x69 |
| 6 mm² | 3x83 | 5x52 |
| 10 mm² | 3x67 | 5x42 |
| 16 mm² | 2x56 | 4x35 |
| 35 mm² | 2x42 | 3x26 |

**Note**

*For the enclosure versions with no, one or two gland plates, the horizontal distance between the mounting feet is reduced by 30 mm.
The assembly with modular terminals gives consideration to a distance of 10 mm from the end of each mounting rail.
Order recommendations:
TS 35 mounting rail (screw terminal) WDU 2.5 1020000000 / (tension clamp terminal) ZDU 2.5 1608510000 / (tension clamp terminal) PDU 2.5 1896110000
TS 32 mounting rail (screw terminal) SAK 2.5 0279660000
TS 15 mounting rail (screw terminal) AKZ 2.5 0697160000

## Number of cable entries

| Number of cable entries | A / B | C / D |
|---|---|---|
| M12 | 42 | 58 |
| M16 | 24 | 32 |
| M20 | 21 | 26 |
| M25 | 9 | 12 |
| M32 | 7 | 10 |
| M40 | 6 | 8 |
| M50 | 5 | 6 |
| M63 | 0 | 0 |
| M75 | 0 | 0 |

**Note** Our IP 68 brass cable glands are used as the reference for these guideline values.

## Dimensions of mounting plate

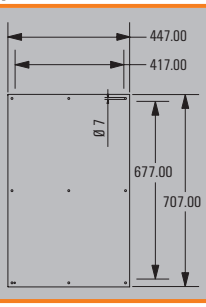

## Klippon® TB FS 765020

**Depth** 200 mm

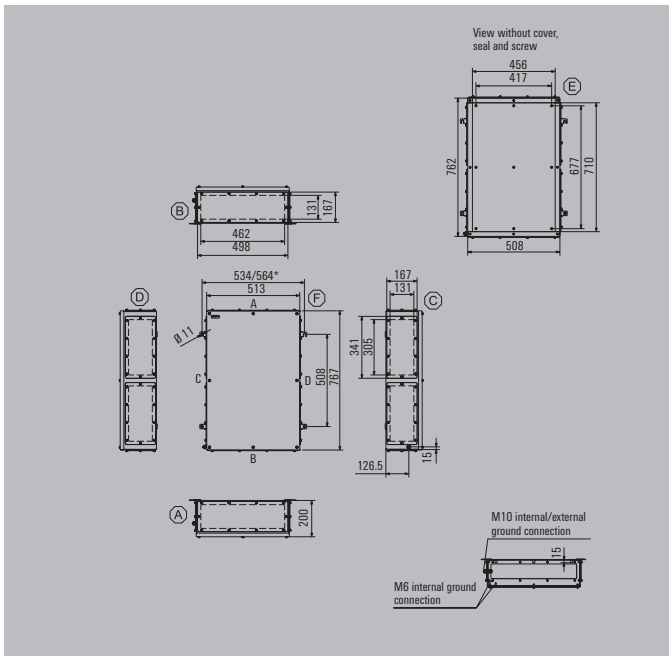


| | |
|---|---|
| Height/Width/Depth | 762 / 508 / 200 mm |

### Ordering data

| Stainless steel 1.4404 316L, electropolished | Order No. |
|---|---|
| 1 gland plate - bottom side (B) | 1196560000 |
| 2 gland plates - top and bottom sides (A & B) | 1196570000 |
| 3 gland plates - bottom, left and right sides (B, C & D) | 1196580000 |
| 4 gland plates - top, bottom, left and right sides (A, B, C & D) | 1196590000 |
| **Note** | Painted sheet steel enclosure available on request. The colours of painted enclosures may vary under certain circumstances. |

### Accessories

| Mounting plates and fastening screws | Order No. |
|---|---|
| Steel sheet, zinc plated | 1194030000 |
| Stainless steel 1.4301 | 1193900000 |
| With hole pattern, natural stainless steel 1.4301 | 1257750000 |
| Fastening screws for mounting plates | 0642600000 |
| Fastening screws for terminal rails | 1274150000 |
| **Stainless steel spacer M6 x 8, Set of 4** | |
| 10 mm length | 0935110000 |
| 15 mm length | 0935120000 |
| 20 mm length | 0935130000 |
| 30 mm length | 0935140000 |
| **Gland plates and screws - 6 mm** | |
| Top and bottom sides (A & B), electropolished stainless steel 1.4404 | 1256680000 |
| Left and right sides (C & D), electropolished stainless steel 1.4404 | 1256690000 |
| Mounting screw, stainless steel 1.4404 | 1253230000 |
| **Label holder** | |
| 70 x 70 angled stainless steel 1.4301 | 1279320000 |
| 130x50 stainless steel 1.4301 | 1283450000 |
| 100x25 stainless steel 1.4301 | 1257640000 |
| **Document holder** | |
| For DIN A6 size documents | 1252780000 |
| For DIN A5 size documents | 1252750000 |
| For DIN A4 size documents | 1252730000 |
| **Set of fixings** | |
| For label holders, rain hoods and document holders (rivet) | 1252190000 |
| For plastic (Trafolyte), identification plate (screw) | 1285200000 |
| **Earthing stud** | |
| Stainless steel 1.4404 | 1192690000 |

**Note**

### Max. number of terminals (industry)

| Max. number of terminals (industry) | vertical | horizontal |
|---|---|---|
| 2.5 mm² | 4x132 | 7x82 |
| 4 mm² | 4x111 | 6x69 |
| 6 mm² | 3x83 | 5x52 |
| 10 mm² | 3x67 | 5x42 |
| 16 mm² | 2x56 | 4x35 |
| 35 mm² | 2x42 | 3x26 |

**Note**

*For the enclosure versions with no, one or two gland plates, the horizontal distance between the mounting feet is reduced by 30 mm.
The assembly with modular terminals gives consideration to a distance of 10 mm from the end of each mounting rail.
Order recommendations:
TS 35 mounting rail (screw terminal) WDU 2.5 1020000000 / (tension clamp terminal) ZDU 2.5 1608510000 / (tension clamp terminal) PDU 2.5 1896110000
TS 32 mounting rail (screw terminal) SAK 2.5 0279660000
TS 15 mounting rail (screw terminal) AKZ 2.5 0697160000

### Number of cable entries

| Number of cable entries | A / B | C / D |
|---|---|---|
| M12 | 70 | 96 |
| M16 | 48 | 64 |
| M20 | 32 | 40 |
| M25 | 26 | 34 |
| M32 | 14 | 18 |
| M40 | 12 | 14 |
| M50 | 5 | 6 |
| M63 | 4 | 6 |
| M75 | 3 | 4 |

**Note** Our IP 68 brass cable glands are used as the reference for these guideline values.

### Dimensions of mounting plate

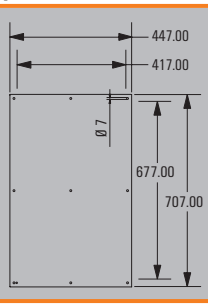

## Klippon® TB FS 916115

**Depth** 150 mm

| Height/Width/Depth | 914 / 610 / 150 mm |
|---|---|

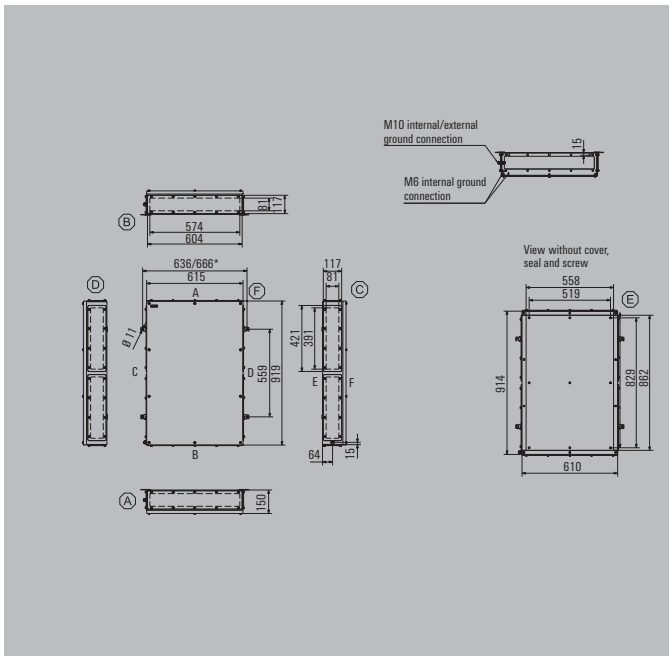


### Ordering data

| Stainless steel 1.4404 316L, electropolished | Order No. |
|---|---|
| 1 gland plate - bottom side (B) | 1196610000 |
| 2 gland plates - top and bottom sides (A & B) | 1196620000 |
| 3 gland plates - bottom, left and right sides (B, C & D) | 1196630000 |
| 4 gland plates - top, bottom, left and right sides (A, B, C & D) | 1196640000 |

**Note** Painted sheet steel enclosure available on request. The colours of painted enclosures may vary under certain circumstances.

### Accessories

| Mounting plates and fastening screws | Order No. |
|---|---|
| Steel sheet, zinc plated | 1194040000 |
| Stainless steel 1.4301 | 1193910000 |
| With hole pattern, natural stainless steel 1.4301 | 1257760000 |
| Fastening screws for mounting plates | 0642600000 |
| Fastening screws for terminal rails | 1274150000 |
| **Stainless steel spacer M6 x 8, Set of 4** | |
| 10 mm length | 0935110000 |
| 15 mm length | 0935120000 |
| 20 mm length | 0935130000 |
| 30 mm length | 0935140000 |
| **Gland plates and screws - 6 mm** | |
| Top and bottom sides (A & B), electropolished stainless steel 1.4404 | 1256710000 |
| Left and right sides (C & D), electropolished stainless steel 1.4404 | 1256720000 |
| Mounting screw, stainless steel 1.4404 | 1253230000 |
| **Label holder** | |
| 70 x 70 angled stainless steel 1.4301 | 1279320000 |
| 130x50 stainless steel 1.4301 | 1283450000 |
| 100x25 stainless steel 1.4301 | 1257640000 |
| **Document holder** | |
| For DIN A6 size documents | 1252780000 |
| For DIN A5 size documents | 1252750000 |
| For DIN A4 size documents | 1252730000 |
| **Set of fixings** | |
| For label holders, rain hoods and document holders (rivet) | 1252190000 |
| For plastic (Trafolyte), identification plate (screw) | 1285200000 |
| **Earthing stud** | |
| Stainless steel 1.4404 | 1192690000 |

**Note**

### Max. number of terminals (industry)

| Max. number of terminals (industry) | vertical | horizontal |
|---|---|---|
| 2.5 mm² | 5x161 | 8x102 |
| 4 mm² | 4x135 | 7x85 |
| 6 mm² | 4x102 | 7x64 |
| 10 mm² | 3x82 | 6x52 |
| 16 mm² | 3x68 | 5x43 |
| 35 mm² | 2x51 | 4x32 |

**Note** *For the enclosure versions with no, one or two gland plates, the horizontal distance between the mounting feet is reduced by 30 mm.
The assembly with modular terminals gives consideration to a distance of 10 mm from the end of each mounting rail.
Order recommendations:
TS 35 mounting rail (screw terminal) WDU 2.5 1020000000 / (tension clamp terminal) ZDU 2.5 1608510000 / (tension clamp terminal) PDU 2.5 1896110000
TS 32 mounting rail (screw terminal) SAK 2.5 0279660000
TS 15 mounting rail (screw terminal) AKZ 2.5 0697160000

### Number of cable entries

| Number of cable entries | A / B | C / D |
|---|---|---|
| M12 | 53 | 70 |
| M16 | 29 | 40 |
| M20 | 25 | 34 |
| M25 | 11 | 14 |
| M32 | 9 | 12 |
| M40 | 8 | 10 |
| M50 | 6 | 8 |
| M63 | 0 | 0 |
| M75 | 0 | 0 |

**Note** Our IP 68 brass cable glands are used as the reference for these guideline values.

### Dimensions of mounting plate

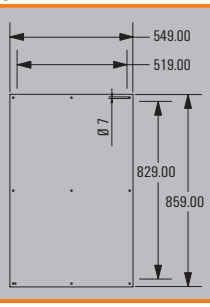

## Klippon® TB FS 916120

**Depth** 200 mm

| | |
|---|---|
| Height/Width/Depth | 914 / 610 / 200 mm |

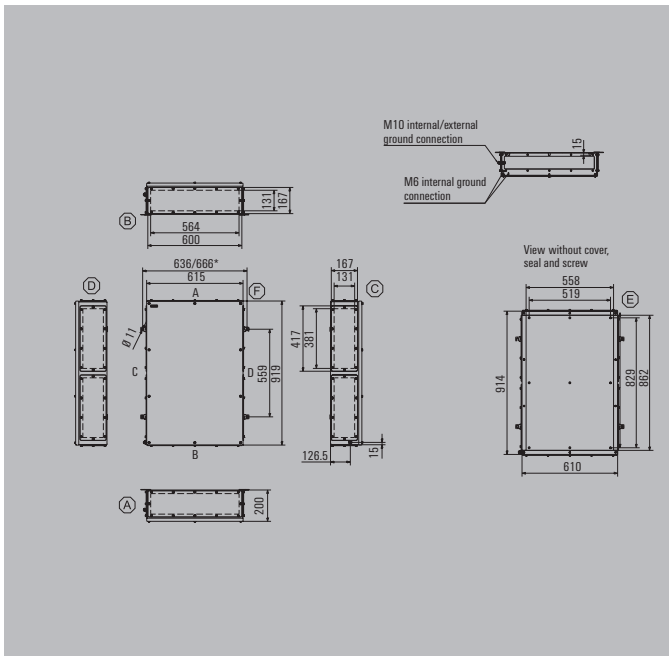


### Ordering data

| Stainless steel 1.4404 316L, electropolished | Order No. |
|---|---|
| 1 gland plate - bottom side (B) | 1196660000 |
| 2 gland plates - top and bottom sides (A & B) | 1196670000 |
| 3 gland plates - bottom, left and right sides (B, C & D) | 1196680000 |
| 4 gland plates - top, bottom, left and right sides (A, B, C & D) | 1196690000 |

**Note** Painted sheet steel enclosure available on request. The colours of painted enclosures may vary under certain circumstances.

### Accessories

| Mounting plates and fastening screws | Order No. |
|---|---|
| Steel sheet, zinc plated | 1194040000 |
| Stainless steel 1.4301 | 1193910000 |
| With hole pattern, natural stainless steel 1.4301 | 1257760000 |
| Fastening screws for mounting plates | 0642600000 |
| Fastening screws for terminal rails | 1274150000 |
| **Stainless steel spacer M6 x 8, Set of 4** | |
| 10 mm length | 0935110000 |
| 15 mm length | 0935120000 |
| 20 mm length | 0935130000 |
| 30 mm length | 0935140000 |
| **Gland plates and screws - 6 mm** | |
| Top and bottom sides (A & B), electropolished stainless steel 1.4404 | 1256730000 |
| Left and right sides (C & D), electropolished stainless steel 1.4404 | 1256740000 |
| Mounting screw, stainless steel 1.4404 | 1253230000 |
| **Label holder** | |
| 70 x 70 angled stainless steel 1.4301 | 1279320000 |
| 130x50 stainless steel 1.4301 | 1283450000 |
| 100x25 stainless steel 1.4301 | 1257640000 |
| **Document holder** | |
| For DIN A6 size documents | 1252780000 |
| For DIN A5 size documents | 1252750000 |
| For DIN A4 size documents | 1252730000 |
| **Set of fixings** | |
| For label holders, rain hoods and document holders (rivet) | 1252190000 |
| For plastic (Trafolyte), identification plate (screw) | 1285200000 |
| **Earthing stud** | |
| Stainless steel 1.4404 | 1192690000 |

**Note**

### Max. number of terminals (industry)

| Max. number of terminals (industry) | vertical | horizontal |
|---|---|---|
| 2.5 mm² | 5x161 | 8x102 |
| 4 mm² | 4x135 | 7x85 |
| 6 mm² | 4x102 | 7x64 |
| 10 mm² | 3x82 | 6x52 |
| 16 mm² | 3x68 | 5x43 |
| 35 mm² | 2x51 | 4x32 |

**Note** *For the enclosure versions with no, one or two gland plates, the horizontal distance between the mounting feet is reduced by 30 mm.
The assembly with modular terminals gives consideration to a distance of 10 mm from the end of each mounting rail.
Order recommendations:
TS 35 mounting rail (screw terminal) WDU 2.5 1020000000 / (tension clamp terminal) ZDU 2.5 1608510000 / (tension clamp terminal) PDU 2.5 1896110000
TS 32 mounting rail (screw terminal) SAK 2.5 0279660000
TS 15 mounting rail (screw terminal) AKZ 2.5 0697160000

### Number of cable entries

| Number of cable entries | A / B | C / D |
|---|---|---|
| M12 | 88 | 116 |
| M16 | 58 | 80 |
| M20 | 38 | 52 |
| M25 | 33 | 42 |
| M32 | 18 | 24 |
| M40 | 15 | 20 |
| M50 | 6 | 8 |
| M63 | 5 | 6 |
| M75 | 4 | 6 |

**Note** Our IP 68 brass cable glands are used as the reference for these guideline values.

### Dimensions of mounting plate

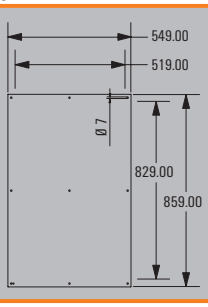

## Klippon® TB FS 987426

**Depth** **200 mm**

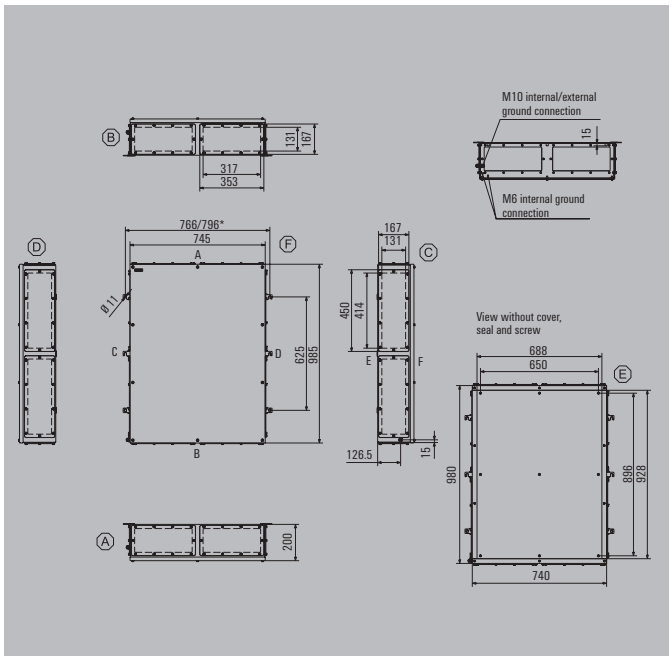


| | |
|---|---|
| Height/Width/Depth | 980 / 740 / 200 mm |

### Ordering data

| Stainless steel 1.4404 316L, electropolished | Order No. |
|---|---|
| 1 gland plate - bottom side (B) | 1196710000 |
| 2 gland plates - top and bottom sides (A & B) | 1196720000 |
| 3 gland plates - bottom, left and right sides (B, C & D) | 1196730000 |
| 4 gland plates - top, bottom, left and right sides (A, B, C & D) | 1196740000 |
| **Note** | Painted sheet steel enclosure available on request. The colours of painted enclosures may vary under certain circumstances. |

### Accessories

| Mounting plates and fastening screws | Order No. |
|---|---|
| Steel sheet, zinc plated | 1194050000 |
| Stainless steel 1.4301 | 1193920000 |
| With hole pattern, natural stainless steel 1.4301 | 1257770000 |
| Fastening screws for mounting plates | 0642600000 |
| Fastening screws for terminal rails | 1274150000 |
| **Stainless steel spacer M6 x 8, Set of 4** | |
| 10 mm length | 0935110000 |
| 15 mm length | 0935120000 |
| 20 mm length | 0935130000 |
| 30 mm length | 0935140000 |
| **Gland plates and screws - 6 mm** | |
| Top and bottom sides (A & B), electropolished stainless steel 1.4404 | 1256750000 |
| Left and right sides (C & D), electropolished stainless steel 1.4404 | 1256760000 |
| Mounting screw, stainless steel 1.4404 | 1253230000 |
| **Label holder** | |
| 70 x 70 angled stainless steel 1.4301 | 1279320000 |
| 130x50 stainless steel 1.4301 | 1283450000 |
| 100x25 stainless steel 1.4301 | 1257640000 |
| **Document holder** | |
| For DIN A6 size documents | 1252780000 |
| For DIN A5 size documents | 1252750000 |
| For DIN A4 size documents | 1252730000 |
| **Set of fixings** | |
| For label holders, rain hoods and document holders (rivet) | 1252190000 |
| For plastic (Trafolyte), identification plate (screw) | 1285200000 |
| **Earthing stud** | |
| Stainless steel 1.4404 | 1192690000 |

**Note**

### Max. number of terminals (industry)

| Max. number of terminals (industry) | vertical | horizontal |
|---|---|---|
| 2.5 mm² | 6x174 | 9x127 |
| 4 mm² | 6x146 | 8x106 |
| 6 mm² | 5x110 | 7x80 |
| 10 mm² | 4x88 | 6x64 |
| 16 mm² | 4x74 | 5x54 |
| 35 mm² | 3x55 | 4x40 |

**Note**

*For the enclosure versions with no, one or two gland plates, the horizontal distance between the mounting feet is reduced by 30 mm.
The assembly with modular terminals gives consideration to a distance of 10 mm from the end of each mounting rail.
Order recommendations:
TS 35 mounting rail (screw terminal) WDU 2.5 1020000000 / (tension clamp terminal) ZDU 2.5 1608510000 / (tension clamp terminal) PDU 2.5 1896110000
TS 32 mounting rail (screw terminal) SAK 2.5 0279660000
TS 15 mounting rail (screw terminal) AKZ 2.5 0697160000

### Number of cable entries

| Number of cable entries | A / B | C / D |
|---|---|---|
| M12 | 96 | 126 |
| M16 | 64 | 84 |
| M20 | 42 | 54 |
| M25 | 36 | 48 |
| M32 | 20 | 26 |
| M40 | 16 | 22 |
| M50 | 6 | 10 |
| M63 | 6 | 8 |
| M75 | 4 | 6 |
| **Note** | Our IP 68 brass cable glands are used as the reference for these guideline values. | |

### Dimensions of mounting plate

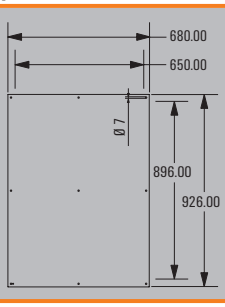

# Klippon® TBi QL - Quarter Lock

**Stainless steel enclosures**
**for use within harsh industrial environments**

Even under moderate environmental conditions, there is an increasing need for complex, individual automated solutions. A harsh industrial environment places additional, heavy demands on applications and determines the design of the industrial enclosures to meet these demands. With complete protection and excellent durability, our Klippon® TBi stainless steel enclosures offer the best protection for the components inside them. Its electro-polished surface makes the enclosure extraordinarily resistant to corrosion.

- Available in 11 sizes and 2 depths
- Operating temperature range -40 °C to +85 °C
- Impact resistance of 10 J Industrial application
- Dedicated internal mounting support bracket for fixing terminal rail or mounting plates with self forming screws
- External Earth point – suitable for M6 threaded screw
- Concealed hinges
- Internal earth stud – M6 screw fitted to enclosure lid and base
- Supplied in 0 or 1 gland plate version
- Direct enclosure mounting is provided via the fixing positions placed into the rear of the enclosure
- Mounting feet in stainless steel are optionally available and can be rotated 90°
- Dust and moisture channel
- Double-bit locking system

Our assembly service can supply these enclosure preassembled with terminals and cable glands according to customer requirements.

NEW

c UL us LISTED

## Overview of enclosures

### Ordering data

| Description | Height x width x depth in mm | 0 Gland Plate | 1 Gland Plate (below) |
|---|---|---|---|
| KTBi QL 302015 S2E_* | 300 x 200 x 150 | 1197430000 | 1197440000 |
| KTBi QL 303015 S2E_* | 300 x 300 x 150 | 1197450000 | 1197460000 |
| KTBi QL 303022 S2E_* | 300 x 300 x 220 | 1197470000 | 1197480000 |
| KTBi QL 403015 S2E_* | 400 x 300 x 150 | 1197490000 | 1197500000 |
| KTBi QL 403022 S2E_* | 400 x 300 x 220 | 1197510000 | 1197520000 |
| KTBi QL 404022 S2E_* | 400 x 400 x 220 | 1197530000 | 1197540000 |
| KTBi QL 504022 S2E_* | 500 x 400 x 220 | 1197550000 | 1197560000 |
| KTBi QL 505022 S2E_* | 500 x 500 x 220 | 1197570000 | 1197580000 |
| KTBi QL 604022 S2E_* | 600 x 400 x 220 | 1197590000 | 1197600000 |
| KTBi QL 606022 S2E_* | 600 x 600 x 220 | 1197610000 | 1197620000 |
| KTBi QL 806022 S2E_* | 800 x 600 x 220 | 1197630000 | 1197640000 |
| **Note** | *Placeholder for the number of gland plates (0 or 1) | | |

## Technical Overview

### Features

| |
|---|
| • Available in 11 sizes and 2 standard depths |
| • Welded mounting bracket for securing the mounting plate or mounting rail by means of self-tapping screws |
| • External earth - M6 earth tab rivet |
| • Concealed hinges |
| • M6 earthing bolt welded in the cover and base of the enclosure |
| • Available with 0 or 1 flange plates |
| • Optimised laser welding, high quality standard |
| • Direct mounting of the enclosure with rear mounting holes |
| • Mounting feet in stainless steel are optionally available, and can be rotated by 90° |
| • Moisture and dust channel |
| • Double-bit locking system |
| • Permanent labelling of items |
| • Multi-functional tool included |
| • Packaging optimally designed for enclosure |
| **Note** |

### Technical data

| | |
|---|---|
| Material | Stainless steel 1.4301 1.5 mm |
| Surface | Electroplished |
| IP protection class | IP 66 |
| NEMA Rating | 3, 4x, 5 |
| Gland plates | 1.5 mm thick stainless steel 1.4301 (304) flange plates, mounted with M6 screws, spanner size 10 mm |
| Earthing inside | Welded-on M6 stainless-steel earth stud in enclosure lid and base |
| Earthing outside | External earth position – suitable for M6 threaded screw |
| Installation mounting | Welded mounting bracket for flexible mounting of the mounting plate, rails or TAS 20 rails.<br>They contain 4.51 mm drill holes for accommodating the mounting plate or TS/TAS by means of self-tapping screws (1274150000) |
| Enclosure attachment | Direct mounting (11 mm mounting holes on rear wall) or via mounting feet (optionally available), adjustable by 90° |
| Lid opening | 125° |
| Lid fixing | Quarter lock with double bit |
| Impact resistance | 10J |
| Gasket material | Neoprene - CR |
| Operating temperature range | -40 °C ... +85 °C |
| Tightening torque of gland plates screws* | 2.5 Nm |
| **Note** | *Please use our hexagon screwdriver with 10 mm size (9009070000) |

### Approvals for empty enclosures

| | |
|---|---|
| DIN EN 62208 | Empty enclosure standard |
| Germanischer Lloyd | 20 593 - 11 HH |
| cULus | E243298 |
| **Note** | |

## Klippon® TBi QL 302015

**Depth** 150 mm

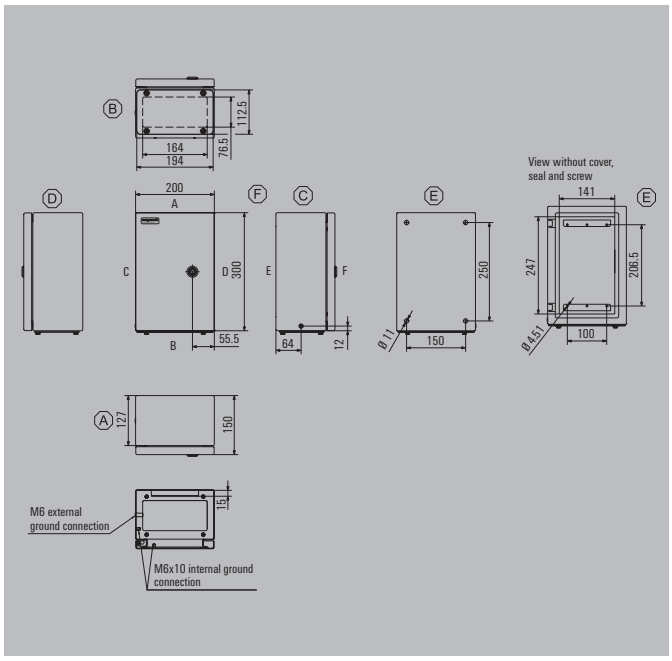


| | |
|---|---|
| Height/Width/Depth | 300 / 200 / 150 mm |

### Ordering data

| Stainless steel 1.4301 304, electropolished | Order No. |
|---|---|
| 0 gland plate | 1197430000 |
| 1 gland plate - bottom side (B) | 1197440000 |

**Note**

### Accessories

| Mounting plates and fastening screws | Order No. |
|---|---|
| Steel sheet, zinc plated | 1309690000 |
| Stainless steel 1.4301 | 1309700000 |
| Fastening screws for terminal rails | 1274150000 |
| **Stainless steel spacer M6 x 8, Set of 4** | |
| 10 mm length | 0935110000 |
| 15 mm length | 0935120000 |
| 20 mm length | 0935130000 |
| 30 mm length | 0935140000 |
| **Mild steel nickel plated Spacer M6 x 8, set of 2** | |
| 15 mm length | 3896100000 |
| 20 mm length | 3896200000 |
| 30 mm length | 3896300000 |
| **Mounting feet, set containing 4 pieces each** | |
| Stainless steel 1.4301 | 1289180000 |
| **Lock inserts** | |
| Double-bit | 1191590000 |
| Slot | 1191600000 |

### Max. number of terminals (industry)

| Max. number of terminals (industry) | vertical | horizontal |
|---|---|---|
| 2.5 mm² | 1x36 | 3x17 |
| 4 mm² | 1x30 | 3x14 |
| 6 mm² | 1x23 | 3x11 |
| 10 mm² | 1x18 | 3x9 |
| 16 mm² | 1x15 | 3x7 |
| 35 mm² | 1x11 | 3x5 |

**Note**

The assembly with modular terminals gives consideration to a distance of 10 mm from the end of each mounting rail.
Order recommendations:
TS 35 mounting rail (screw terminal) WDU 2.5 1020000000 / (tension clamp terminal) ZDU 2.5 1608510000 / (tension clamp terminal) PDU 2.5 1896110000
TS 32 mounting rail (screw terminal) SAK 2.5 0279660000
TS 15 mounting rail (screw terminal) AKZ 2.5 0697160000

### Number of cable entries

| Number of cable entries | A / B | C / D |
|---|---|---|
| M12 | 14 | |
| M16 | 7 | |
| M20 | 6 | |
| M25 | 3 | |
| M32 | 2 | |
| M40 | 2 | |
| M50 | 1 | |
| M63 | | |
| M75 | | |

**Note** Our IP 68 brass cable glands are used as the reference for these guideline values.

**Note**

## Klippon® TBi QL 303015

**Depth** 150 mm

| Height/Width/Depth | 300 / 300 / 150 mm |
|---|---|

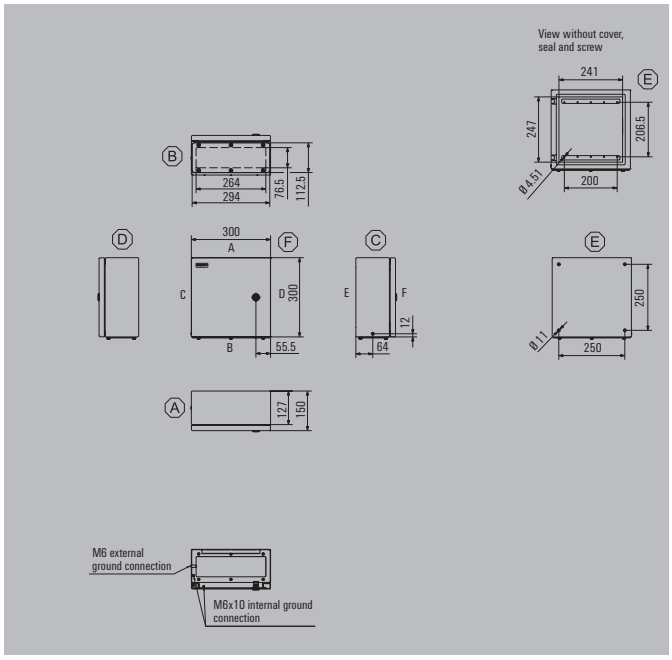


### Ordering data

| Stainless steel 1.4301 304, electropolished | Order No. |
|---|---|
| 0 gland plate | 1197450000 |
| 1 gland plate - bottom side (B) | 1197460000 |

**Note**

### Max. number of terminals (industry)

| Max. number of terminals (industry) | vertical | horizontal |
|---|---|---|
| 2.5 mm² | 3x36 | 3x36 |
| 4 mm² | 3x30 | 3x30 |
| 6 mm² | 3x23 | 3x23 |
| 10 mm² | 3x18 | 3x18 |
| 16 mm² | 3x15 | 3x15 |
| 35 mm² | 3x11 | 3x11 |

**Note**

The assembly with modular terminals gives consideration to a distance of 10 mm from the end of each mounting rail.
Order recommendations:
TS 35 mounting rail (screw terminal) WDU 2.5 1020000000 / (tension clamp terminal) ZDU 2.5 1608510000 / (tension clamp terminal) PDU 2.5 1896110000
TS 32 mounting rail (screw terminal) SAK 2.5 0279660000
TS 15 mounting rail (screw terminal) AKZ 2.5 0697160000

### Accessories

| Mounting plates and fastening screws | Order No. |
|---|---|
| Steel sheet, zinc plated | 1310410000 |
| Stainless steel 1.4301 | 1310320000 |
| Fastening screws for terminal rails | 1274150000 |
| **Stainless steel spacer M6 x 8, Set of 4** | |
| 10 mm length | 0935110000 |
| 15 mm length | 0935120000 |
| 20 mm length | 0935130000 |
| 30 mm length | 0935140000 |
| **Mild steel nickel plated Spacer M6 x 8, set of 2** | |
| 15 mm length | 3896100000 |
| 20 mm length | 3896200000 |
| 30 mm length | 3896300000 |
| **Mounting feet, set containing 4 pieces each** | |
| Stainless steel 1.4301 | 1289180000 |
| **Lock inserts** | |
| Double-bit | 1191590000 |
| Slot | 1191600000 |

### Number of cable entries

| Number of cable entries | A / B | C / D |
|---|---|---|
| M12 | 23 | |
| M16 | 13 | |
| M20 | 11 | |
| M25 | 5 | |
| M32 | 4 | |
| M40 | 3 | |
| M50 | 3 | |
| M63 | | |
| M75 | | |

**Note** Our IP 68 brass cable glands are used as the reference for these guideline values.

**Note**

## Klippon® TBi QL 303022

**Depth** 220 mm

| Height/Width/Depth | 300 / 300 / 220 mm |
|---|---|

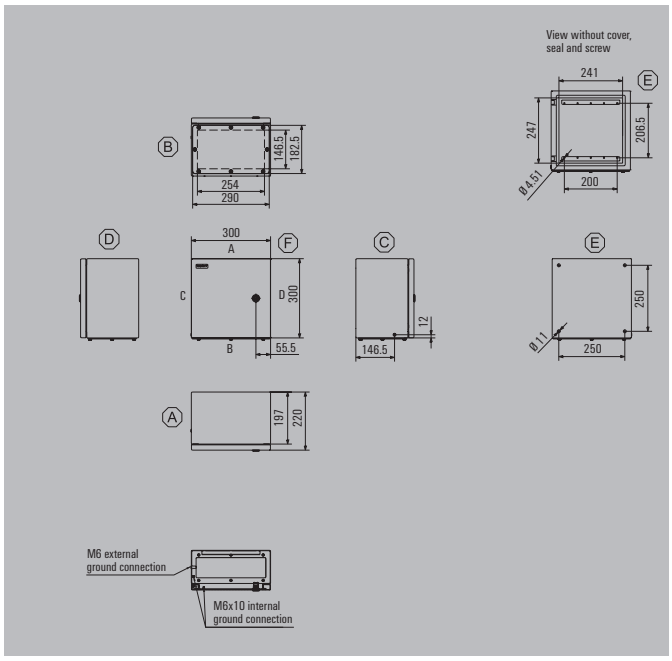


### Ordering data

| Stainless steel 1.4301 304, electropolished | Order No. |
|---|---|
| 0 gland plate | 1197470000 |
| 1 gland plate - bottom side (B) | 1197480000 |

**Note**

### Accessories

| Mounting plates and fastening screws | Order No. |
|---|---|
| Steel sheet, zinc plated | 1310410000 |
| Stainless steel 1.4301 | 1310320000 |
| Fastening screws for terminal rails | 1274150000 |
| **Stainless steel spacer M6 x 8, Set of 4** | |
| 10 mm length | 0935110000 |
| 15 mm length | 0935120000 |
| 20 mm length | 0935130000 |
| 30 mm length | 0935140000 |
| **Mild steel nickel plated Spacer M6 x 8, set of 2** | |
| 15 mm length | 3896100000 |
| 20 mm length | 3896200000 |
| 30 mm length | 3896300000 |
| **Mounting feet, set containing 4 pieces each** | |
| Stainless steel 1.4301 | 1289180000 |
| **Lock inserts** | |
| Double-bit | 1191590000 |
| Slot | 1191600000 |

### Max. number of terminals (industry)

| Max. number of terminals (industry) | vertical | horizontal |
|---|---|---|
| 2.5 mm² | 3x36 | 3x36 |
| 4 mm² | 3x30 | 3x30 |
| 6 mm² | 3x23 | 3x23 |
| 10 mm² | 3x18 | 3x18 |
| 16 mm² | 3x15 | 3x15 |
| 35 mm² | 3x11 | 3x11 |

**Note**

The assembly with modular terminals gives consideration to a distance of 10 mm from the end of each mounting rail.
Order recommendations:
TS 35 mounting rail (screw terminal) WDU 2.5 1020000000 / (tension clamp terminal) ZDU 2.5 1608510000 / (tension clamp terminal) PDU 2.5 1896110000
TS 32 mounting rail (screw terminal) SAK 2.5 0279660000
TS 15 mounting rail (screw terminal) AKZ 2.5 0697160000

### Number of cable entries

| Number of cable entries | A / B | C / D |
|---|---|---|
| M12 | 38 | |
| M16 | 26 | |
| M20 | 22 | |
| M25 | 14 | |
| M32 | 7 | |
| M40 | 6 | |
| M50 | 3 | |
| M63 | 2 | |
| M75 | 2 | |

**Note** Our IP 68 brass cable glands are used as the reference for these guideline values.

**Note**

## Klippon® TBi QL 403015

**Depth** 150 mm

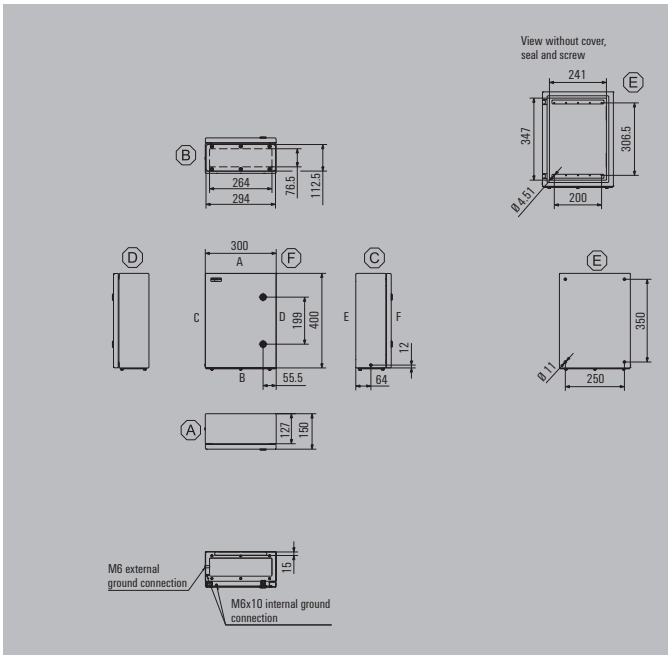


| Height/Width/Depth | 400 / 300 / 150 mm |
|---|---|

### Ordering data

| Stainless steel 1.4301 304, electropolished | Order No. |
|---|---|
| 0 gland plate | 1197490000 |
| 1 gland plate - bottom side (B) | 1197500000 |

**Note**

### Accessories

| Mounting plates and fastening screws | Order No. |
|---|---|
| Steel sheet, zinc plated | 1310420000 |
| Stainless steel 1.4301 | 1310330000 |
| Fastening screws for terminal rails | 1274150000 |
| **Stainless steel spacer M6 x 8, Set of 4** | |
| 10 mm length | 0935110000 |
| 15 mm length | 0935120000 |
| 20 mm length | 0935130000 |
| 30 mm length | 0935140000 |
| **Mild steel nickel plated Spacer M6 x 8, set of 2** | |
| 15 mm length | 3896100000 |
| 20 mm length | 3896200000 |
| 30 mm length | 3896300000 |
| **Mounting feet, set containing 4 pieces each** | |
| Stainless steel 1.4301 | 1289180000 |
| **Lock inserts** | |
| Double-bit | 1191590000 |
| Slot | 1191600000 |

### Max. number of terminals (industry)

| Max. number of terminals (industry) | vertical | horizontal |
|---|---|---|
| 2.5 mm² | 3x56 | 4x36 |
| 4 mm² | 3x47 | 4x30 |
| 6 mm² | 3x35 | 4x23 |
| 10 mm² | 3x28 | 4x18 |
| 16 mm² | 3x23 | 4x15 |
| 35 mm² | 3x18 | 4x11 |

**Note**

The assembly with modular terminals gives consideration to a distance of 10 mm from the end of each mounting rail.
Order recommendations:
TS 35 mounting rail (screw terminal) WDU 2.5 1020000000 / (tension clamp terminal) ZDU 2.5 1608510000 / (tension clamp terminal) PDU 2.5 1896110000
TS 32 mounting rail (screw terminal) SAK 2.5 0279660000
TS 15 mounting rail (screw terminal) AKZ 2.5 0697160000

### Number of cable entries

| Number of cable entries | A / B | C / D |
|---|---|---|
| M12 | 23 | |
| M16 | 13 | |
| M20 | 11 | |
| M25 | 5 | |
| M32 | 4 | |
| M40 | 3 | |
| M50 | 3 | |
| M63 | | |
| M75 | | |

**Note** Our IP 68 brass cable glands are used as the reference for these guideline values.

**Note**

## Klippon® TBi QL 403022

**Depth** 220 mm

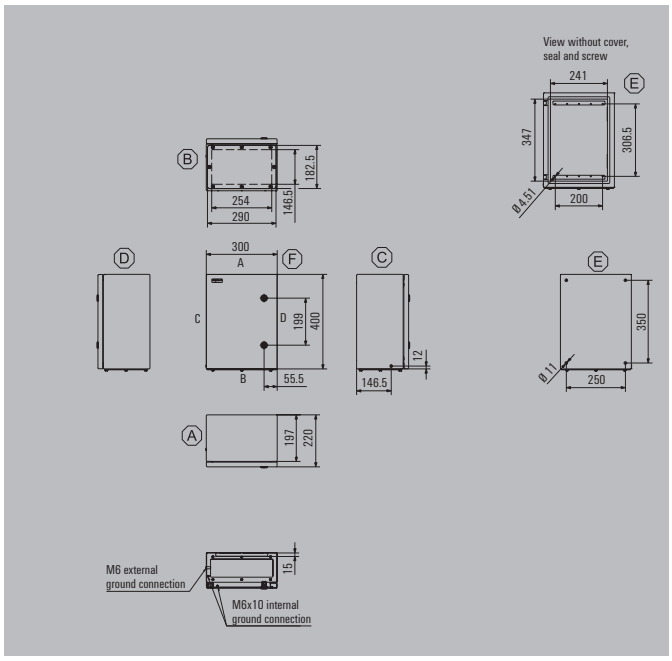


| Height/Width/Depth | 400 / 300 / 220 mm |
|---|---|

### Ordering data

| Stainless steel 1.4301 304, electropolished | Order No. |
|---|---|
| 0 gland plate | 1197510000 |
| 1 gland plate - bottom side (B) | 1197520000 |

**Note**

### Accessories

| Mounting plates and fastening screws | Order No. |
|---|---|
| Steel sheet, zinc plated | 1310420000 |
| Stainless steel 1.4301 | 1310330000 |
| Fastening screws for terminal rails | 1274150000 |
| **Stainless steel spacer M6 x 8, Set of 4** | |
| 10 mm length | 0935110000 |
| 15 mm length | 0935120000 |
| 20 mm length | 0935130000 |
| 30 mm length | 0935140000 |
| **Mild steel nickel plated Spacer M6 x 8, set of 2** | |
| 15 mm length | 3896100000 |
| 20 mm length | 3896200000 |
| 30 mm length | 3896300000 |
| **Mounting feet, set containing 4 pieces each** | |
| Stainless steel 1.4301 | 1289180000 |
| **Lock inserts** | |
| Double-bit | 1191590000 |
| Slot | 1191600000 |

### Max. number of terminals (industry)

| Max. number of terminals (industry) | vertical | horizontal |
|---|---|---|
| 2.5 mm² | 3x56 | 4x36 |
| 4 mm² | 3x47 | 4x30 |
| 6 mm² | 3x35 | 4x23 |
| 10 mm² | 3x28 | 4x18 |
| 16 mm² | 3x23 | 4x15 |
| 35 mm² | 3x18 | 4x11 |

**Note**

The assembly with modular terminals gives consideration to a distance of 10 mm from the end of each mounting rail.
Order recommendations:
TS 35 mounting rail (screw terminal) WDU 2.5 1020000000 / (tension clamp terminal) ZDU 2.5 1608510000 / (tension clamp terminal) PDU 2.5 1896110000
TS 32 mounting rail (screw terminal) SAK 2.5 0279660000
TS 15 mounting rail (screw terminal) AKZ 2.5 0697160000

### Number of cable entries

| Number of cable entries | A / B | C / D |
|---|---|---|
| M12 | 38 | |
| M16 | 26 | |
| M20 | 22 | |
| M25 | 14 | |
| M32 | 7 | |
| M40 | 6 | |
| M50 | 3 | |
| M63 | 2 | |
| M75 | 2 | |

**Note** Our IP 68 brass cable glands are used as the reference for these guideline values.

**Note**

## Klippon® TBi QL 404022

**Depth 220 mm**

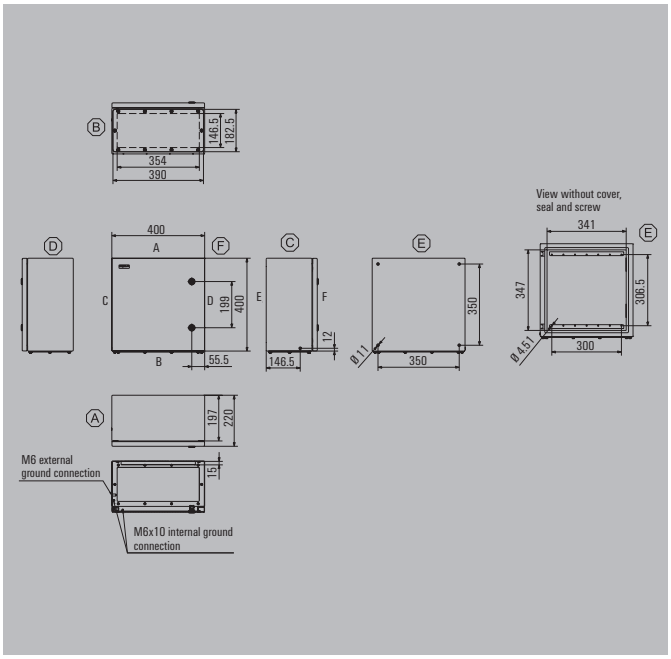


| Height/Width/Depth | 400 / 400 / 220 mm |
|---|---|

### Ordering data

| Stainless steel 1.4301 304, electropolished | Order No. |
|---|---|
| 0 gland plate | 1197530000 |
| 1 gland plate - bottom side (B) | 1197540000 |

**Note**

### Max. number of terminals (industry)

| Max. number of terminals (industry) | vertical | horizontal |
|---|---|---|
| 2.5 mm² | 4x56 | 4x56 |
| 4 mm² | 4x47 | 4x47 |
| 6 mm² | 4x35 | 4x35 |
| 10 mm² | 4x28 | 4x28 |
| 16 mm² | 4x23 | 4x23 |
| 35 mm² | 4x18 | 4x18 |

**Note**

The assembly with modular terminals gives consideration to a distance of 10 mm from the end of each mounting rail.
Order recommendations:
TS 35 mounting rail (screw terminal) WDU 2.5 1020000000 / (tension clamp terminal) ZDU 2.5 1608510000 / (tension clamp terminal) PDU 2.5 1896110000
TS 32 mounting rail (screw terminal) SAK 2.5 0279660000
TS 15 mounting rail (screw terminal) AKZ 2.5 0697160000

### Accessories

| Mounting plates and fastening screws | Order No. |
|---|---|
| Steel sheet, zinc plated | 1310430000 |
| Stainless steel 1.4301 | 1310340000 |
| Fastening screws for terminal rails | 1274150000 |
| **Stainless steel spacer M6 x 8, Set of 4** | |
| 10 mm length | 0935110000 |
| 15 mm length | 0935120000 |
| 20 mm length | 0935130000 |
| 30 mm length | 0935140000 |
| **Mild steel nickel plated Spacer M6 x 8, set of 2** | |
| 15 mm length | 3896100000 |
| 20 mm length | 3896200000 |
| 30 mm length | 3896300000 |
| **Mounting feet, set containing 4 pieces each** | |
| Stainless steel 1.4301 | 1289180000 |
| **Lock inserts** | |
| Double-bit | 1191590000 |
| Slot | 1191600000 |

### Number of cable entries

| Number of cable entries | A / B | C / D |
|---|---|---|
| M12 | 53 | |
| M16 | 36 | |
| M20 | 30 | |
| M25 | 20 | |
| M32 | 11 | |
| M40 | 9 | |
| M50 | 4 | |
| M63 | 3 | |
| M75 | 3 | |

**Note** Our IP 68 brass cable glands are used as the reference for these guideline values.

**Note**

## Klippon® TBi QL 504022

**Depth** 220 mm

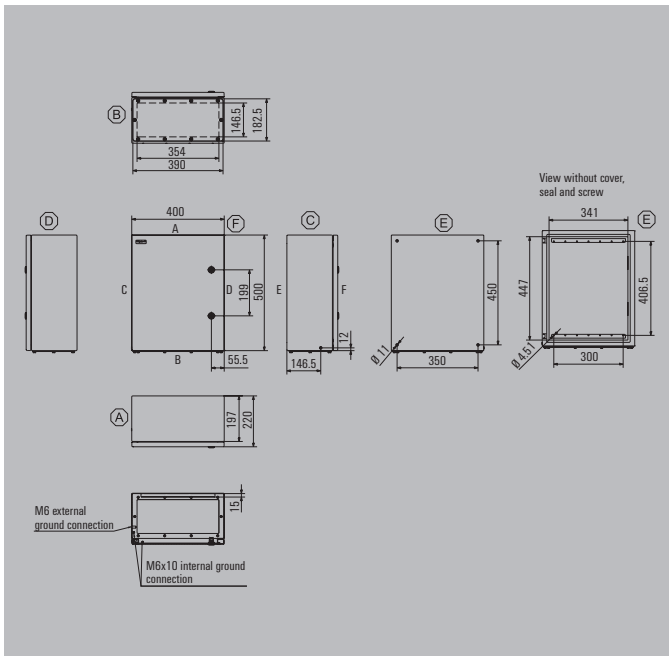


| | |
|---|---|
| Height/Width/Depth | 500 / 400 / 220 mm |

### Ordering data

| Stainless steel 1.4301 304, electropolished | Order No. |
|---|---|
| 0 gland plate | 1197550000 |
| 1 gland plate - bottom side (B) | 1197560000 |

**Note**

### Accessories

| Mounting plates and fastening screws | Order No. |
|---|---|
| Steel sheet, zinc plated | 1310440000 |
| Stainless steel 1.4301 | 1310350000 |
| Fastening screws for terminal rails | 1274150000 |
| **Stainless steel spacer M6 x 8, Set of 4** | |
| 10 mm length | 0935110000 |
| 15 mm length | 0935120000 |
| 20 mm length | 0935130000 |
| 30 mm length | 0935140000 |
| **Mild steel nickel plated Spacer M6 x 8, set of 2** | |
| 15 mm length | 3896100000 |
| 20 mm length | 3896200000 |
| 30 mm length | 3896300000 |
| **Mounting feet, set containing 4 pieces each** | |
| Stainless steel 1.4301 | 1289180000 |
| **Lock inserts** | |
| Double-bit | 1191590000 |
| Slot | 1191600000 |

### Max. number of terminals (industry)

| Max. number of terminals (industry) | vertical | horizontal |
|---|---|---|
| 2.5 mm² | 4x75 | 6x56 |
| 4 mm² | 4x63 | 6x47 |
| 6 mm² | 4x47 | 6x35 |
| 10 mm² | 4x38 | 6x28 |
| 16 mm² | 4x32 | 6x23 |
| 35 mm² | 4x24 | 6x18 |

**Note**

The assembly with modular terminals gives consideration to a distance of 10 mm from the end of each mounting rail.
Order recommendations:
TS 35 mounting rail (screw terminal) WDU 2.5 1020000000 / (tension clamp terminal) ZDU 2.5 1608510000 / (tension clamp terminal) PDU 2.5 1896110000
TS 32 mounting rail (screw terminal) SAK 2.5 0279660000
TS 15 mounting rail (screw terminal) AKZ 2.5 0697160000

### Number of cable entries

| Number of cable entries | A / B | C / D |
|---|---|---|
| M12 | 53 | |
| M16 | 36 | |
| M20 | 30 | |
| M25 | 20 | |
| M32 | 11 | |
| M40 | 9 | |
| M50 | 4 | |
| M63 | 3 | |
| M75 | 3 | |

**Note** Our IP 68 brass cable glands are used as the reference for these guideline values.

**Note**

## Klippon® TBi QL 505022

**Depth** 220 mm

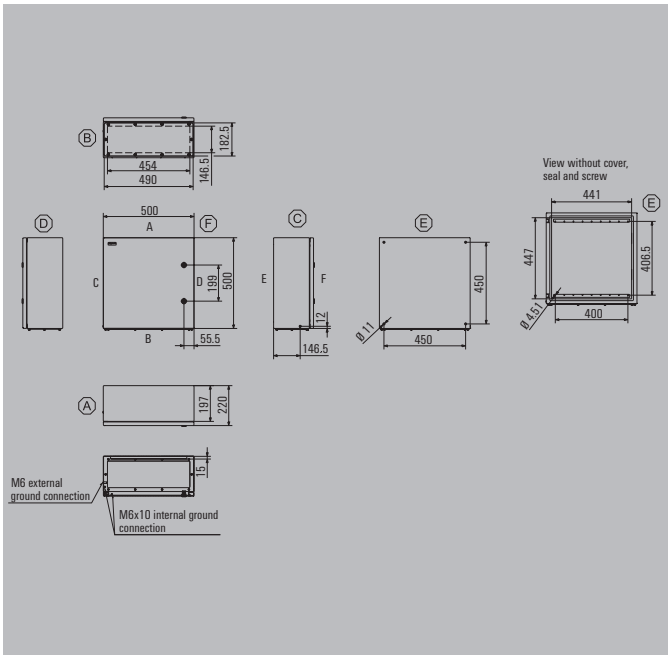


| | |
|---|---|
| Height/Width/Depth | 500 / 500 / 220 mm |

### Ordering data

| Stainless steel 1.4301 304, electropolished | Order No. |
|---|---|
| 0 gland plate | 1197570000 |
| 1 gland plate - bottom side (B) | 1197580000 |

**Note**

### Accessories

| Mounting plates and fastening screws | Order No. |
|---|---|
| Steel sheet, zinc plated | 1310450000 |
| Stainless steel 1.4301 | 1310360000 |
| Fastening screws for terminal rails | 1274150000 |
| **Stainless steel spacer M6 x 8, Set of 4** | |
| 10 mm length | 0935110000 |
| 15 mm length | 0935120000 |
| 20 mm length | 0935130000 |
| 30 mm length | 0935140000 |
| **Mild steel nickel plated Spacer M6 x 8, set of 2** | |
| 15 mm length | 3896100000 |
| 20 mm length | 3896200000 |
| 30 mm length | 3896300000 |
| **Mounting feet, set containing 4 pieces each** | |
| Stainless steel 1.4301 | 1289180000 |
| **Lock inserts** | |
| Double-bit | 1191590000 |
| Slot | 1191600000 |

### Max. number of terminals (industry)

| Max. number of terminals (industry) | vertical | horizontal |
|---|---|---|
| 2.5 mm² | 6x75 | 6x75 |
| 4 mm² | 6x63 | 6x63 |
| 6 mm² | 6x47 | 6x47 |
| 10 mm² | 6x38 | 6x38 |
| 16 mm² | 6x32 | 6x32 |
| 35 mm² | 6x24 | 6x24 |

**Note**

The assembly with modular terminals gives consideration to a distance of 10 mm from the end of each mounting rail.
Order recommendations:
TS 35 mounting rail (screw terminal) WDU 2.5 1020000000 / (tension clamp terminal) ZDU 2.5 1608510000 / (tension clamp terminal) PDU 2.5 1896110000
TS 32 mounting rail (screw terminal) SAK 2.5 0279660000
TS 15 mounting rail (screw terminal) AKZ 2.5 0697160000

### Number of cable entries

| Number of cable entries | A / B | C / D |
|---|---|---|
| M12 | 70 | |
| M16 | 46 | |
| M20 | 40 | |
| M25 | 26 | |
| M32 | 14 | |
| M40 | 12 | |
| M50 | 5 | |
| M63 | 4 | |
| M75 | 3 | |

**Note** Our IP 68 brass cable glands are used as the reference for these guideline values.

**Note**

## Klippon® TBi QL 604022

**Depth** 220 mm

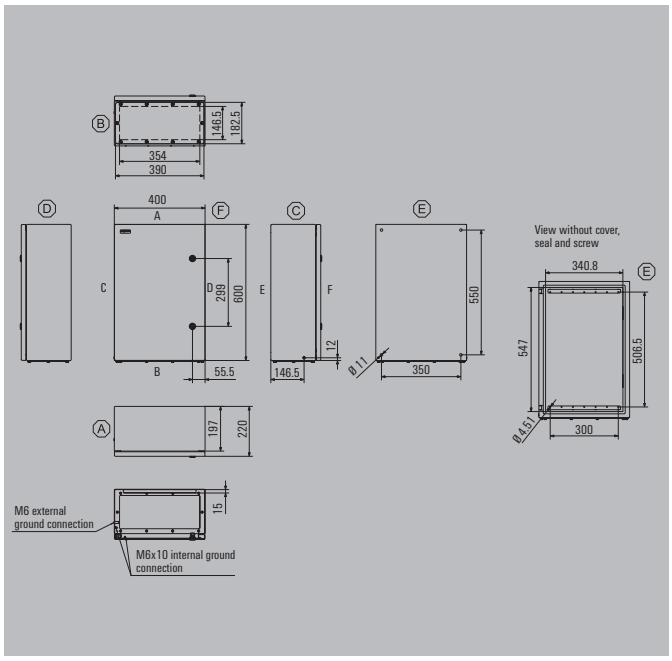


| Height/Width/Depth | 600 / 400 / 220 mm |
|---|---|

### Ordering data

| Stainless steel 1.4301 304, electropolished | Order No. |
|---|---|
| 0 gland plate | 1197590000 |
| 1 gland plate - bottom side (B) | 1197600000 |

**Note**

### Accessories

| Mounting plates and fastening screws | Order No. |
|---|---|
| Steel sheet, zinc plated | 1310460000 |
| Stainless steel 1.4301 | 1310370000 |
| Fastening screws for terminal rails | 1274150000 |
| **Stainless steel spacer M6 x 8, Set of 4** | |
| 10 mm length | 0935110000 |
| 15 mm length | 0935120000 |
| 20 mm length | 0935130000 |
| 30 mm length | 0935140000 |
| **Mild steel nickel plated Spacer M6 x 8, set of 2** | |
| 15 mm length | 3896100000 |
| 20 mm length | 3896200000 |
| 30 mm length | 3896300000 |
| **Mounting feet, set containing 4 pieces each** | |
| Stainless steel 1.4301 | 1289180000 |
| **Lock inserts** | |
| Double-bit | 1191590000 |
| Slot | 1191600000 |

### Max. number of terminals (industry)

| Max. number of terminals (industry) | vertical | horizontal |
|---|---|---|
| 2.5 mm² | 4x94 | 8x56 |
| 4 mm² | 4x79 | 8x47 |
| 6 mm² | 4x60 | 8x35 |
| 10 mm² | 4x48 | 8x28 |
| 16 mm² | 4x40 | 8x23 |
| 35 mm² | 4x30 | 8x18 |

**Note**

The assembly with modular terminals gives consideration to a distance of 10 mm from the end of each mounting rail.
Order recommendations:
TS 35 mounting rail (screw terminal) WDU 2.5 1020000000 / (tension clamp terminal) ZDU 2.5 1608510000 / (tension clamp terminal) PDU 2.5 1896110000
TS 32 mounting rail (screw terminal) SAK 2.5 0279660000
TS 15 mounting rail (screw terminal) AKZ 2.5 0697160000

### Number of cable entries

| Number of cable entries | A / B | C / D |
|---|---|---|
| M12 | 53 | |
| M16 | 36 | |
| M20 | 30 | |
| M25 | 20 | |
| M32 | 11 | |
| M40 | 9 | |
| M50 | 4 | |
| M63 | 3 | |
| M75 | 3 | |

**Note** Our IP 68 brass cable glands are used as the reference for these guideline values.

**Note**

## Klippon® TBi QL 606022

**Depth** 220 mm

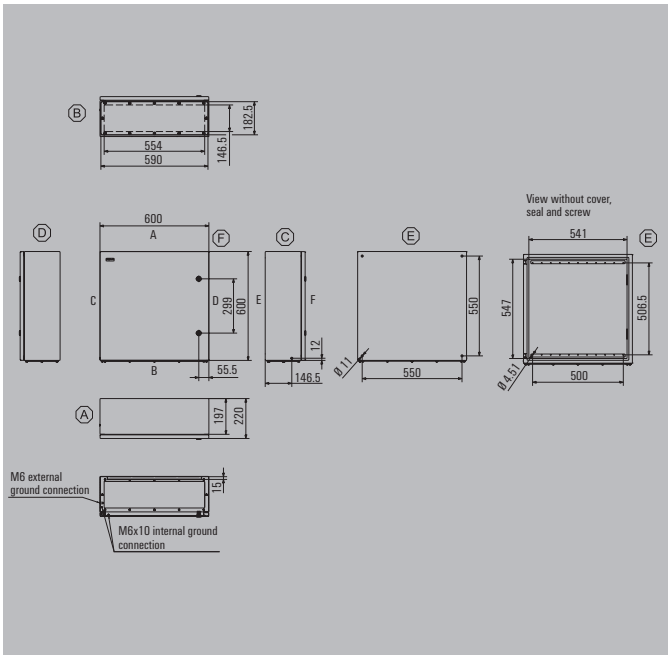


| Height/Width/Depth | 600 / 600 / 220 mm |
|---|---|

### Ordering data

| Stainless steel 1.4301 304, electropolished | Order No. |
|---|---|
| 0 gland plate | 1197610000 |
| 1 gland plate - bottom side (B) | 1197620000 |

**Note**

### Accessories

| Mounting plates and fastening screws | Order No. |
|---|---|
| Steel sheet, zinc plated | 1310470000 |
| Stainless steel 1.4301 | 1310380000 |
| Fastening screws for terminal rails | 1274150000 |
| **Stainless steel spacer M6 x 8, Set of 4** | |
| 10 mm length | 0935110000 |
| 15 mm length | 0935120000 |
| 20 mm length | 0935130000 |
| 30 mm length | 0935140000 |
| **Mild steel nickel plated Spacer M6 x 8, set of 2** | |
| 15 mm length | 3896100000 |
| 20 mm length | 3896200000 |
| 30 mm length | 3896300000 |
| **Mounting feet, set containing 4 pieces each** | |
| Stainless steel 1.4301 | 1289180000 |
| **Lock inserts** | |
| Double-bit | 1191590000 |
| Slot | 1191600000 |

### Max. number of terminals (industry)

| Max. number of terminals (industry) | vertical | horizontal |
|---|---|---|
| 2.5 mm² | 8x94 | 8x94 |
| 4 mm² | 8x79 | 8x79 |
| 6 mm² | 8x60 | 8x60 |
| 10 mm² | 8x48 | 8x48 |
| 16 mm² | 8x40 | 8x40 |
| 35 mm² | 8x30 | 8x30 |

**Note**

The assembly with modular terminals gives consideration to a distance of 10 mm from the end of each mounting rail.
Order recommendations:
TS 35 mounting rail (screw terminal) WDU 2.5 1020000000 / (tension clamp terminal) ZDU 2.5 1608510000 / (tension clamp terminal) PDU 2.5 1896110000
TS 32 mounting rail (screw terminal) SAK 2.5 0279660000
TS 15 mounting rail (screw terminal) AKZ 2.5 0697160000

### Number of cable entries

| Number of cable entries | A / B | C / D |
|---|---|---|
| M12 | 85 | |
| M16 | 58 | |
| M20 | 50 | |
| M25 | 32 | |
| M32 | 17 | |
| M40 | 14 | |
| M50 | 6 | |
| M63 | 5 | |
| M75 | 4 | |

**Note** Our IP 68 brass cable glands are used as the reference for these guideline values.

**Note**

## Klippon® TBi QL 806022

**Depth** 220 mm

| Height/Width/Depth | 800 / 600 / 220 mm |
|---|---|

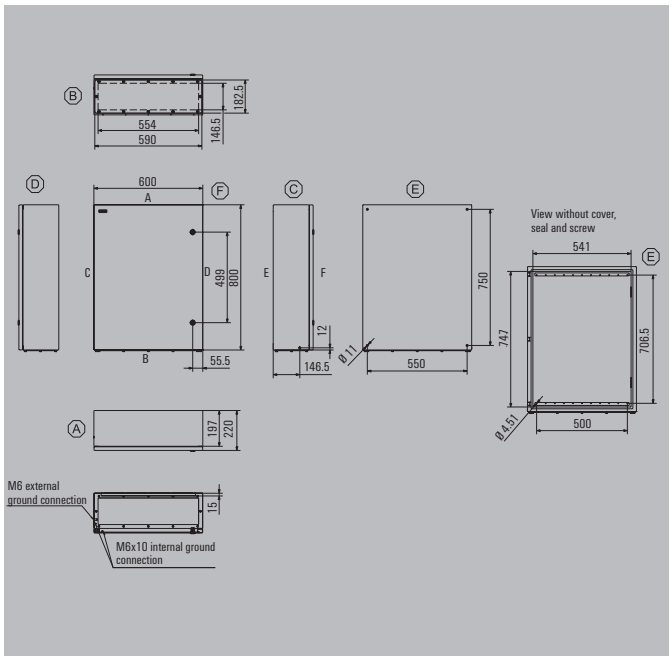


### Ordering data

| Stainless steel 1.4301 304, electropolished | Order No. |
|---|---|
| 0 gland plate | 1197630000 |
| 1 gland plate - bottom side (B) | 1197640000 |

**Note**

### Max. number of terminals (industry)

| Max. number of terminals (industry) | vertical | horizontal |
|---|---|---|
| 2.5 mm² | 8x133 | 11x94 |
| 4 mm² | 8x111 | 11x79 |
| 6 mm² | 8x84 | 11x60 |
| 10 mm² | 8x67 | 11x48 |
| 16 mm² | 8x56 | 11x40 |
| 35 mm² | 8x42 | 11x30 |

**Note**

The assembly with modular terminals gives consideration to a distance of 10 mm from the end of each mounting rail.
Order recommendations:
TS 35 mounting rail (screw terminal) WDU 2.5 1020000000 / (tension clamp terminal) ZDU 2.5 1608510000 / (tension clamp terminal) PDU 2.5 1896110000
TS 32 mounting rail (screw terminal) SAK 2.5 0279660000
TS 15 mounting rail (screw terminal) AKZ 2.5 0697160000

### Accessories

| Mounting plates and fastening screws | Order No. |
|---|---|
| Steel sheet, zinc plated | 1310480000 |
| Stainless steel 1.4301 | 1310390000 |
| Fastening screws for terminal rails | 1274150000 |
| **Stainless steel spacer M6 x 8, Set of 4** | |
| 10 mm length | 0935110000 |
| 15 mm length | 0935120000 |
| 20 mm length | 0935130000 |
| 30 mm length | 0935140000 |
| **Mild steel nickel plated Spacer M6 x 8, set of 2** | |
| 15 mm length | 3896100000 |
| 20 mm length | 3896200000 |
| 30 mm length | 3896300000 |
| **Mounting feet, set containing 4 pieces each** | |
| Stainless steel 1.4301 | 1289180000 |
| **Lock inserts** | |
| Double-bit | 1191590000 |
| Slot | 1191600000 |

### Number of cable entries

| Number of cable entries | A / B | C / D |
|---|---|---|
| M12 | 85 | |
| M16 | 58 | |
| M20 | 50 | |
| M25 | 32 | |
| M32 | 17 | |
| M40 | 14 | |
| M50 | 6 | |
| M63 | 5 | |
| M75 | 4 | |

**Note** Our IP 68 brass cable glands are used as the reference for these guideline values.

**Note**

# Klippon® TBi FS – Fixing Screw

**Stainless steel enclosures**
**for use within harsh industrial environments**

Even under moderate environmental conditions, there is an increasing need for complex, individual automated solutions. A harsh industrial environment places additional, heavy demands on applications and determines the design of the industrial enclosures to meet these demands. With complete protection and excellent durability, our Klippon® TBi stainless steel enclosures offer the best protection for the components inside them. Its electro-polished surface makes the enclosure extraordinarily resistant to corrosion.

- Available in 11 sizes and 2 depths
- Operating temperature range -40 °C to +85 °C
- Impact resistance of 10 J Industrial application
- Dedicated internal mounting support bracket for fixing terminal rail or mounting plates with self forming screws
- External earth point – suitable for M6 threaded screw
- Concealed hinges
- Internal earth stud – M6 screw fitted to enclosure lid and base
- Supplied in 0 or 1 gland plate version
- Direct mounting of the enclosure by means of rear mounting holes
- Mounting feet in stainless steel are optionally available, can be rotated by 90°
- Moisture and dust channel
- Double-bit locking system

Our assembly service can supply these enclosure preassembled with terminals and cable glands according to customer requirements.

NEW

c UL us LISTED

## Overview of enclosures

### Ordering data

| Description | Height x width x depth in mm | 0 Gland Plate | 1 Gland Plate (below) |
|---|---|---|---|
| KTBi FS 302015 S2E_* | 300 x 200 x 150 | 1197200000 | 1197210000 |
| KTBi FS 303015 S2E_* | 300 x 300 x 150 | 1197220000 | 1197230000 |
| KTBi FS 303022 S2E_* | 300 x 300 x 220 | 1197240000 | 1197250000 |
| KTBi FS 403015 S2E_* | 400 x 300 x 150 | 1197260000 | 1197270000 |
| KTBi FS 403022 S2E_* | 400 x 300 x 220 | 1197280000 | 1197290000 |
| KTBi FS 404022 S2E_* | 400 x 400 x 220 | 1197300000 | 1197310000 |
| KTBi FS 504022 S2E_* | 500 x 400 x 220 | 1197320000 | 1197330000 |
| KTBi FS 505022 S2E_* | 500 x 500 x 220 | 1197340000 | 1197350000 |
| KTBi FS 604022 S2E_* | 600 x 400 x 220 | 1197360000 | 1197370000 |
| KTBi FS 606022 S2E_* | 600 x 600 x 220 | 1197380000 | 1197390000 |
| KTBi FS 806022 S2E_* | 800 x 600 x 220 | 1197400000 | 1197410000 |
| **Note** | *Placeholder for the number of gland plates (0 or 1) | | |

## Technical Overview

### Features

- Available in 11 sizes and 2 standard depths
- Welded mounting bracket for securing the mounting plate or mounting rail by means of self-tapping screws
- External earth - M6 earth tab rivet
- M6 earthing bolt welded in the cover and base of the enclosure
- Available with 0 or 1 flange plates
- Optimised laser welding, high quality standard
- Direct mounting of the enclosures with rear mounting holes
- Mounting feet in stainless steel are optionally available, and can be rotated by 90°
- Permanent labelling of items
- Packaging optimally designed for enclosure

**Note**

### Technical data

| | |
|---|---|
| Material | Stainless steel 1.4301 (304) 1.5 mm |
| Surface | Electroplished |
| IP protection class | IP 66 |
| NEMA Rating | 3, 4x, 5 |
| Gland plates | 1.5 mm thick stainless steel 1.4301 (304) flange plates, mounted with M6 screws, spanner size 10 mm |
| Earthing inside | Welded-on M6 stainless-steel earth stud in enclosure lid and base |
| Earthing outside | M6 earth tab rivet |
| Installation mounting | Welded mounting bracket for flexible mounting of the mounting plate, rails or TAS 20 rails.<br>They contain 4.51 mm drill holes for accommodating the mounting plate or TS/TAS by means of self-tapping screws (1274150000) |
| Enclosure attachment | Direct mounting (11 mm mounting holes on rear wall) or via mounting feet (optionally available), adjustable by 90° |
| Lid opening | Fully removable lid |
| Lid fixing | M6 hexagon head slotted screws SW10 without hinge |
| Impact resistance | 10J |
| Gasket material | Neoprene - CR |
| Operating temperature range | -40 °C ... +85 °C |
| Tightening torque screws of lid and gland plates* | 2.5 Nm |
| **Note** | *Please use our hexagon screwdriver with 10 mm size (9009070000) |

### Approvals for empty enclosures

| | |
|---|---|
| DIN EN 62208 | Empty enclosure standard |
| Germanischer Lloyd | 20 593 - 11 HH |
| cULus | E256877 |
| **Note** | |

## Klippon® TBi FS 302015

**Depth** 150 mm

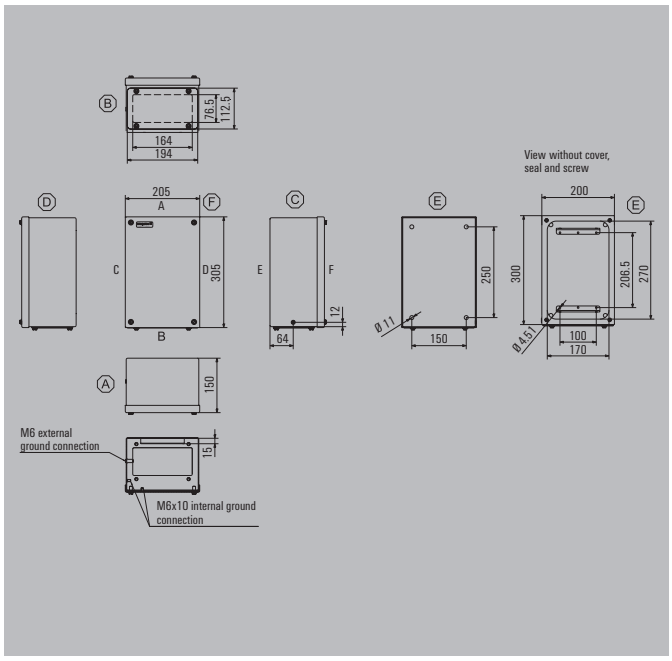


| | |
|---|---|
| Height/Width/Depth | 300 / 200 / 150 mm |

### Ordering data

| Stainless steel 1.4301 304, electropolished | Order No. |
|---|---|
| 0 gland plate | 1197200000 |
| 1 gland plate - bottom side (B) | 1197210000 |

**Note**

### Accessories

| Mounting plates and fastening screws | Order No. |
|---|---|
| Steel sheet, zinc plated | 1309690000 |
| Stainless steel 1.4301 | 1309700000 |
| Fastening screws for terminal rails | 1274150000 |
| **Stainless steel spacer M6 x 8, Set of 4** | |
| 10 mm length | 0935110000 |
| 15 mm length | 0935120000 |
| 20 mm length | 0935130000 |
| 30 mm length | 0935140000 |
| **Mild steel nickel plated Spacer M6 x 8, set of 2** | |
| 15 mm length | 3896100000 |
| 20 mm length | 3896200000 |
| 30 mm length | 3896300000 |
| **Mounting feet, set containing 4 pieces each** | |
| Stainless steel 1.4301 | 1289180000 |

### Max. number of terminals (industry)

| Max. number of terminals (industry) | vertical | horizontal |
|---|---|---|
| 2.5 mm² | 1x36 | 3x17 |
| 4 mm² | 1x30 | 3x14 |
| 6 mm² | 1x23 | 3x11 |
| 10 mm² | 1x18 | 3x9 |
| 16 mm² | 1x15 | 3x7 |
| 35 mm² | 1x11 | 3x5 |

**Note**

The assembly with modular terminals gives consideration to a distance of 10 mm from the end of each mounting rail.
Order recommendations:
TS 35 mounting rail (screw terminal) WDU 2.5 1020000000 / (tension clamp terminal) ZDU 2.5 1608510000 / (tension clamp terminal) PDU 2.5 1896110000
TS 32 mounting rail (screw terminal) SAK 2.5 0279660000
TS 15 mounting rail (screw terminal) AKZ 2.5 0697160000

### Number of cable entries

| Number of cable entries | A / B | C / D |
|---|---|---|
| M12 | 14 | |
| M16 | 7 | |
| M20 | 6 | |
| M25 | 3 | |
| M32 | 2 | |
| M40 | 2 | |
| M50 | 1 | |
| M63 | | |
| M75 | | |

**Note** Our IP 68 brass cable glands are used as the reference for these guideline values.

**Note**

## Klippon® TBi FS 303015

**Depth** **150 mm**

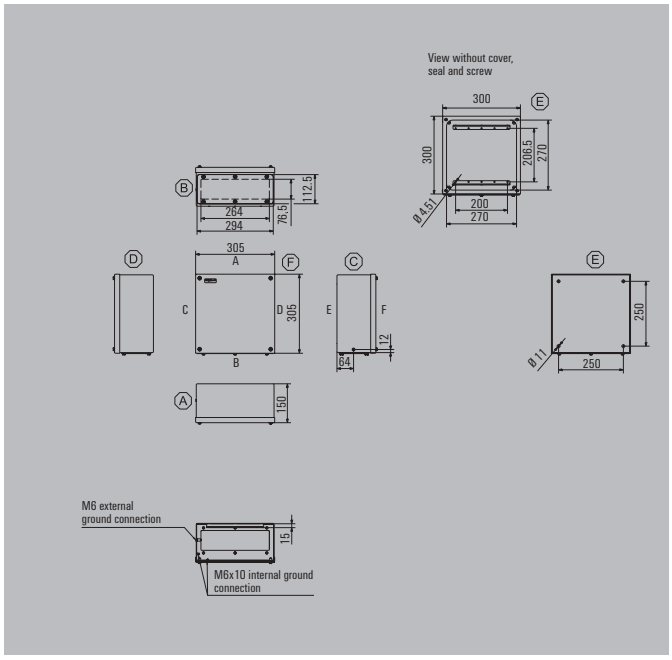


| Height/Width/Depth | 300 / 300 / 150 mm |
|---|---|

### Ordering data

| Stainless steel 1.4301 304, electropolished | Order No. |
|---|---|
| 0 gland plate | 1197220000 |
| 1 gland plate - bottom side (B) | 1197230000 |

**Note**

### Accessories

| Mounting plates and fastening screws | Order No. |
|---|---|
| Steel sheet, zinc plated | 1310410000 |
| Stainless steel 1.4301 | 1310320000 |
| Fastening screws for terminal rails | 1274150000 |
| **Stainless steel spacer M6 x 8, Set of 4** | |
| 10 mm length | 0935110000 |
| 15 mm length | 0935120000 |
| 20 mm length | 0935130000 |
| 30 mm length | 0935140000 |
| **Mild steel nickel plated Spacer M6 x 8, set of 2** | |
| 15 mm length | 3896100000 |
| 20 mm length | 3896200000 |
| 30 mm length | 3896300000 |
| **Mounting feet, set containing 4 pieces each** | |
| Stainless steel 1.4301 | 1289180000 |

### Max. number of terminals (industry)

| Max. number of terminals (industry) | vertical | horizontal |
|---|---|---|
| 2.5 mm² | 3x36 | 3x36 |
| 4 mm² | 3x30 | 3x30 |
| 6 mm² | 3x23 | 3x23 |
| 10 mm² | 3x18 | 3x18 |
| 16 mm² | 3x15 | 3x15 |
| 35 mm² | 3x11 | 3x11 |

**Note**

The assembly with modular terminals gives consideration to a distance of 10 mm from the end of each mounting rail.
Order recommendations:
TS 35 mounting rail (screw terminal) WDU 2.5 1020000000 / (tension clamp terminal) ZDU 2.5 1608510000 / (tension clamp terminal) PDU 2.5 1896110000
TS 32 mounting rail (screw terminal) SAK 2.5 0279660000
TS 15 mounting rail (screw terminal) AKZ 2.5 0697160000

### Number of cable entries

| Number of cable entries | A / B | C / D |
|---|---|---|
| M12 | 23 | |
| M16 | 13 | |
| M20 | 11 | |
| M25 | 5 | |
| M32 | 4 | |
| M40 | 3 | |
| M50 | 3 | |
| M63 | | |
| M75 | | |

**Note** Our IP 68 brass cable glands are used as the reference for these guideline values.

**Note**

## Klippon® TBi FS 303022

**Depth** 220 mm

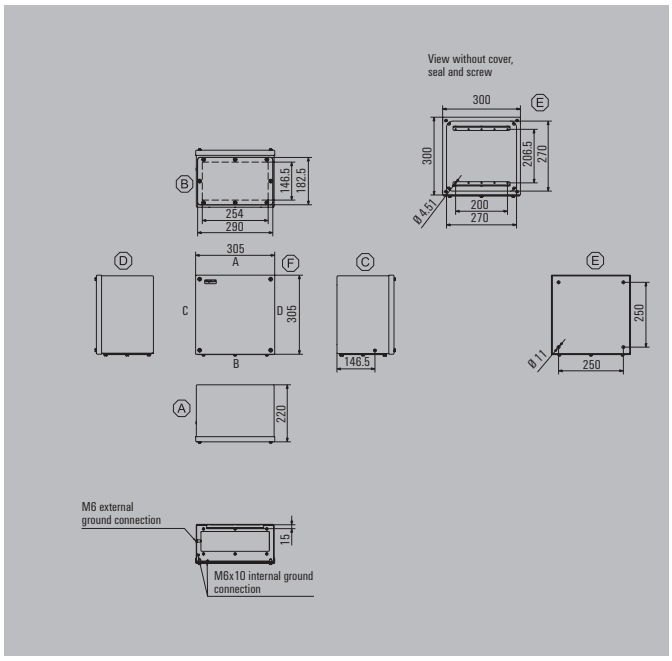


| Height/Width/Depth | 300 / 300 / 220 mm |
|---|---|

### Ordering data

| Stainless steel 1.4301 304, electropolished | Order No. |
|---|---|
| 0 gland plate | 1197240000 |
| 1 gland plate - bottom side (B) | 1197250000 |

**Note**

### Accessories

| Mounting plates and fastening screws | Order No. |
|---|---|
| Steel sheet, zinc plated | 1310410000 |
| Stainless steel 1.4301 | 1310320000 |
| Fastening screws for terminal rails | 1274150000 |
| **Stainless steel spacer M6 x 8, Set of 4** | |
| 10 mm length | 0935110000 |
| 15 mm length | 0935120000 |
| 20 mm length | 0935130000 |
| 30 mm length | 0935140000 |
| **Mild steel nickel plated Spacer M6 x 8, set of 2** | |
| 15 mm length | 3896100000 |
| 20 mm length | 3896200000 |
| 30 mm length | 3896300000 |
| **Mounting feet, set containing 4 pieces each** | |
| Stainless steel 1.4301 | 1289180000 |

### Max. number of terminals (industry)

| Max. number of terminals (industry) | vertical | horizontal |
|---|---|---|
| 2.5 mm² | 3x36 | 3x36 |
| 4 mm² | 3x30 | 3x30 |
| 6 mm² | 3x23 | 3x23 |
| 10 mm² | 3x18 | 3x18 |
| 16 mm² | 3x15 | 3x15 |
| 35 mm² | 3x11 | 3x11 |

**Note**

The assembly with modular terminals gives consideration to a distance of 10 mm from the end of each mounting rail.
Order recommendations:
TS 35 mounting rail (screw terminal) WDU 2.5 1020000000 / (tension clamp terminal) ZDU 2.5 1608510000 / (tension clamp terminal) PDU 2.5 1896110000
TS 32 mounting rail (screw terminal) SAK 2.5 0279660000
TS 15 mounting rail (screw terminal) AKZ 2.5 0697160000

### Number of cable entries

| Number of cable entries | A / B | C / D |
|---|---|---|
| M12 | 38 | |
| M16 | 26 | |
| M20 | 22 | |
| M25 | 14 | |
| M32 | 7 | |
| M40 | 6 | |
| M50 | 3 | |
| M63 | 2 | |
| M75 | 2 | |

**Note** Our IP 68 brass cable glands are used as the reference for these guideline values.

**Note**

## Klippon® TBi FS 403015

**Depth** 150 mm

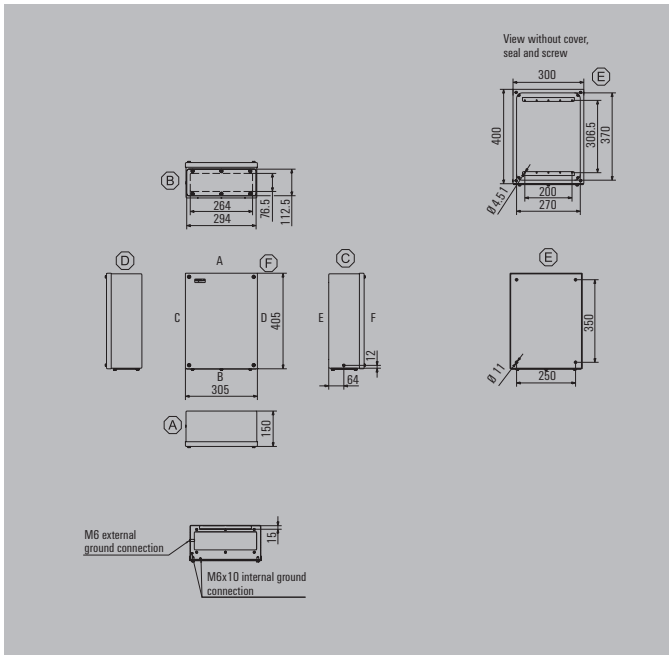


| | |
|---|---|
| Height/Width/Depth | 400 / 300 / 150 mm |

### Ordering data

| Stainless steel 1.4301 304, electropolished | Order No. |
|---|---|
| 0 gland plate | 1197260000 |
| 1 gland plate - bottom side (B) | 1197270000 |

**Note**

### Accessories

| Mounting plates and fastening screws | Order No. |
|---|---|
| Steel sheet, zinc plated | 1310420000 |
| Stainless steel 1.4301 | 1310330000 |
| Fastening screws for terminal rails | 1274150000 |
| **Stainless steel spacer M6 x 8, Set of 4** | |
| 10 mm length | 0935110000 |
| 15 mm length | 0935120000 |
| 20 mm length | 0935130000 |
| 30 mm length | 0935140000 |
| **Mild steel nickel plated Spacer M6 x 8, set of 2** | |
| 15 mm length | 3896100000 |
| 20 mm length | 3896200000 |
| 30 mm length | 3896300000 |
| **Mounting feet, set containing 4 pieces each** | |
| Stainless steel 1.4301 | 1289180000 |

### Max. number of terminals (industry)

| Max. number of terminals (industry) | vertical | horizontal |
|---|---|---|
| 2.5 mm² | 3x56 | 4x36 |
| 4 mm² | 3x47 | 4x30 |
| 6 mm² | 3x35 | 4x23 |
| 10 mm² | 3x28 | 4x18 |
| 16 mm² | 3x23 | 4x15 |
| 35 mm² | 3x18 | 4x11 |

**Note**

The assembly with modular terminals gives consideration to a distance of 10 mm from the end of each mounting rail.
Order recommendations:
TS 35 mounting rail (screw terminal) WDU 2.5 1020000000 / (tension clamp terminal) ZDU 2.5 1608510000 / (tension clamp terminal) PDU 2.5 1896110000
TS 32 mounting rail (screw terminal) SAK 2.5 0279660000
TS 15 mounting rail (screw terminal) AKZ 2.5 0697160000

### Number of cable entries

| Number of cable entries | A / B | C / D |
|---|---|---|
| M12 | 23 | |
| M16 | 13 | |
| M20 | 11 | |
| M25 | 5 | |
| M32 | 4 | |
| M40 | 3 | |
| M50 | 3 | |
| M63 | | |
| M75 | | |

**Note** Our IP 68 brass cable glands are used as the reference for these guideline values.

**Note**

## Klippon® TBi FS 403022

**Depth** 220 mm

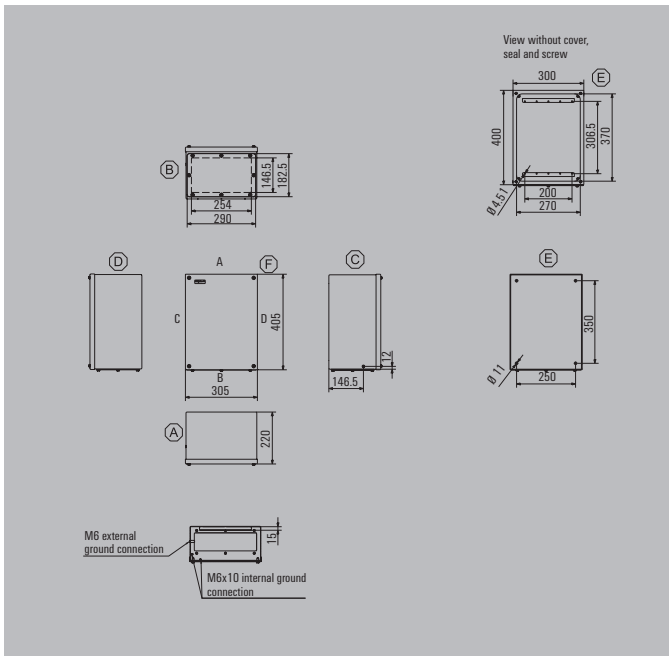


| Height/Width/Depth | 400 / 300 / 220 mm |
|---|---|

### Ordering data

| Stainless steel 1.4301 304, electropolished | Order No. |
|---|---|
| 0 gland plate | 1197280000 |
| 1 gland plate - bottom side (B) | 1197290000 |

**Note**

### Accessories

| Mounting plates and fastening screws | Order No. |
|---|---|
| Steel sheet, zinc plated | 1310420000 |
| Stainless steel 1.4301 | 1310330000 |
| Fastening screws for terminal rails | 1274150000 |
| **Stainless steel spacer M6 x 8, Set of 4** | |
| 10 mm length | 0935110000 |
| 15 mm length | 0935120000 |
| 20 mm length | 0935130000 |
| 30 mm length | 0935140000 |
| **Mild steel nickel plated Spacer M6 x 8, set of 2** | |
| 15 mm length | 3896100000 |
| 20 mm length | 3896200000 |
| 30 mm length | 3896300000 |
| **Mounting feet, set containing 4 pieces each** | |
| Stainless steel 1.4301 | 1289180000 |

### Max. number of terminals (industry)

| Max. number of terminals (industry) | vertical | horizontal |
|---|---|---|
| 2.5 mm² | 3x56 | 4x36 |
| 4 mm² | 3x47 | 4x30 |
| 6 mm² | 3x35 | 4x23 |
| 10 mm² | 3x28 | 4x18 |
| 16 mm² | 3x23 | 4x15 |
| 35 mm² | 3x18 | 4x11 |

**Note**

The assembly with modular terminals gives consideration to a distance of 10 mm from the end of each mounting rail.
Order recommendations:
TS 35 mounting rail (screw terminal) WDU 2.5 1020000000 / (tension clamp terminal) ZDU 2.5 1608510000 / (tension clamp terminal) PDU 2.5 1896110000
TS 32 mounting rail (screw terminal) SAK 2.5 0279660000
TS 15 mounting rail (screw terminal) AKZ 2.5 0697160000

### Number of cable entries

| Number of cable entries | A / B | C / D |
|---|---|---|
| M12 | 38 | |
| M16 | 26 | |
| M20 | 22 | |
| M25 | 14 | |
| M32 | 7 | |
| M40 | 6 | |
| M50 | 3 | |
| M63 | 2 | |
| M75 | 2 | |

**Note** Our IP 68 brass cable glands are used as the reference for these guideline values.

**Note**

## Klippon® TBi FS 404022

**Depth** **220 mm**

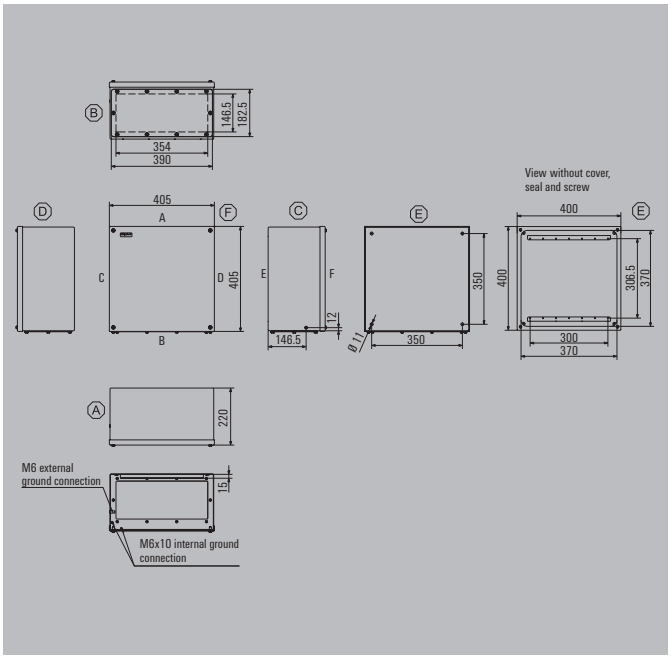


| Height/Width/Depth | 400 / 400 / 220 mm |
|---|---|

### Ordering data

| Stainless steel 1.4301 304, electropolished | Order No. |
|---|---|
| 0 gland plate | 1197300000 |
| 1 gland plate - bottom side (B) | 1197310000 |

**Note**

### Accessories

| Mounting plates and fastening screws | Order No. |
|---|---|
| Steel sheet, zinc plated | 1310430000 |
| Stainless steel 1.4301 | 1310340000 |
| Fastening screws for terminal rails | 1274150000 |
| **Stainless steel spacer M6 x 8, Set of 4** | |
| 10 mm length | 0935110000 |
| 15 mm length | 0935120000 |
| 20 mm length | 0935130000 |
| 30 mm length | 0935140000 |
| **Mild steel nickel plated Spacer M6 x 8, set of 2** | |
| 15 mm length | 3896100000 |
| 20 mm length | 3896200000 |
| 30 mm length | 3896300000 |
| **Mounting feet, set containing 4 pieces each** | |
| Stainless steel 1.4301 | 1289180000 |

### Max. number of terminals (industry)

| Max. number of terminals (industry) | vertical | horizontal |
|---|---|---|
| 2.5 mm² | 4x56 | 4x56 |
| 4 mm² | 4x47 | 4x47 |
| 6 mm² | 4x35 | 4x35 |
| 10 mm² | 4x28 | 4x28 |
| 16 mm² | 4x23 | 4x23 |
| 35 mm² | 4x18 | 4x18 |

**Note**

The assembly with modular terminals gives consideration to a distance of 10 mm from the end of each mounting rail.
Order recommendations:
TS 35 mounting rail (screw terminal) WDU 2.5 1020000000 / (tension clamp terminal) ZDU 2.5 1608510000 / (tension clamp terminal) PDU 2.5 1896110000
TS 32 mounting rail (screw terminal) SAK 2.5 0279660000
TS 15 mounting rail (screw terminal) AKZ 2.5 0697160000

### Number of cable entries

| Number of cable entries | A / B | C / D |
|---|---|---|
| M12 | 53 | |
| M16 | 36 | |
| M20 | 30 | |
| M25 | 20 | |
| M32 | 11 | |
| M40 | 9 | |
| M50 | 4 | |
| M63 | 3 | |
| M75 | 3 | |

**Note** Our IP 68 brass cable glands are used as the reference for these guideline values.

**Note**

## Klippon® TBi FS 504022

**Depth** 220 mm

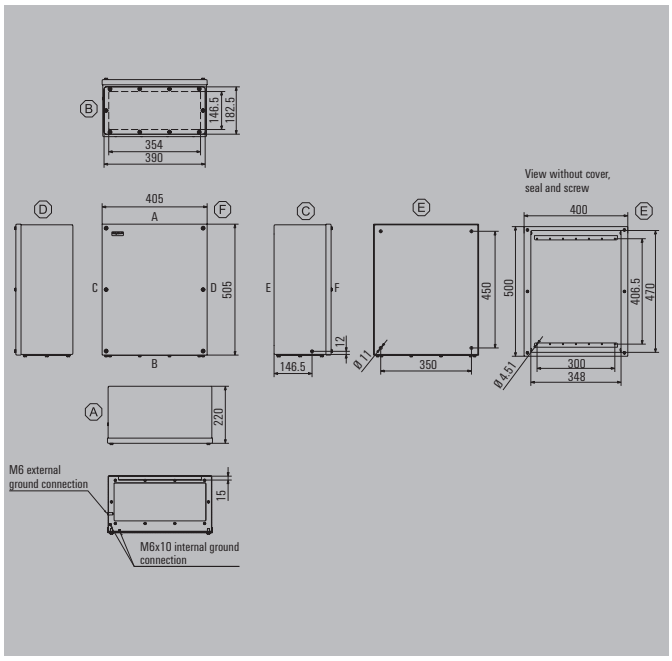


| | |
|---|---|
| Height/Width/Depth | 500 / 400 / 220 mm |

### Ordering data

| Stainless steel 1.4301 304, electropolished | Order No. |
|---|---|
| 0 gland plate | 1197320000 |
| 1 gland plate - bottom side (B) | 1197330000 |

**Note**

### Accessories

| Mounting plates and fastening screws | Order No. |
|---|---|
| Steel sheet, zinc plated | 1310440000 |
| Stainless steel 1.4301 | 1310350000 |
| Fastening screws for terminal rails | 1274150000 |
| **Stainless steel spacer M6 x 8, Set of 4** | |
| 10 mm length | 0935110000 |
| 15 mm length | 0935120000 |
| 20 mm length | 0935130000 |
| 30 mm length | 0935140000 |
| **Mild steel nickel plated Spacer M6 x 8, set of 2** | |
| 15 mm length | 3896100000 |
| 20 mm length | 3896200000 |
| 30 mm length | 3896300000 |
| **Mounting feet, set containing 4 pieces each** | |
| Stainless steel 1.4301 | 1289180000 |

### Max. number of terminals (industry)

| Max. number of terminals (industry) | vertical | horizontal |
|---|---|---|
| 2.5 mm² | 4x75 | 6x56 |
| 4 mm² | 4x63 | 6x47 |
| 6 mm² | 4x47 | 6x35 |
| 10 mm² | 4x38 | 6x28 |
| 16 mm² | 4x32 | 6x23 |
| 35 mm² | 4x24 | 6x18 |

**Note**

The assembly with modular terminals gives consideration to a distance of 10 mm from the end of each mounting rail.
Order recommendations:
TS 35 mounting rail (screw terminal) WDU 2.5 1020000000 / (tension clamp terminal) ZDU 2.5 1608510000 / (tension clamp terminal) PDU 2.5 1896110000
TS 32 mounting rail (screw terminal) SAK 2.5 0279660000
TS 15 mounting rail (screw terminal) AKZ 2.5 0697160000

### Number of cable entries

| Number of cable entries | A / B | C / D |
|---|---|---|
| M12 | 53 | |
| M16 | 36 | |
| M20 | 30 | |
| M25 | 20 | |
| M32 | 11 | |
| M40 | 9 | |
| M50 | 4 | |
| M63 | 3 | |
| M75 | 3 | |

**Note** Our IP 68 brass cable glands are used as the reference for these guideline values.

**Note**

## Klippon® TBi FS 505022

**Depth** 220 mm

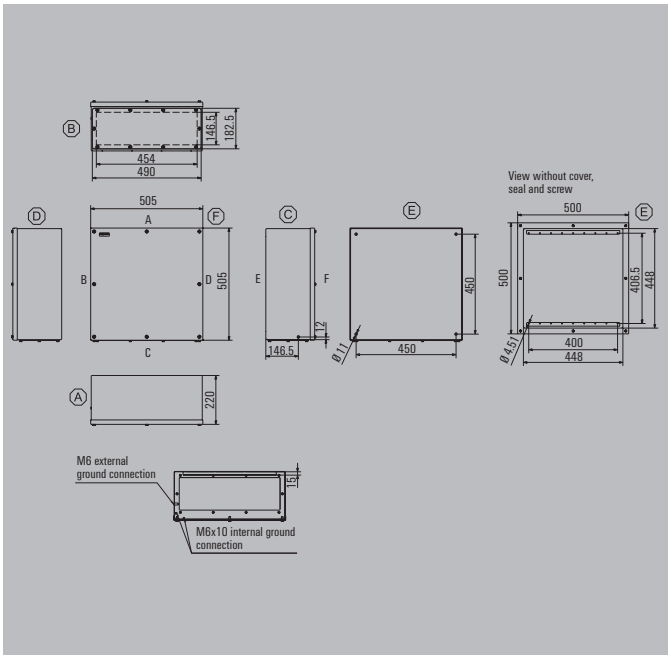


| Height/Width/Depth | 500 / 500 / 220 mm |
|---|---|

### Ordering data

| Stainless steel 1.4301 304, electropolished | Order No. |
|---|---|
| 0 gland plate | 1197340000 |
| 1 gland plate - bottom side (B) | 1197350000 |

**Note**

### Accessories

| Mounting plates and fastening screws | Order No. |
|---|---|
| Steel sheet, zinc plated | 1310450000 |
| Stainless steel 1.4301 | 1310360000 |
| Fastening screws for terminal rails | 1274150000 |
| **Stainless steel spacer M6 x 8, Set of 4** | |
| 10 mm length | 0935110000 |
| 15 mm length | 0935120000 |
| 20 mm length | 0935130000 |
| 30 mm length | 0935140000 |
| **Mild steel nickel plated Spacer M6 x 8, set of 2** | |
| 15 mm length | 3896100000 |
| 20 mm length | 3896200000 |
| 30 mm length | 3896300000 |
| **Mounting feet, set containing 4 pieces each** | |
| Stainless steel 1.4301 | 1289180000 |

### Max. number of terminals (industry)

| Max. number of terminals (industry) | vertical | horizontal |
|---|---|---|
| 2.5 mm² | 6x75 | 6x75 |
| 4 mm² | 6x63 | 6x63 |
| 6 mm² | 6x47 | 6x47 |
| 10 mm² | 6x38 | 6x38 |
| 16 mm² | 6x32 | 6x32 |
| 35 mm² | 6x24 | 6x24 |

**Note**

The assembly with modular terminals gives consideration to a distance of 10 mm from the end of each mounting rail.
Order recommendations:
TS 35 mounting rail (screw terminal) WDU 2.5 1020000000 / (tension clamp terminal) ZDU 2.5 1608510000 / (tension clamp terminal) PDU 2.5 1896110000
TS 32 mounting rail (screw terminal) SAK 2.5 0279660000
TS 15 mounting rail (screw terminal) AKZ 2.5 0697160000

### Number of cable entries

| Number of cable entries | A / B | C / D |
|---|---|---|
| M12 | 70 | |
| M16 | 46 | |
| M20 | 40 | |
| M25 | 26 | |
| M32 | 14 | |
| M40 | 12 | |
| M50 | 5 | |
| M63 | 4 | |
| M75 | 3 | |

**Note** Our IP 68 brass cable glands are used as the reference for these guideline values.

**Note**

## Klippon® TBi FS 604022

**Depth** 220 mm

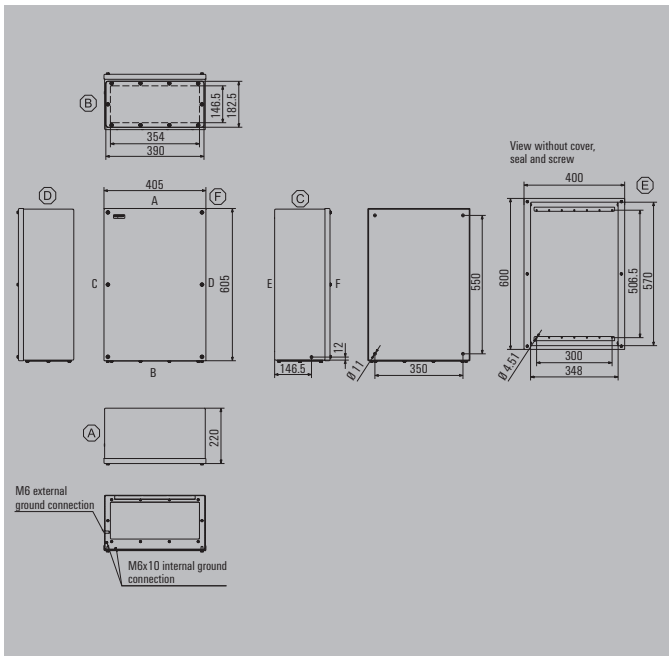


| | |
|---|---|
| Height/Width/Depth | 600 / 400 / 220 mm |

### Ordering data

| Stainless steel 1.4301 304, electropolished | Order No. |
|---|---|
| 0 gland plate | 1197360000 |
| 1 gland plate - bottom side (B) | 1197370000 |

**Note**

### Accessories

| Mounting plates and fastening screws | Order No. |
|---|---|
| Steel sheet, zinc plated | 1310460000 |
| Stainless steel 1.4301 | 1310370000 |
| Fastening screws for terminal rails | 1274150000 |
| **Stainless steel spacer M6 x 8, Set of 4** | |
| 10 mm length | 0935110000 |
| 15 mm length | 0935120000 |
| 20 mm length | 0935130000 |
| 30 mm length | 0935140000 |
| **Mild steel nickel plated Spacer M6 x 8, set of 2** | |
| 15 mm length | 3896100000 |
| 20 mm length | 3896200000 |
| 30 mm length | 3896300000 |
| **Mounting feet, set containing 4 pieces each** | |
| Stainless steel 1.4301 | 1289180000 |

### Max. number of terminals (industry)

| Max. number of terminals (industry) | vertical | horizontal |
|---|---|---|
| 2.5 mm² | 4x94 | 8x56 |
| 4 mm² | 4x79 | 8x47 |
| 6 mm² | 4x60 | 8x35 |
| 10 mm² | 4x48 | 8x28 |
| 16 mm² | 4x40 | 8x23 |
| 35 mm² | 4x30 | 8x18 |

**Note**

The assembly with modular terminals gives consideration to a distance of 10 mm from the end of each mounting rail.
Order recommendations:
TS 35 mounting rail (screw terminal) WDU 2.5 1020000000 / (tension clamp terminal) ZDU 2.5 1608510000 / (tension clamp terminal) PDU 2.5 1896110000
TS 32 mounting rail (screw terminal) SAK 2.5 0279660000
TS 15 mounting rail (screw terminal) AKZ 2.5 0697160000

### Number of cable entries

| Number of cable entries | A / B | C / D |
|---|---|---|
| M12 | 53 | |
| M16 | 36 | |
| M20 | 30 | |
| M25 | 20 | |
| M32 | 11 | |
| M40 | 9 | |
| M50 | 4 | |
| M63 | 3 | |
| M75 | 3 | |

**Note** Our IP 68 brass cable glands are used as the reference for these guideline values.

**Note**

## Klippon® TBi FS 606022

**Depth** 220 mm

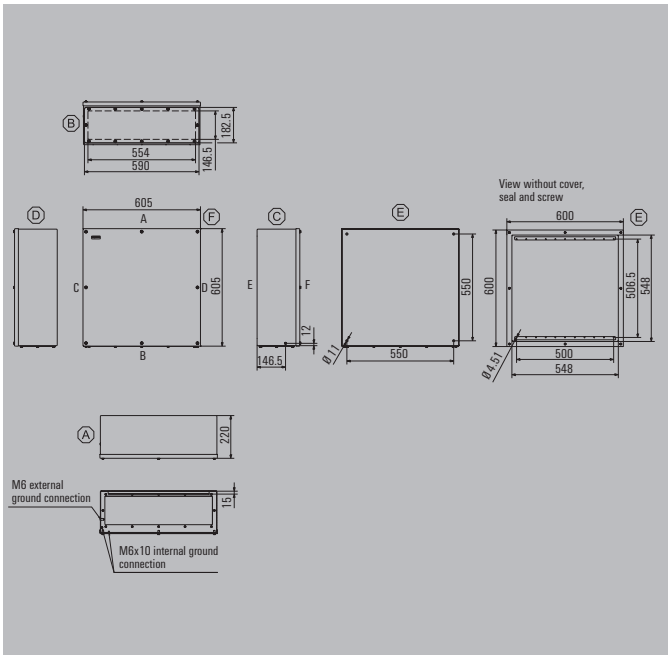


| Height/Width/Depth | 600 / 600 / 220 mm |
|---|---|

### Ordering data

| Stainless steel 1.4301 304, electropolished | Order No. |
|---|---|
| 0 gland plate | 1197380000 |
| 1 gland plate - bottom side (B) | 1197390000 |

**Note**

### Accessories

| Mounting plates and fastening screws | Order No. |
|---|---|
| Steel sheet, zinc plated | 1310470000 |
| Stainless steel 1.4301 | 1310380000 |
| Fastening screws for terminal rails | 1274150000 |
| **Stainless steel spacer M6 x 8, Set of 4** | |
| 10 mm length | 0935110000 |
| 15 mm length | 0935120000 |
| 20 mm length | 0935130000 |
| 30 mm length | 0935140000 |
| **Mild steel nickel plated Spacer M6 x 8, set of 2** | |
| 15 mm length | 3896100000 |
| 20 mm length | 3896200000 |
| 30 mm length | 3896300000 |
| **Mounting feet, set containing 4 pieces each** | |
| Stainless steel 1.4301 | 1289180000 |

### Max. number of terminals (industry)

| Max. number of terminals (industry) | vertical | horizontal |
|---|---|---|
| 2.5 mm² | 8x94 | 8x94 |
| 4 mm² | 8x79 | 8x79 |
| 6 mm² | 8x60 | 8x60 |
| 10 mm² | 8x48 | 8x48 |
| 16 mm² | 8x40 | 8x40 |
| 35 mm² | 8x30 | 8x30 |

**Note**

The assembly with modular terminals gives consideration to a distance of 10 mm from the end of each mounting rail.
Order recommendations:
TS 35 mounting rail (screw terminal) WDU 2.5 1020000000 / (tension clamp terminal) ZDU 2.5 1608510000 / (tension clamp terminal) PDU 2.5 1896110000
TS 32 mounting rail (screw terminal) SAK 2.5 0279660000
TS 15 mounting rail (screw terminal) AKZ 2.5 0697160000

### Number of cable entries

| Number of cable entries | A / B | C / D |
|---|---|---|
| M12 | 85 | |
| M16 | 58 | |
| M20 | 50 | |
| M25 | 32 | |
| M32 | 17 | |
| M40 | 14 | |
| M50 | 6 | |
| M63 | 5 | |
| M75 | 4 | |

**Note** Our IP 68 brass cable glands are used as the reference for these guideline values.

**Note**

## Klippon® TBi FS 806022

**Depth** 220 mm

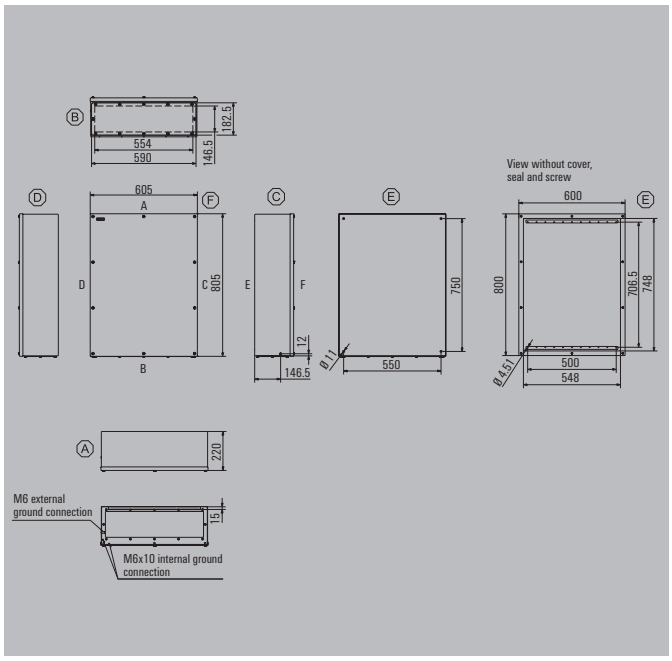


| | |
|---|---|
| Height/Width/Depth | 800 / 600 / 220 mm |

### Ordering data

| Stainless steel 1.4301 304, electropolished | Order No. |
|---|---|
| 0 gland plate | 1197400000 |
| 1 gland plate - bottom side (B) | 1197410000 |

**Note**

### Max. number of terminals (industry)

| Max. number of terminals (industry) | vertical | horizontal |
|---|---|---|
| 2.5 mm² | 8x133 | 11x94 |
| 4 mm² | 8x111 | 11x79 |
| 6 mm² | 8x84 | 11x60 |
| 10 mm² | 8x67 | 11x48 |
| 16 mm² | 8x56 | 11x40 |
| 35 mm² | 8x42 | 11x30 |

**Note**

The assembly with modular terminals gives consideration to a distance of 10 mm from the end of each mounting rail.
Order recommendations:
TS 35 mounting rail (screw terminal) WDU 2.5 1020000000 / (tension clamp terminal) ZDU 2.5 1608510000 / (tension clamp terminal) PDU 2.5 1896110000
TS 32 mounting rail (screw terminal) SAK 2.5 0279660000
TS 15 mounting rail (screw terminal) AKZ 2.5 0697160000

### Accessories

| Mounting plates and fastening screws | Order No. |
|---|---|
| Steel sheet, zinc plated | 1310480000 |
| Stainless steel 1.4301 | 1310390000 |
| Fastening screws for terminal rails | 1274150000 |
| **Stainless steel spacer M6 x 8, Set of 4** | |
| 10 mm length | 0935110000 |
| 15 mm length | 0935120000 |
| 20 mm length | 0935130000 |
| 30 mm length | 0935140000 |
| **Mild steel nickel plated Spacer M6 x 8, set of 2** | |
| 15 mm length | 3896100000 |
| 20 mm length | 3896200000 |
| 30 mm length | 3896300000 |
| **Mounting feet, set containing 4 pieces each** | |
| Stainless steel 1.4301 | 1289180000 |

### Number of cable entries

| Number of cable entries | A / B | C / D |
|---|---|---|
| M12 | 85 | |
| M16 | 58 | |
| M20 | 50 | |
| M25 | 32 | |
| M32 | 17 | |
| M40 | 14 | |
| M50 | 6 | |
| M63 | 5 | |
| M75 | 4 | |

**Note** Our IP 68 brass cable glands are used as the reference for these guideline values.

**Note**

# Klippon® STB – Small Terminal Box

## Steel enclosures

Ideally suited for the energy and process industry and transportation, the Klippon® STB range is the perfect complement to our existing Klippon® enclosure product line. Enclosures of this range comply with international standards such as EN 62208 and EN 60079-0/7 (ATEX).

Some of the many advantages of these cases are:
- Available in stainless steel or in steel sheet
- Higher temperature resistant seals than the standard (extended temperature range of -60 °C to +100 °C / 120 °C, on request)
- Flexible options when mounting the internal rail
- The gasket is protected against compression; this ensures that a permanent and secure seal is maintained.
- Earth studs in the lid and in the enclosure base
- Lasered welding seams offer improved quality
- Delivered with welded mounting feet to ensure an sturdy enclosure installation

Weidmüller can manufacture and supply this enclosure to match customer specifications and fitted with all necessary terminals and cable glands.

## Overview of enclosures

### Ordering data

| Description | Dimensions in mm | Mirror-polish | Electropolished | Powder-coated (RAL7032) |
|---|---|---|---|---|
| Klippon® STB 1 | 120 x 120 x 80 | 1002690000 | 1058810000 | 1024970000 |
| Klippon® STB 1.1 | 150 x 120 x 80 | 1002750000 | 1058820000 | 1024980000 |
| Klippon® STB 2 | 150 x 150 x 90 | 1002740000 | 1058830000 | 1024990000 |
| Klippon® STB 2.1 | 190 x 150 x 90 | 1002730000 | 1058840000 | 1025010000 |
| Klippon® STB 3 | 190 x 190 x100 | 1002720000 | 1058850000 | 1025020000 |
| Klippon® STB 4 | 250 x 250 x 120 | 1002710000 | 1058860000 | 1025030000 |
| Klippon® STB 5 | 160 x 380 x 120 | 1002700000 | 1058880000 | 1025040000 |
| Klippon® STB 6 | 250 x 400 x 130 | 1002760000 | 1058870000 | 1025050000 |
| Note | | | | |

## Technical Overview

### Features

- Mirror-polished or electropolished stainless steel 1.4404 (316L) or powder coated steel sheet 1.0330
- Fitted with a welded, internal C-profile rail (TAS 20) and mounting feet
- Laser cut weld seams
- Approved according to the latest international norms (e.g. ATEX, cULus, GOST)

| | |
|---|---|
| **Note** | We deliver enclosures through our assembly service which are ready to be connected and suitable for every application |

### Technical data

| | Stainless steel | Sheet steel |
|---|---|---|
| Enclosure material | Stainless steel 1.4404 (316L) 1.50 mm | Steel sheet 1.0330 1.50 mm |
| Surface finish | Mirror-polished, electropolished | Powder-coated RAL 7032 |
| IP protection class | IP 66 | IP 66 |
| NEMA Rating | 4, 4x | |
| Earthing | Enclosure base part:<br>internal / external M6 stainless steel<br>Lid: M6 x 12 stainless steel | Enclosure base part:<br>internal / external M6 stainless steel<br>Lid: M6 x 12 stainless steel |
| Installation mounting | Welded C-profile rail | Welded C-profile rail |
| Enclosure attachment | 2 external mounting feet with 8 mm holes | 2 external mounting feet with 8 mm holes |
| Lid opening | Completely removable lid with 4 x M5 screws | Completely removable lid with 4 x M5 screws |
| Impact resistance | 7J ATEX | 10J industrial version |
| Gasket material | Silicone -60 °C...+100 °C (120 °C on request) | Silicone -60 °C...+120 °C |
| Lid screws, torque* | 2.5 Nm | 2.5 Nm |
| The gasket is protected against compression in line with the manufacturer's recommendation | | |
| **Note** | * To secure the lid, please use our hexagonal socket wrench with a 10 mm socket (9009070000) | |

### Approvals for empty enclosures

| | Stainless steel | Sheet steel |
|---|---|---|
| ATEX / IECEx certificate | IBExU 07ATEX1147 U / IECEx IBE09.0018U | |
| ATEX / IECEx marking | Ⓔx II 2 G Ex e II C Gb<br>Ⓔx II 2 D Ex tb IIIC Db IP66 | |
| cULus | E 197061 | |
| Lloyds Register | 08/20032 | 08/20032 |
| Germanischer Lloyd | 5935808 HH | |
| GOST | POCC DE.ME25.B01450 | |
| Installation | The Klippon® STB enclosure range can be pre-fitted in our customer specific production department according to your wishes;<br>as an example, terminals, or other approved components, can be installed as required. | |
| **Note** | This enclosure range is component certified. If other electrical components are inserted into the case, additional certification is required. | |

### Approvals for control and distribution box

| | Stainless steel | Sheet steel |
|---|---|---|
| ATEX / IECEx certificate | IBExU 07ATEX1148 / IECEx IBE09.0019 | * |
| ATEX / IECEx marking | Ⓔx II 2 G Ex e IIC Gb Tx, Ⓔx II 2 D Ex tb IIIC Db IP6x Txxxx °C<br>Ⓔx I II 1 G Ex ia IIC Ga Tx, Ⓔx II 1 D Ex tb IIIC Db IP6x Txxx °C<br>Ⓔx II 2 G Ex e IIC Gb Tx, Ⓔx II 2 D Ex tb IIIC Db IP6x Txxx °C | |
| **Note** | If you have specific requirements for equipment operating in explosive hazard areas, please contact us at Weidmüller to receive a full copy of the certification<br>* The Klippon® STB steel version is not Ex certified | |

## Klippon® STB 1

**Depth** 80 mm

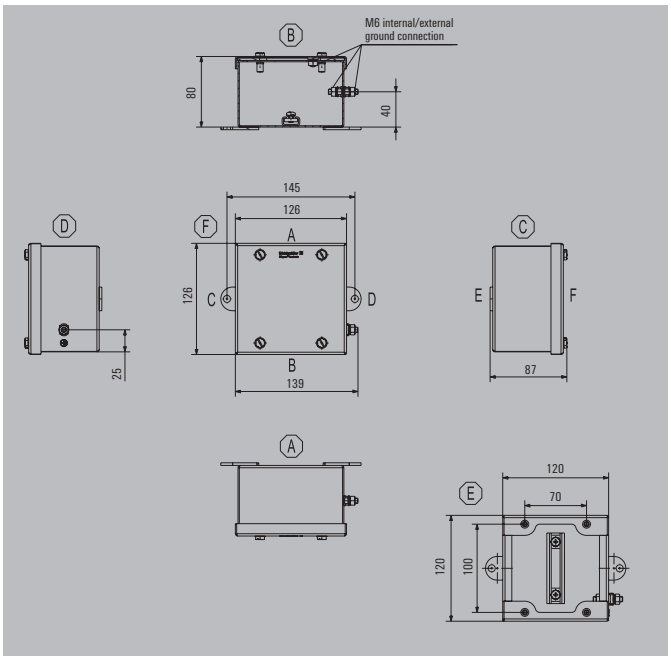


| | |
|---|---|
| Height/Width/Depth | 120 / 120 / 80 mm |

### Ordering data

| Stainless steel 1.4404 (316L) | Order No. |
|---|---|
| Polished Sheet | 1002690000 |
| Electropolished | 1058810000 |
| **Sheet steel, powder-coated (RAL 7032)** | |
| Powder-coated paint | 1024970000 |

**Note** The colours of painted enclosures may vary under certain circumstances.

### Accessories

| Sliding fixing nut with screw | Order No. |
|---|---|
| M5 | 0433500000 |
| **Socket wrench** | |
| M10 socket wrench | 9009070000 |

**Note** The enclosure is supplied with a set of sliding fixing nuts, washer, screws M5, to fix the mounting rail TS 35 or TS 32 into the C-Profile.

### Max. number of terminals (industry)

| Assembly with terminal | vertical | horizontal |
|---|---|---|
| 2.5 mm² | 1x17 | |
| 4 mm² | 1x14 | |
| 6 mm² | 1x11 | |
| 10 mm² | 1x8 | |
| 16 mm² | 1x7 | |

**Note**
The mounting rails are designed to be installed directly.
Assembly with terminals provides for 10 mm clearance to the ends of the mounting rail.
Recommended order:
TS 35 mounting rail (screw terminal) WDU 2.5 1020000000 / (tension clamp terminal) ZDU 2.5 1608510000
TS 32 mounting rail (screw terminal) SAK 2.5 0279660000
TS 15 mounting rail (screw terminal) AKZ 2.5 0697160000

### Number of cable entries

| Number of cable entries | A / B | C / D |
|---|---|---|
| M12 | 10 | 8 |
| M16 | 6 | 4 |
| M20 | 6 | 4 |
| M25 | 3 | 2 |
| M32 | 2 | 1 |
| M40 | 2 | 1 |
| M50 | | |
| M63 | | |

**Note**

## Klippon® STB 1.1

**Depth** 80 mm

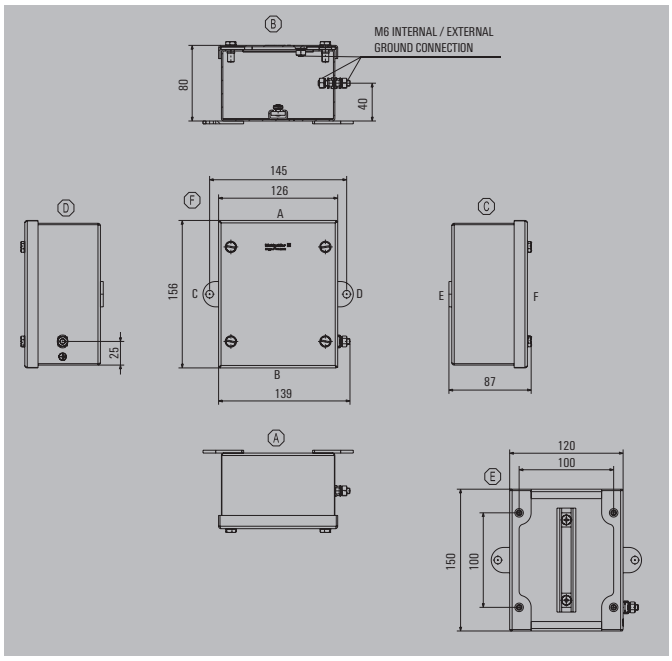


| | |
|---|---|
| Height/Width/Depth | 150 / 120 / 80 mm |

### Ordering data

| Stainless steel 1.4404 (316L) | Order No. |
|---|---|
| Polished Sheet | 1002750000 |
| Electropolished | 1058820000 |
| **Sheet steel, powder-coated (RAL 7032)** | |
| Powder-coated paint | 1024980000 |

**Note** The colours of painted enclosures may vary under certain circumstances.

### Accessories

| Sliding fixing nut with screw | Order No. |
|---|---|
| M5 | 0433500000 |
| **Socket wrench** | |
| M10 socket wrench | 9009070000 |

**Note** The enclosure is supplied with a set of sliding fixing nuts, washer, screws M5, to fix the mounting rail TS 35 or TS 32 into the C-Profile.

### Max. number of terminals (industry)

| Assembly with terminal | vertical | horizontal |
|---|---|---|
| 2.5 mm² | 1x23 | |
| 4 mm² | 1x19 | |
| 6 mm² | 1x14 | |
| 10 mm² | 1x11 | |
| 16 mm² | 1x9 | |

**Note**
The mounting rails are designed to be installed directly.
Assembly with terminals provides for 10 mm clearance to the ends of the mounting rail.
Recommended order:
TS 35 mounting rail (screw terminal) WDU 2.5 1020000000 / (tension clamp terminal) ZDU 2.5 1608510000
TS 32 mounting rail (screw terminal) SAK 2.5 0279660000
TS 15 mounting rail (screw terminal) AKZ 2.5 0697160000

### Number of cable entries

| Number of cable entries | A / B | C / D |
|---|---|---|
| M12 | 10 | 10 |
| M16 | 6 | 6 |
| M20 | 6 | 6 |
| M25 | 3 | 2 |
| M32 | 2 | 2 |
| M40 | 2 | 1 |
| M50 | | |
| M63 | | |

**Note**

## Klippon® STB 2

**Depth** 90 mm

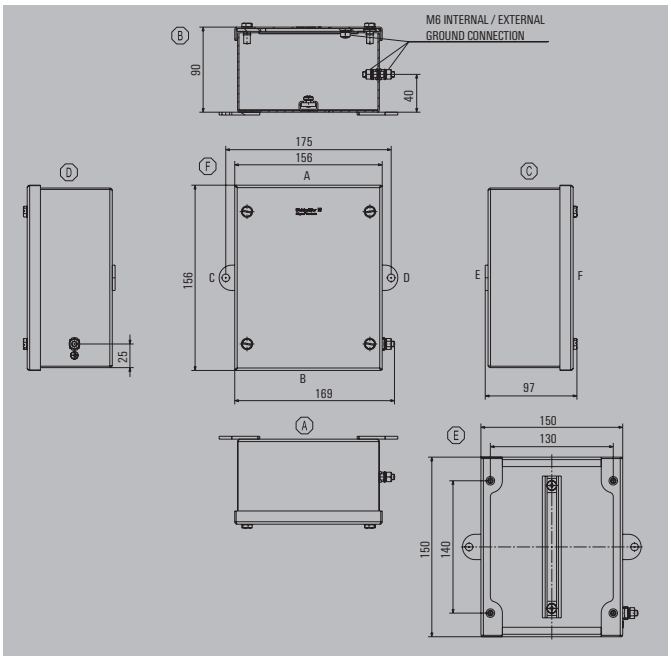


| | |
|---|---|
| Height/Width/Depth | 150 / 150 / 90 mm |

### Ordering data

| Stainless steel 1.4404 (316L) | Order No. |
|---|---|
| Polished Sheet | 1002740000 |
| Electropolished | 1058830000 |
| **Sheet steel, powder-coated (RAL 7032)** | |
| Powder-coated paint | 1024990000 |

**Note** The colours of painted enclosures may vary under certain circumstances.

### Accessories

| Sliding fixing nut with screw | Order No. |
|---|---|
| M5 | 0433500000 |
| **Socket wrench** | |
| M10 socket wrench | 9009070000 |

**Note** The enclosure is supplied with a set of sliding fixing nuts, washer, screws M5, to fix the mounting rail TS 35 or TS 32 into the C-Profile.

### Max. number of terminals (industry)

| Assembly with terminal | vertical | horizontal |
|---|---|---|
| 2.5 mm² | 1x23 | |
| 4 mm² | 1x19 | |
| 6 mm² | 1x14 | |
| 10 mm² | 1x11 | |
| 16 mm² | 1x9 | |

**Note**
The mounting rails are designed to be installed directly.
Assembly with terminals provides for 10 mm clearance to the ends of the mounting rail.
Recommended order:
TS 35 mounting rail (screw terminal) WDU 2.5 1020000000 / (tension clamp terminal) ZDU 2.5 1608510000
TS 32 mounting rail (screw terminal) SAK 2.5 0279660000
TS 15 mounting rail (screw terminal) AKZ 2.5 0697160000

### Number of cable entries

| Number of cable entries | A / B | C / D |
|---|---|---|
| M12 | 15 | 15 |
| M16 | 10 | 8 |
| M20 | 8 | 6 |
| M25 | 3 | 2 |
| M32 | 3 | 2 |
| M40 | 2 | 2 |
| M50 | 1 | 1 |
| M63 | | |

**Note**

## Klippon® STB 2.1

**Depth** 90 mm

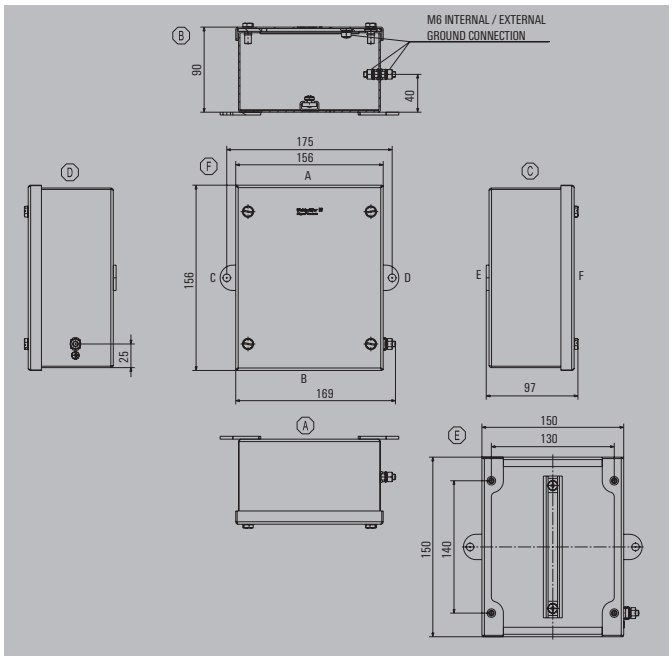


| | |
|---|---|
| Height/Width/Depth | 190 / 150 / 90 mm |

### Ordering data

| Stainless steel 1.4404 (316L) | Order No. |
|---|---|
| Polished Sheet | 1002730000 |
| Electropolished | 1058840000 |
| **Sheet steel, powder-coated (RAL 7032)** | |
| Powder-coated paint | 1025010000 |

**Note** The colours of painted enclosures may vary under certain circumstances.

### Accessories

| Sliding fixing nut with screw | Order No. |
|---|---|
| M5 | 0433500000 |
| **Socket wrench** | |
| M10 socket wrench | 9009070000 |

**Note** The enclosure is supplied with a set of sliding fixing nuts, washer, screws M5, to fix the mounting rail TS 35 or TS 32 into the C-Profile.

### Max. number of terminals (industry)

| Assembly with terminal | vertical | horizontal |
|---|---|---|
| 2.5 mm² | 1x30 | |
| 4 mm² | 1x25 | |
| 6 mm² | 1x20 | |
| 10 mm² | 1x15 | |
| 16 mm² | 1x13 | |

**Note**
The mounting rails are designed to be installed directly.
Assembly with terminals provides for 10 mm clearance to the ends of the mounting rail.
Recommended order:
TS 35 mounting rail (screw terminal) WDU 2.5 1020000000 / (tension clamp terminal) ZDU 2.5 1608510000
TS 32 mounting rail (screw terminal) SAK 2.5 0279660000
TS 15 mounting rail (screw terminal) AKZ 2.5 0697160000

### Number of cable entries

| Number of cable entries | A / B | C / D |
|---|---|---|
| M12 | 15 | 18 |
| M16 | 10 | 10 |
| M20 | 8 | 10 |
| M25 | 3 | 3 |
| M32 | 3 | 3 |
| M40 | 2 | 2 |
| M50 | 1 | 1 |
| M63 | | |

**Note**

## Klippon® STB 3

**Depth** 100 mm

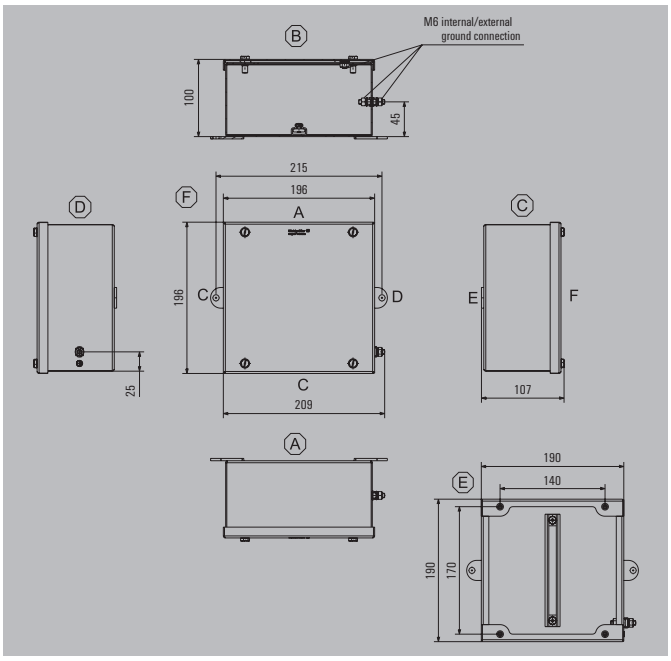


| | |
|---|---|
| Height/Width/Depth | 190 / 190 / 100 mm |

### Ordering data

| Stainless steel 1.4404 (316L) | Order No. |
|---|---|
| Polished Sheet | 1002720000 |
| Electropolished | 1058850000 |
| **Sheet steel, powder-coated (RAL 7032)** | |
| Powder-coated paint | 1025020000 |

**Note** The colours of painted enclosures may vary under certain circumstances.

### Accessories

| Sliding fixing nut with screw | Order No. |
|---|---|
| M5 | 0433500000 |
| **Socket wrench** | |
| M10 socket wrench | 9009070000 |

**Note** The enclosure is supplied with a set of sliding fixing nuts, washer, screws M5, to fix the mounting rail TS 35 or TS 32 into the C-Profile.

### Max. number of terminals (industry)

| Assembly with terminal | vertical | horizontal |
|---|---|---|
| 2.5 mm² | 1x30 | |
| 4 mm² | 1x25 | |
| 6 mm² | 1x20 | |
| 10 mm² | 1x15 | |
| 16 mm² | 1x13 | |

**Note**
The mounting rails are designed to be installed directly.
Assembly with terminals provides for 10 mm clearance to the ends of the mounting rail.
Recommended order:
TS 35 mounting rail (screw terminal) WDU 2.5 1020000000 / (tension clamp terminal) ZDU 2.5 1608510000
TS 32 mounting rail (screw terminal) SAK 2.5 0279660000
TS 15 mounting rail (screw terminal) AKZ 2.5 0697160000

### Number of cable entries

| Number of cable entries | A / B | C / D |
|---|---|---|
| M12 | 21 | 21 |
| M16 | 15 | 15 |
| M20 | 10 | 8 |
| M25 | 8 | 6 |
| M32 | 3 | 3 |
| M40 | 3 | 2 |
| M50 | 2 | 1 |
| M63 | 1 | |

**Note**

## Klippon® STB 4

**Depth** 120 mm

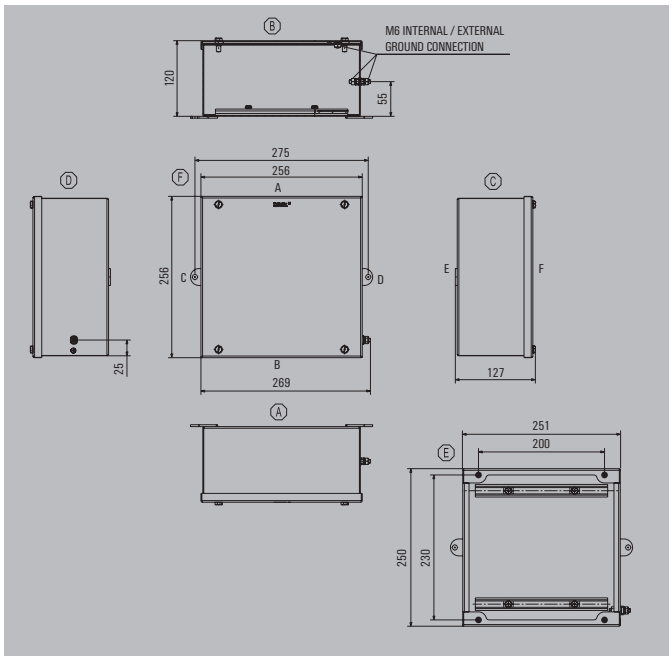


| | |
|---|---|
| Height/Width/Depth | 250 / 250 / 120 mm |

### Ordering data

| Stainless steel 1.4404 (316L) | Order No. |
|---|---|
| Polished Sheet | 1002710000 |
| Electropolished | 1058860000 |
| **Sheet steel, powder-coated (RAL 7032)** | |
| Powder-coated paint | 1025030000 |

**Note** The colours of painted enclosures may vary under certain circumstances.

### Accessories

| Sliding fixing nut with screw | Order No. |
|---|---|
| M5 | 0433500000 |
| **Socket wrench** | |
| M10 socket wrench | 9009070000 |

**Note** The enclosure is supplied with a set of sliding fixing nuts, washer, screws M5, to fix the mounting rail TS 35 or TS 32 into the C-Profile.

### Max. number of terminals (industry)

| Assembly with terminal | vertical | horizontal |
|---|---|---|
| 2.5 mm² | 2x42 | 2x42 |
| 4 mm² | 2x35 | 2x35 |
| 6 mm² | 2x27 | 2x27 |
| 10 mm² | 2x22 | 2x22 |
| 16 mm² | 2x18 | 2x18 |

**Note**
The mounting rails are designed to be installed directly.
Assembly with terminals provides for 10 mm clearance to the ends of the mounting rail.
Recommended order:
TS 35 mounting rail (screw terminal) WDU 2.5 1020000000 / (tension clamp terminal) ZDU 2.5 1608510000
TS 32 mounting rail (screw terminal) SAK 2.5 0279660000
TS 15 mounting rail (screw terminal) AKZ 2.5 0697160000

### Number of cable entries

| Number of cable entries | A / B | C / D |
|---|---|---|
| M12 | 24 | 24 |
| M16 | 21 | 21 |
| M20 | 12 | 12 |
| M25 | 10 | 10 |
| M32 | 8 | 8 |
| M40 | 3 | 3 |
| M50 | 3 | 2 |
| M63 | 2 | 1 |

**Note**

## Klippon® STB 5

**Depth** 120 mm

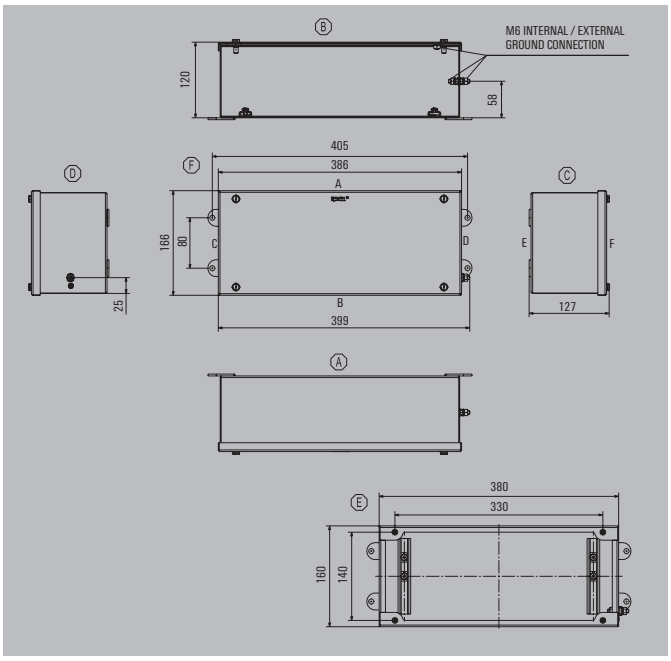


| | |
|---|---|
| Height/Width/Depth | 160 / 380 / 120 mm |

### Ordering data

| Stainless steel 1.4404 (316L) | Order No. |
|---|---|
| Polished Sheet | 1002700000 |
| Electropolished | 1058880000 |
| **Sheet steel, powder-coated (RAL 7032)** | |
| Powder-coated paint | 1025040000 |

**Note** The colours of painted enclosures may vary under certain circumstances.

### Accessories

| Sliding fixing nut with screw | Order No. |
|---|---|
| M5 | 0433500000 |
| **Socket wrench** | |
| M10 socket wrench | 9009070000 |

**Note** The enclosure is supplied with a set of sliding fixing nuts, washer, screws M5, to fix the mounting rail TS 35 or TS 32 into the C-Profile.

### Max. number of terminals (industry)

| Assembly with terminal | vertical | horizontal |
|---|---|---|
| 2.5 mm² | 3x25 | 1x68 |
| 4 mm² | 3x21 | 1x57 |
| 6 mm² | 3x16 | 1x44 |
| 10 mm² | 3x12 | 1x35 |
| 16 mm² | 3x10 | 1x29 |

**Note**
The mounting rails are designed to be installed directly.
Assembly with terminals provides for 10 mm clearance to the ends of the mounting rail.
Recommended order:
TS 35 mounting rail (screw terminal) WDU 2.5 1020000000 / (tension clamp terminal) ZDU 2.5 1608510000
TS 32 mounting rail (screw terminal) SAK 2.5 0279660000
TS 15 mounting rail (screw terminal) AKZ 2.5 0697160000

### Number of cable entries

| Number of cable entries | A / B | C / D |
|---|---|---|
| M12 | 64 | 20 |
| M16 | 33 | 12 |
| M20 | 30 | 12 |
| M25 | 16 | 6 |
| M32 | 10 | 4 |
| M40 | 6 | 2 |
| M50 | 4 | 1 |
| M63 | 2 | 1 |

**Note**

## Klippon® STB 6

**Depth** 130 mm

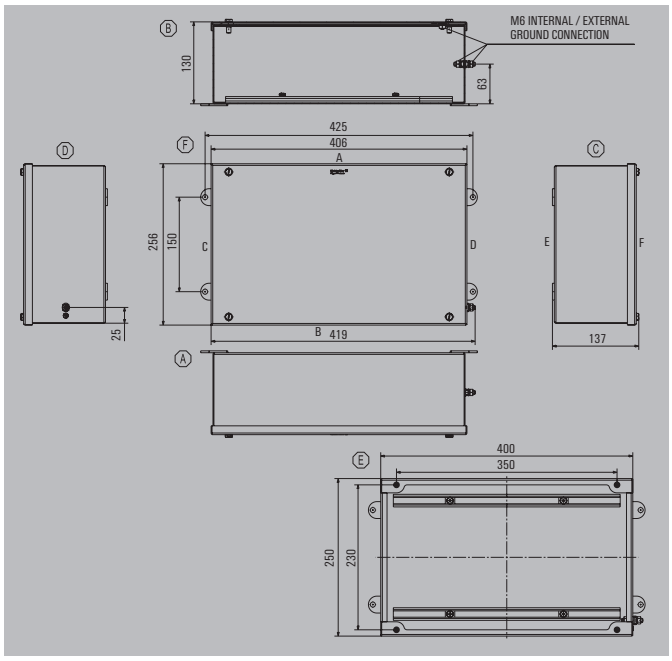


| | |
|---|---|
| Height/Width/Depth | 250 / 400 / 130 mm |

### Ordering data

| Stainless steel 1.4404 (316L) | Order No. |
|---|---|
| Polished Sheet | 1002760000 |
| Electropolished | 1058870000 |
| **Sheet steel, powder-coated (RAL 7032)** | |
| Powder-coated paint | 1025050000 |

**Note** The colours of painted enclosures may vary under certain circumstances.

### Accessories

| Sliding fixing nut with screw | Order No. |
|---|---|
| M5 | 0433500000 |
| **Socket wrench** | |
| M10 socket wrench | 9009070000 |

**Note** The enclosure is supplied with a set of sliding fixing nuts, washer, screws M5, to fix the mounting rail TS 35 or TS 32 into the C-Profile.

### Max. number of terminals (industry)

| Assembly with terminal | vertical | horizontal |
|---|---|---|
| 2.5 mm² | 3x42 | 2x72 |
| 4 mm² | 3x35 | 2x60 |
| 6 mm² | 3x27 | 2x46 |
| 10 mm² | 3x22 | 2x37 |
| 16 mm² | 3x18 | 2x30 |

**Note**
The mounting rails are designed to be installed directly.
Assembly with terminals provides for 10 mm clearance to the ends of the mounting rail.
Recommended order:
TS 35 mounting rail (screw terminal) WDU 2.5 1020000000 / (tension clamp terminal) ZDU 2.5 1608510000
TS 32 mounting rail (screw terminal) SAK 2.5 0279660000
TS 15 mounting rail (screw terminal) AKZ 2.5 0697160000

### Number of cable entries

| Number of cable entries | A / B | C / D |
|---|---|---|
| M12 | 64 | 36 |
| M16 | 33 | 21 |
| M20 | 30 | 18 |
| M25 | 16 | 10 |
| M32 | 10 | 8 |
| M40 | 6 | 3 |
| M50 | 4 | 2 |
| M63 | 2 | 2 |

**Note**

# Klippon® K – Aluminium enclosures

Klippon® K range enclosures can be used in a variety of applications, e.g. for mounting terminals, switches, power supplies, operational and display elements or electronic modules.

The extensive Klippon® K enclosure range has the following advantages:
- More flexibility – 19 different sizes
- Available in two surface finishes – powder-coated and natural
- Mounting holes not within the sealed area
- Fastening thread to attach mounting rails and plates
- Closed moulded gasket (no glue seam)

Weidmüller can manufacture and supply this enclosure to match customer specifications and fitted with all necessary terminals and cable glands.

## Overview of enclosures

### Ordering data

| Description | Dimensions in mm | Powder-coated (RAL 7001) | | Unpainted | | |
|---|---|---|---|---|---|---|
| | | Standard | | Standard | | Ex enclosure |
| | | CR moulded seal | Silicone moulded seal* | CR moulded seal | Silicone moulded seal* | Silicone moulded seal |
| Klippon® K 0 | 45 x 50 x 30 | 9529090000 | 1937920000 | 0573200000 | 1939760000 | |
| Klippon® K 01 | 64 x 58 x 34 | 9529100000 | 1937850000 | 1565240000 | 1939540000 | |
| Klippon® K 02 | 64 x 98 x 34 | 9529110000 | 1937840000 | 1565250000 | 1939550000 | |
| Klippon® K 1 | 70 x 70 x 45 | 9529120000 | 1937630000 | 0342000000 | 1939560000 | 9526840000 |
| Klippon® K 11 | 80 x 75 x 57 | 9529130000 | 1937910000 | 0573300000 | 1939570000 | 9526850000 |
| Klippon® K 2 | 70 x 100 x 45 | 9529140000 | 1937930000 | 0342100000 | 1939580000 | 9526860000 |
| Klippon® K 21 | 80 x 125 x 57 | 9529150000 | 1937830000 | 0573400000 | 1939590000 | 9526870000 |
| Klippon® K 3 | 70 x 165 x 45 | 9529160000 | 1937900000 | 0342200000 | 1939600000 | 9526880000 |
| Klippon® K 31 | 80 x 175 x 57 | 9529170000 | 1937820000 | 0573500000 | 1939610000 | 9526890000 |
| Klippon® K 32 | 80 x 250 x 55 | 9529180000 | 1937810000 | 1565260000 | 1939620000 | 9526900000 |
| Klippon® K 4 | 82 x 130 x 72 | 9529190000 | 1937890000 | 0342300000 | 1939630000 | 9526910000 |
| Klippon® K 41 | 120 x 122 x 81 | 9529200000 | 1937800000 | 1565270000 | 1939640000 | 9526920000 |
| Klippon® K 5 | 130 x 170 x 90 | 9529210000 | 1937860000 | 0342400000 | 1939650000 | 9526930000 |
| Klippon® K 51 | 120 x 220 x 81 | 9529220000 | 1937750000 | 1565280000 | 1939660000 | 9526940000 |
| Klippon® K 52 | 160 x 160 x 91 | 9529230000 | 1937740000 | 1565290000 | 1939670000 | 9526950000 |
| Klippon® K 6 | 160 x 200 x 100 | 9529240000 | 1937870000 | 0342500000 | 1939690000 | 9526960000 |
| Klippon® K 61 | 160 x 260 x 91 | 9529250000 | 1937730000 | 0573600000 | 1939700000 | 9526970000 |
| Klippon® K 7 | 160 x 350 x 100 | 9529260000 | 1937880000 | 0342600000 | 1939710000 | 9526980000 |
| Klippon® K 71 | 230 x 280 x 111 | 9529270000 | 1937720000 | 0573700000 | 1939730000 | 9526990000 |
| Note | *Delivery time on request | | | | | |

## Technical Overview

### Features

- Two surfaces: natural and powder-coated
- High IP protection up to IP 68
- Moulded silicone gasket for applications with high temperatures
- A uniform Torx®-slotted screw head is used for over 19 different enclosure sizes.
- Alloy is resistant to salt water
- Approved according to the latest international standards (e.g. ATEX, cULus, GOST)

| | |
|---|---|
| **Note** | We deliver enclosures through our assembly service which are ready to be connected and suitable for every application |

### Technical data

| | Ex | Standard |
|---|---|---|
| Enclosure material | High quality aluminium alloy (Al-Si12) | High quality aluminium alloy (Al-Si12) |
| Surface, untreated | Smooth | Smooth |
| Surface, painted | | Silver grey, textured, similar to RAL 7001 |
| Painting | | 40 µm paint thickness |
| IP protection class | IP 66, IP 67 | IP 66, IP 67 and IP 68* |
| NEMA | | 4, 4x |
| Earthing outside | Earthing studs, M4 | |
| Installation mounting | Flexible DIN rail mounting | Flexible DIN rail mounting |
| Enclosure mounting | Direct mounting with optional mounting brackets (from a size of 120 x 122 x 81 Klippon® K 41) | Direct mounting with optional mounting brackets (from a size of 120 x 122 x 81 Klippon® K 41) |
| Lid fixing | Captive stainless steel Torx® 20 or slotted screws. | Captive stainless steel Torx® 20 or slotted screws. |
| Impact resistance | 7J | 10J |
| Gasket material | Silicone (VMQ) | Chloroprene / Silicone (VMQ) |
| Temperature range | -50 °C...+135 °C | -40 °C...+80 °C with chloroprene gasket /<br>-50 °C...+135 °C with silicone gasket |
| Lid screws, torque** | 2.5 Nm | 2.5 Nm |
| **Note** | * (t=72h; h=1m)<br>** To secure the lid we recommend the use of our Torx® TH20 screwdriver (9009160000)<br>Depending on the screw head size, our slotted screwdriver may also be used as an alternative | |

### Approvals for empty enclosures

| | Ex | Standard |
|---|---|---|
| ATEX certificate | KEMA 02ATEX2088 U | |
| ATEX marking | II 2 G Ex e II IP66/IP67 | |
| IECEx certificate | IECEXIBE 13.0001 U | |
| IECEx marking | Ex e IIC Gb | |
| GOST Ex | POCC DE.ME92.B00362 | |
| GOST | POCC DE.ME25.B01450 | POCC DE.ME25.B01450 |
| cULus | | E 197061 |
| Russian Maritime Register | 11040200 | 11040200 |
| Germanischer Lloyd | 4453607 HH | 4453607 HH |
| Installation | The Klippon® K enclosure range can be pre-fitted in our customer specific production department according to your wishes;<br>as an example, terminals, or other approved components, can be installed as required. | |
| **Note** | This enclosure range is component certified. If other electrical components are inserted into the case, additional certification is required. | |

### Approvals for control and distribution box

| | Ex | Standard |
|---|---|---|
| ATEX certificate | KEMA 00ATEX8501 X | |
| ATEX marking | Ex II 2 GD Ex e II T6/T3 IP66/IP67<br>Ex II 2 (1) GD Ex e[ia] IIG T6/T3 | |
| IECEx certificate | IECEXIBE 13.0002 | |
| IECEx marking | Ex e IIC T Gb<br>Ex tb IIIC T °C Db | |
| **Note** | If you have specific requirements for equipment operating in explosive hazard areas, please contact us at Weidmüller to receive a full copy of the certification. | |

## Klippon® K 0

**Depth** 30 mm

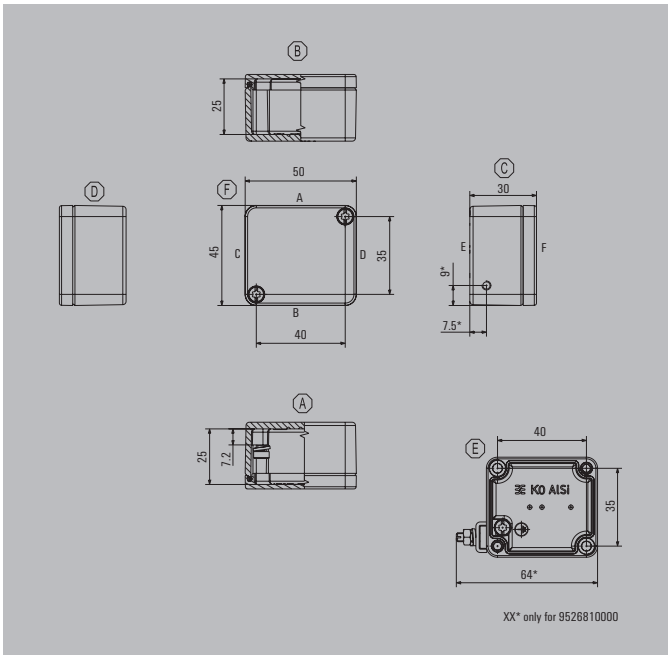


| | |
|---|---|
| Height/Width/Depth | 45 / 50 / 30 mm |

### Ordering data

| powder-coated (RAL 7001) | Order No. |
|---|---|
| Standard (CR seal) | 9529090000 |
| Standard (silicone seal)** | 1937920000 |
| **unpainted** | |
| Standard (CR seal) | 0573200000 |

**Note** The colours of painted enclosures may vary under certain circumstances. **Delivery time available on request.

### Accessories

| Torx® screwdriver | Order No. |
|---|---|
| Uninsulated Torx® TH20 | 9009160000 |

### Max. number of terminals (industry)

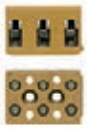

| Assembly with terminal | vertical | horizontal |
|---|---|---|
| 2.5 mm² | 1x1* | 1x1* |
| 4 mm² | 1x1* | 1x1* |
| 6 mm² | | |
| 10 mm² | | |
| 16 mm² | | |

**Note** *Please refer to the Terminal Block catalogue or the SAK Range for more information about assembling the enclosures with terminal blocks. There are no prescribed possible attachment points in the enclosure.

### Number of cable entries

| Number of cable entries | A / B | C / D |
|---|---|---|
| M12 | 1 | 1 |
| M16 | 1 | 1 |
| M20 | | |
| M25 | | |
| M32 | | |
| M40 | | |
| M50 | | |
| M63 | | |

**Note** **Our IP 68 brass cable glands are used as the reference for these guideline values.

**Note**

## Klippon® K 01

**Depth** 34 mm

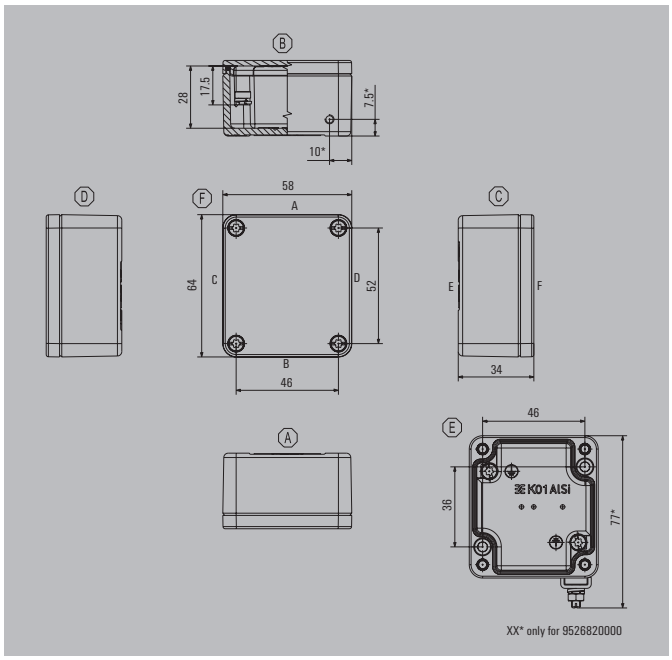


| | |
|---|---|
| Height/Width/Depth | 64 / 58 / 34 mm |

### Ordering data

| powder-coated (RAL 7001) | Order No. |
|---|---|
| Standard (CR seal) | 9529100000 |
| Standard (silicone seal)** | 1937850000 |
| **unpainted** | |
| Standard (CR seal) | 1565240000 |

**Note** The colours of painted enclosures may vary under certain circumstances. **Delivery time available on request.

### Accessories

| Torx® screwdriver | Order No. |
|---|---|
| Uninsulated Torx® TH20 | 9009160000 |

### Max. number of terminals (industry)

| Assembly with terminal | vertical | horizontal |
|---|---|---|
| 2.5 mm² | 1x1* | 1x1* |
| 4 mm² | 1x1* | 1x1* |
| 6 mm² | | |
| 10 mm² | | |
| 16 mm² | | |

**Note** *Please refer to the Terminal Block catalogue or the SAK Range for more information about assembling the enclosures with terminal blocks. There are no prescribed possible attachment points in the enclosure.

### Number of cable entries

| Number of cable entries | A / B | C / D |
|---|---|---|
| M12 | 1 | 1 |
| M16 | 1 | 1 |
| M20 | | |
| M25 | | |
| M32 | | |
| M40 | | |
| M50 | | |
| M63 | | |

**Note** **Our IP 68 brass cable glands are used as the reference for these guideline values.

**Note**

## Klippon® K 02

**Depth** 34 mm

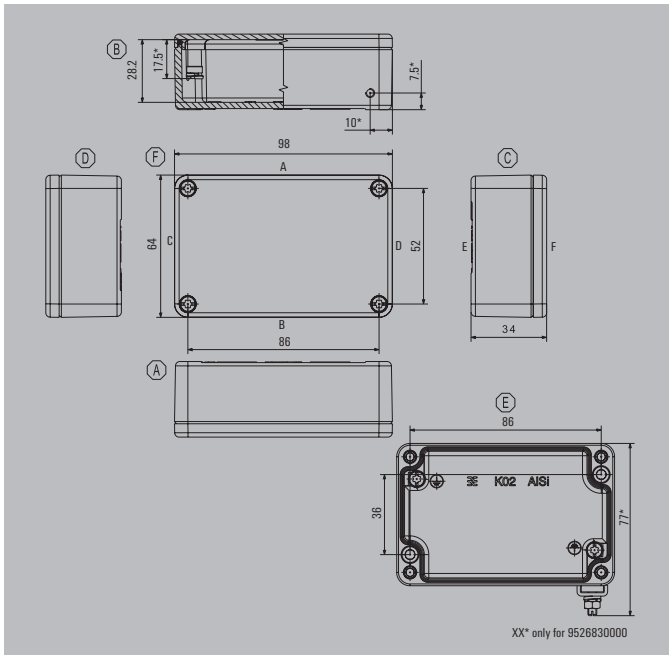


| Height/Width/Depth | 64 / 98 / 34 mm |
|---|---|

### Ordering data

| powder-coated (RAL 7001) | Order No. |
|---|---|
| Standard (CR seal) | 9529110000 |
| Standard (silicone seal)** | 1937840000 |
| **unpainted** | |
| Standard (CR seal) | 1565250000 |

**Note** The colours of painted enclosures may vary under certain circumstances. **Delivery time available on request.

### Accessories

| Torx® screwdriver | Order No. |
|---|---|
| Uninsulated Torx® TH20 | 9009160000 |

### Max. number of terminals (industry)

| Assembly with terminal | vertical | horizontal |
|---|---|---|
| 2.5 mm² | 1x1* | 1x1* |
| 4 mm² | 1x1* | 1x1* |
| 6 mm² | | |
| 10 mm² | | |
| 16 mm² | | |

**Note** *Please refer to the Terminal Block catalogue or the SAK Range for more information about assembling the enclosures with terminal blocks. There are no prescribed possible attachment points in the enclosure.

### Number of cable entries

| Number of cable entries | A / B | C / D |
|---|---|---|
| M12 | 3 | 1 |
| M16 | 3 | 1 |
| M20 | 2 | |
| M25 | | |
| M32 | | |
| M40 | | |
| M50 | | |
| M63 | | |

**Note** **Our IP 68 brass cable glands are used as the reference for these guideline values.

**Note**

## Klippon® K 1

**Depth** 45 mm

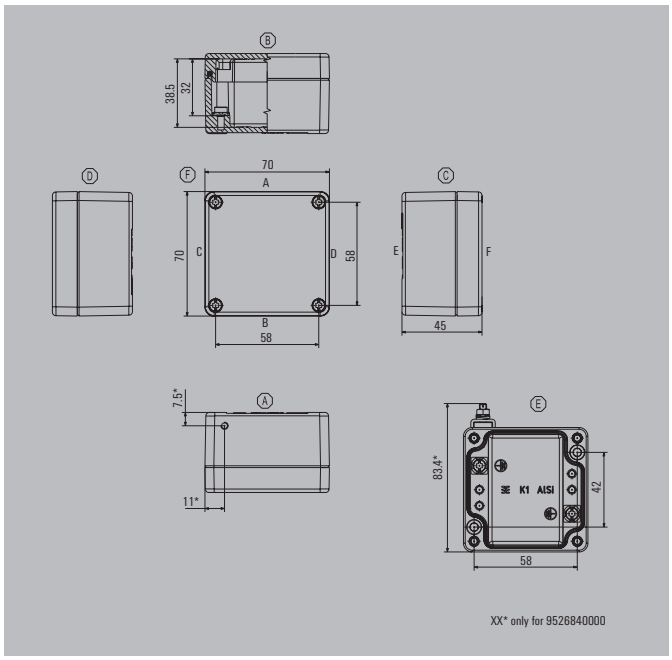


| Height/Width/Depth | 70 / 70 / 45 mm |
|---|---|

### Ordering data

| powder-coated (RAL 7001) | Order No. |
|---|---|
| Standard (CR seal) | 9529120000 |
| Standard (silicone seal)** | 1937630000 |
| **unpainted** | |
| Standard (CR seal) | 0342000000 |
| Ex enclosure (silicone seal) | 9526840000 |

**Note** The colours of painted enclosures may vary under certain circumstances. **Delivery time available on request.

### Accessories

| Terminal rail, Set | Order No. |
|---|---|
| 15 mm width | 1909980000 |
| **Mounting plate** | |
| Steel sheet, zinc plated | 1905280000 |
| **Torx® screwdriver** | |
| Uninsulated Torx® TH20 | 9009160000 |

**Note** The accessory sets contain the necessary mounting material.

### Max. number of terminals (industry)

| Assembly with terminal | vertical | horizontal |
|---|---|---|
| 2.5 mm² | 1x1* | 1x5 |
| 4 mm² | 1x1* | 1x1* |
| 6 mm² | | |
| 10 mm² | | |
| 16 mm² | | |

**Note** *Please refer to the Terminal Block Catalogue or the SAK Range for more information about populating the enclosures with terminal blocks. For vertical installations, we recommend using not more than one BK 4 or BK 4 CRN (0625120000). For horizontal installations with 2.5mm² 1x5 AKZ terminal blocks (only possible on a TS 15) for 4mm², use not more than one BK 4. There are no pre-defined mounting points set within this enclosure for installing internal equipment in a vertical position.

### Number of cable entries

| Number of cable entries | A / B | C / D |
|---|---|---|
| M12 | 2 | 1 |
| M16 | 2 | 1 |
| M20 | 1 | |
| M25 | | |
| M32 | | |
| M40 | | |
| M50 | | |
| M63 | | |

**Note** **Our IP 68 brass cable glands are used as the reference for these guideline values.

### Dimensions of mounting plate

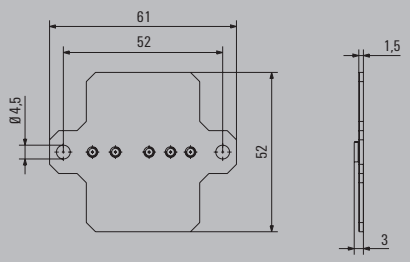

## Klippon® K 11

**Depth** 57 mm

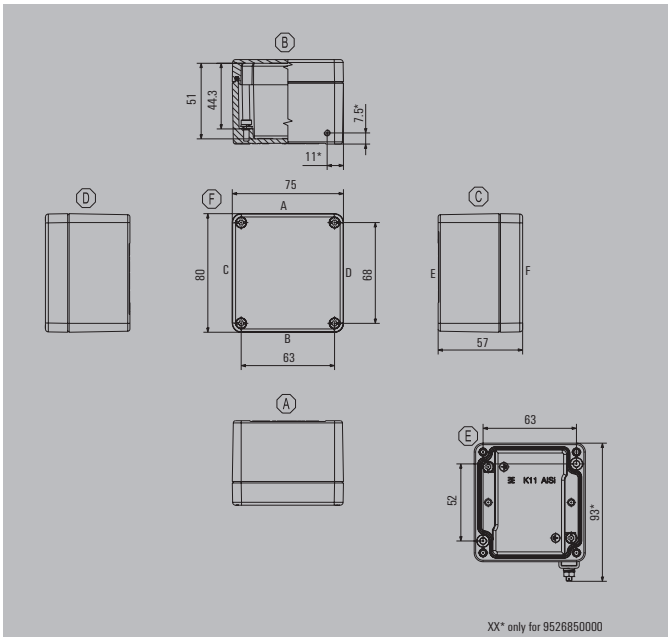


| Height/Width/Depth | 80 / 75 / 57 mm |
|---|---|

### Ordering data

| powder-coated (RAL 7001) | Order No. |
|---|---|
| Standard (CR seal) | 9529130000 |
| Standard (silicone seal)** | 1937910000 |
| **unpainted** | |
| Standard (CR seal) | 0573300000 |
| Ex enclosure (silicone seal) | 9526850000 |

**Note** The colours of painted enclosures may vary under certain circumstances. **Delivery time available on request.

### Accessories

| Terminal rail, Set | Order No. |
|---|---|
| 15 mm width | 1909990000 |
| **Mounting plate** | |
| Steel sheet, zinc plated | 3073000000 |
| **Hinge, diecast zinc, Set** | |
| | 1580360000 |
| **Torx® screwdriver** | |
| Uninsulated Torx® TH20 | 9009160000 |

**Note** The accessory sets contain the necessary mounting material. Necessary on use of 1 hinge per longitudinal side.

### Max. number of terminals (industry)

| Assembly with terminal | vertical | horizontal |
|---|---|---|
| 2.5 mm² | 1x1* | 1x5 |
| 4 mm² | 1x1* | 1x4 |
| 6 mm² | | |
| 10 mm² | | |
| 16 mm² | | |

**Note** *Please refer to the Terminal Block Catalogue or the SAK Range for more information about populating the enclosures with terminal blocks. We recommend at most one BK 6 or BK 6 CRN (0625220000) in vertical installations. There are no pre-defined mounting points set within this enclosure for installing internal equipment in a vertical position.

### Number of cable entries

| Number of cable entries | A / B | C / D |
|---|---|---|
| M12 | 2 | 2 |
| M16 | 2 | 2 |
| M20 | 1 | 1 |
| M25 | 1 | |
| M32 | | |
| M40 | | |
| M50 | | |
| M63 | | |

**Note** **Our IP 68 brass cable glands are used as the reference for these guideline values.

### Dimensions of mounting plate

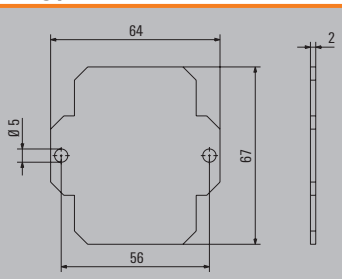

## Klippon® K 2

**Depth** 45 mm

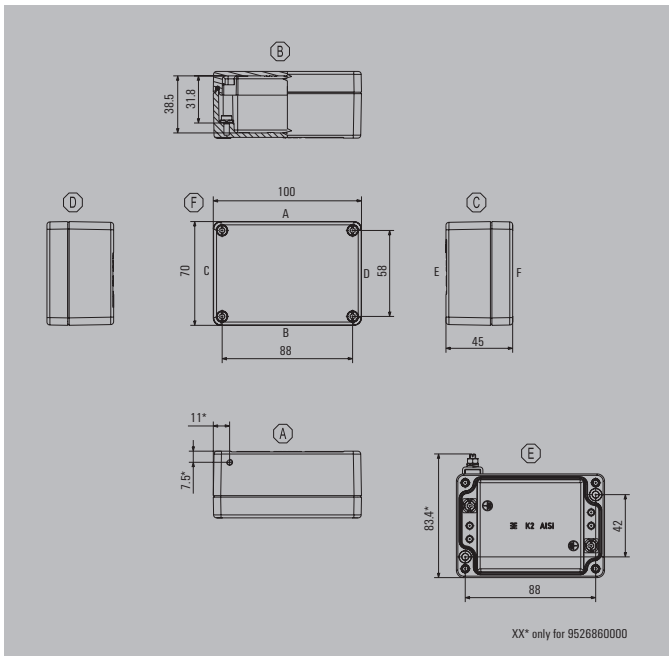


| Height/Width/Depth | 70 / 100 / 45 mm |
|---|---|

### Ordering data

| powder-coated (RAL 7001) | Order No. |
|---|---|
| Standard (CR seal) | 9529140000 |
| Standard (silicone seal)** | 1937930000 |
| **unpainted** | |
| Standard (CR seal) | 0342100000 |
| Ex enclosure (silicone seal) | 9526860000 |

**Note** The colours of painted enclosures may vary under certain circumstances. **Delivery time available on request.

### Accessories

| Terminal rail, Set | Order No. |
|---|---|
| 15 mm width | 1910010000 |
| **Mounting plate** | |
| Steel sheet, zinc plated | 1905270000 |
| **Torx® screwdriver** | |
| Uninsulated Torx® TH20 | 9009160000 |

**Note** The accessory sets contain the necessary mounting material.

### Max. number of terminals (industry)

| Assembly with terminal | vertical | horizontal |
|---|---|---|
| 2.5 mm² | * | 1x10 |
| 4 mm² | * | |
| 6 mm² | | |
| 10 mm² | | |
| 16 mm² | | |

**Note** *Please refer to the Terminal Block Catalogue or the SAK Range for more information about populating the enclosures with terminal blocks. We recommend at most one BK 6 or BK 6 CRN (0625220000) for vertical installations. There are no pre-defined mounting points set within this enclosure for installing internal equipment in a vertical position.

### Number of cable entries

| Number of cable entries | A / B | C / D |
|---|---|---|
| M12 | 3 | 1 |
| M16 | 3 | 1 |
| M20 | 2 | |
| M25 | | |
| M32 | | |
| M40 | | |
| M50 | | |
| M63 | | |

**Note** **Our IP 68 brass cable glands are used as the reference for these guideline values.

### Dimensions of mounting plate

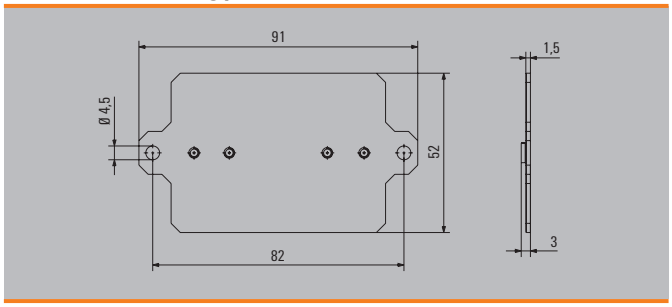

## Klippon® K 21

**Depth** 57 mm

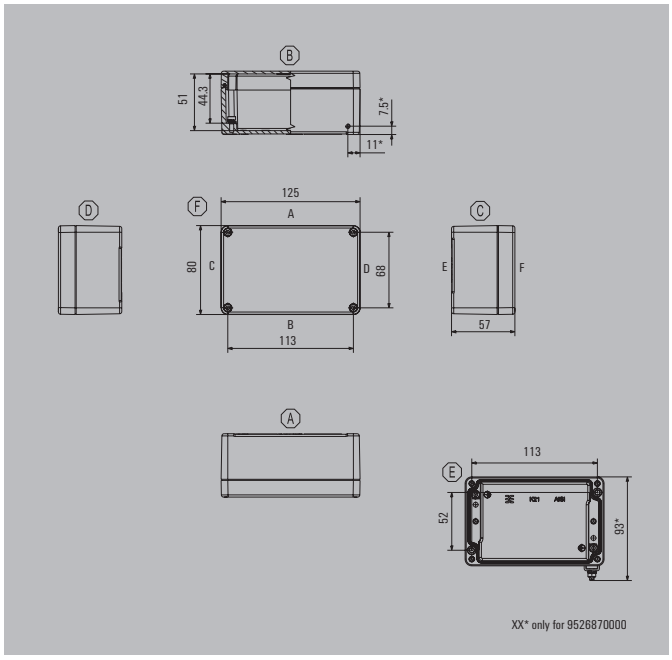


| Height/Width/Depth | 80 / 125 / 57 mm |
|---|---|

### Ordering data

| powder-coated (RAL 7001) | Order No. |
|---|---|
| Standard (CR seal) | 9529150000 |
| Standard (silicone seal)** | 1937830000 |
| **unpainted** | |
| Standard (CR seal) | 0573400000 |
| Ex enclosure (silicone seal) | 9526870000 |

**Note** The colours of painted enclosures may vary under certain circumstances. **Delivery time available on request.

### Accessories

| Terminal rail, Set | Order No. |
|---|---|
| 15 mm width | 1910020000 |
| **Mounting plate** | |
| Steel sheet, zinc plated | 3073020000 |
| **Hinge, diecast zinc, Set** | |
| | 1580360000 |
| **Torx® screwdriver** | |
| Uninsulated Torx® TH20 | 9009160000 |

**Note** The accessory sets contain the necessary mounting material. Necessary on use of 1 hinge per longitudinal side.

### Max. number of terminals (industry)

| Assembly with terminal | vertical | horizontal |
|---|---|---|
| 2.5 mm² | * | 1x15 |
| 4 mm² | * | 1x12 |
| 6 mm² | | |
| 10 mm² | | |
| 16 mm² | | |

**Note** *Please refer to the Terminal Block Catalogue or the SAK Range for more information about populating the enclosures with terminal blocks. We recommend BK 6 or BK 6 CRN (0625220000) for vertical installations. There are no pre-defined mounting points set within this enclosure for installing internal equipment in a vertical position.

### Number of cable entries

| Number of cable entries | A / B | C / D |
|---|---|---|
| M12 | 6 | 2 |
| M16 | 4 | 2 |
| M20 | 3 | 1 |
| M25 | 2 | |
| M32 | | |
| M40 | | |
| M50 | | |
| M63 | | |

**Note** **Our IP 68 brass cable glands are used as the reference for these guideline values.

### Dimensions of mounting plate

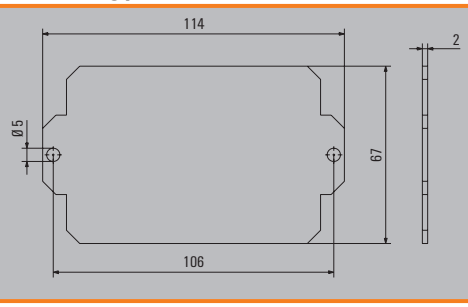

## Klippon® K 3

**Depth** 45 mm

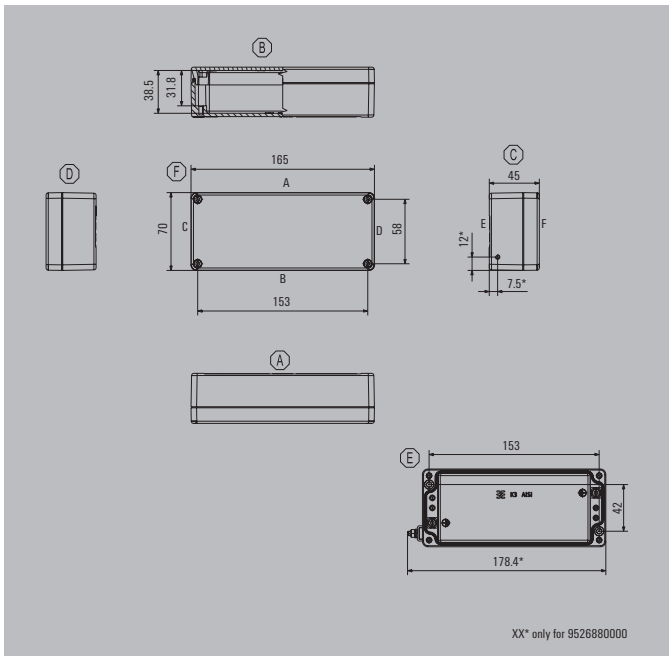


| Height/Width/Depth | 70 / 165 / 45 mm |
|---|---|

### Ordering data

| powder-coated (RAL 7001) | Order No. |
|---|---|
| Standard (CR seal) | 9529160000 |
| Standard (silicone seal)** | 1937900000 |
| **unpainted** | |
| Standard (CR seal) | 0342200000 |
| Ex enclosure (silicone seal) | 9526880000 |

**Note** The colours of painted enclosures may vary under certain circumstances. **Delivery time available on request.

### Accessories

| Terminal rail, Set | Order No. |
|---|---|
| 15 mm width | 1910030000 |
| **Mounting plate** | |
| Steel sheet, zinc plated | 1898210000 |
| More tightly drawn | 1899630000 |
| **Torx® screwdriver** | |
| Uninsulated Torx® TH20 | 9009160000 |

**Note** The accessory sets contain the necessary mounting material.

### Max. number of terminals (industry)

| Assembly with terminal | vertical | horizontal |
|---|---|---|
| 2.5 mm² | * | 1x22 |
| 4 mm² | * | |
| 6 mm² | | |
| 10 mm² | | |
| 16 mm² | | |

**Note** *Please refer to the Terminal Block Catalogue or the SAK Range for more information about populating the enclosures with terminal blocks. We recommend BK 6 or BK 6 CRN (0625220000) for vertical installations. There are no pre-defined mounting points set within this enclosure for installing internal equipment in a vertical position.

### Number of cable entries

| Number of cable entries | A / B | C / D |
|---|---|---|
| M12 | 6 | 1 |
| M16 | 5 | 1 |
| M20 | 4 | |
| M25 | | |
| M32 | | |
| M40 | | |
| M50 | | |
| M63 | | |

**Note** **Our IP 68 brass cable glands are used as the reference for these guideline values.

### Dimensions of mounting plate

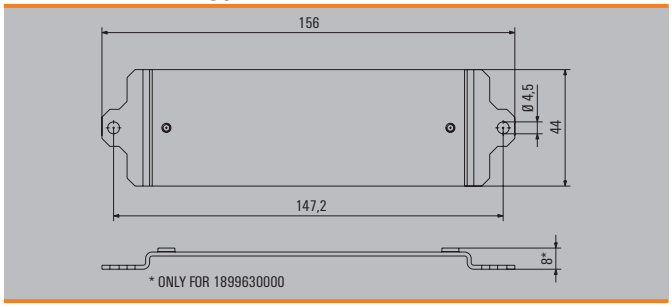

## Klippon® K 31

**Depth** 57 mm

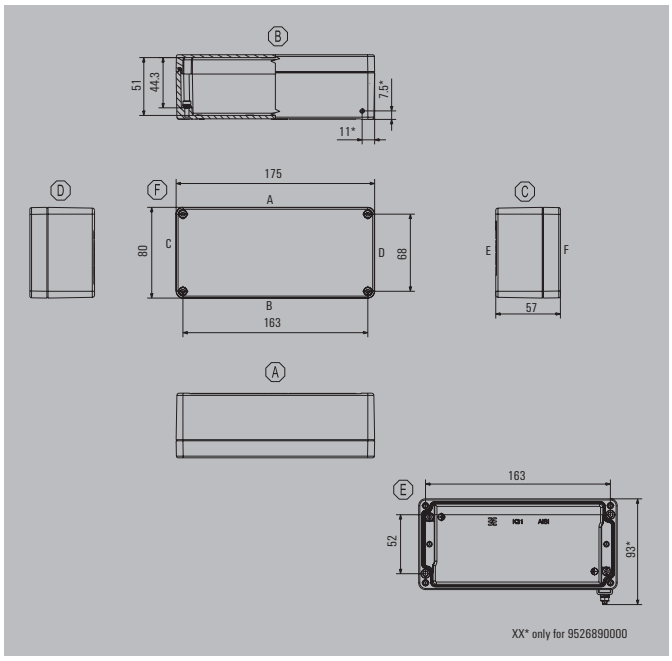


| Height/Width/Depth | 80 / 175 / 57 mm |
|---|---|

### Ordering data

| powder-coated (RAL 7001) | Order No. |
|---|---|
| Standard (CR seal) | 9529170000 |
| Standard (silicone seal)** | 1937820000 |
| **unpainted** | |
| Standard (CR seal) | 0573500000 |
| Ex enclosure (silicone seal) | 9526890000 |

**Note** The colours of painted enclosures may vary under certain circumstances. **Delivery time available on request.

### Accessories

| Terminal rail, Set | Order No. |
|---|---|
| 35 mm width | 1910040000 |
| **Mounting plate** | |
| Steel sheet, zinc plated | 3073040000 |
| **Hinge, diecast zinc, Set** | |
| | 1580360000 |
| **Torx® screwdriver** | |
| Uninsulated Torx® TH20 | 9009160000 |

**Note** The accessory sets contain the necessary mounting material. Necessary on use of 1 hinge per longitudinal side.

### Max. number of terminals (industry)

| Assembly with terminal | vertical | horizontal |
|---|---|---|
| 2.5 mm² | * | 1x23 |
| 4 mm² | * | 1x19 |
| 6 mm² | | |
| 10 mm² | | |
| 16 mm² | | |

**Note** *Please refer to the Terminal Block Catalogue or the SAK Range for more information about populating the enclosures with terminal blocks. We recommend BK 6 or BK 6 CRN (0625220000) for vertical installations. There are no pre-defined mounting points set within this enclosure for installing internal equipment in a vertical position.

### Number of cable entries

| Number of cable entries | A / B | C / D |
|---|---|---|
| M12 | 9 | 2 |
| M16 | 6 | 2 |
| M20 | 4 | 1 |
| M25 | 3 | |
| M32 | | |
| M40 | | |
| M50 | | |
| M63 | | |

**Note** **Our IP 68 brass cable glands are used as the reference for these guideline values.

### Dimensions of mounting plate

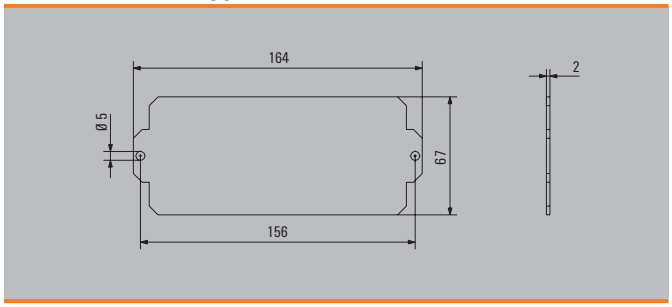

## Klippon® K 32

**Depth** 55 mm

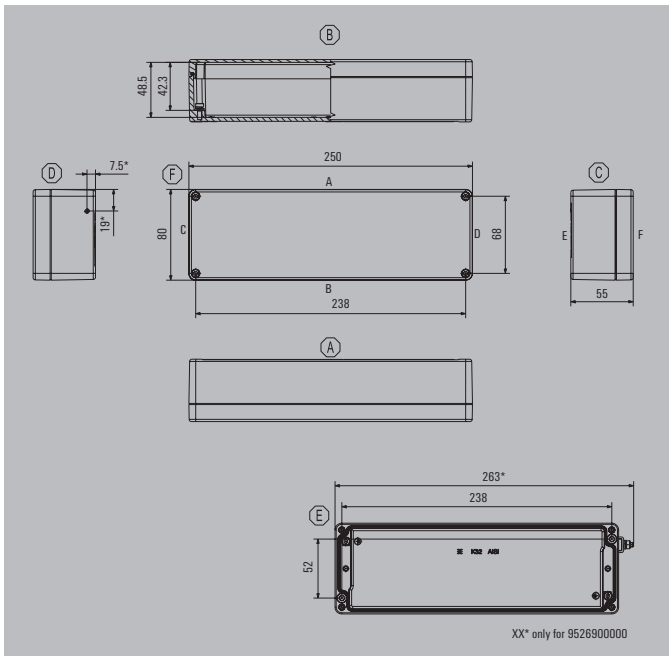


| Height/Width/Depth | 80 / 250 / 55 mm |
|---|---|

### Ordering data

| powder-coated (RAL 7001) | Order No. |
|---|---|
| Standard (CR seal) | 9529180000 |
| Standard (silicone seal)** | 1937810000 |
| **unpainted** | |
| Standard (CR seal) | 1565260000 |
| Ex enclosure (silicone seal) | 9526900000 |

**Note** The colours of painted enclosures may vary under certain circumstances. **Delivery time available on request.

### Accessories

| Terminal rail, Set | Order No. |
|---|---|
| 35 mm width | 1910050000 |
| **Mounting plate** | |
| Steel sheet, zinc plated | 3073050000 |
| **Torx® screwdriver** | |
| Uninsulated Torx® TH20 | 9009160000 |

**Note** The accessory sets contain the necessary mounting material.

### Max. number of terminals (industry)

| Assembly with terminal | vertical | horizontal |
|---|---|---|
| 2.5 mm² | * | 1x38 |
| 4 mm² | * | 1x32 |
| 6 mm² | | |
| 10 mm² | | |
| 16 mm² | | |

**Note** *Please refer to the Terminal Block Catalogue or the SAK Range for more information about populating the enclosures with terminal blocks. We recommend BK 6 or BK 6 CRN (0625220000) for vertical installations. There are no pre-defined mounting points set within this enclosure for installing internal equipment in a vertical position.

### Number of cable entries

| Number of cable entries | A / B | C / D |
|---|---|---|
| M12 | 15 | 2 |
| M16 | 9 | 2 |
| M20 | 7 | 1 |
| M25 | 6 | |
| M32 | | |
| M40 | | |
| M50 | | |
| M63 | | |

**Note** **Our IP 68 brass cable glands are used as the reference for these guideline values.

### Dimensions of mounting plate

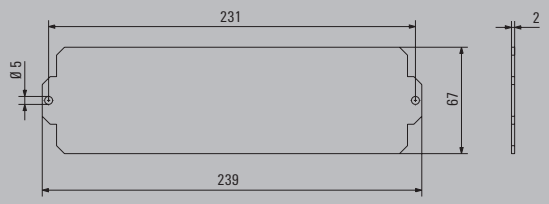

## Klippon® K 4

**Depth** 72 mm

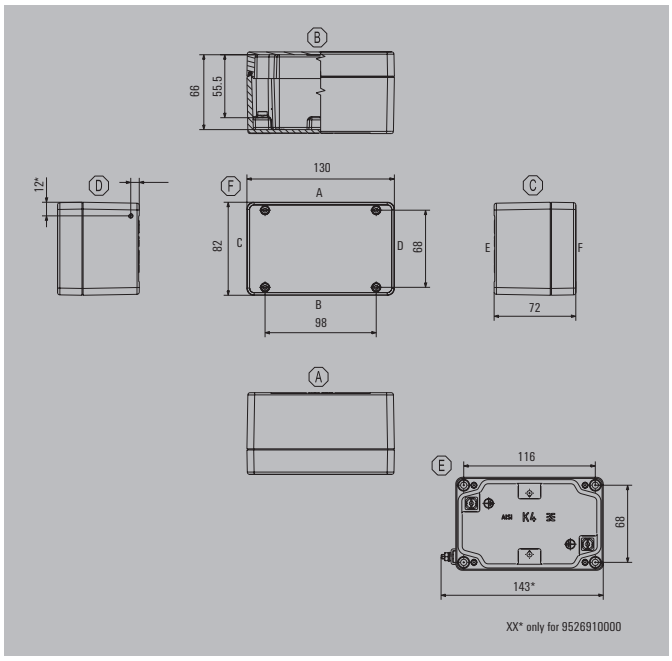


| Height/Width/Depth | 82 / 130 / 72 mm |
|---|---|

### Ordering data

| powder-coated (RAL 7001) | Order No. |
|---|---|
| Standard (CR seal) | 9529190000 |
| Standard (silicone seal)** | 1937890000 |
| **unpainted** | |
| Standard (CR seal) | 0342300000 |
| Ex enclosure (silicone seal) | 9526910000 |

**Note** The colours of painted enclosures may vary under certain circumstances. **Delivery time available on request.

### Accessories

| Terminal rail, Set | Order No. |
|---|---|
| 35 mm width | 1910060000 |
| **Mounting plate** | |
| Steel sheet, zinc plated | 3073060000 |
| **Hinge, diecast zinc, Set** | |
| | 1580360000 |
| **Torx® screwdriver** | |
| Uninsulated Torx® TH20 | 9009160000 |

**Note** Sets also contain the mounting material, if required. 1 hinge per longitudinal side

### Max. number of terminals (industry)

| Assembly with terminal | vertical | horizontal |
|---|---|---|
| 2.5 mm² | 1x5 | * |
| 4 mm² | 1x4 | * |
| 6 mm² | 1x3 | |
| 10 mm² | 1x2 | |
| 16 mm² | | |

**Note** The mounting rails are designed to be installed directly.
Assembly with terminals provides for 10 mm clearance to the ends of the mounting rail.
Ordering recommendations:
TS 35 mounting rail (screw-type terminals) WDU 2.5 1020000000 / (tension clamp terminals) ZDU 2.5 1608510000
*For fitting the enclosures with terminal blocks, please refer to the Terminal block catalogue or the SAK range. We recommend BK 6 or BK 6 CRN (0625220000) for horizontal installations.
There are no pre-defined mounting points set within this enclosure for installing internal equipment in a horizontal position.

### Number of cable entries

| Number of cable entries | A / B | C / D |
|---|---|---|
| M12 | 5 | 2 |
| M16 | 3 | 2 |
| M20 | 2 | 1 |
| M25 | 2 | 1 |
| M32 | | 1 |
| M40 | | |
| M50 | | |
| M63 | | |

**Note** **Our IP 68 brass cable glands are used as the reference for these guideline values.

### Dimensions of mounting plate

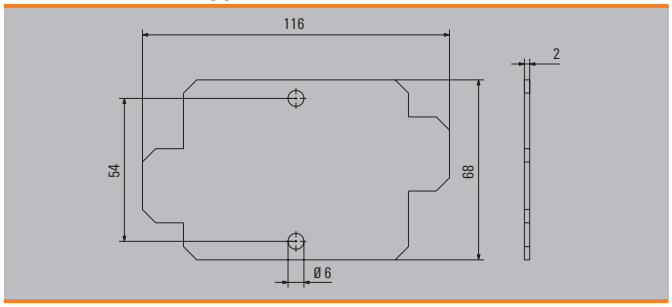

## Klippon® K 41

**Depth** 81 mm

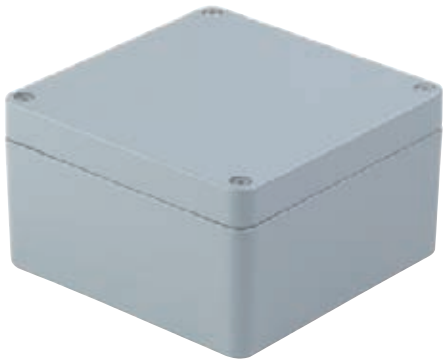

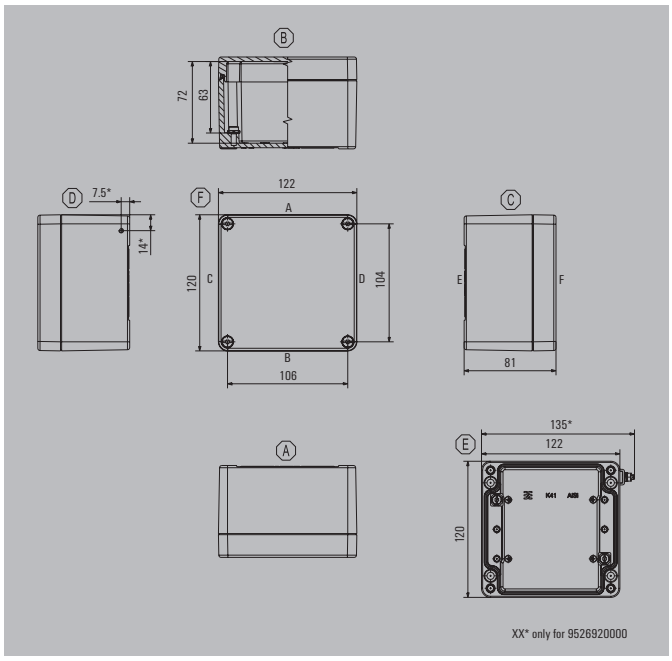


| Height/Width/Depth | 120 / 122 / 81 mm |
|---|---|

### Ordering data

| powder-coated (RAL 7001) | Order No. |
|---|---|
| Standard (CR seal) | 9529200000 |
| Standard (silicone seal)** | 1937800000 |
| **unpainted** | |
| Standard (CR seal) | 1565270000 |
| Ex enclosure (silicone seal) | 9526920000 |

**Note** The colours of painted enclosures may vary under certain circumstances. **Delivery time available on request.

### Accessories

| Terminal rail, Set | Order No. |
|---|---|
| 35 mm width | 1910070000 |
| **Earth bar, Set** | |
| | |
| **Mounting plate** | |
| Steel sheet, zinc plated | 3073070000 |
| **Hinge, diecast zinc, Set** | |
| | 1580360000 |
| **External mounting feet, set of 4** | |
| | 9527590000 |
| **Torx® screwdriver** | |
| Uninsulated Torx® TH20 | 9009160000 |

**Note** The accessory sets contain the necessary mounting material. Necessary on use of 1 hinge per longitudinal side.

### Max. number of terminals (industry)

| Assembly with terminal | vertical | horizontal |
|---|---|---|
| 2.5 mm² | * | 1x13 |
| 4 mm² | * | 1x11 |
| 6 mm² | | 1x8 |
| 10 mm² | | 1x6 |
| 16 mm² | | |

**Note** *Please refer to the Terminal Block Catalogue or the SAK Range for more information about populating the enclosures with terminal blocks. We recommend BK 6 or BK 6 CRN (0625220000) for vertical installations. There are no specified mounting options available for mounting the enclosure in a vertical position. There are no pre-defined mounting points set within this enclosure for installing internal equipment in a vertical position.

### Number of cable entries

| Number of cable entries | A / B | C / D |
|---|---|---|
| M12 | 6 | 4 |
| M16 | 6 | 4 |
| M20 | 3 | 2 |
| M25 | 2 | 1 |
| M32 | 1 | 1 |
| M40 | | |
| M50 | | |
| M63 | | |

**Note** **Our IP 68 brass cable glands are used as the reference for these guideline values.

### Dimensions of mounting plate

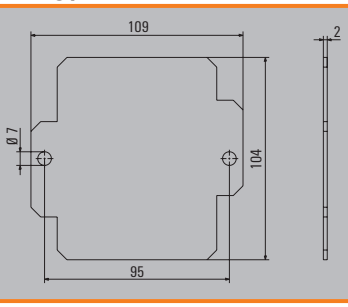

## Klippon® K 5

**Depth** 90 mm

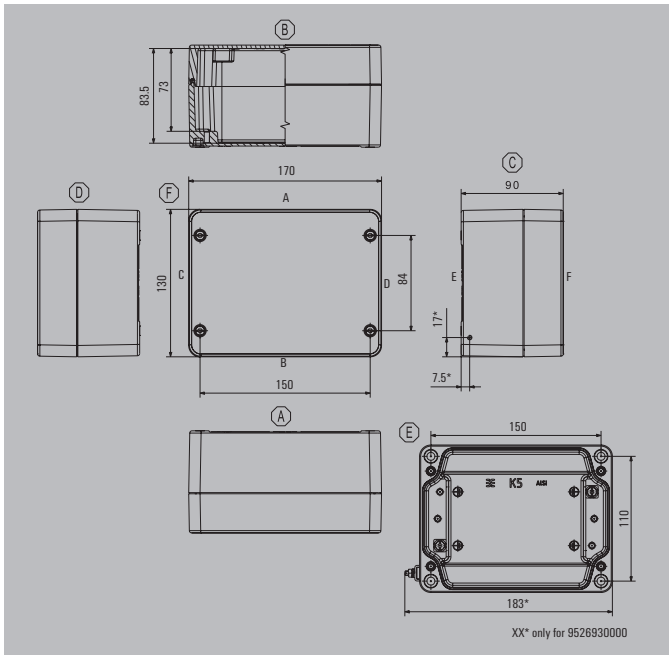


| Height/Width/Depth | 130 / 170 / 90 mm |
|---|---|

### Ordering data

| powder-coated (RAL 7001) | Order No. |
|---|---|
| Standard (CR seal) | 9529210000 |
| Standard (silicone seal)** | 1937860000 |
| **unpainted** | |
| Standard (CR seal) | 0342400000 |
| Ex enclosure (silicone seal) | 9526930000 |

**Note** The colours of painted enclosures may vary under certain circumstances. **Delivery time available on request.

### Accessories

| Terminal rail, Set | Order No. |
|---|---|
| 35 mm width | 1910080000 |
| **Earth bar, Set** | |
| | 9511220000 |
| **Mounting plate** | |
| Steel sheet, zinc plated | 3073080000 |
| **Hinge, diecast zinc, Set** | |
| | 1580360000 |
| **External mounting feet, set of 4** | |
| | 9529080000 |
| **Torx® screwdriver** | |
| Uninsulated Torx® TH20 | 9009160000 |

**Note** The accessory sets contain the necessary mounting material. Necessary on use of 1 hinge per longitudinal side.

### Max. number of terminals (industry)

| Assembly with terminal | vertical | horizontal |
|---|---|---|
| 2.5 mm² | * | 1x20 |
| 4 mm² | * | 1x16 |
| 6 mm² | | 1x12 |
| 10 mm² | | 1x10 |
| 16 mm² | | 1x8 |

**Note** The mounting rails are designed to be installed directly.
Assembly with terminals provides for 10 mm clearance to the ends of the mounting rail.
Ordering recommendations:
TS 35 mounting rail (screw-type terminals) WDU 2.5 1020000000 / (tension clamp terminals) ZDU 2.5 1608510000
*For fitting the enclosures with terminal blocks, please refer to the Terminal block catalogue or the SAK range. We recommend BK 6 or BK 6 CRN (0625220000) for vertical installations. There are no specified mounting options available for mounting the enclosure in a vertical position. There are no pre-defined mounting points set within this enclosure for installing internal equipment in a vertical position.

### Number of cable entries

| Number of cable entries | A / B | C / D |
|---|---|---|
| M12 | 11 | 4 |
| M16 | 8 | 2 |
| M20 | 4 | 1 |
| M25 | 3 | 1 |
| M32 | 2 | 1 |
| M40 | | |
| M50 | | |
| M63 | | |

**Note** **Our IP 68 brass cable glands are used as the reference for these guideline values.

### Dimensions of mounting plate

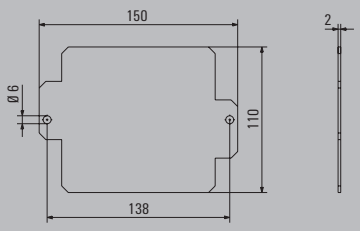

## Klippon® K 51

**Depth** 81 mm

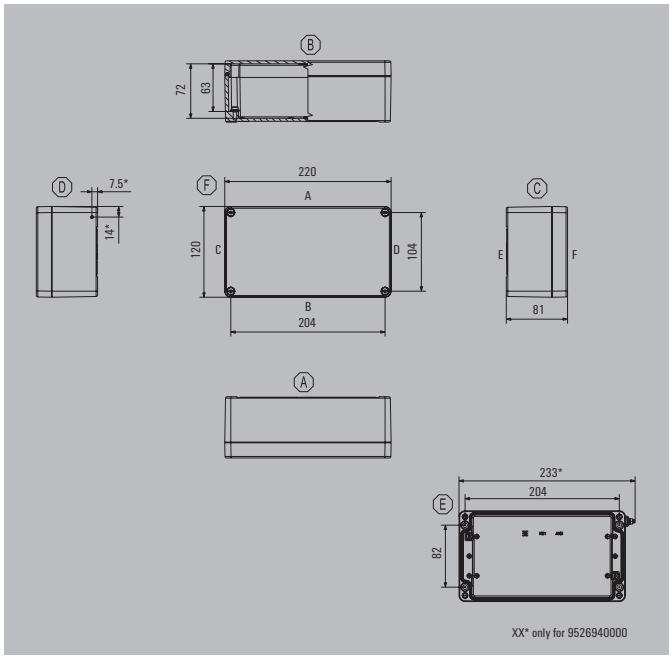


| Height/Width/Depth | 120 / 220 / 81 mm |
|---|---|

### Ordering data

| powder-coated (RAL 7001) | Order No. |
|---|---|
| Standard (CR seal) | 9529220000 |
| Standard (silicone seal)** | 1937750000 |
| **unpainted** | |
| Standard (CR seal) | 1565280000 |
| Ex enclosure (silicone seal) | 9526940000 |

**Note** The colours of painted enclosures may vary under certain circumstances. **Delivery time available on request.

### Accessories

| Terminal rail, Set | Order No. |
|---|---|
| 35 mm width | 1910090000 |
| **Earth bar, Set** | |
| | 9511210000 |
| **Mounting plate** | |
| Steel sheet, zinc plated | 3073090000 |
| **Hinge, diecast zinc, Set** | |
| | 1580360000 |
| **External mounting feet, set of 4** | |
| | 9527590000 |
| **Torx® screwdriver** | |
| Uninsulated Torx® TH20 | 9009160000 |

**Note** The accessory sets contain the necessary mounting material. Necessary on use of 2 hinges per longitudinal side.

### Max. number of terminals (industry)

| Assembly with terminal | vertical | horizontal |
|---|---|---|
| 2.5 mm² | * | 1x31 |
| 4 mm² | * | 1x26 |
| 6 mm² | | 1x19 |
| 10 mm² | | 1x15 |
| 16 mm² | | |

**Note** The mounting rails are designed to be installed directly.
Assembly with terminals provides for 10 mm clearance to the ends of the mounting rail.
Ordering recommendations:
TS 35 mounting rail (screw-type terminals) WDU 2.5 1020000000 / (tension clamp terminals) ZDU 2.5 1608510000
*For fitting the enclosures with terminal blocks, please refer to the Terminal block catalogue or the SAK range. We recommend BK 6 or BK 6 CRN (0625220000) for vertical installations. There are no pre-defined mounting points set within this enclosure for installing internal equipment in a vertical position.

### Number of cable entries

| Number of cable entries | A / B | C / D |
|---|---|---|
| M12 | 23 | 6 |
| M16 | 14 | 3 |
| M20 | 8 | 2 |
| M25 | 5 | 1 |
| M32 | 3 | 1 |
| M40 | 3 | |
| M50 | | |
| M63 | | |

**Note** **Our IP 68 brass cable glands are used as the reference for these guideline values.

### Dimensions of mounting plate

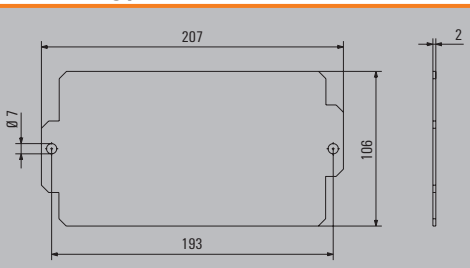

## Klippon® K 52

**Depth** 91 mm

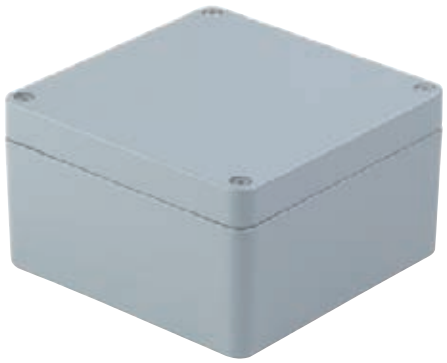

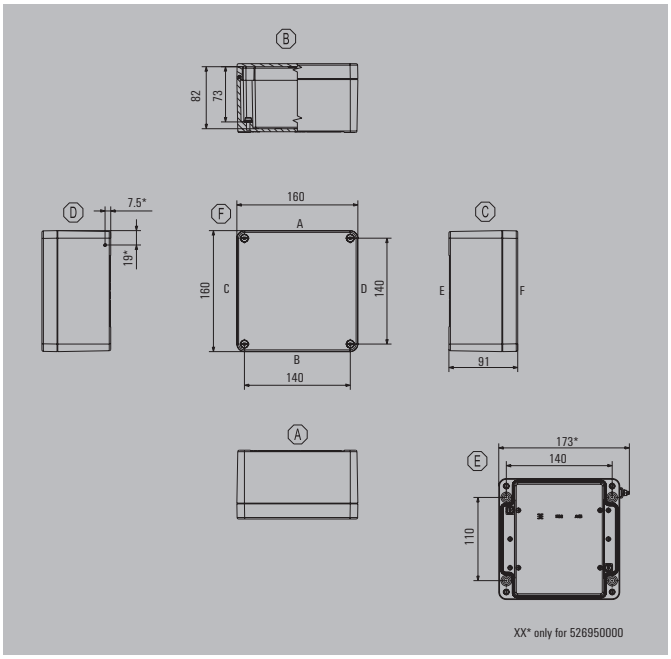


| Height/Width/Depth | 160 / 160 / 91 mm |
|---|---|

### Ordering data

| powder-coated (RAL 7001) | Order No. |
|---|---|
| Standard (CR seal) | 9529230000 |
| Standard (silicone seal)** | 1937740000 |
| **unpainted** | |
| Standard (CR seal) | 1565290000 |
| Ex enclosure (silicone seal) | 9526950000 |

**Note** The colours of painted enclosures may vary under certain circumstances. **Delivery time available on request.

### Accessories

| Terminal rail, Set | Order No. |
|---|---|
| 35 mm width | 1910100000 |
| **Earth bar, Set** | |
| | 9511220000 |
| **Mounting plate** | |
| Steel sheet, zinc plated | 3073100000 |
| **Hinge, diecast zinc, Set** | |
| | 1580360000 |
| **External mounting feet, set of 4** | |
| | 9527590000 |
| **Torx® screwdriver** | |
| Uninsulated Torx® TH20 | 9009160000 |

**Note** The accessory sets contain the necessary mounting material. Necessary on use of 1 hinge per longitudinal side.

### Max. number of terminals (industry)

| Assembly with terminal | vertical | horizontal |
|---|---|---|
| 2.5 mm² | * | 1x18 |
| 4 mm² | * | 1x15 |
| 6 mm² | | 1x11 |
| 10 mm² | | 1x9 |
| 16 mm² | | |

**Note** The mounting rails are designed to be installed directly.
Assembly with terminals provides for 10 mm clearance to the ends of the mounting rail.
Ordering recommendations:
TS 35 mounting rail (screw-type terminals) WDU 2.5 1020000000 / (tension clamp terminals) ZDU 2.5 1608510000
*For fitting the enclosures with terminal blocks, please refer to the Terminal block catalogue or the SAK range. We recommend BK 12 or BK 12 CRN (0625320000) for vertical installations.
There are no pre-defined mounting points set within this enclosure for installing internal equipment in a vertical position.

### Number of cable entries

| Number of cable entries | A / B | C / D |
|---|---|---|
| M12 | 14 | 8 |
| M16 | 8 | 5 |
| M20 | 5 | 3 |
| M25 | 3 | 2 |
| M32 | 2 | 1 |
| M40 | 1 | |
| M50 | | |
| M63 | | |

**Note** **Our IP 68 brass cable glands are used as the reference for these guideline values.

### Dimensions of mounting plate

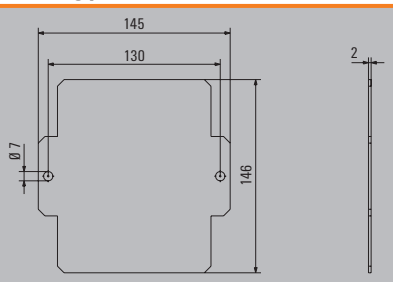

## Klippon® K 6

**Depth** 100 mm

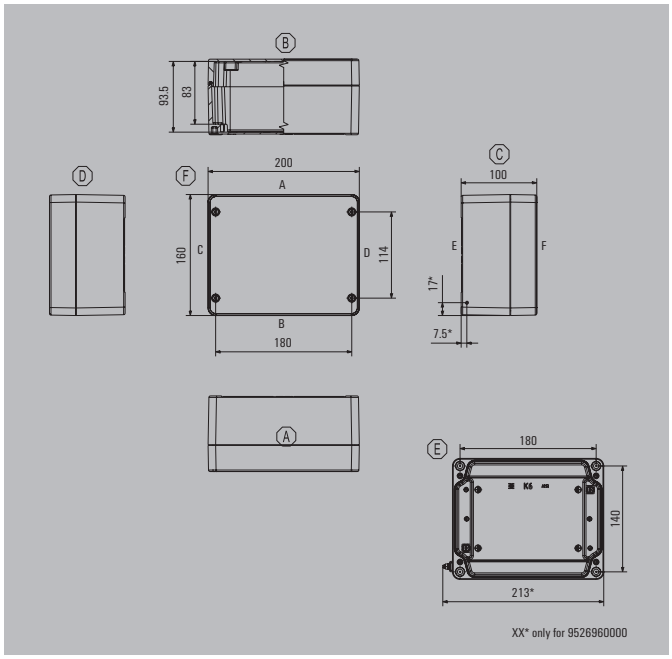


| | |
|---|---|
| Height/Width/Depth | 160 / 200 / 100 mm |

### Ordering data

| powder-coated (RAL 7001) | Order No. |
|---|---|
| Standard (CR seal) | 9529240000 |
| Standard (silicone seal)** | 1937870000 |
| **unpainted** | |
| Standard (CR seal) | 0342500000 |
| Ex enclosure (silicone seal) | 9526960000 |

**Note** The colours of painted enclosures may vary under certain circumstances. **Delivery time available on request.

### Accessories

| Terminal rail, Set | Order No. |
|---|---|
| 35 mm width | 1910110000 |
| **Earth bar, Set** | |
| | |
| **Mounting plate** | |
| Steel sheet, zinc plated | 3073110000 |
| **Hinge, diecast zinc, Set** | |
| | 1580360000 |
| **External mounting feet, set of 4** | |
| | 9529080000 |
| **Torx® screwdriver** | |
| Uninsulated Torx® TH20 | 9009160000 |

**Note** The accessory sets contain the necessary mounting material. Necessary on use of 2 hinges per longitudinal side.

### Max. number of terminals (industry)

| Assembly with terminal | vertical | horizontal |
|---|---|---|
| 2.5 mm² | * | 1x25 |
| 4 mm² | * | 1x21 |
| 6 mm² | | 1x15 |
| 10 mm² | | 1x12 |
| 16 mm² | | 1x10 |

**Note** The mounting rails are designed to be installed directly.
Assembly with terminals provides for 10 mm clearance to the ends of the mounting rail.
Ordering recommendations:
TS 35 mounting rail (screw-type terminals) WDU 2.5 1020000000 / (tension clamp terminals) ZDU 2.5 1608510000
*For fitting the enclosures with terminal blocks, please refer to the Terminal block catalogue or the SAK range. We recommend BK 12 or BK 12 CRN (0625320000) for vertical installations.
There are no pre-defined mounting points set within this enclosure for installing internal equipment in a vertical position.

### Number of cable entries

| Number of cable entries | A / B | C / D |
|---|---|---|
| M12 | 17 | 6 |
| M16 | 12 | 6 |
| M20 | 7 | 3 |
| M25 | 4 | 2 |
| M32 | 3 | 2 |
| M40 | 2 | 1 |
| M50 | | |
| M63 | | |

**Note** **Our IP 68 brass cable glands are used as the reference for these guideline values.

### Dimensions of mounting plate

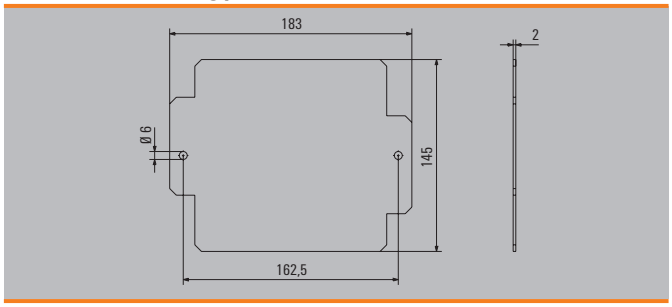

## Klippon® K 61

**Depth** **91 mm**

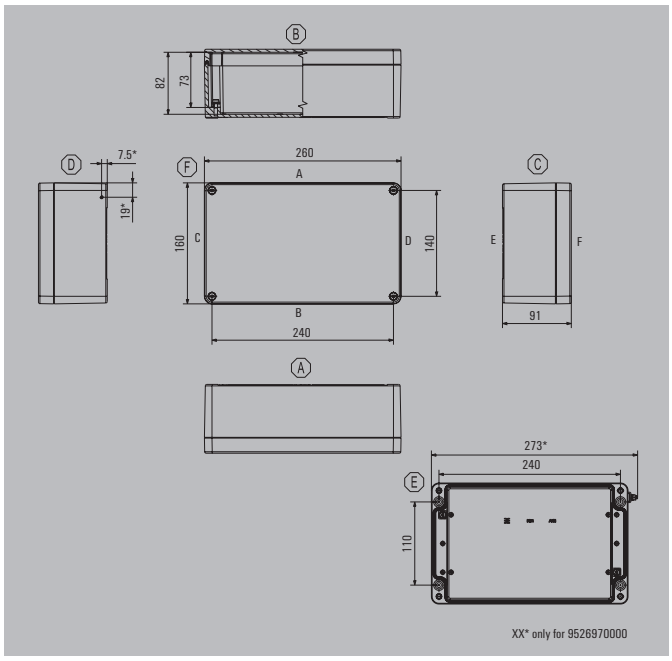


| Height/Width/Depth | 160 / 260 / 91 mm |
|---|---|

### Ordering data

| powder-coated (RAL 7001) | Order No. |
|---|---|
| Standard (CR seal) | 9529250000 |
| Standard (silicone seal)** | 1937730000 |
| **unpainted** | |
| Standard (CR seal) | 0573600000 |
| Ex enclosure (silicone seal) | 9526970000 |

**Note** The colours of painted enclosures may vary under certain circumstances. **Delivery time available on request.

### Accessories

| Terminal rail, Set | Order No. |
|---|---|
| 35 mm width | 1910120000 |
| **Earth bar, Set** | |
| | 9511230000 |
| **Mounting plate** | |
| Steel sheet, zinc plated | 3073120000 |
| **Hinge, diecast zinc, Set** | |
| | 1580360000 |
| **External mounting feet, set of 4** | |
| | 9527590000 |
| **Torx® screwdriver** | |
| Uninsulated Torx® TH20 | 9009160000 |

**Note** The accessory sets contain the necessary mounting material. Necessary on use of 2 hinges per longitudinal side.

### Max. number of terminals (industry)

| Assembly with terminal | vertical | horizontal |
|---|---|---|
| 2.5 mm² | * | 1x38 |
| 4 mm² | * | 1x32 |
| 6 mm² | | 1x24 |
| 10 mm² | | 1x19 |
| 16 mm² | | 1x16 |

**Note** The mounting rails are designed to be installed directly.
Assembly with terminals provides for 10 mm clearance to the ends of the mounting rail.
Ordering recommendations:
TS 35 mounting rail (screw-type terminals) WDU 2.5 1020000000 / (tension clamp terminals) ZDU 2.5 1608510000
*For fitting the enclosures with terminal blocks, please refer to the Terminal block catalogue or the SAK range. We recommend BK 12 or BK 12 CRN (0625320000) for vertical installations.
There are no pre-defined mounting points set within this enclosure for installing internal equipment in a vertical position.

### Number of cable entries

| Number of cable entries | A / B | C / D |
|---|---|---|
| M12 | 27 | 8 |
| M16 | 23 | 6 |
| M20 | 13 | 3 |
| M25 | 8 | 2 |
| M32 | 4 | 1 |
| M40 | 3 | 1 |
| M50 | | |
| M63 | | |

**Note** **Our IP 68 brass cable glands are used as the reference for these guideline values.

### Dimensions of mounting plate

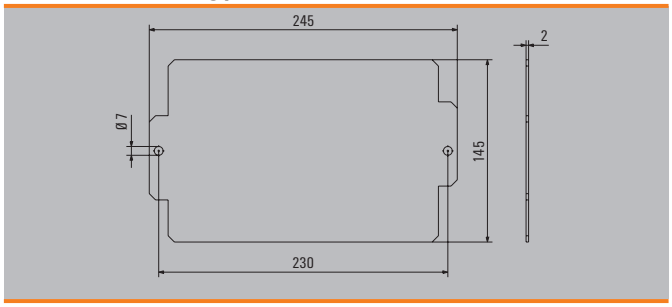

## Klippon® K 7

**Depth** 100 mm

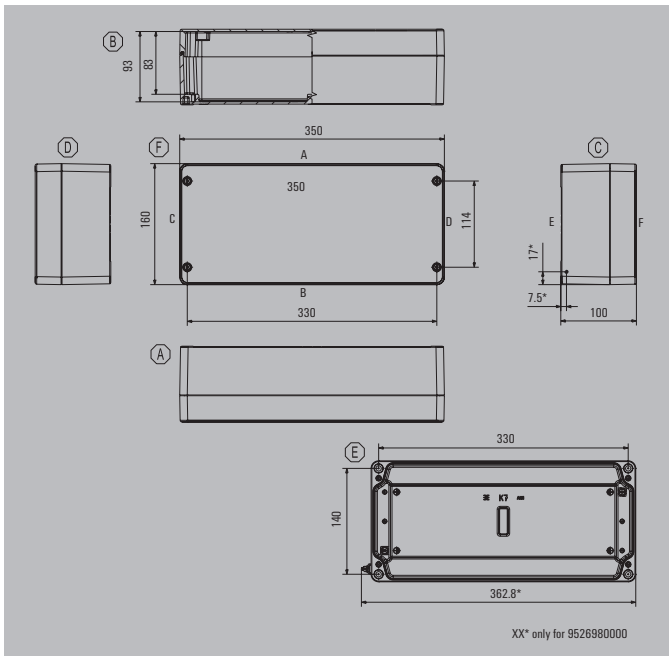


| Height/Width/Depth | 160 / 350 / 100 mm |
|---|---|

### Ordering data

| powder-coated (RAL 7001) | Order No. |
|---|---|
| Standard (CR seal) | 9529260000 |
| Standard (silicone seal)** | 1937880000 |
| **unpainted** | |
| Standard (CR seal) | 0342600000 |
| Ex enclosure (silicone seal) | 9526980000 |

**Note** The colours of painted enclosures may vary under certain circumstances. **Delivery time available on request.

### Accessories

| Terminal rail, Set | Order No. |
|---|---|
| 35 mm width | 1910130000 |
| **Earth bar, Set** | |
| | |
| **Mounting plate** | |
| Steel sheet, zinc plated | 3073130000 |
| **Hinge, diecast zinc, Set** | |
| | 1580360000 |
| **External mounting feet, set of 4** | |
| | 9529080000 |
| **Torx® screwdriver** | |
| Uninsulated Torx® TH20 | 9009160000 |

**Note** The accessory sets contain the necessary mounting material. Necessary on use of 2 hinges per longitudinal side.

### Max. number of terminals (industry)

| Assembly with terminal | vertical | horizontal |
|---|---|---|
| 2.5 mm² | * | 1x55 |
| 4 mm² | * | 1x46 |
| 6 mm² | | 1x34 |
| 10 mm² | | 1x27 |
| 16 mm² | | 1x23 |

**Note** The mounting rails are designed to be installed directly.
Assembly with terminals provides for 10 mm clearance to the ends of the mounting rail.
Ordering recommendations:
TS 35 mounting rail (screw-type terminals) WDU 2.5 1020000000 / (tension clamp terminals) ZDU 2.5 1608510000
*For fitting the enclosures with terminal blocks, please refer to the Terminal block catalogue or the SAK range. We recommend BK 12 or BK 12 CRN (0625320000) for vertical installations.
There are no pre-defined mounting points set within this enclosure for installing internal equipment in a vertical position.

### Number of cable entries

| Number of cable entries | A / B | C / D |
|---|---|---|
| M12 | 42 | 8 |
| M16 | 26 | 6 |
| M20 | 17 | 3 |
| M25 | 10 | 2 |
| M32 | 6 | 2 |
| M40 | 5 | 1 |
| M50 | | |
| M63 | | |

**Note** **Our IP 68 brass cable glands are used as the reference for these guideline values.

### Dimensions of mounting plate

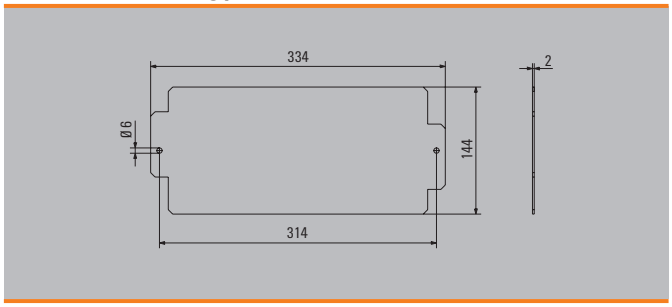

## Klippon® K 71

**Depth 111 mm**

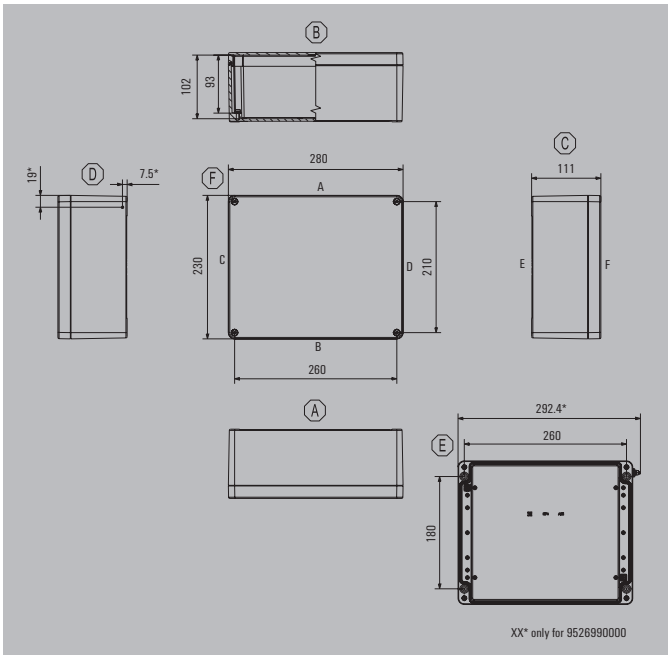


| | |
|---|---|
| Height/Width/Depth | 230 / 280 / 111 mm |

### Ordering data

| powder-coated (RAL 7001) | Order No. |
|---|---|
| Standard (CR seal) | 9529270000 |
| Standard (silicone seal)** | 1937720000 |
| **unpainted** | |
| Standard (CR seal) | 0573700000 |
| Ex enclosure (silicone seal) | 9526990000 |

**Note** The colours of painted enclosures may vary under certain circumstances. **Delivery time available on request.

### Accessories

| Terminal rail, Set | Order No. |
|---|---|
| 35 mm width | 1910140000 |
| **Earth bar, Set** | |
| | 9511190000 |
| **Mounting plate** | |
| Steel sheet, zinc plated | 3073140000 |
| **Hinge, diecast zinc, Set** | |
| | 1580360000 |
| **External mounting feet, set of 4** | |
| | 9527590000 |
| **Torx® screwdriver** | |
| Uninsulated Torx® TH20 | 9009160000 |

**Note** The accessory sets contain the necessary mounting material. Necessary on use of 2 hinges per longitudinal side.

### Max. number of terminals (industry)

| Assembly with terminal | vertical | horizontal |
|---|---|---|
| 2.5 mm² | * | 2x42 |
| 4 mm² | * | 2x35 |
| 6 mm² | | 2x26 |
| 10 mm² | | 2x21 |
| 16 mm² | | |

**Note** The mounting rails are designed to be installed directly.
Assembly with terminals provides for 10 mm clearance to the ends of the mounting rail.
Ordering recommendations:
TS 35 mounting rail (screw-type terminals) WDU 2.5 1020000000 / (tension clamp terminals) ZDU 2.5 1608510000
*For fitting the enclosures with terminal blocks, please refer to the Terminal block catalogue or the SAK range. We recommend BK 12 or BK 12 CRN (0625320000) for vertical installations.
There are no pre-defined mounting points set within this enclosure for installing internal equipment in a vertical position.

### Number of cable entries

| Number of cable entries | A / B | C / D |
|---|---|---|
| M12 | 42 | 28 |
| M16 | 30 | 18 |
| M20 | 21 | 10 |
| M25 | 12 | 8 |
| M32 | 10 | 3 |
| M40 | 4 | 2 |
| M50 | 3 | 2 |
| M63 | | |

**Note** **Our IP 68 brass cable glands are used as the reference for these guideline values.

### Dimensions of mounting plate

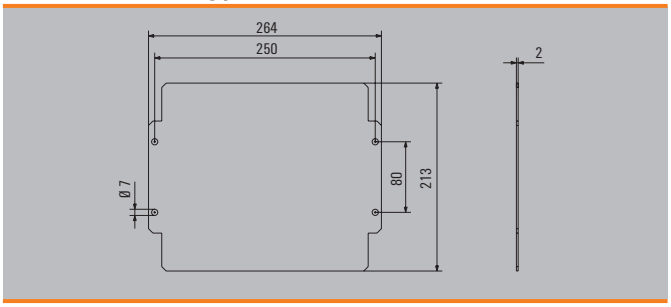

# Standardised distribution boxes – Product overview: Aluminium enclosure

Use the product overview to find the right solution for you! Combine your own industrial version consisting of an enclosure, with or without threaded holes, a suitable mounting rail or pre-fitted terminal strips. The compatible components are always shown in a row.

Distribution boxes with Ex protection for use in explosive areas can be found in the last column. They come with threaded holes and are already equipped with a terminal strip.

## Aluminium enclosure, uncoated

Empty enclosure without threaded holes

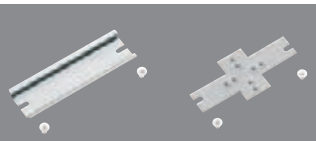

Mounting rail (TS)
Mounting plate (MOPL)

| Dimensions of the enclosure height x width x depth mm | Enclosure type | Order No. | Qty. | Type | Length mm | Rail mounting slot dimensions mm | Order No. | Qty. |
|---|---|---|---|---|---|---|---|---|
| **Aluminium, uncoated** | | | | | | | | |
| **64 x 58 x 34** | Klippon® K01 | **1565240000** | 10 | - | - | - | **–** | - |
| **70 x 70 x 45** | Klippon® K1 | **0342000000** | 10 | TS15 | 60 | 4.5 x 20 | **1909980000** | 1 |
| | | | | MOPL | 59 | 4.2 x 14 | **8000004495** | 1 |
| **80 x 75 x 57** | Klippon® K11 | **0573300000** | 10 | TS15 | 64 | 4.5 x 20 | **1909990000** | 1 |
| **70 x 100 x 45** | Klippon® K2 | **0342100000** | 10 | TS15 | 90 | 4.5 x 20 | **1910010000** | 1 |
| | | | | MOPL | 89 | 4.2 x 14 | **8000004496** | 1 |
| **80 x 125 x 57** | Klippon® K21 | **0573400000** | 5 | TS15 | 114 | 4.5 x 20 | **1910020000** | 1 |
| **70 x 165 x 45** | Klippon® K3 | **0342200000** | 5 | TS15 | 155 | 4.5 x 20 | **1910030000** | 1 |
| | | | | MOPL | 154 | 4.2 x 14 | **8000004497** | 1 |
| **80 x 175 x 57** | Klippon® K31 | **0573500000** | 5 | TS15 | 164 | 4.5 x 20 | **1910040000** | 1 |
| **82 x 130 x 72** | Klippon® K4 | **0342300000** | 1 | TS35 | 64 | 5.5 x 20 | **1910060000** | 1 |
| **120 x 122 x 81** | Klippon® K41 | **1565270000** | 1 | TS35 | 105 | 6.3 x 20 | **1910070000** | 1 |
| **130 x 170 x 90** | Klippon® K5 | **0342400000** | 1 | TS35 | 148 | 5.5 x 20 | **1910080000** | 1 |
| **160 x 160 x 91** | Klippon® K52 | **1565290000** | 1 | TS35 | 140 | 6.3 x 20 | **1910100000** | 1 |
| | | protection class IP 66 | | suitable for the enclosures of the respective line | | | | |

[1] Multi-pole terminal strip (terminal block BK 4, BK 6 or BK 12), mounted on mounting plate
[2] Space for further threaded holes up to M40

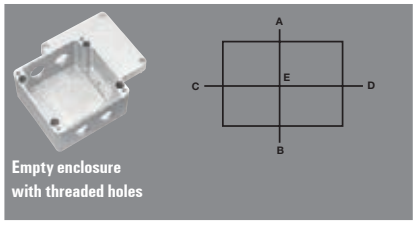


Empty enclosure with threaded holes

Terminal strip

Ex protected distribution box

| Threaded hole Side A | Threaded hole Side B | Order No. | Qty. | Connection technology | Cross-section mm² | Number of DU* | Number of PE* | Order No. | Qty. | Order No. |
|---|---|---|---|---|---|---|---|---|---|---|
| 1x M16 | 1x M16 | 8000004184 | 1 | Screw connection | 4 | 4 | 0 | 7906080000 | 100 | – |
| 1x M16 | 2x M16 | 8000004147 | 1 | Screw connection | 4 | 4 | 0 | 8000004129[1] | 1 | 8000004202 |
| 1x M20 | 1x M20 | 8000004148 | 1 | | | | | | | 8000004203 |
| 2x M16 | 2x M16 | 8000004149 | 1 | Screw connection | 4 | 5 | 2 | 8000004131 | 1 | 8000004207 |
| 2x M20 | 2x M20 | 8000004150 | 1 | Tension clamp connection | 2.5 | 5 | 1 | 8000004130 | 1 | 8000004208 |
| 2x M16 | 2x M16 | | | Tension clamp connection | 2.5 | 5 | 1 | | | |
| 2x M20 | 2x M20 | | | Screw connection | 4 | 5 | 2 | | | 8000004209 |
| 2x M20 | 2x M20 | 8000004151 | 1 | Screw connection | 4 | 6 | 0 | 8000004132[1] | 1 | 8000004210 |
| 3x M16 | 3x M16 | 8000004152 | 1 | Screw connection | 4 | 13 | 2 | 8000004134 | 1 | 8000004212 |
| 3x M16 | 3x M16 | | | Tension clamp connection | 2.5 | 14 | 2 | 8000004133 | 1 | 8000004211 |
| 4x M20 | 4x M20 | 8000004153 | 1 | Screw connection | 4 | 12 | 0 | 8000004135[1] | 1 | |
| 4x M20 | 4x M20 | 8000004154 | 1 | Screw connection | 4 | 21 | 2 | 8000004137 | 1 | 8000004215 |
| 4x M20 | 4x M20 | | | Tension clamp connection | 2.5 | 24 | 2 | 8000004136 | 1 | 8000004214 |
| 2x M20 | 2x M20 | 8000004155 | 1 | Screw connection | 4 | 5 | 2 | 8000004138 | 1 | |
| 2x M20 | 2x M20 | | | Tension clamp connection | 4 | 4 | 1 | 8000004139 | 1 | 8000004217 |
| 2x M25 | 2x M25 | 8000003446 | 1 | Screw connection | 4 | 12 | 2 | 8000003444 | 1 | 8000003589 |
| 3x M20 | 3x M20 | 8000003447 | 1 | Tension clamp connection | 4 | 9 | 2 | 8000003445 | 1 | |
| 2x M25 | 2x M25 | | | Tension clamp connection | 4 | 9 | 2 | | | |
| 3x M20 | 3x M20 | | | Screw connection | 4 | 12 | 2 | | | 8000003591 |
| 4x M20 | 4x M20 | 8000004158 | 1 | Screw connection | 4 | 17 | 2 | 8000004140 | 1 | 8000004218 |
| 4x M20 | 4x M20 | | | Tension clamp connection | 4 | 15 | 2 | 8000004141 | 1 | |
| 4x M20 | 4x M20 | 8000004159[2] | 1 | Screw connection | 4 | 16 | 2 | 8000004142 | 1 | 8000004220 |
| 4x M20 | 4x M20 | | | Tension clamp connection | 2.5 | 19 | 2 | 8000004143 | 1 | 8000004221 |

suitable for the enclosure of the respective line
*DU = feed-through terminals, PE = PE terminals

Ex-enclosure with threaded holes and terminal strip according to the respective line

## Klippon® K01

**34 mm**

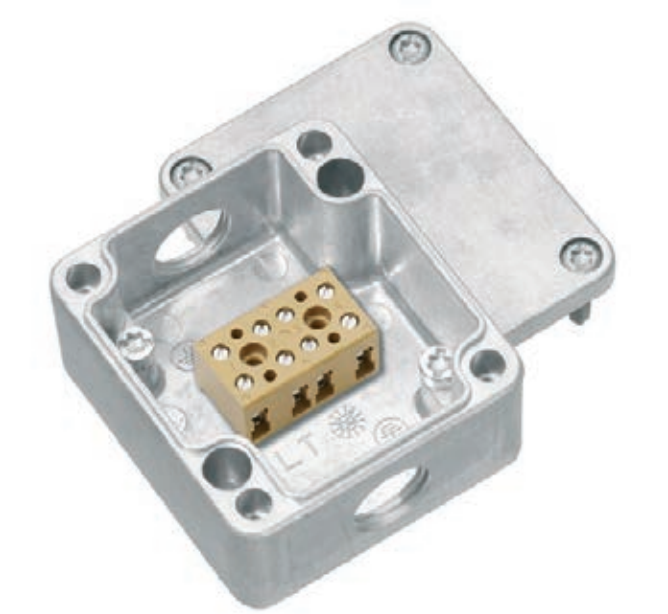

| Height / Width / Depth | 64 / 58 / 34 mm |
|---|---|

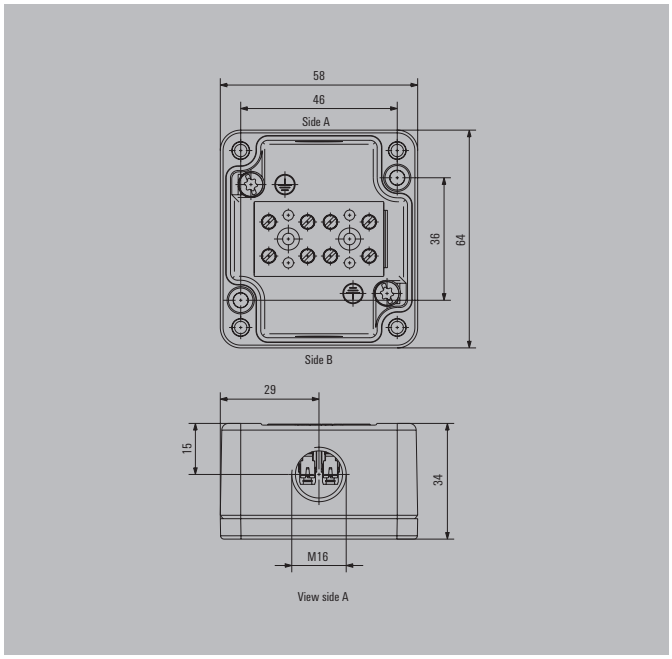


### Accessories

| Stopping plugs | | Order No. |
|---|---|---|
| | KSPM M16 PL | 1209890000 |
| | VP M16-EXE MS | 1737140000 |

### Empty enclosure with tapped holes

| | Drill holes side A | Drill holes side B | Order No. |
|---|---|---|---|
| | 1 x M16x1.5 | 1 x M16x1.5 | 8000004184 |

**Note** All enclosures are natural finish (unpainted).

**Note** You can find markers and labels in the Terminal Block Catalogue. Wall-mounting options can be found in Chapter B under Klippon® K

### Terminal block, suitable for empty enclosure

| | Type of connection | Type | Conductor can be clamped | Rated cross-section | No. of DU* | No. of PE* | Order No. |
|---|---|---|---|---|---|---|---|
| | Screw connection | BK 4/E | Solid / stranded<br>Flexible / flexible with wire-end ferrule | 0.5...4 mm² / 1.5...4 mm²<br>0.5...4 mm² / 0.5...4 mm² | | | 7906080000 |

**Note** *DU = feed-through terminals, PE = PE terminals

## Klippon® K1

**45 mm**

| Height / Width / Depth | 70 / 70 / 45 mm |
|---|---|

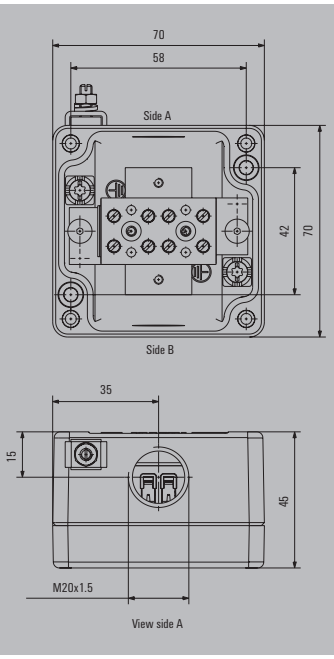


### Accessories

| Cable glands | Order No. |
|---|---|
| KSG M20 BN 0 NI 2 G20 | 1911560000 |

| Stopping plugs | |
|---|---|
| KSPM M16 PL | 1209890000 |
| KSPM M20 PL | 1209910000 |
| VP M16-EXE MS | 1737140000 |
| VP M20-EXE MS | 1737150000 |

### Empty enclosure with tapped holes

| Drill holes side A | Drill holes side B | Order No. |
|---|---|---|
| 1 x M16x1.5 | 2 x M16x1.5 | 8000004147 |
| 1 x M20x1.5 | 1 x M20x1.5 | 8000004148 |

**Note** All enclosures are natural finish (unpainted).

**Note** You can find markers and labels in the Terminal Block Catalogue. Wall-mounting options can be found in Chapter B under Klippon® K

### Terminal block, suitable for empty enclosure

| Type | Type of connection | Conductor can be clamped | Rated cross-section | No. of DU* | No. of PE* | Order No. |
|---|---|---|---|---|---|---|
| BK 4/E | Screw connection | Solid / stranded | 0.5...4 mm² / 1.5...4 mm² | 4 | 0 | 8000004129 |
| | | Flexible / flexible with wire-end ferrule | 0.5...4 mm² / 0.5...4 mm² | | | |

**Note** Supplied with mounting screws.
*DU = feed-through terminals, PE = PE terminals

### Distribution box with ATEX II 2GD T85°C Ex e II T6

| Drill holes side A | Drill holes side B | No. of DU* | No. of PE* | Order No. |
|---|---|---|---|---|
| 1 x M16x1.5 | 2 x M16x1.5 | 4 | 0 | 8000004202 |
| 1 x M20x1.5 | 1 x M20x1.5 | 4 | 0 | 8000004203 |

**Note** All enclosures are equipped with an external earth stud connection.
*DU = feed-through terminals, PE = PE terminals

### Terminal rail / mounting plate set

| Product type | Type | Length | Order No. |
|---|---|---|---|
| Mounting plate | MOPL K1 BKVARIO SET | 59 mm | 8000004495 |
| Mounting rail | TS15 60 KLippon K1 CSS | 60 mm | 1909980000 |

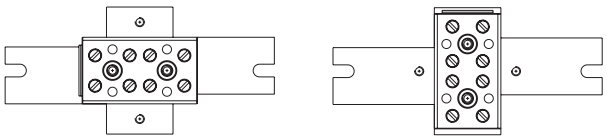

**Note** Supplied with mounting screws for the mounting rail or mounting plate

## Klippon® K11

**57 mm**

| Height / Width / Depth | 80 / 75 / 57 mm |
|---|---|

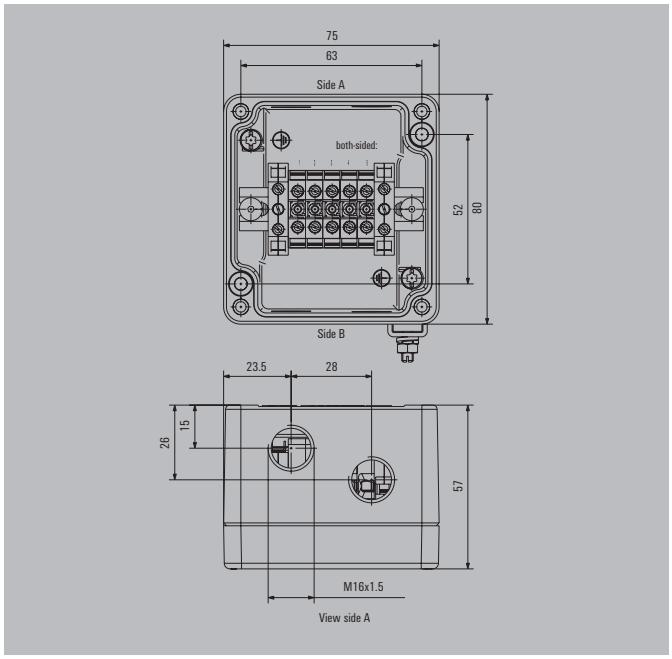


### Accessories

| Cable glands | Order No. |
|---|---|
| KSG M20 BN 0 NI 2 G20 | 1911560000 |
| | |
| | |
| **Stopping plugs** | |
| KSPM M16 PL | 1209890000 |
| KSPM M20 PL | 1209910000 |
| VP M16-EXE MS | 1737140000 |
| VP M20-EXE MS | 1737150000 |
| **Adapters** | |
| ADAP EX M20-M16 | 1737560000 |
| | |
| | |

### Empty enclosure with tapped holes

| Drill holes side A | Drill holes side B | Order No. |
|---|---|---|
| 2 x M16x1.5 | 2 x M16x1.5 | 8000004149 |
| 2 x M20x1.5 | 2 x M20x1.5 | 8000004150 |

**Note** All enclosures are natural finish (unpainted).

**Note** You can find markers and labels in the Terminal Block Catalogue. Wall-mounting options can be found in Chapter B under Klippon® K

### Terminal block, suitable for empty enclosure

| Type | Type of connection | Conductor can be clamped | Rated cross-section | No. of DU* | No. of PE* | Order No. |
|---|---|---|---|---|---|---|
| AKZ 4 | Screw connection | Solid / stranded<br>Flexible / flexible with wire-end ferrule | 0.5...6 mm² / 1.5...4 mm²<br>0.5...4 mm² / 0.5...2.5 mm² | 5 | 2 | 8000004131 |
| ZDUA 2.5-2 | Tension clamp connection | Solid / stranded<br>Flexible / flexible with wire-end ferrule | 0.5...4 mm² / ...<br>0.5...2.5 mm² / 0.5...1.5 mm² | 5 | 1 | 8000004130 |

**Note** Markers numbered 1-50 (horizontal text) and mounting screws are included in the delivery.
*DU = feed-through terminals, PE = PE terminals

### Distribution box with ATEX II 2GD T85°C Ex e II T6

| Drill holes side A | Drill holes side B | No. of DU* | No. of PE* | Order No. |
|---|---|---|---|---|
| 2 x M16x1.5 | 2 x M16x1.5 | 5 | 2 | 8000004207 |
| 2 x M16x1.5 | 2 x M16x1.5 | 5 | 1 | 8000004204 |
| 2 x M20x1.5 | 2 x M20x1.5 | 5 | 2 | 8000004209 |
| 2 x M20x1.5 | 2 x M20x1.5 | 5 | 1 | 8000004208 |

**Note** All enclosures are equipped with an external earth stud connection.
*DU = feed-through terminals, PE = PE terminals

### Terminal rail / mounting plate set

| Product type | Type | Length | Order No. |
|---|---|---|---|
| Mounting rail | TS15 64 Klippon K11 | 64 mm | 1909990000 |

**Note** Supplied with mounting screws for the mounting rail or mounting plate

## Klippon® K2

**45 mm**

| Height / Width / Depth | 70 / 100 / 45 mm |
|---|---|

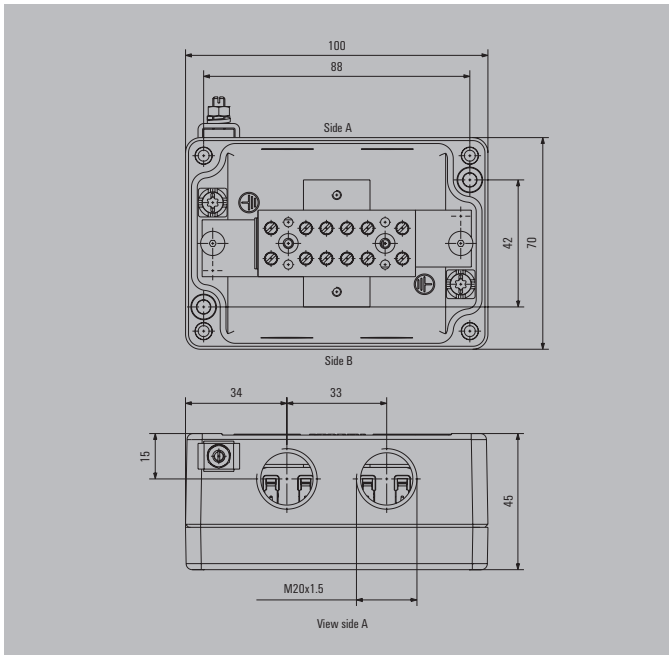


### Accessories

| Cable glands | Order No. |
|---|---|
| KSG M20 BN 0 NI 2 G20 | 1911560000 |
| **Stopping plugs** | |
| KSPM M20 PL | 1209910000 |
| VP M20-EXE MS | 1737150000 |
| **Adapters** | |
| ADAP EX M20-M16 | 1737560000 |

### Empty enclosure with tapped holes

| Drill holes side A | Drill holes side B | Order No. |
|---|---|---|
| 2 x M20x1.5 | 2 x M20x1.5 | 8000004151 |

**Note** All enclosures are natural finish (unpainted).

**Note** You can find markers and labels in the Terminal Block Catalogue. Wall-mounting options can be found in Chapter B under Klippon® K

### Terminal block, suitable for empty enclosure

| Type | Type of connection | Conductor can be clamped | Rated cross-section | No. of DU* | No. of PE* | Order No. |
|---|---|---|---|---|---|---|
| BK 6/E | Screw connection | Solid / stranded | 0.5...4 mm² / 1.5...4 mm² | 6 | 0 | 8000004132 |
| | | Flexible / flexible with wire-end ferrule | 0.5...4 mm² / 0.5...4 mm² | | | |

**Note** Supplied with mounting screws.
*DU = feed-through terminals, PE = PE terminals

### Distribution box with ATEX II 2GD T85°C Ex e II T6

| Drill holes side A | Drill holes side B | No. of DU* | No. of PE* | Order No. |
|---|---|---|---|---|
| 2 x M20x1.5 | 2 x M20x1.5 | 6 | 0 | 8000004210 |

**Note** All enclosures are equipped with an external earth stud connection.
*DU = feed-through terminals, PE = PE terminals

### Terminal rail / mounting plate set

| Product type | Type | Length | Order No. |
|---|---|---|---|
| Mounting plate | MOPL K2 BKVARIO SET | 89 mm | 8000004496 |
| Mounting rail | TS15 90 KLippon K2 CSS | 90 mm | 1910010000 |

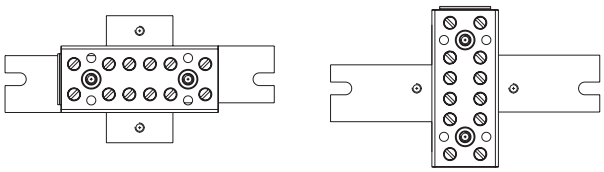

**Note** Supplied with mounting screws for the mounting rail or mounting plate

## Klippon® K21

57 mm

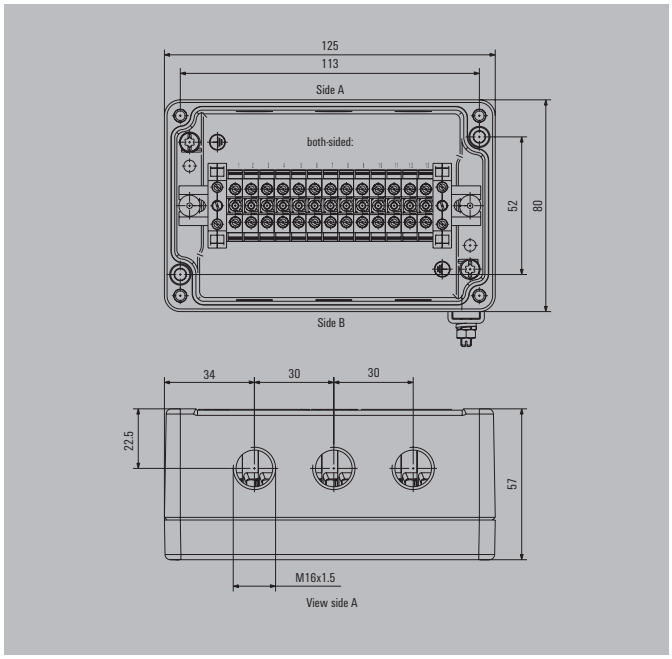


| Height / Width / Depth | 80 / 125 / 57 mm |
|---|---|

### Accessories

| Stopping plugs | | Order No. |
|---|---|---|
| | KSPM M16 PL | 1209890000 |
| | VP M16-EXE MS | 1737140000 |

### Empty enclosure with tapped holes

| | Drill holes side A | Drill holes side B | Order No. |
|---|---|---|---|
| | 3 x M16x1.5 | 3 x M16x1.5 | 8000004152 |

**Note** All enclosures are natural finish (unpainted).

**Note** You can find markers and labels in the Terminal Block Catalogue. Wall-mounting options can be found in Chapter B under Klippon® K

### Terminal block, suitable for empty enclosure

| | Type | Type of connection | Conductor can be clamped | Rated cross-section | No. of DU* | No. of PE* | Order No. |
|---|---|---|---|---|---|---|---|
| | AKZ 4 | Screw connection | Solid / stranded<br>Flexible / flexible with wire-end ferrule | 0.5...6 mm² / 1.5...4 mm²<br>0.5...4 mm² / 0.5...2.5 mm² | 13 | 2 | 8000004134 |
| | ZDUA 2.5-2 | Tension clamp connection | Solid / stranded<br>Flexible / flexible with wire-end ferrule | 0.5...4 mm² / ...<br>0.5...2.5 mm² / 0.5...1.5 mm² | 14 | 2 | 8000004133 |

**Note** Markers numbered 1-50 (horizontal text) and mounting screws are included in the delivery.
*DU = feed-through terminals, PE = PE terminals

### Distribution box with ATEX II 2GD T85°C Ex e II T6

| Drill holes side A | Drill holes side B | No. of DU* | No. of PE* | Order No. |
|---|---|---|---|---|
| 3 x M16x1.5 | 3 x M16x1.5 | 13 | 2 | 8000004212 |
| 3 x M16x1.5 | 3 x M16x1.5 | 14 | 2 | 8000004211 |

**Note** All enclosures are equipped with an external earth stud connection.
*DU = feed-through terminals, PE = PE terminals

### Terminal rail / mounting plate set

| | Product type | Type | Length | Order No. |
|---|---|---|---|---|
| | Mounting rail | TS15 114 Klippon K21 CSS | 114 mm | 1910020000 |

**Note** Supplied with mounting screws for the mounting rail or mounting plate

## Klippon® K3

**45 mm**

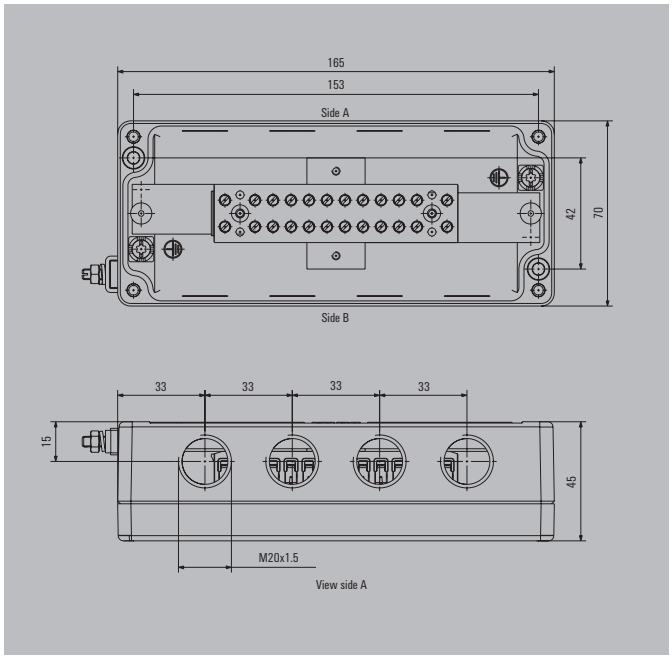


| | |
|---|---|
| Height / Width / Depth | 70 / 165 / 45 mm |

### Accessories

| Cable glands | | Order No. |
|---|---|---|
| | KSG M20 BN 0 NI 2 G20 | 1911560000 |
| **Stopping plugs** | | |
| | KSPM M20 PL | 1209910000 |
| | VP M20-EXE MS | 1737150000 |
| **Adapters** | | |
| | ADAP EX M20-M16 | 1737560000 |

### Empty enclosure with tapped holes

| | Drill holes side A | Drill holes side B | Order No. |
|---|---|---|---|
| | 4 x M20x1.5 | 4 x M20x1.5 | 8000004153 |

**Note** All enclosures are natural finish (unpainted).

**Note** You can find markers and labels in the Terminal Block Catalogue. Wall-mounting options can be found in Chapter B under Klippon® K

### Terminal block, suitable for empty enclosure

| | Type | Type of connection | Conductor can be clamped | Rated cross-section | No. of DU* | No. of PE* | Order No. |
|---|---|---|---|---|---|---|---|
| | BK 12/E | Screw connection | Solid / stranded | 0.5...4 mm² / 1.5...4 mm² | 12 | 0 | 8000004135 |
| | | | Flexible / flexible with wire-end ferrule | 0.5...4 mm² / 0.5...4 mm² | | | |

**Note** Supplied with mounting screws.
*DU = feed-through terminals, PE = PE terminals

### Distribution box with ATEX II 2GD T85°C Ex e II T6

| Drill holes side A | Drill holes side B | No. of DU* | No. of PE* | Order No. |
|---|---|---|---|---|
| 4 x M20x1.5 | 4 x M20x1.5 | 12 | 0 | 8000004213 |

**Note** All enclosures are equipped with an external earth stud connection.
*DU = feed-through terminals, PE = PE terminals

### Terminal rail / mounting plate set

| | Product type | Type | Length | Order No. |
|---|---|---|---|---|
| | Mounting plate | MOPL K3 BKVARIO SET | 154 mm | 8000004497 |
| | Mounting rail | TS15 155 Klippon K3 CSS | 155 mm | 1910030000 |

**Note** Supplied with mounting screws for the mounting rail or mounting plate

## Klippon® K31

57 mm

| Height / Width / Depth | 80 / 175 / 57 mm |
|---|---|

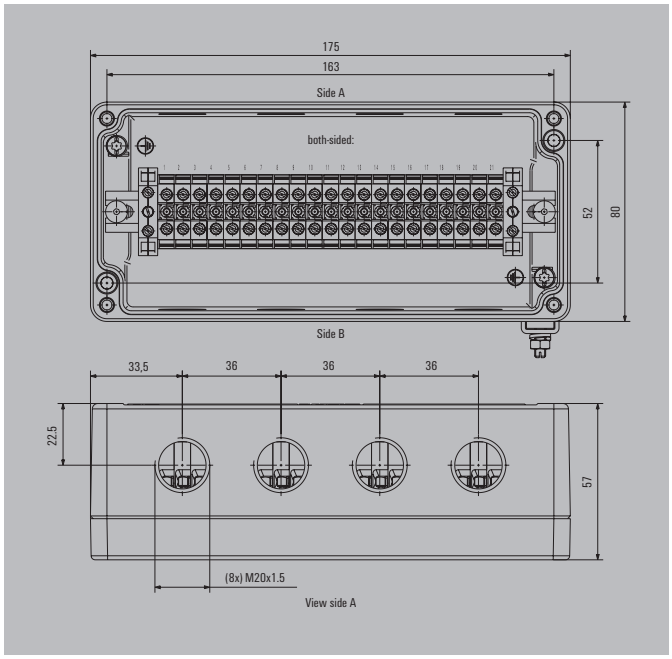


### Accessories

| Cable glands | | Order No. |
|---|---|---|
| | KSG M20 BN 0 NI 2 G20 | 1911560000 |
| **Stopping plugs** | | |
| | KSPM M20 PL | 1209910000 |
| | VP M20-EXE MS | 1737150000 |
| **Adapters** | | |
| | ADAP EX M20-M16 | 1737560000 |

### Empty enclosure with tapped holes

| | Drill holes side A | Drill holes side B | Order No. |
|---|---|---|---|
| | 4 x M20x1.5 | 4 x M20x1.5 | 8000004154 |

**Note** All enclosures are natural finish (unpainted).

**Note** You can find markers and labels in the Terminal Block Catalogue. Wall-mounting options can be found in Chapter B under Klippon® K

### Terminal block, suitable for empty enclosure

| | Type | Type of connection | Conductor can be clamped | Rated cross-section | No. of DU* | No. of PE* | Order No. |
|---|---|---|---|---|---|---|---|
| | AKZ 4 | Screw connection | Solid / stranded<br>Flexible / flexible with wire-end ferrule | 0.5...6 mm² / 1.5...4 mm²<br>0.5...4 mm² / 0.5...2.5 mm² | 21 | 2 | 8000004137 |
| | ZDUA 2.5-2 | Tension clamp connection | Solid / stranded<br>Flexible / flexible with wire-end ferrule | 0.5...4 mm² / ...<br>0.5...2.5 mm² / 0.5...1.5 mm² | 24 | 2 | 8000004136 |

**Note** Markers numbered 1-50 (horizontal text) and mounting screws are included in the delivery.
*DU = feed-through terminals, PE = PE terminals

### Distribution box with ATEX II 2GD T85°C Ex e II T6

| Drill holes side A | Drill holes side B | No. of DU* | No. of PE* | Order No. |
|---|---|---|---|---|
| 4 x M20x1.5 | 4 x M20x1.5 | 21 | 2 | 8000004215 |
| 4 x M20x1.5 | 4 x M20x1.5 | 24 | 2 | 8000004214 |

**Note** All enclosures are equipped with an external earth stud connection.
*DU = feed-through terminals, PE = PE terminals

### Terminal rail / mounting plate set

| | Product type | Type | Length | Order No. |
|---|---|---|---|---|
| | Mounting rail | TS15 164 Klippon K31 CSS | 164 mm | 1910040000 |

**Note** Supplied with mounting screws for the mounting rail or mounting plate

## Klippon® K4

72 mm

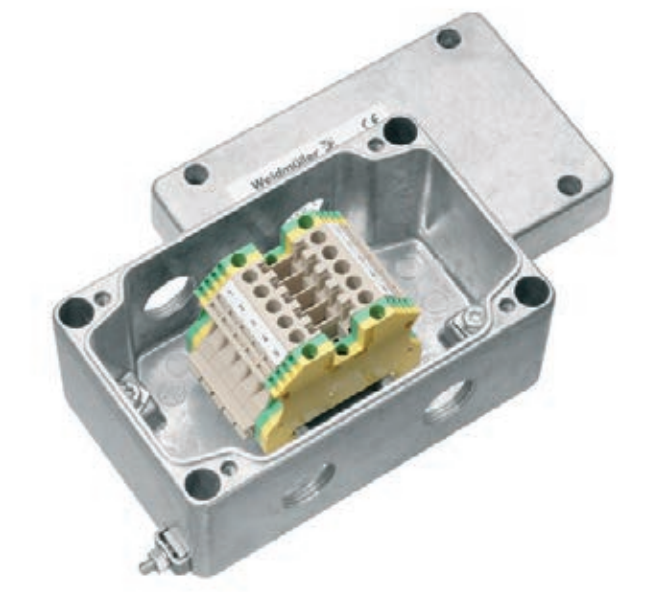

| Height / Width / Depth | 82 / 130 / 72 mm |
|---|---|

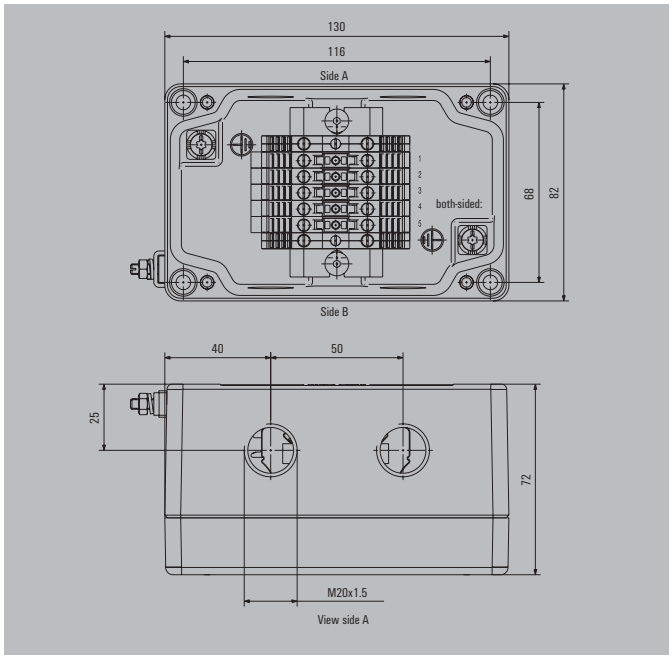


### Accessories

| Cable glands | Order No. |
|---|---|
| KSG M20 BN 0 NI 2 G20 | 1911560000 |

| Stopping plugs | |
|---|---|
| KSPM M20 PL | 1209910000 |
| VP M20-EXE MS | 1737150000 |

| Adapters | |
|---|---|
| ADAP EX M20-M16 | 1737560000 |

### Empty enclosure with tapped holes

| Drill holes side A | Drill holes side B | Order No. |
|---|---|---|
| 2 x M20x1.5 | 2 x M20x1.5 | 8000004155 |

**Note** All enclosures are natural finish (unpainted).

**Note** You can find markers and labels in the Terminal Block Catalogue. Wall-mounting options can be found in Chapter B under Klippon® K

### Terminal block, suitable for empty enclosure

| Type | Type of connection | Conductor can be clamped | Rated cross-section | No. of DU* | No. of PE* | Order No. |
|---|---|---|---|---|---|---|
| ZDU 4-2/3AN | Tension clamp connection | Solid / stranded<br>Flexible / flexible with wire-end ferrule | 0.5...6 mm² / ...<br>0.5...4 mm² / 0.5...4 mm² | 4 | 1 | 8000004139 |
| WDU 4 | Screw connection | Solid / stranded<br>Flexible / flexible with wire-end ferrule | 0.5...6 mm² / 1.5...6 mm²<br>0.5...6 mm² / 0.5...4 mm² | 5 | 2 | 8000004138 |

**Note** Markers numbered 1-50 (horizontal text) and mounting screws are included in the delivery.
*DU = feed-through terminals, PE = PE terminals

### Distribution box with ATEX II 2GD T85°C Ex e II T6

| Drill holes side A | Drill holes side B | No. of DU* | No. of PE* | Order No. |
|---|---|---|---|---|
| 2 x M20x1.5 | 2 x M20x1.5 | 5 | 2 | 8000004216 |
| 2 x M20x1.5 | 2 x M20x1.5 | 4 | 1 | 8000004217 |

### Terminal rail / mounting plate set

| Product type | Type | Length | Order No. |
|---|---|---|---|
| Mounting rail | TS35 64 Klippon K4K11 | 64 mm | 1910060000 |

All enclosures are equipped with an external earth stud connection.
*DU = feed-through terminals, PE = PE terminals

## Klippon® K41

**81 mm**

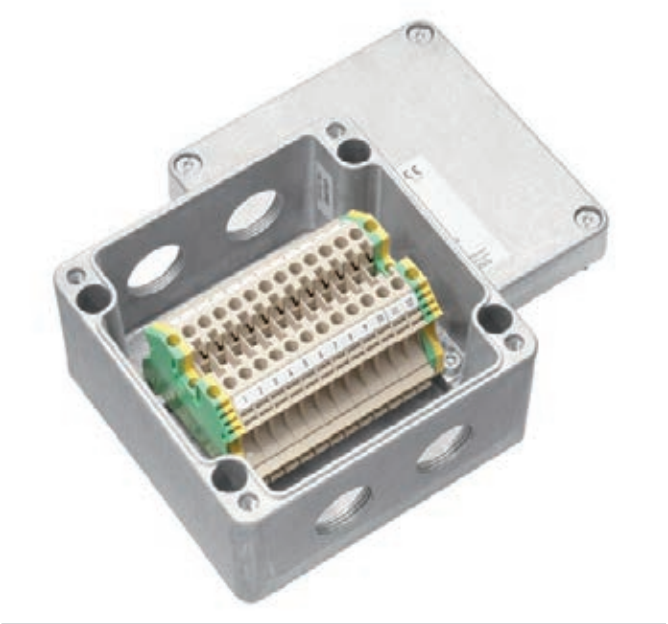

| Height / Width / Depth | 120 / 122 / 81 mm |
|---|---|

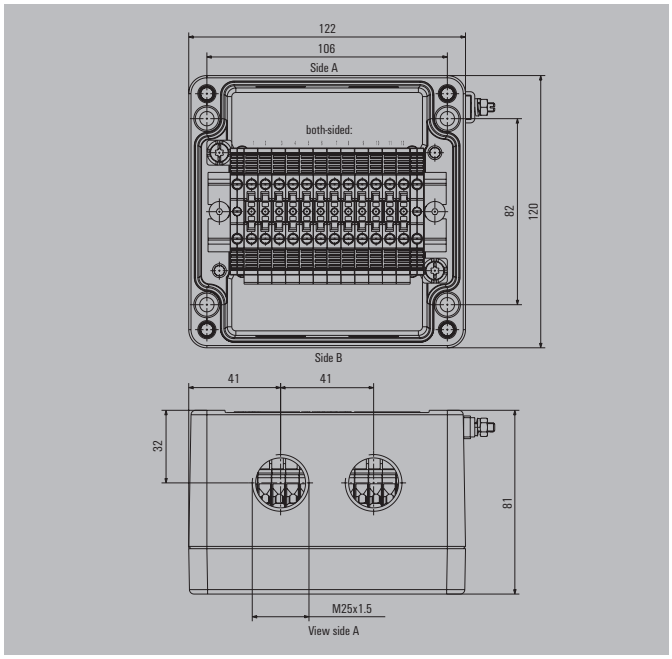


### Accessories

| Cable glands | Order No. |
|---|---|
| KSG M20 BN 0 NI 2 G20 | 1911560000 |
| KSG M25 BN 0 NI 2 G25 | 1911570000 |
| **Stopping plugs** | |
| KSPM M20 PL | 1209910000 |
| KSPM M25 PL | 1209920000 |
| VP M20-EXE MS | 1737150000 |
| VP M25-EXE MS | 1737160000 |
| **Adapters** | |
| ADAP EX M25-M16 | 1737550000 |
| ADAP EX M25-M20 | 1737710000 |

### Empty enclosure with tapped holes

| Drill holes side A | Drill holes side B | Order No. |
|---|---|---|
| 2 x M25x1.5 | 2 x M25x1.5 | 8000003446 |
| 3 x M20x1.5 | 3 x M20x1.5 | 8000003447 |

**Note** All enclosures are natural finish (unpainted).

**Note** You can find markers and labels in the Terminal Block Catalogue. Wall-mounting options can be found in Chapter B under Klippon® K

### Terminal block, suitable for empty enclosure

| Type | Type of connection | Conductor can be clamped | Rated cross-section | No. of DU* | No. of PE* | Order No. |
|---|---|---|---|---|---|---|
| ZDU 4-2/3AN | Tension clamp connection | Solid / stranded | 0.5...6 mm² / ... | 9 | 2 | 8000003445 |
| | | Flexible / flexible with wire-end ferrule | 0.5...4 mm² / 0.5...4 mm² | | | |
| WDU 4 | Screw connection | Solid / stranded | 0.5...6 mm² / 1.5...6 mm² | 12 | 2 | 8000003444 |
| | | Flexible / flexible with wire-end ferrule | 0.5...6 mm² / 0.5...4 mm² | | | |

**Note** Markers numbered 1-50 (horizontal text) and mounting screws are included in the delivery.
*DU = feed-through terminals, PE = PE terminals

### Distribution box with ATEX II 2GD T85°C Ex e II T6

| Drill holes side A | Drill holes side B | No. of DU* | No. of PE* | Order No. |
|---|---|---|---|---|
| 3 x M20x1.5 | 3 x M20x1.5 | 12 | 2 | 8000003591 |
| 3 x M20x1.5 | 3 x M20x1.5 | 9 | 2 | 8000003592 |
| 2 x M25x1.5 | 2 x M25x1.5 | 12 | 2 | 8000003589 |
| 2 x M25x1.5 | 2 x M25x1.5 | 9 | 2 | 8000003590 |

**Note** All enclosures are equipped with an external earth stud connection.
*DU = feed-through terminals, PE = PE terminals

### Terminal rail / mounting plate set

| Product type | Type | Length | Order No. |
|---|---|---|---|
| Mounting rail | TS35 105 Klippon K41/POK4 | 105 mm | 1910070000 |

**Note** Supplied with mounting screws for the mounting rail or mounting plate

## Klippon® K5

**90 mm**

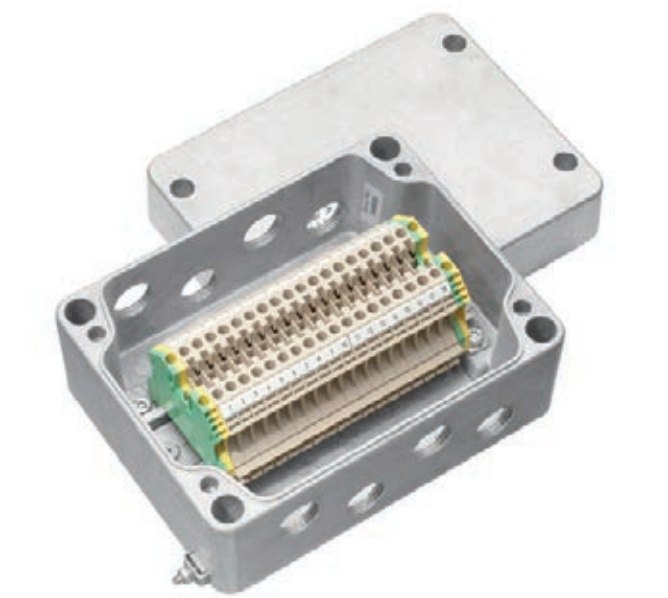

| Height / Width / Depth | 130 / 170 / 90 mm |
|---|---|

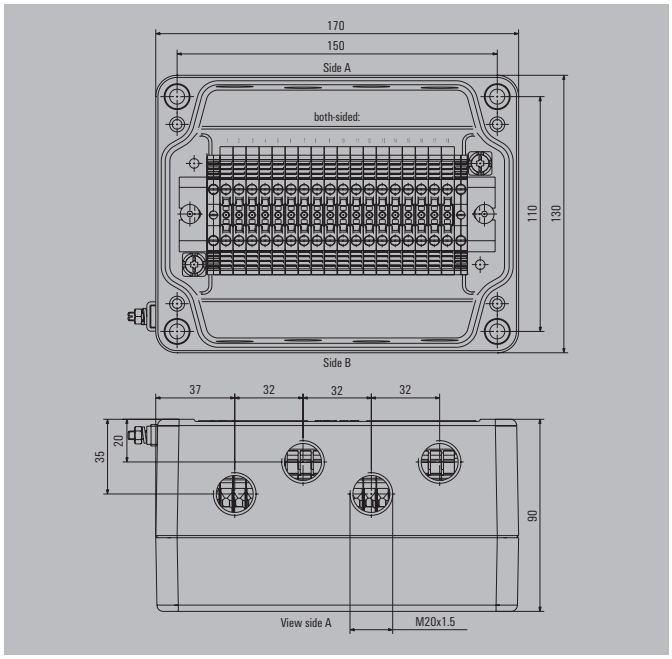


### Accessories

| Cable glands | Order No. |
|---|---|
| KSG M20 BN 0 NI 2 G20 | 1911560000 |
| **Stopping plugs** | |
| KSPM M20 PL | 1209910000 |
| VP M20-EXE MS | 1737150000 |
| **Adapters** | |
| ADAP EX M20-M16 | 1737560000 |

### Empty enclosure with tapped holes

| Drill holes side A | Drill holes side B | Order No. |
|---|---|---|
| 4 x M20x1.5 | 4 x M20x1.5 | 8000004158 |

**Note** All enclosures are natural finish (unpainted).

**Note** You can find markers and labels in the Terminal Block Catalogue. Wall-mounting options can be found in Chapter B under Klippon® K

### Terminal block, suitable for empty enclosure

| Type | Type of connection | Conductor can be clamped | Rated cross-section | No. of DU* | No. of PE* | Order No. |
|---|---|---|---|---|---|---|
| ZDU 4-2/3AN | Tension clamp connection | Solid / stranded | 0.5...6 mm² / ... | 15 | 2 | 8000004141 |
| | | Flexible / flexible with wire-end ferrule | 0.5...4 mm² / 0.5...4 mm² | | | |
| WDU 4 | Screw connection | Solid / stranded | 0.5...6 mm² / 1.5...6 mm² | 17 | 2 | 8000004140 |
| | | Flexible / flexible with wire-end ferrule | 0.5...6 mm² / 0.5...4 mm² | | | |

**Note** Markers numbered 1-50 (horizontal text) and mounting screws are included in the delivery.
*DU = feed-through terminals, PE = PE terminals

### Distribution box with ATEX II 2GD T85°C Ex e II T6

| Drill holes side A | Drill holes side B | No. of DU* | No. of PE* | Order No. |
|---|---|---|---|---|
| 4 x M20x1.5 | 4 x M20x1.5 | 17 | 2 | 8000004218 |
| 4 x M20x1.5 | 4 x M20x1.5 | 15 | 2 | 8000004219 |

**Note** All enclosures are equipped with an external earth stud connection.
*DU = feed-through terminals, PE = PE terminals

### Terminal rail / mounting plate set

| Product type | Type | Length | Order No. |
|---|---|---|---|
| Mounting rail | TS35/148 KLIPPON K5 CSS | 148 mm | 1910080000 |

**Note** Supplied with mounting screws for the mounting rail or mounting plate

## Klippon® K52

**91 mm**

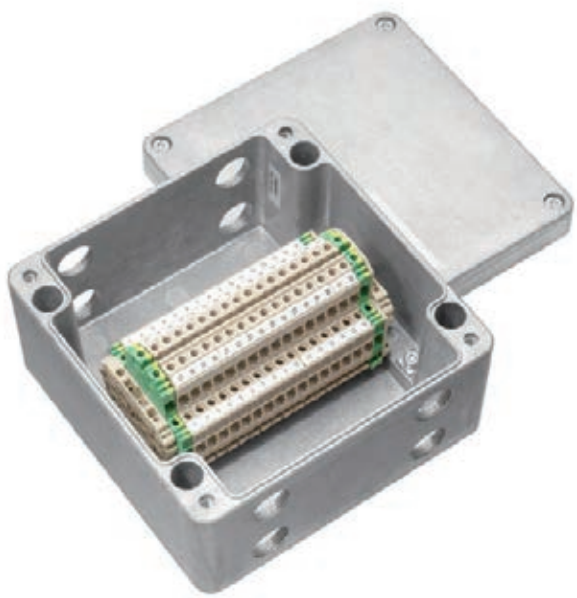

| Height / Width / Depth | 160 / 160 / 91 mm |
|---|---|

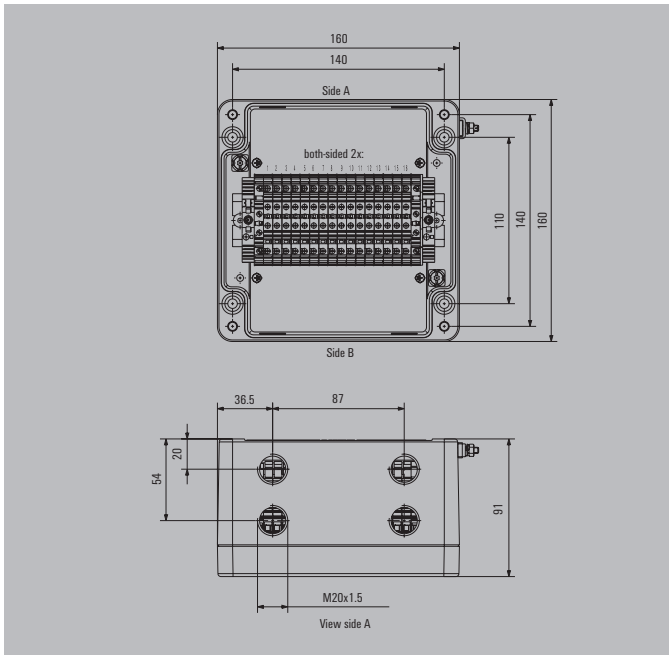


### Accessories

| Cable glands | Order No. |
|---|---|
| KSG M20 BN 0 NI 2 G20 | 1911560000 |
| | |
| | |
| **Stopping plugs** | |
| KSPM M16 PL | 1209890000 |
| VP M20-EXE MS | 1737150000 |
| | |
| **Adapters** | |
| ADAP EX M20-M16 | 1737560000 |
| | |
| | |

### Empty enclosure with tapped holes

| | Drill holes side A | Drill holes side B | Order No. |
|---|---|---|---|
| | 4 x M20x1.5 | 4 x M20x1.5 | 8000004159 |

**Note** All enclosures are unpainted

**Note** You can find markers and labels in the Terminal Block Catalogue. Wall-mounting options can be found in Chapter B under Klippon® K

### Terminal block, suitable for empty enclosure

| | Type | Type of connection | Conductor can be clamped | Rated cross-section | No. of DU* | No. of PE* | Order No. |
|---|---|---|---|---|---|---|---|
| | ZDK 2.5 | Tension clamp connection | Solid / stranded<br>Flexible / flexible with wire-end ferrule | 0.5...2.5 mm² / ...<br>0.5...2.5 mm² / 0.5...2.5 mm² | 19 | 2 | 8000004143 |
| | WDK 4N | Screw connection | Solid / stranded<br>Flexible / flexible with wire-end ferrule | 0.5...6 mm² / 1.5...6 mm²<br>0.5...4 mm² / 0.5...4 mm² | 16 | 2 | 8000004142 |

**Note** Markers numbered 1-50 (horizontal text) and mounting screws are included in the delivery.
*DU = feed-through terminals, PE = PE terminals

### Distribution box with ATEX II 2GD T85°C Ex e II T6

| Drill holes side A | Drill holes side B | No. of DU* | No. of PE* | Order No. |
|---|---|---|---|---|
| 4 x M20x1.5 | 4 x M20x1.5 | 16 | 2 | 8000004220 |
| 4 x M20x1.5 | 4 x M20x1.5 | 19 | 2 | 8000004221 |

**Note** All enclosures are equipped with an external earth stud connection.
*DU = feed-through terminals, PE = PE terminals

### Terminal rail / mounting plate set

| | Product type | Type | Length | Order No. |
|---|---|---|---|---|
| | Mounting rail | TS35/140 Klippon K52 POK51 | 140 mm | 1910100000 |

**Note** Supplied with mounting screws for the mounting rail or mounting plate

# Klippon® POK – Polyester enclosures

The Klippon® POK range is based on a high-quality glass fibre-reinforced polyester enclosure which represents an economical solution for electrical connections. The enclosures are ideal wherever corrosion resistance, impact resistance and a high IP protection class are required.

Features of the enclosure range:
- 17 sizes and 2 versions
- Stainless Steel lid screws
- Fixing holes located outside the sealed area
- Threaded holes for mounting rails
- Approved to the latest international standards

Our assembly service can supply these enclosures preassembled with terminals and cable glands according to customer requirements.

## Overview of enclosures

### Ordering data

| Description | Dimensions in mm | Standard | Ex Enclosures |
|---|---|---|---|
| Klippon® POK 1 | 75 x 80 x 56 | 1277200000 | 9510210000 |
| Klippon® POK 2 | 75 x 110 x 56 | 1277300000 | 9510220000 |
| Klippon® POK 3 | 75 x 160 x 56 | 1277400000 | 9510320000 |
| Klippon® POK 31 | 75 x 190 x 56 | 1565400000 | 9510330000 |
| Klippon® POK 32 | 75 x 230 x 56 | 9510510000 | 9510340000 |
| Klippon® POK 4 | 120 x 122 x 91 | 1277500000 | 9510230000 |
| Klippon® POK 5 | 120 x 220 x 91 | 1277600000 | 9510240000 |
| Klippon® POK 51 | 160 x 160 x 91 | 1565410000 | 9510250000 |
| Klippon® POK 6 | 160 x 260 x 91 | 1277700000 | 9510260000 |
| Klippon® POK 7 | 160 x 360 x 91 | 1277800000 | 9510270000 |
| Klippon® POK 71 | 160 x 560 x 91 | 9510520000 | 9510350000 |
| Klippon® POK 8 | 250 x 255 x 121 | 1565420000 | 9510280000 |
| Klippon® POK 9 | 250 x 400 x 121 | 1565430000 | 9510290000 |
| Klippon® POK 91 | 250 x 600 x 121 | 9510470000 | 9510300000 |
| Klippon® POK 10 | 405 x 400 x 121 | 1565440000 | 9510310000 |
| Klippon® POK 11 | 250 x 255 x 161 | 9510530000 | 9510360000 |
| Klippon® POK 12 | 250 x 400 x 161 | 9510540000 | 9510370000 |
| Note | | | |

## Technical Overview

### Features

- For use in hazardous area and industrial applications
- Extremely robust and impact resistant due to the high amount of glass fibre
- Approved to the latest international standards (e.g. ATEX, cULus, GOST)

| | |
|---|---|
| **Note** | The enclosure range Klippon® POK can be assembled with terminals or other approved equipment by our Application-Specific Solutions service. |

### Technical data

| | Ex | Standard |
|---|---|---|
| Enclosure material | Glass fibre-reinforced polyester to DIN 16913<br>with added graphite | Glass fibre-reinforced polyester to DIN 16913 |
| Surface | Black, similar to RAL 9011 | Grey, similar to RAL7001 |
| IP Rating | IP 66 | IP 66 |
| Equipment mounting | M4 to M6 threaded bushes | M4 to M6 threaded bushes |
| Enclosure mounting | 4 holes for M4 to M6 screw | 4 holes for M4 to M6 screws |
| Lid fixing | M4/M6 slothead / crosshead screws from stainless steel | M4/M6 slothead / crosshead screws from stainless steel |
| Impact Resistance | 7J | 7J |
| Gasket material | Silicone (VMQ) | Chloroprene |
| Temperature range | -55 °C...+100 °C | -40 °C...+90 °C |
| Torque screws of lid M4* | 2.0 - 2.5 Nm | 2.0 - 2.5 Nm |
| Torque screws of lid M6* | 2.5 - 3.0 Nm | 2.5 - 3.0 Nm |
| Flammability | UL94 V0 | UL94 V0 |
| Toxicity | Halogen and cadmium-free | Halogen and cadmium-free |
| **Note** | We deliver enclosures through our assembly service which are ready to be connected and suitable for every application<br>* Depending on the screw head size, the lid can be fastened using either our slotted or cross-head screwdrivers | |

### Approvals for empty enclosures

| | Ex | Standard |
|---|---|---|
| ATEX certificate | KEMA 02ATEX2078 U | |
| ATEX marking | II 2 GD Ex e II | |
| GOST Ex | POCC DE.ME92.B01149 | |
| GOST | POCC DE.ME25.B01450 | POCC DE.ME25.B01450 |
| cULus | | E 223801 |
| Lloyds Register | | 07/20008 |
| Russian Maritime Register | 11040200 | 11040200 |
| Germanischer Lloyd | | 4453607 HH |
| Installation | The Klippon® POK enclosure range can be pre-fitted in our customer specific production department according to your wishes;<br>as an example, terminals, or other approved components, can be installed as required. | |
| | This enclosure range is component certified. An additional certifications is required, when other electronic equipment will be installed into the enclosure. | |

### Approvals terminal enclosures

| | Ex | Standard |
|---|---|---|
| ATEX certificate | KEMA 03ATEX2077 | |
| ATEX marking | Ⓔx II 2 GD T85°C/T100°C Ex e II T6/T5<br>Ⓔx II 2 (1) GD T85°C/T100°C Ex e [ia] IIC T6/T5<br>Ⓔx II GD T85°C/T100°C Ex ia IIC T6/T5<br>IP64/IP65/IP66 | |
| **Note** | If you have specific requirements of equipment in hazardous area applications, please contact Weidmüller to get a copy of the complete certificates. | |

## Klippon® POK 1

**Depth** 56 mm

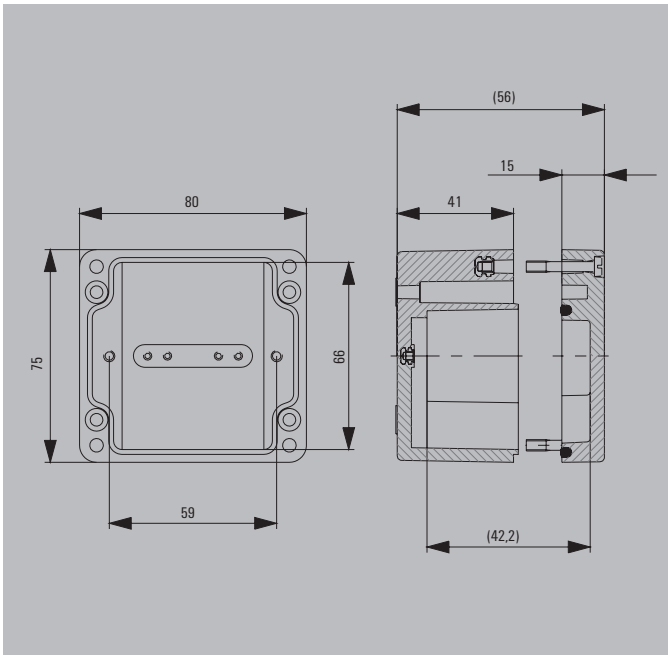


| | |
|---|---|
| Height/Width/Depth | 75 / 80 / 56 mm |

### Ordering data

| RAL 7001 | Order No. |
|---|---|
| Standard, grey | 1277200000 |
| **RAL 9011** | |
| Ex environment enclosure, black | 9510210000 |

**Note** The overview page lists the ambient temperatures. Colour variations may occur under certain circumstances.

### Accessories

| Terminal rail, Set | Order No. |
|---|---|
| 15 mm width | 1928060000 |
| **Mounting plate** | |
| Steel sheet, zinc plated | 9510570000 |
| **Hinge, diecast zinc, Set** | |
| | 1580360000 |
| **Brass Earth Continuity Plate** | |
| | 1390910000 |
| **External mounting feet, set of 4** | |
| | 9510900000 |

**Note** Accessories described above as sets, are supplied with fixing materials.
For this enclosure only one hinge is required to be fitted to the longest side.

### Max. number of terminals (industry)

| Assembly with terminal | vertical | horizontal |
|---|---|---|
| 2.5 mm² | 1x1* | 1x5 |
| 4 mm² | 1x1* | 1x4 |
| 6 mm² | | |
| 10 mm² | | |
| 16 mm² | | |

**Note** *Please refer to the Terminal Block Catalogue or the SAK Range for more information about populating the enclosures with terminal blocks. We recommend at most one BK 6 or BK 6 CRN (0625220000) in vertical installations. There are no pre-defined mounting points set within this enclosure for installing internal equipment in a vertical position.

### Number of cable entries

| Number of cable entries | A / B | C / D |
|---|---|---|
| M12 | 4 | 1 |
| M16 | 2 | 1 |
| M20 | 1 | 1 |
| M25 | 1 | |
| M32 | | |
| M40 | | |
| M50 | | |
| M63 | | |

**Note** **Our IP 68 plastic cable glands fitted without a bruss plate (cruciform) serve as a reference for these recommended values.

## Klippon® POK 2

**Depth** 56 mm

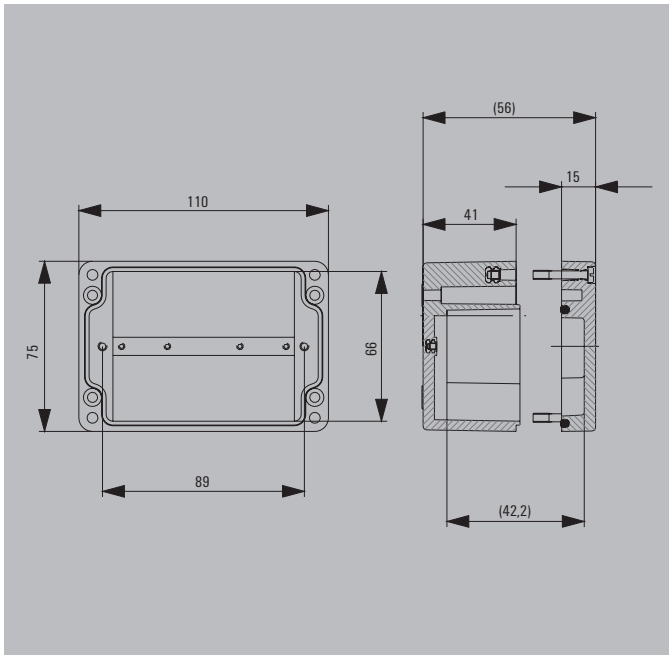


| | |
|---|---|
| Height/Width/Depth | 75 / 110 / 56 mm |

### Ordering data

| RAL 7001 | Order No. |
|---|---|
| Standard, grey | 1277300000 |
| **RAL 9011** | |
| Ex environment enclosure, black | 9510220000 |

**Note** The overview page lists the ambient temperatures. Colour variations may occur under certain circumstances.

### Accessories

| Terminal rail, Set | Order No. |
|---|---|
| 15 mm width | 1928070000 |
| **Mounting plate** | |
| Steel sheet, zinc plated | 9510580000 |
| **Hinge, diecast zinc, Set** | |
| | 1580360000 |
| **Brass Earth Continuity Plate** | |
| | 1390920000 |
| **External mounting feet, set of 4** | |
| | 9510900000 |

**Note** Accessories described above as sets, are supplied with fixing materials.
For this enclosure only one hinge is required to be fitted to the longest side.

### Max. number of terminals (industry)

| Assembly with terminal | vertical | horizontal |
|---|---|---|
| 2.5 mm² | 1x1* | 1x10 |
| 4 mm² | 1x1* | 1x9 |
| 6 mm² | | |
| 10 mm² | | |
| 16 mm² | | |

**Note** *Please refer to the Terminal Block Catalogue or the SAK Range for more information about populating the enclosures with terminal blocks. We recommend at most one BK 6 or BK 6 CRN (0625220000) in vertical installations. There are no pre-defined mounting points set within this enclosure for installing internal equipment in a vertical position.

### Number of cable entries

| Number of cable entries | A / B | C / D |
|---|---|---|
| M12 | 7 | 1 |
| M16 | 3 | 1 |
| M20 | 2 | 1 |
| M25 | 2 | |
| M32 | | |
| M40 | | |
| M50 | | |
| M63 | | |

**Note** **Our IP 68 plastic cable glands fitted without a bruss plate (cruciform) serve as a reference for these recommended values.

## Klippon® POK 3

**Depth** **56 mm**

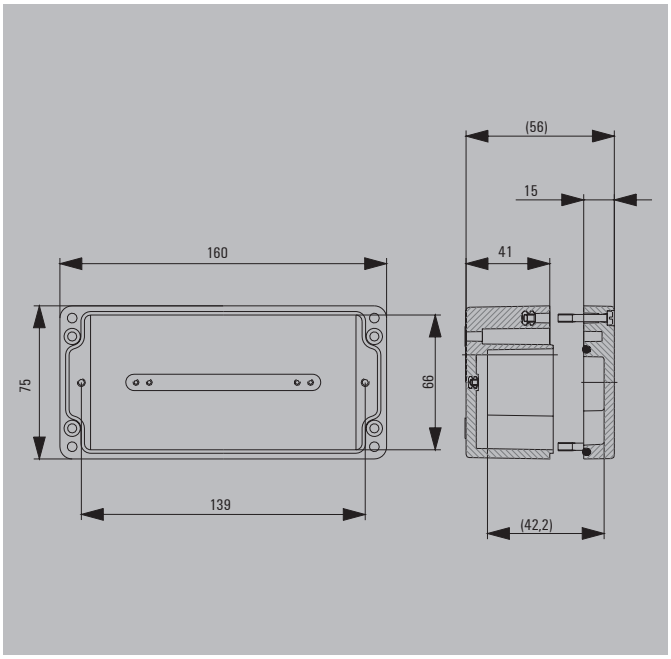


| | |
|---|---|
| Height/Width/Depth | 75 / 160 / 56 mm |

### Ordering data

| RAL 7001 | Order No. |
|---|---|
| Standard, grey | 1277400000 |
| **RAL 9011** | |
| Ex environment enclosure, black | 9510320000 |

**Note** The overview page lists the ambient temperatures. Colour variations may occur under certain circumstances.

### Accessories

| Terminal rail, Set | Order No. |
|---|---|
| 15 mm width | 1928080000 |
| **Mounting plate** | |
| Steel sheet, zinc plated | 9510680000 |
| **Hinge, diecast zinc, Set** | |
| | 1580360000 |
| **Brass Earth Continuity Plate** | |
| | 1390930000 |
| **External mounting feet, set of 4** | |
| | 9510900000 |

**Note** Accessories described above as sets, are supplied with fixing materials.
For this enclosure only one hinge is required to be fitted to the longest side.

### Max. number of terminals (industry)

| Assembly with terminal | vertical | horizontal |
|---|---|---|
| 2.5 mm² | * | 1x20 |
| 4 mm² | * | 1x17 |
| 6 mm² | | |
| 10 mm² | | |
| 16 mm² | | |

**Note** *Please refer to the Terminal Block Catalogue or the SAK Range for more information about populating the enclosures with terminal blocks. We recommend at most one BK 6 or BK 6 CRN (0625220000) in vertical installations. There are no pre-defined mounting points set within this enclosure for installing internal equipment in a vertical position.

### Number of cable entries

| Number of cable entries | A / B | C / D |
|---|---|---|
| M12 | 11 | 1 |
| M16 | 5 | 1 |
| M20 | 4 | 1 |
| M25 | 3 | |
| M32 | | |
| M40 | | |
| M50 | | |
| M63 | | |

**Note** **Our IP 68 plastic cable glands fitted without a bruss plate (cruciform) serve as a reference for these recommended values.

## Klippon® POK 31

**Depth** 56 mm

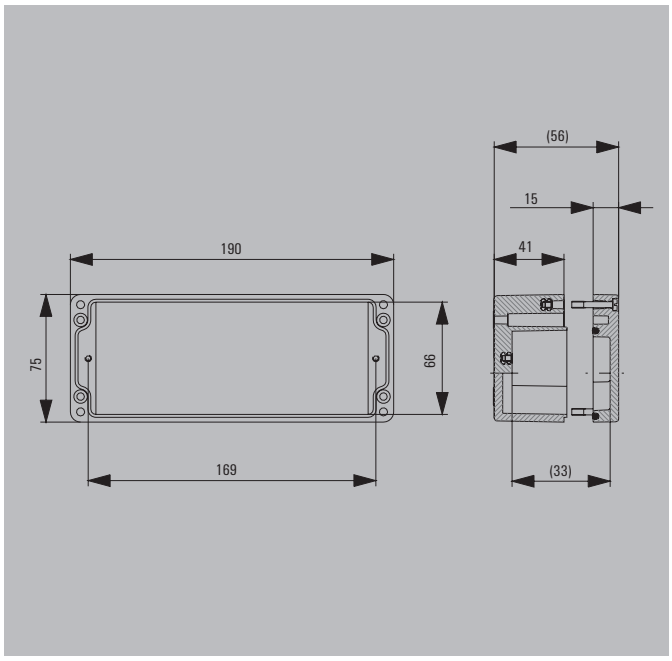


| | |
|---|---|
| Height/Width/Depth | 75 / 190 / 56 mm |

### Ordering data

| RAL 7001 | Order No. |
|---|---|
| Standard, grey | 1565400000 |
| **RAL 9011** | |
| Ex environment enclosure, black | 9510330000 |

**Note** The overview page lists the ambient temperatures. Colour variations may occur under certain circumstances.

### Accessories

| Terminal rail, Set | Order No. |
|---|---|
| 15 mm width | |
| **Mounting plate** | |
| Steel sheet, zinc plated | 9510690000 |
| **Hinge, diecast zinc, Set** | |
| | 1580360000 |
| **Brass Earth Continuity Plate** | |
| | 1390940000 |
| **External mounting feet, set of 4** | |
| | 9510900000 |

**Note** Accessories described above as sets, are supplied with fixing materials.
For this enclosure only one hinge is required to be fitted to the longest side.

### Max. number of terminals (industry)

| Assembly with terminal | vertical | horizontal |
|---|---|---|
| 2.5 mm² | * | 1x26 |
| 4 mm² | * | 1x22 |
| 6 mm² | | |
| 10 mm² | | |
| 16 mm² | | |

**Note** *Please refer to the Terminal Block Catalogue or the SAK Range for more information about populating the enclosures with terminal blocks. We recommend at most one BK 6 or BK 6 CRN (0625220000) in vertical installations. There are no pre-defined mounting points set within this enclosure for installing internal equipment in a vertical position.

### Number of cable entries

| Number of cable entries | A / B | C / D |
|---|---|---|
| M12 | 14 | 1 |
| M16 | 6 | 1 |
| M20 | 5 | 1 |
| M25 | 4 | |
| M32 | | |
| M40 | | |
| M50 | | |
| M63 | | |

**Note** **Our IP 68 plastic cable glands fitted without a bruss plate (cruciform) serve as a reference for these recommended values.

## Klippon® POK 32

**Depth** **56 mm**

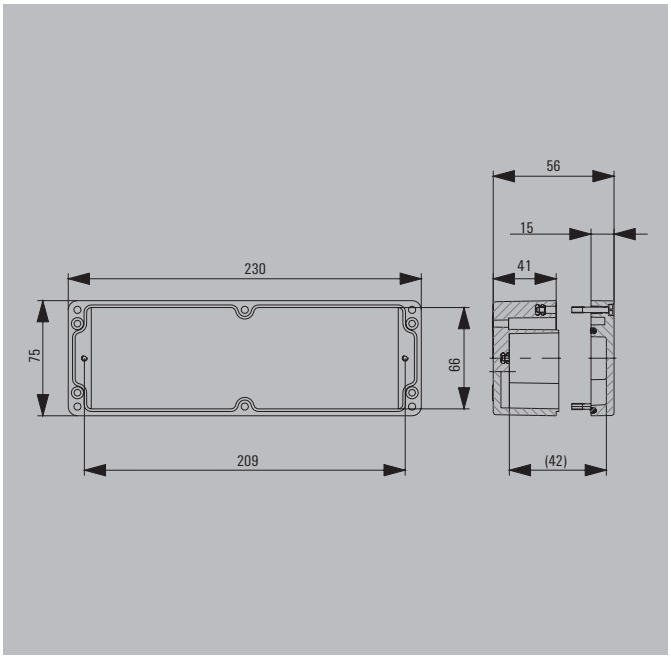


| | |
|---|---|
| Height/Width/Depth | 75 / 230 / 56 mm |

### Ordering data

| RAL 7001 | Order No. |
|---|---|
| Standard, grey | 9510510000 |
| **RAL 9011** | |
| Ex environment enclosure, black | 9510340000 |

| | |
|---|---|
| **Note** | The overview page lists the ambient temperatures. Colour variations may occur under certain circumstances. |

### Accessories

| Terminal rail, Set | Order No. |
|---|---|
| 15 mm width | |
| **Mounting plate** | |
| Steel sheet, zinc plated | 9510700000 |
| **Hinge, diecast zinc, Set** | |
| | 1580360000 |
| **Brass Earth Continuity Plate** | |
| | 1390950000 |
| **External mounting feet, set of 4** | |
| | 9510900000 |

| | |
|---|---|
| **Note** | Accessories described above as sets, are supplied with fixing materials.<br>For this enclosure only two hinges are required to be fitted to the longest side. |

### Max. number of terminals (industry)

| Assembly with terminal | vertical | horizontal |
|---|---|---|
| 2.5 mm² | * | 1x33 |
| 4 mm² | * | 1x28 |
| 6 mm² | | |
| 10 mm² | | |
| 16 mm² | | |

| | |
|---|---|
| **Note** | *Please refer to the Terminal Block Catalogue or the SAK Range for more information about populating the enclosures with terminal blocks. We recommend at most one BK 6 or BK 6 CRN (0625220000) in vertical installations. There are no pre-defined mounting points set within this enclosure for installing internal equipment in a vertical position. |

### Number of cable entries

| Number of cable entries | A / B | C / D |
|---|---|---|
| M12 | 16 | 1 |
| M16 | 6 | 1 |
| M20 | 6 | 1 |
| M25 | 4 | |
| M32 | | |
| M40 | | |
| M50 | | |
| M63 | | |

| | |
|---|---|
| **Note** | **Our IP 68 plastic cable glands fitted without a bruss plate (cruciform) serve as a reference for these recommended values. |

## Klippon® POK 4

**Depth** 91 mm

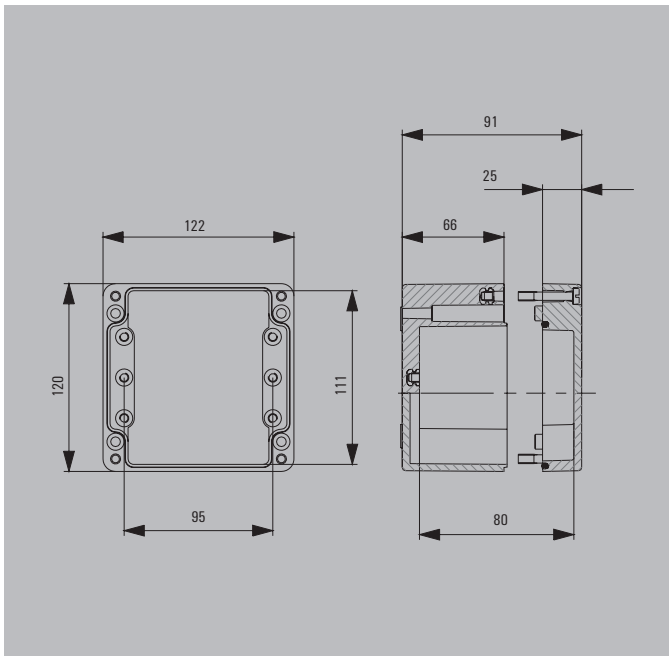


| Height/Width/Depth | 120 / 122 / 91 mm |
|---|---|

### Ordering data

| RAL 7001 | Order No. |
|---|---|
| Standard, grey | 1277500000 |
| **RAL 9011** | |
| Ex environment enclosure, black | 9510230000 |

**Note** The overview page lists the ambient temperatures. Colour variations may occur under certain circumstances.

### Accessories

| Terminal rail, Set | Order No. |
|---|---|
| 15 mm width | 1928110000 |
| **Mounting plate** | |
| Steel sheet, zinc plated | 9510590000 |
| **Hinge, diecast zinc, Set** | |
| | 1580360000 |
| **Brass Earth Continuity Plate** | |
| | 1390970000 |
| **External mounting feet, set of 4** | |
| | 9510910000 |

**Note** Accessories described above as sets, are supplied with fixing materials.
For this enclosure only two hinges are required to be fitted to the longest side.

### Max. number of terminals (industry)

| Assembly with terminal | vertical | horizontal |
|---|---|---|
| 2.5 mm² | * | 1x12 |
| 4 mm² | * | 1x10 |
| 6 mm² | * | 1x7 |
| 10 mm² | * | 1x6 |
| 16 mm² | * | 1x5 |

**Note** The mounting rails are designed to be installed directly.
Assembly with terminals provides for 10 mm clearance to the ends of the mounting rail.
Ordering recommendations:
TS 35 mounting rail (screw-type terminals) WDU 2.5 1020000000 / (tension clamp terminals) ZDU 2.5 1608510000
*There are no pre-defined mounting points set within this enclosure for installing internal equipment in a vertical position.

### Number of cable entries

| Number of cable entries | A / B | C / D |
|---|---|---|
| M12 | 12 | 8 |
| M16 | 6 | 4 |
| M20 | 4 | 3 |
| M25 | 2 | 1 |
| M32 | 1 | 1 |
| M40 | | |
| M50 | | |
| M63 | | |

**Note** **Our IP 68 plastic cable glands fitted without a bruss plate (cruciform) serve as a reference for these recommended values.

## Klippon® POK 5

**Depth** 91 mm

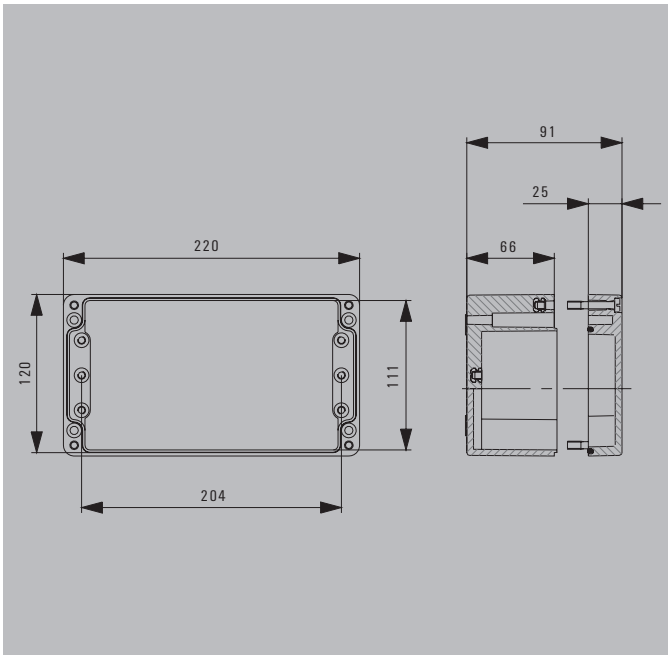


| | |
|---|---|
| Height/Width/Depth | 120 / 220 / 91 mm |

### Ordering data

| RAL 7001 | Order No. |
|---|---|
| Standard, grey | 1277600000 |
| **RAL 9011** | |
| Ex environment enclosure, black | 9510240000 |

**Note** The overview page lists the ambient temperatures. Colour variations may occur under certain circumstances.

### Accessories

| Terminal rail, Set | Order No. |
|---|---|
| 15 mm width | |
| **Mounting plate** | |
| Steel sheet, zinc plated | 9510600000 |
| **Hinge, diecast zinc, Set** | |
| | 1580360000 |
| **Brass Earth Continuity Plate** | |
| | 1390980000 |
| **External mounting feet, set of 4** | |
| | 9510910000 |

**Note** Accessories described above as sets, are supplied with fixing materials.
For this enclosure only two hinges are required to be fitted to the longest side.

### Max. number of terminals (industry)

| Assembly with terminal | vertical | horizontal |
|---|---|---|
| 2.5 mm² | * | 1x31 |
| 4 mm² | * | 1x26 |
| 6 mm² | * | 1x19 |
| 10 mm² | * | 1x15 |
| 16 mm² | * | 1x13 |

**Note** The mounting rails are designed to be installed directly.
Assembly with terminals provides for 10 mm clearance to the ends of the mounting rail.
Ordering recommendations:
TS 35 mounting rail (screw-type terminals) WDU 2.5 1020000000 / (tension clamp terminals) ZDU 2.5 1608510000
*There are no pre-defined mounting points set within this enclosure for installing internal equipment in a vertical position.

### Number of cable entries

| Number of cable entries | A / B | C / D |
|---|---|---|
| M12 | 24 | 8 |
| M16 | 14 | 4 |
| M20 | 12 | 3 |
| M25 | 5 | 1 |
| M32 | 4 | 1 |
| M40 | 3 | |
| M50 | | |
| M63 | | |

**Note** **Our IP 68 plastic cable glands fitted without a bruss plate (cruciform) serve as a reference for these recommended values.

## Klippon® POK 51

**Depth** 91 mm

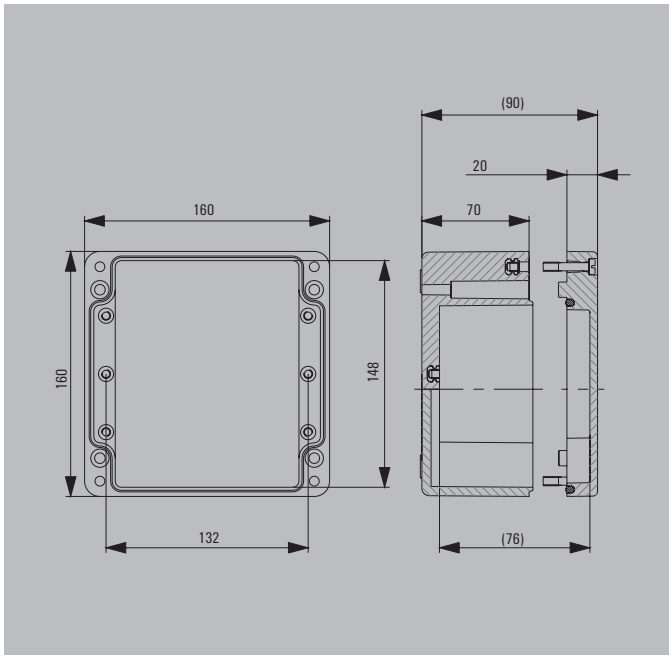


| | |
|---|---|
| Height/Width/Depth | 160 / 160 / 91 mm |

### Ordering data

| RAL 7001 | Order No. |
|---|---|
| Standard, grey | 1565410000 |
| **RAL 9011** | |
| Ex environment enclosure, black | 9510250000 |

**Note** The overview page lists the ambient temperatures. Colour variations may occur under certain circumstances.

### Accessories

| Terminal rail, Set | Order No. |
|---|---|
| 15 mm width | 1928130000 |
| **Mounting plate** | |
| Steel sheet, zinc plated | 9510610000 |
| **Hinge, diecast zinc, Set** | |
| | 1580360000 |
| **Brass Earth Continuity Plate** | |
| | 1390990000 |
| **External mounting feet, set of 4** | |
| | 9510910000 |

**Note** Accessories described above as sets, are supplied with fixing materials.
For this enclosure only two hinges are required to be fitted to the longest side.

### Max. number of terminals (industry)

| Assembly with terminal | vertical | horizontal |
|---|---|---|
| 2.5 mm² | * | 1x17 |
| 4 mm² | * | 1x14 |
| 6 mm² | * | 1x11 |
| 10 mm² | * | 1x9 |
| 16 mm² | * | 1x7 |

**Note** The mounting rails are designed to be installed directly.
Assembly with terminals provides for 10 mm clearance to the ends of the mounting rail.
Ordering recommendations:
TS 35 mounting rail (screw-type terminals) WDU 2.5 1020000000 / (tension clamp terminals) ZDU 2.5 1608510000
*There are no pre-defined mounting points set within this enclosure for installing internal equipment in a vertical position.

### Number of cable entries

| Number of cable entries | A / B | C / D |
|---|---|---|
| M12 | 15 | 11 |
| M16 | 12 | 6 |
| M20 | 6 | 4 |
| M25 | 3 | 2 |
| M32 | 2 | 2 |
| M40 | 2 | 1 |
| M50 | | |
| M63 | | |

**Note** **Our IP 68 plastic cable glands fitted without a bruss plate (cruciform) serve as a reference for these recommended values.

## Klippon® POK 6

**Depth** 91 mm

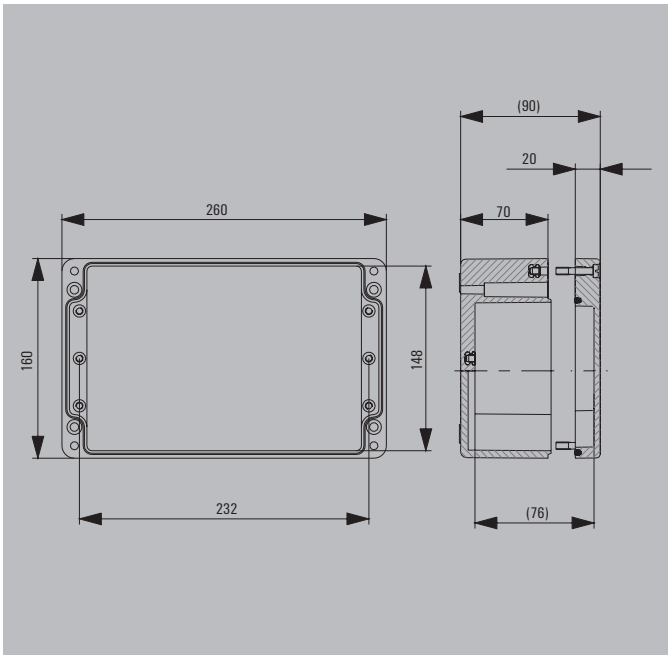


| | |
|---|---|
| Height/Width/Depth | 160 / 260 / 91 mm |

### Ordering data

| RAL 7001 | Order No. |
|---|---|
| Standard, grey | 1277700000 |
| **RAL 9011** | |
| Ex environment enclosure, black | 9510260000 |

**Note** The overview page lists the ambient temperatures. Colour variations may occur under certain circumstances.

### Accessories

| Terminal rail, Set | Order No. |
|---|---|
| 15 mm width | |
| **Mounting plate** | |
| Steel sheet, zinc plated | 9510620000 |
| **Hinge, diecast zinc, Set** | |
| | 1580360000 |
| **Brass Earth Continuity Plate** | |
| | 1391000000 |
| **External mounting feet, set of 4** | |
| | 9510910000 |

**Note** Accessories described above as sets, are supplied with fixing materials.
For this enclosure only two hinges are required to be fitted to the longest side.

### Max. number of terminals (industry)

| Assembly with terminal | vertical | horizontal |
|---|---|---|
| 2.5 mm² | * | 1x36 |
| 4 mm² | * | 1x30 |
| 6 mm² | * | 1x23 |
| 10 mm² | * | 1x16 |
| 16 mm² | * | 1x16 |

**Note** The mounting rails are designed to be installed directly.
Assembly with terminals provides for 10 mm clearance to the ends of the mounting rail.
Ordering recommendations:
TS 35 mounting rail (screw-type terminals) WDU 2.5 1020000000 / (tension clamp terminals) ZDU 2.5 1608510000
*There are no pre-defined mounting points set within this enclosure for installing internal equipment in a vertical position.

### Number of cable entries

| Number of cable entries | A / B | C / D |
|---|---|---|
| M12 | 30 | 11 |
| M16 | 24 | 6 |
| M20 | 14 | 4 |
| M25 | 5 | 2 |
| M32 | 4 | 2 |
| M40 | 3 | 1 |
| M50 | | |
| M63 | | |

**Note** **Our IP 68 plastic cable glands fitted without a bruss plate (cruciform) serve as a reference for these recommended values.

## Klippon® POK 7

**Depth** 91 mm

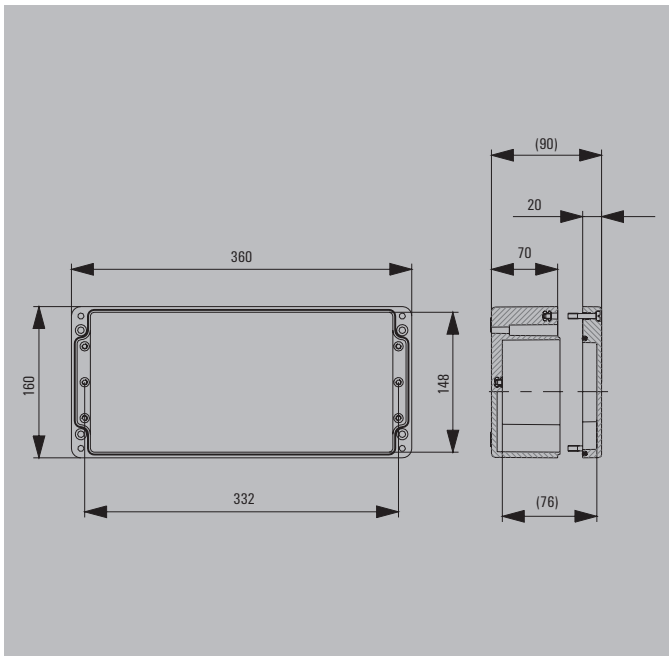


| | |
|---|---|
| Height/Width/Depth | 160 / 360 / 91 mm |

### Ordering data

| RAL 7001 | Order No. |
|---|---|
| Standard, grey | 1277800000 |
| **RAL 9011** | |
| Ex environment enclosure, black | 9510270000 |

**Note** The overview page lists the ambient temperatures. Colour variations may occur under certain circumstances.

### Accessories

| Terminal rail, Set | Order No. |
|---|---|
| 15 mm width | |
| **Mounting plate** | |
| Steel sheet, zinc plated | 9510630000 |
| **Hinge, diecast zinc, Set** | |
| | 1580360000 |
| **Brass Earth Continuity Plate** | |
| | 1391010000 |
| **External mounting feet, set of 4** | |
| | 9510910000 |

**Note** Accessories described above as sets, are supplied with fixing materials.
For this enclosure only two hinges are required to be fitted to the longest side.

### Max. number of terminals (industry)

| Assembly with terminal | vertical | horizontal |
|---|---|---|
| 2.5 mm² | * | 1x56 |
| 4 mm² | * | 1x47 |
| 6 mm² | * | 1x36 |
| 10 mm² | * | 1x29 |
| 16 mm² | * | 1x24 |

**Note** The mounting rails are designed to be installed directly.
Assembly with terminals provides for 10 mm clearance to the ends of the mounting rail.
Ordering recommendations:
TS 35 mounting rail (screw-type terminals) WDU 2.5 1020000000 / (tension clamp terminals) ZDU 2.5 1608510000
*There are no pre-defined mounting points set within this enclosure for installing internal equipment in a vertical position.

### Number of cable entries

| Number of cable entries | A / B | C / D |
|---|---|---|
| M12 | 45 | 11 |
| M16 | 36 | 6 |
| M20 | 20 | 4 |
| M25 | 8 | 2 |
| M32 | 6 | 2 |
| M40 | 5 | 1 |
| M50 | | |
| M63 | | |

**Note** **Our IP 68 plastic cable glands fitted without a bruss plate (cruciform) serve as a reference for these recommended values.

## Klippon® POK 71

**Depth** 91 mm

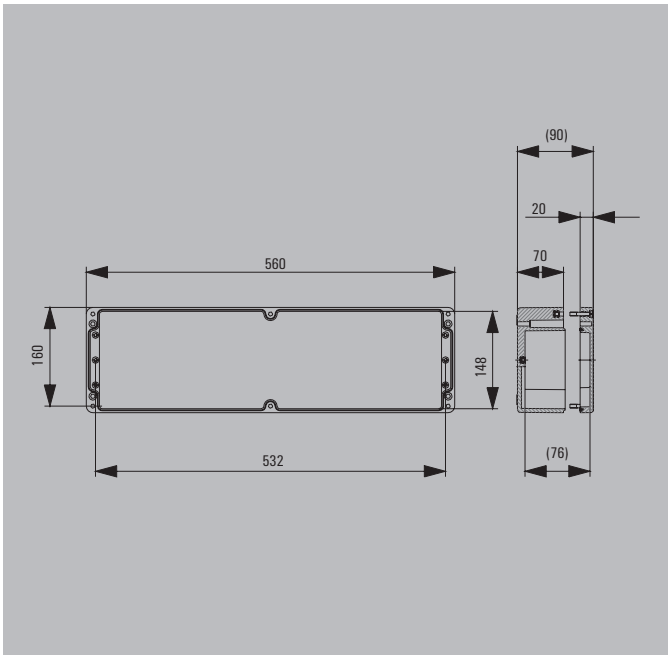


| | |
|---|---|
| Height/Width/Depth | 160 / 560 / 91 mm |

### Ordering data

| RAL 7001 | Order No. |
|---|---|
| Standard, grey | 9510520000 |
| **RAL 9011** | |
| Ex environment enclosure, black | 9510350000 |

**Note** The overview page lists the ambient temperatures. Colour variations may occur under certain circumstances.

### Accessories

| Terminal rail, Set | Order No. |
|---|---|
| 15 mm width | |
| **Mounting plate** | |
| Steel sheet, zinc plated | 9510710000 |
| **Hinge, diecast zinc, Set** | |
| | 1580360000 |
| **Brass Earth Continuity Plate** | |
| | 1391020000 |
| **External mounting feet, set of 4** | |
| | 9510910000 |

**Note** Accessories described above as sets, are supplied with fixing materials.
For this enclosure only two hinges are required to be fitted to the longest side.

### Max. number of terminals (industry)

| Assembly with terminal | vertical | horizontal |
|---|---|---|
| 2.5 mm² | * | 1x94 |
| 4 mm² | * | 1x79 |
| 6 mm² | * | 1x60 |
| 10 mm² | * | 1x49 |
| 16 mm² | * | 1x41 |

**Note** The mounting rails are designed to be installed directly.
Assembly with terminals provides for 10 mm clearance to the ends of the mounting rail.
Ordering recommendations:
TS 35 mounting rail (screw-type terminals) WDU 2.5 1020000000 / (tension clamp terminals) ZDU 2.5 1608510000
*There are no pre-defined mounting points set within this enclosure for installing internal equipment in a vertical position.

### Number of cable entries

| Number of cable entries | A / B | C / D |
|---|---|---|
| M12 | 66 | 11 |
| M16 | 58 | 6 |
| M20 | 32 | 4 |
| M25 | 12 | 2 |
| M32 | 10 | 2 |
| M40 | 8 | 1 |
| M50 | | |
| M63 | | |

**Note** **Our IP 68 plastic cable glands fitted without a bruss plate (cruciform) serve as a reference for these recommended values.

## Klippon® POK 8

**Depth** 121 mm

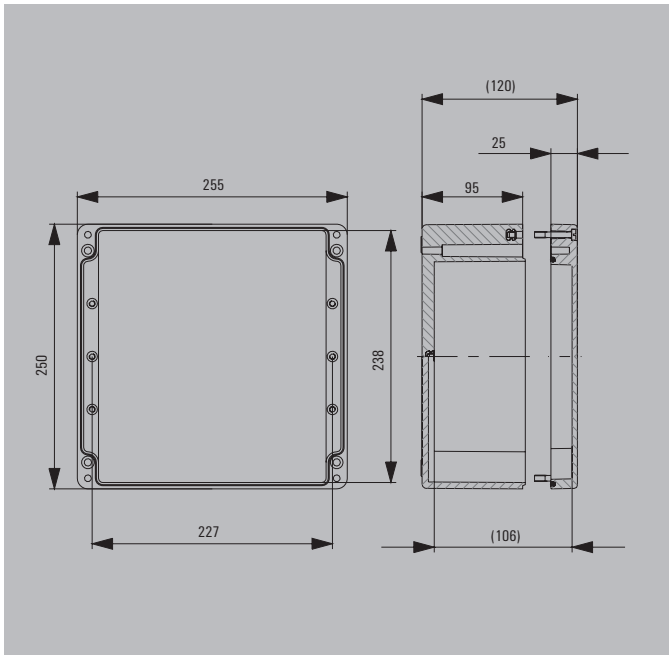


| | |
|---|---|
| Height/Width/Depth | 250 / 255 / 121 mm |

### Ordering data

| RAL 7001 | Order No. |
|---|---|
| Standard, grey | 1565420000 |
| **RAL 9011** | |
| Ex environment enclosure, black | 9510280000 |

**Note** The overview page lists the ambient temperatures. Colour variations may occur under certain circumstances.

### Accessories

| Terminal rail, Set | Order No. |
|---|---|
| 15 mm width | |
| **Mounting plate** | |
| Steel sheet, zinc plated | 9510640000 |
| **Hinge, diecast zinc, Set** | |
| | 1580360000 |
| **Brass Earth Continuity Plate** | |
| | 1391030000 |
| **External mounting feet, set of 4** | |
| | 9510910000 |

**Note** Accessories described above as sets, are supplied with fixing materials.
For this enclosure only two hinges are required to be fitted to the longest side.

### Max. number of terminals (industry)

| Assembly with terminal | vertical | horizontal |
|---|---|---|
| 2.5 mm² | * | 2x38 |
| 4 mm² | * | 2x31 |
| 6 mm² | * | 2x23 |
| 10 mm² | * | 2x19 |
| 16 mm² | * | 2x15 |

**Note** The mounting rails are designed to be installed directly.
Assembly with terminals provides for 10 mm clearance to the ends of the mounting rail.
Ordering recommendations:
TS 35 mounting rail (screw-type terminals) WDU 2.5 1020000000 / (tension clamp terminals) ZDU 2.5 1608510000
*There are no pre-defined mounting points set within this enclosure for installing internal equipment in a vertical position.

### Number of cable entries

| Number of cable entries | A / B | C / D |
|---|---|---|
| M12 | 36 | 32 |
| M16 | 32 | 21 |
| M20 | 10 | 15 |
| M25 | 10 | 8 |
| M32 | 8 | 3 |
| M40 | 3 | 3 |
| M50 | 2 | 2 |
| M63 | | |

**Note** **Our IP 68 plastic cable glands fitted without a bruss plate (cruciform) serve as a reference for these recommended values.

## Klippon® POK 9

**Depth** 121 mm

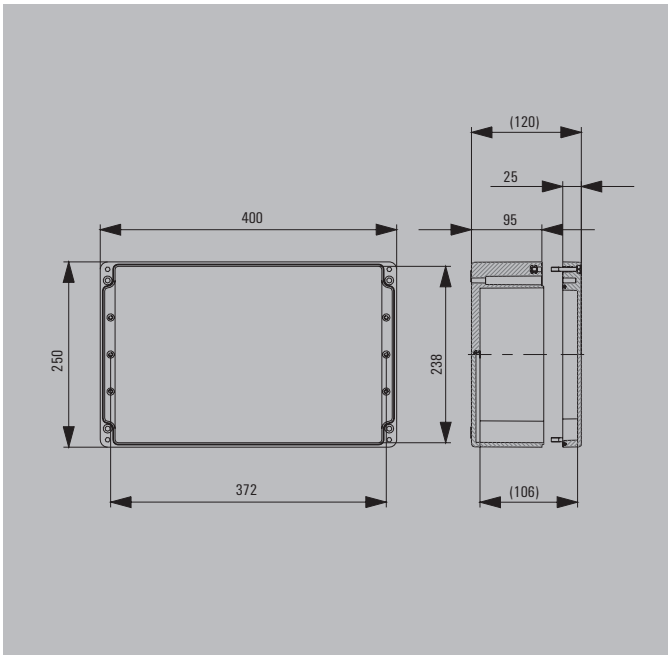


| | |
|---|---|
| Height/Width/Depth | 250 / 400 / 121 mm |

### Ordering data

| RAL 7001 | Order No. |
|---|---|
| Standard, grey | 1565430000 |
| **RAL 9011** | |
| Ex environment enclosure, black | 9510290000 |

**Note** The overview page lists the ambient temperatures. Colour variations may occur under certain circumstances.

### Accessories

| Terminal rail, Set | Order No. |
|---|---|
| 15 mm width | |
| **Mounting plate** | |
| Steel sheet, zinc plated | 9510650000 |
| **Hinge, diecast zinc, Set** | |
| | 1580360000 |
| **Brass Earth Continuity Plate** | |
| | 1391040000 |
| **External mounting feet, set of 4** | |
| | 9510910000 |

**Note** Accessories described above as sets, are supplied with fixing materials.
For this enclosure only two hinges are required to be fitted to the longest side.

### Max. number of terminals (industry)

| Assembly with terminal | vertical | horizontal |
|---|---|---|
| 2.5 mm² | * | 2x67 |
| 4 mm² | * | 2x55 |
| 6 mm² | * | 2x41 |
| 10 mm² | * | 2x33 |
| 16 mm² | * | 2x27 |

**Note** The mounting rails are designed to be installed directly.
Assembly with terminals provides for 10 mm clearance to the ends of the mounting rail.
Ordering recommendations:
TS 35 mounting rail (screw-type terminals) WDU 2.5 1020000000 / (tension clamp terminals) ZDU 2.5 1608510000
*There are no pre-defined mounting points set within this enclosure for installing internal equipment in a vertical position.

### Number of cable entries

| Number of cable entries | A / B | C / D |
|---|---|---|
| M12 | 62 | 32 |
| M16 | 54 | 21 |
| M20 | 33 | 15 |
| M25 | 18 | 8 |
| M32 | 14 | 3 |
| M40 | 6 | 3 |
| M50 | 4 | 2 |
| M63 | | |

**Note** **Our IP 68 plastic cable glands fitted without a bruss plate (cruciform) serve as a reference for these recommended values.

## Klippon® POK 91

**Depth** 121 mm

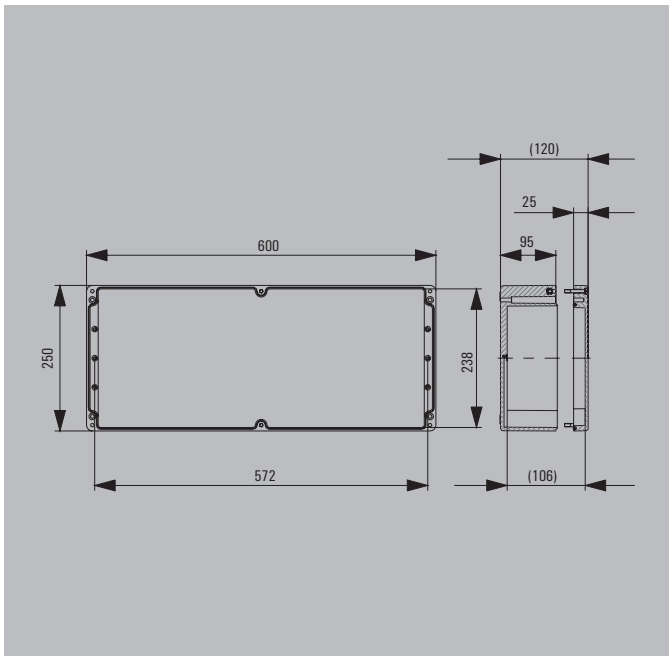


| | |
|---|---|
| Height/Width/Depth | 250 / 600 / 121 mm |

### Ordering data

| RAL 7001 | Order No. |
|---|---|
| Standard, grey | 9510470000 |
| **RAL 9011** | |
| Ex environment enclosure, black | 9510300000 |

**Note** The overview page lists the ambient temperatures. Colour variations may occur under certain circumstances.

### Accessories

| Terminal rail, Set | Order No. |
|---|---|
| 15 mm width | |
| **Mounting plate** | |
| Steel sheet, zinc plated | 9510660000 |
| **Hinge, diecast zinc, Set** | |
| | 1580360000 |
| **Brass Earth Continuity Plate** | |
| | 1391050000 |
| **External mounting feet, set of 4** | |
| | 9510910000 |

**Note** Accessories described above as sets, are supplied with fixing materials.
For this enclosure only two hinges are required to be fitted to the longest side.

### Max. number of terminals (industry)

| Assembly with terminal | vertical | horizontal |
|---|---|---|
| 2.5 mm² | * | 2x107 |
| 4 mm² | * | 2x89 |
| 6 mm² | * | 2x66 |
| 10 mm² | * | 2x53 |
| 16 mm² | * | 2x44 |

**Note** The mounting rails are designed to be installed directly.
Assembly with terminals provides for 10 mm clearance to the ends of the mounting rail.
Ordering recommendations:
TS 35 mounting rail (screw-type terminals) WDU 2.5 1020000000 / (tension clamp terminals) ZDU 2.5 1608510000
*There are no pre-defined mounting points set within this enclosure for installing internal equipment in a vertical position.

### Number of cable entries

| Number of cable entries | A / B | C / D |
|---|---|---|
| M12 | 96 | 32 |
| M16 | 80 | 21 |
| M20 | 24 | 15 |
| M25 | 20 | 8 |
| M32 | 20 | 3 |
| M40 | 8 | 3 |
| M50 | 6 | 2 |
| M63 | | |

**Note** **Our IP 68 plastic cable glands fitted without a bruss plate (cruciform) serve as a reference for these recommended values.

## Klippon® POK 10

**Depth** 121 mm

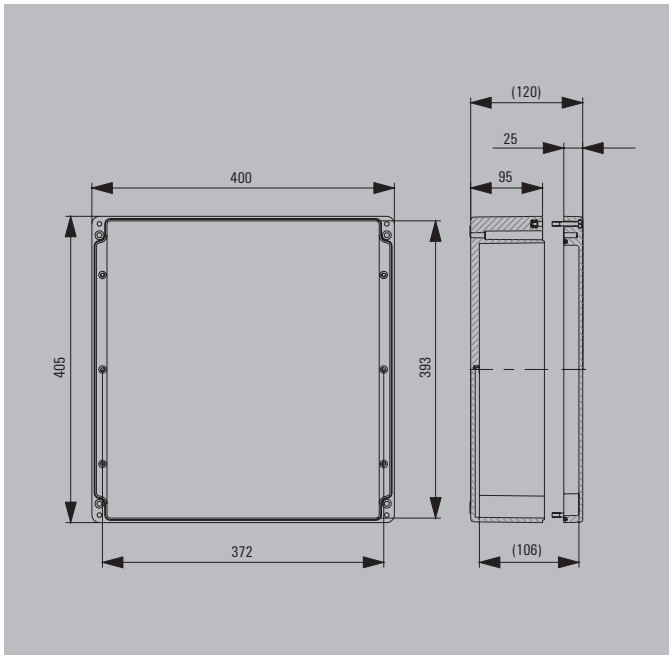


| | |
|---|---|
| Height/Width/Depth | 405 / 400 / 121 mm |

### Ordering data

| RAL 7001 | Order No. |
|---|---|
| Standard, grey | 1565440000 |
| **RAL 9011** | |
| Ex environment enclosure, black | 9510310000 |

**Note** The overview page lists the ambient temperatures. Colour variations may occur under certain circumstances.

### Accessories

| Terminal rail, Set | Order No. |
|---|---|
| 15 mm width | |
| **Mounting plate** | |
| Steel sheet, zinc plated | 9510670000 |
| **Hinge, diecast zinc, Set** | |
| | 1580360000 |
| **Brass Earth Continuity Plate** | |
| | 1391070000 |
| **External mounting feet, set of 4** | |
| | 9510910000 |

**Note** Accessories described above as sets, are supplied with fixing materials.
For this enclosure only two hinges are required to be fitted to the longest side.

### Max. number of terminals (industry)

| Assembly with terminal | vertical | horizontal |
|---|---|---|
| 2.5 mm² | * | 3x67 |
| 4 mm² | * | 3x55 |
| 6 mm² | * | 3x41 |
| 10 mm² | * | 3x33 |
| 16 mm² | * | 3x27 |

**Note** The mounting rails are designed to be installed directly.
Assembly with terminals provides for 10 mm clearance to the ends of the mounting rail.
Ordering recommendations:
TS 35 mounting rail (screw-type terminals) WDU 2.5 1020000000 / (tension clamp terminals) ZDU 2.5 1608510000
*There are no prescribed possible attachment points in the enclosures for vertical installations.

### Number of cable entries

| Number of cable entries | A / B | C / D |
|---|---|---|
| M12 | 62 | 60 |
| M16 | 54 | 39 |
| M20 | 33 | 30 |
| M25 | 18 | 18 |
| M32 | 14 | 7 |
| M40 | 6 | 5 |
| M50 | 4 | 4 |
| M63 | | |

**Note** **Our IP 68 plastic cable glands fitted without a bruss plate (cruciform) serve as a reference for these recommended values.

## Klippon® POK 11

**Depth** 161 mm

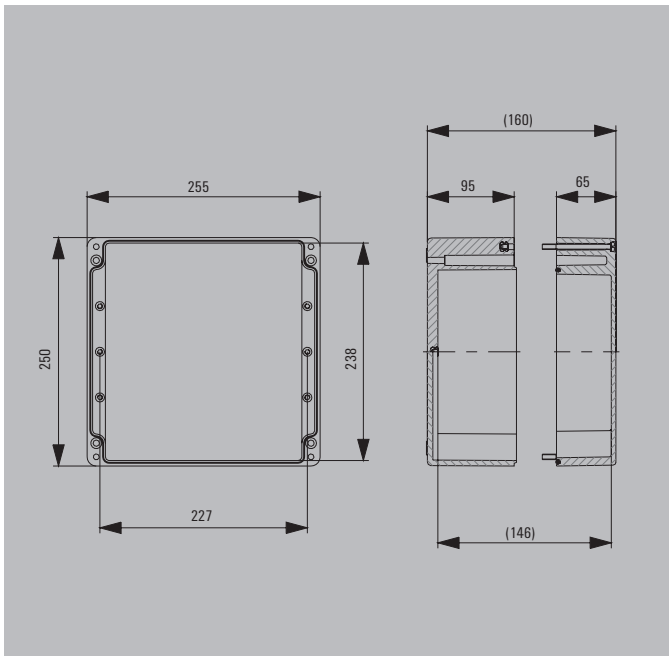


| | |
|---|---|
| Height/Width/Depth | 250 / 255 / 161 mm |

### Ordering data

| RAL 7001 | Order No. |
|---|---|
| Standard, grey | 9510530000 |
| **RAL 9011** | |
| Ex environment enclosure, black | 9510360000 |

**Note** The overview page lists the ambient temperatures. Colour variations may occur under certain circumstances.

### Accessories

| Terminal rail, Set | Order No. |
|---|---|
| 15 mm width | |
| **Mounting plate** | |
| Steel sheet, zinc plated | 9510640000 |
| **Hinge, diecast zinc, Set** | |
| | 1580360000 |
| **Brass Earth Continuity Plate** | |
| | 1391030000 |
| **External mounting feet, set of 4** | |
| | 9510910000 |

**Note** Accessories described above as sets, are supplied with fixing materials.
For this enclosure only two hinges are required to be fitted to the longest side.

### Max. number of terminals (industry)

| Assembly with terminal | vertical | horizontal |
|---|---|---|
| 2.5 mm² | * | 2x38 |
| 4 mm² | * | 2x31 |
| 6 mm² | * | 2x23 |
| 10 mm² | * | 2x19 |
| 16 mm² | * | 2x15 |

**Note** The mounting rails are designed to be installed directly.
Assembly with terminals provides for 10 mm clearance to the ends of the mounting rail.
Ordering recommendations:
TS 35 mounting rail (screw-type terminals) WDU 2.5 1020000000 / (tension clamp terminals) ZDU 2.5 1608510000
*There are no prescribed possible attachment points in the enclosures for vertical installations.

### Number of cable entries

| Number of cable entries | A / B | C / D |
|---|---|---|
| M12 | 36 | 32 |
| M16 | 32 | 21 |
| M20 | 18 | 15 |
| M25 | 10 | 8 |
| M32 | 8 | 3 |
| M40 | 3 | 3 |
| M50 | 2 | 2 |
| M63 | | |

**Note** **Our IP 68 plastic cable glands fitted without a bruss plate (cruciform) serve as a reference for these recommended values.

## Klippon® POK 12

**Depth 161 mm**

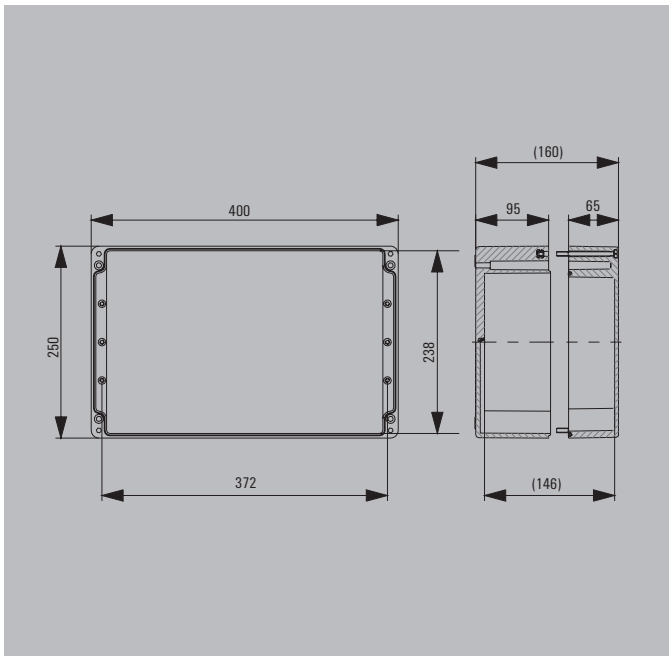


| | |
|---|---|
| Height/Width/Depth | 250 / 400 / 161 mm |

### Ordering data

| RAL 7001 | Order No. |
|---|---|
| Standard, grey | 9510540000 |
| **RAL 9011** | |
| Ex environment enclosure, black | 9510370000 |

**Note** The overview page lists the ambient temperatures. Colour variations may occur under certain circumstances.

### Accessories

| Terminal rail, Set | Order No. |
|---|---|
| 15 mm width | |
| **Mounting plate** | |
| Steel sheet, zinc plated | 9510650000 |
| **Hinge, diecast zinc, Set** | |
| | 1580360000 |
| **Brass Earth Continuity Plate** | |
| | 1391040000 |
| **External mounting feet, set of 4** | |
| | 9510910000 |

**Note** Accessories described above as sets, are supplied with fixing materials.
For this enclosure only two hinges are required to be fitted to the longest side.

### Max. number of terminals (industry)

| Assembly with terminal | vertical | horizontal |
|---|---|---|
| 2.5 mm² | * | 2x67 |
| 4 mm² | * | 2x55 |
| 6 mm² | * | 2x41 |
| 10 mm² | * | 2x33 |
| 16 mm² | * | 2x27 |

**Note** The mounting rails are designed to be installed directly.
Assembly with terminals provides for 10 mm clearance to the ends of the mounting rail.
Ordering recommendations:
TS 35 mounting rail (screw-type terminals) WDU 2.5 1020000000 / (tension clamp terminals) ZDU 2.5 1608510000
*There are no prescribed possible attachment points in the enclosures for vertical installations.

### Number of cable entries

| Number of cable entries | A / B | C / D |
|---|---|---|
| M12 | 62 | 32 |
| M16 | 54 | 21 |
| M20 | 33 | 15 |
| M25 | 18 | 8 |
| M32 | 14 | 3 |
| M40 | 6 | 3 |
| M50 | 4 | 2 |
| M63 | | |

**Note** **Our IP 68 plastic cable glands fitted without a bruss plate (cruciform) serve as a reference for these recommended values.

# Standardised distribution boxes – Product overview: Polyester enclosure

Use the product overview to find the right solution for you! Combine your own industrial version consisting of an enclosure, with or without threaded holes, a suitable mounting rail or pre-fitted terminal strips. The compatible components are always shown in a row.

Distribution boxes with Ex protection for use in explosive areas can be found in the last column. They come with threaded holes and are already equipped with a terminal strip.

## Polyester enclosure

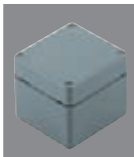

Empty enclosure without threaded holes

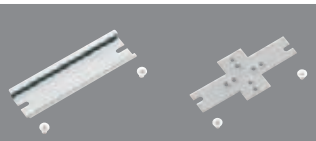

Mounting rail (TS)
Mounting plate (MOPL)

| Dimensions of the enclosure height x width x depth mm | Enclosure type | Order No. | Qty. | Type | Length mm | Rail mounting slot dimensions mm | Order No. | Qty. |
|---|---|---|---|---|---|---|---|---|
| **Polyester, RAL 7001** | | | | | | | | |
| **75 x 80 x 56** | Klippon® POK 1 | **1277200000** | 1 | TS 15 | 68 | 4.5 x 20 | **1928060000** | 1 |
| **75 x 110 x 56** | Klippon® POK 2 | **1277300000** | 1 | TS 15 | 98 | 4.5 x 20 | **1928070000** | 1 |
| **75 x 160 x 56** | Klippon® POK 3 | **1277400000** | 1 | TS 15 | 147 | 4.5 x 20 | **1928080000** | 1 |
| **120 x 122 x 91** | Klippon® POK 4 | **1277500000** | 1 | TS 35 | 105 | 6.3 x 20 | **1910070000** | 1 |
| **160 x 160 x 91** | Klippon® POK 51 | **1565410000** | 1 | TS 35 | 140 | 6.3 x 20 | **1910100000** | 1 |
| | | protection class IP 66 | | suitable for the enclosure of the respective line | | | | |

[1] Multi-pole terminal blocks (block terminals BK 4, BK 6 or BK 12) can be directly fitted
[2] Space for further threaded holes up to M32

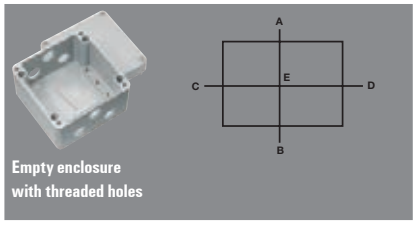


Empty enclosure with threaded holes

Terminal strip

Ex protected distribution boxes

| Threaded hole Side A | Threaded hole Side B | Order No. | Qty. | Connection technology | | Cross-section mm² | Number of DU* | Number of PE* | Order No. | Qty. | Order No. |
|---|---|---|---|---|---|---|---|---|---|---|---|
| 2x M16 | 2x M16 | 8000004160 | 1 | Screw connection | | 4 | 4 | 0 | 8000004365[1] | 1 | 8000004222 |
| 2x M16 | 2x M16 | | | Screw connection | | 4 | 6 | 2 | 8000004144 | 1 | 8000004223 |
| 2x M20 | 2x M20 | 8000004161 | 1 | Screw connection | | 4 | 6 | 0 | 8000004366[1] | 1 | 8000004224 |
| 2x M20 | 2x M20 | | | Screw connection | | 4 | 10 | 2 | 8000004145 | 1 | 8000004225 |
| 4x M20 | 4x M20 | 8000004162 | 1 | Screw connection | | 4 | 12 | 0 | 8000004367[1] | 1 | 8000004226 |
| 4x M20 | 4x M20 | | | Screw connection | | 4 | 18 | 2 | 8000004146 | 1 | 8000004228 |
| 3x M20 | 3x M20 | 8000003448 | 1 | Screw connection | | 4 | 12 | 2 | 8000003444 | 1 | 8000003593 |
| 3x M20 | 3x M20 | | | Tension clamp connection | | 4 | 9 | 2 | 8000003445 | 1 | 8000003594 |
| 4x M20 | 4x M20 | 8000004164[2] | 1 | Screw connection | | 4 | 16 | 2 | 8000004142 | 1 | 8000004229 |
| 4x M20 | 4x M20 | | | Tension clamp connection | | 2.5 | 19 | 2 | 8000004143 | 1 | 8000004230 |

suitable for the enclosures of the respective line
*DU = feed-through terminals, PE = PE terminals

Ex enclosure with an external earthing connection, holes and strip terminals in each row

## Klippon® POK1

**56 mm**

| Height / Width / Depth | 75 / 80 / 56 mm |
|---|---|

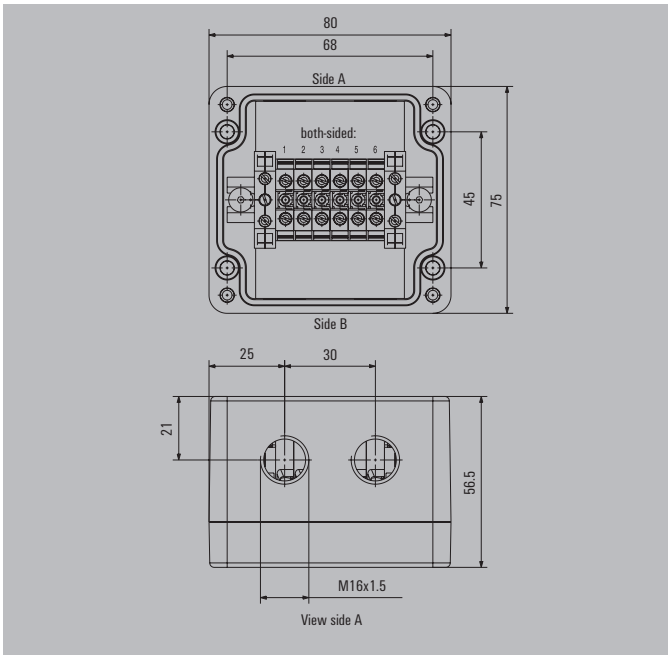


### Accessories

| Stopping plugs | | Order No. |
|---|---|---|
| | KSPM M16 PL | 1209890000 |
| | VP M16-EXE MS | 1737140000 |

### Empty enclosure with tapped holes

| | Drill holes side A | Drill holes side B | Order No. |
|---|---|---|---|
| | 2 x M16x1.5 | 2 x M16x1.5 | 8000004160 |

**Note** Enclosures are delivered in RAL 7001.

**Note** You can find markers and labels in the Terminal Block Catalogue. Wall-mounted holders can be found in Chapter B under Klippon® POK

### Terminal block, suitable for empty enclosure

| | Type | Type of connection | Conductor can be clamped | Rated cross-section | No. of DU* | No. of PE* | Order No. |
|---|---|---|---|---|---|---|---|
| | BK 4/E | Screw connection | Solid / stranded<br>Flexible / flexible with wire-end ferrule | 0.5...4 mm² / 1.5...4 mm²<br>0.5...4 mm² / 0.5...4 mm² | 4 | 0 | 8000004365 |
| | AKZ 4 | Screw connection | Solid / stranded<br>Flexible / flexible with wire-end ferrule | 0.5...6 mm² / 1.5...4 mm²<br>0.5...4 mm² / 0.5...2.5 mm² | 6 | 2 | 8000004144 |

**Note** Markers numbered 1-50 (horizontal text) and mounting screws are included in the delivery.
*DU = feed-through terminals, PE = PE terminals

### Distribution box with ATEX II 2GD T85°C Ex e II T6

| Drill holes side A | Drill holes side B | No. of DU* | No. of PE* | Order No. |
|---|---|---|---|---|
| 2 x M16x1.5 | 2 x M16x1.5 | 6 | 2 | 8000004223 |
| 2 x M16x1.5 | 2 x M16x1.5 | 4 | 0 | 8000004222 |

**Note** Enclosures are delivered in RAL 9011.
*DU = feed-through terminals, PE = PE terminals

### Terminal rail / mounting plate set

| | Product type | Type | Length | Order No. |
|---|---|---|---|---|
| | Mounting rail | TS15 68 Klippon POK1 CSS | 68 mm | 1928060000 |

**Note** Supplied with mounting screws for the mounting rail or mounting plate

## Klippon® POK2

**56 mm**

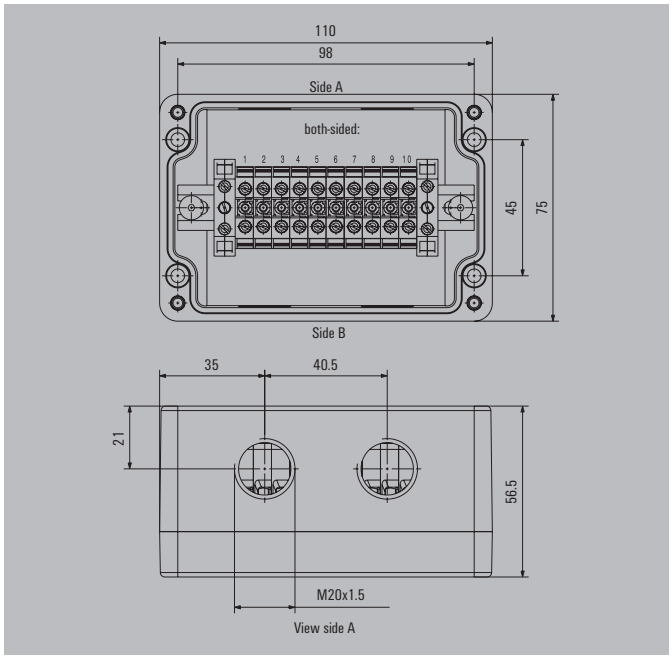


| | |
|---|---|
| Height / Width / Depth | 75 / 110 / 56 mm |

### Accessories

| Cable glands | | Order No. |
|---|---|---|
| | KSG M20 BN 0 NI 2 G20 | 1911560000 |
| **Stopping plugs** | | |
| | KSPM M20 PL | 1209910000 |
| | VP M20-EXE MS | 1737150000 |
| **Adapters** | | |
| | ADAP EX M20-M16 | 1737560000 |

### Empty enclosure with tapped holes

| | Drill holes side A | Drill holes side B | Order No. |
|---|---|---|---|
| | 2 x M20x1.5 | 2 x M20x1.5 | 8000004161 |

**Note** Enclosures are delivered in RAL 7001.

**Note** You can find markers and labels in the Terminal Block Catalogue. Wall-mounted holders can be found in Chapter B under Klippon® POK

### Terminal block, suitable for empty enclosure

| | Type | Type of connection | Conductor can be clamped | Rated cross-section | No. of DU* | No. of PE* | Order No. |
|---|---|---|---|---|---|---|---|
| | BK 6/E | Screw connection | Solid / stranded<br>Flexible / flexible with wire-end ferrule | 0.5...4 mm² / 1.5...4 mm²<br>0.5...4 mm² / 0.5...4 mm² | 6 | 0 | 8000004366 |
| | AKZ 4 | Screw connection | Solid / stranded<br>Flexible / flexible with wire-end ferrule | 0.5...6 mm² / 1.5...4 mm²<br>0.5...4 mm² / 0.5...2.5 mm² | 10 | 2 | 8000004145 |

**Note** Markers numbered 1-50 (horizontal text) and mounting screws are included in the delivery.
*DU = feed-through terminals, PE = PE terminals

### Distribution box with ATEX II 2GD T85°C Ex e II T6

| Drill holes side A | Drill holes side B | No. of DU* | No. of PE* | Order No. |
|---|---|---|---|---|
| 2 x M20x1.5 | 2 x M20x1.5 | 10 | 2 | 8000004225 |
| 2 x M20x1.5 | 2 x M20x1.5 | 6 | 0 | 8000004224 |

**Note** Enclosures are delivered in RAL 9011.
*DU = feed-through terminals, PE = PE terminals

### Terminal rail / mounting plate set

| | Product type | Type | Length | Order No. |
|---|---|---|---|---|
| | Mounting rail | TS15 98 Klippon POK2 CSS | 98 mm | 1928070000 |

**Note** Supplied with mounting screws for the mounting rail or mounting plate

## Klippon® POK3

**56 mm**

| Height / Width / Depth | 75 / 160 / 56 mm |
|---|---|

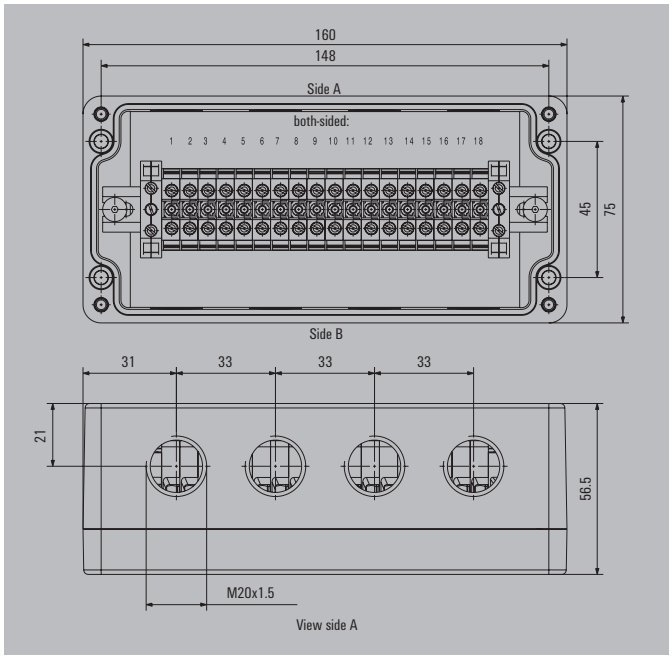


### Accessories

| Cable glands | Order No. |
|---|---|
| KSG M20 BN 0 NI 2 G20 | 1911560000 |
| **Stopping plugs** | |
| KSPM M20 PL | 1209910000 |
| VP M20-EXE MS | 1737150000 |
| **Adapters** | |
| ADAP EX M20-M16 | 1737560000 |

### Empty enclosure with tapped holes

| Drill holes side A | Drill holes side B | Order No. |
|---|---|---|
| 4 x M20x1.5 | 4 x M20x1.5 | 8000004162 |

**Note** Enclosures are delivered in RAL 7001.

**Note** You can find markers and labels in the Terminal Block Catalogue. Wall-mounted holders can be found in Chapter B under Klippon® POK

### Terminal block, suitable for empty enclosure

| Type | Type of connection | Conductor can be clamped | Rated cross-section | No. of DU* | No. of PE* | Order No. |
|---|---|---|---|---|---|---|
| BK 12/E | Screw connection | Solid / stranded<br>Flexible / flexible with wire-end ferrule | 0.5...4 mm² / 1.5...4 mm²<br>0.5...4 mm² / 0.5...4 mm² | 12 | 0 | 8000004367 |
| AKZ 4 | Screw connection | Solid / stranded<br>Flexible / flexible with wire-end ferrule | 0.5...6 mm² / 1.5...4 mm²<br>0.5...4 mm² / 0.5...2.5 mm² | 18 | 2 | 8000004146 |

**Note** Markers numbered 1-50 (horizontal text) and mounting screws are included in the delivery.
*DU = feed-through terminals, PE = PE terminals

### Distribution box with ATEX II 2GD T85°C Ex e II T6

| Drill holes side A | Drill holes side B | No. of DU* | No. of PE* | Order No. |
|---|---|---|---|---|
| 4 x M20x1.5 | 4 x M20x1.5 | 18 | 2 | 8000004228 |
| 4 x M20x1.5 | 4 x M20x1.5 | 12 | 0 | 8000004226 |

**Note** Enclosures are delivered in RAL 9011.
*DU = feed-through terminals, PE = PE terminals

### Terminal rail / mounting plate set

| Product type | Type | Length | Order No. |
|---|---|---|---|
| Mounting rail | TS15 147 Klippon POK3 CSS | 147 mm | 1928080000 |

**Note** Supplied with mounting screws for the mounting rail or mounting plate

## Klippon® POK4

**91 mm**

| Height / Width / Depth | 120 / 122 / 91 mm |
|---|---|

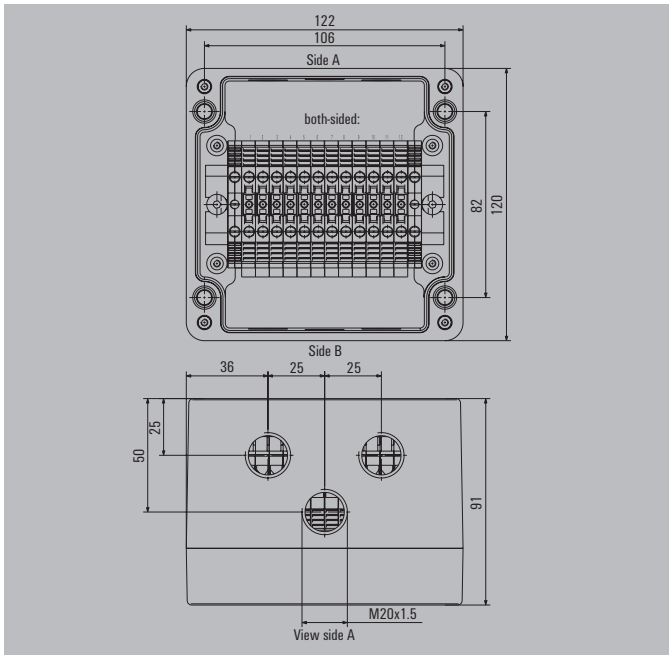


### Accessories

| Cable glands | Order No. |
|---|---|
| KSG M20 BN 0 NI 2 G20 | 1911560000 |
| | |
| | |
| **Stopping plugs** | |
| KSPM M20 PL | 1209910000 |
| VP M20-EXE MS | 1737150000 |
| | |
| **Adapters** | |
| ADAP EX M20-M16 | 1737560000 |
| | |
| | |

### Empty enclosure with tapped holes

| Drill holes side A | Drill holes side B | Order No. |
|---|---|---|
| 3 x M20x1.5 | 3 x M20x1.5 | 8000003448 |

**Note** Enclosures are delivered in RAL 7001.

**Note** You can find markers and labels in the Terminal Block Catalogue. Wall-mounted holders can be found in Chapter B under Klippon® POK

### Terminal block, suitable for empty enclosure

| Type | Type of connection | Conductor can be clamped | Rated cross-section | No. of DU* | No. of PE* | Order No. |
|---|---|---|---|---|---|---|
| ZDU 4-2/3AN | Tension clamp connection | Solid / stranded | 0.5...6 mm² / ... | 9 | 2 | 8000003445 |
| | | Flexible / flexible with wire-end ferrule | 0.5...4 mm² / 0.5...4 mm² | | | |
| WDU 4 | Screw connection | Solid / stranded | 0.5...6 mm² / 1.5...6 mm² | 12 | 2 | 8000003444 |
| | | Flexible / flexible with wire-end ferrule | 0.5...6 mm² / 0.5...4 mm² | | | |

**Note** Markers numbered 1-50 (horizontal text) and mounting screws are included in the delivery.
*DU = feed-through terminals, PE = PE terminals

### Distribution box with ATEX II 2GD T85°C Ex e II T6

| Drill holes side A | Drill holes side B | No. of DU* | No. of PE* | Order No. |
|---|---|---|---|---|
| 3 x M20x1.5 | 3 x M20x1.5 | 12 | 2 | 8000003593 |
| 3 x M20x1.5 | 3 x M20x1.5 | 9 | 2 | 8000003594 |

**Note** Enclosures are delivered in RAL 9011.
*DU = feed-through terminals, PE = PE terminals

### Terminal rail / mounting plate set

| Product type | Type | Length | Order No. |
|---|---|---|---|
| Mounting rail | TS35 105 Klippon K41/POK4 | 105 mm | 1910070000 |

**Note** Supplied with mounting screws for the mounting rail or mounting plate

## Klippon® POK51

**91 mm**

| Height / Width / Depth | 160 / 160 / 91 mm |
|---|---|

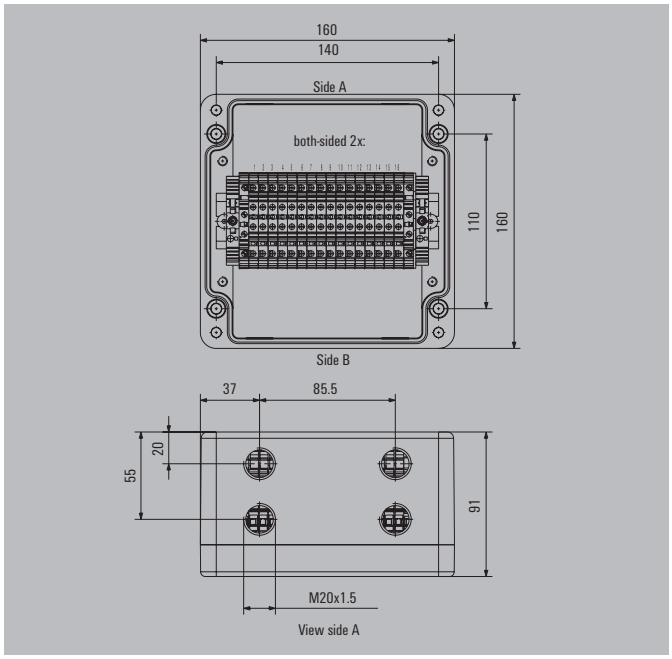


### Accessories

| Cable glands | Order No. |
|---|---|
| KSG M20 BN 0 NI 2 G20 | 1911560000 |
| **Stopping plugs** | |
| KSPM M20 PL | 1209910000 |
| VP M20-EXE MS | 1737150000 |
| **Adapters** | |
| ADAP EX M20-M16 | 1737560000 |

### Empty enclosure with tapped holes

| Drill holes side A | Drill holes side B | Order No. |
|---|---|---|
| 4 x M20x1.5 | 4 x M20x1.5 | 8000004164 |

**Note** Enclosures are delivered in RAL 7001. Space for further holes up to M40 is available.

**Note** You can find markers and labels in the Terminal Block Catalogue. Wall-mounted holders can be found in Chapter B under Klippon® POK

### Terminal block, suitable for empty enclosure

| Type | Type of connection | Conductor can be clamped | Rated cross-section | No. of DU* | No. of PE* | Order No. |
|---|---|---|---|---|---|---|
| ZDK 2.5 | Tension clamp connection | Solid / stranded | 0.5...2.5 mm² / ... | 19 | 2 | 8000004143 |
| | | Flexible / flexible with wire-end ferrule | 0.5...2.5 mm² / 0.5...2.5 mm² | | | |
| WDK 4N | Screw connection | Solid / stranded | 0.5...6 mm² / 1.5...6 mm² | 16 | 2 | 8000004142 |
| | | Flexible / flexible with wire-end ferrule | 0.5...4 mm² / 0.5...4 mm² | | | |

**Note** Markers numbered 1-50 (horizontal text) and mounting screws are included in the delivery.
*DU = feed-through terminals, PE = PE terminals

### Distribution box with ATEX II 2GD T85°C Ex e II T6

| Drill holes side A | Drill holes side B | No. of DU* | No. of PE* | Order No. |
|---|---|---|---|---|
| 4 x M20x1.5 | 4 x M20x1.5 | 16 | 2 | 8000004229 |
| 4 x M20x1.5 | 4 x M20x1.5 | 19 | 2 | 8000004230 |

**Note** Enclosures are delivered in RAL 9011.
*DU = feed-through terminals, PE = PE terminals

### Terminal rail / mounting plate set

| Product type | Type | Length | Order No. |
|---|---|---|---|
| Mounting rail | TS35/140 Klippon K52 POK51 | 140 mm | 1910100000 |

**Note** Supplied with mounting screws for the mounting rail or mounting plate

# TBF – Large polyester enclosures

The enclosures in the TBF range are made from sturdy glass-fibre reinforced polyester. They offer a universal solution for protection of components such as controllers, measuring instruments, valves and other devices. Suitable applications include photovoltaics and energy distribution.

Key features of this product range range include:
- Available in 9 sizes, with grey or transparent lids
- The lid has nylon screws fitted
- Mounting holes are outside the sealed area
- Thread for fitting to terminal rails and mounting plates
- High Ingress Protection (IP 66 and IP 67)

Weidmüller can manufacture and supply this enclosure to match customer specifications and fitted with all necessary terminals and cable glands.

## Overview of enclosures

### Ordering data

| Description | Dimensions in mm | Grey lid | Transparent lid |
|---|---|---|---|
| TBF 19/15 | 186 x 151 x 140 | 0360100000 | 0500500000 |
| TBF 30/19 | 302 x 186 x 175 | 0360200000 | 0500600000 |
| TBF 30/30 | 302 x 302 x 175 | 0360300000 | 0500700000 |
| TBF 37/30 | 372 x 302 x 175 | 0360400000 | 0500800000 |
| TBF 49/30 | 488 x 302 x175 / 210 | 9502800000 | 9502840000 |
| TBF 56/30 | 558 x 302 x 175 / 210 | 9502810000 | 9502850000 |
| TBF 60/30 | 603 x 302 x 175 / 210 | 0360500000 | 0500900000 |
| TBF 60/37 | 603 x 372 x 175 / 210 | 9502820000 | 9502860000 |
| TBF 60/60 | 603 x 603 x 175 / 210 | 9502830000 | 9502870000 |
| Note | | | |

## Technical Overview

### Features

- Extremely tough and impact resistant thanks to the glass-fibre reinforced polyester
- Extremely weather resistant
- High IP rating
- Approved according to the latest international standards (e.g. GOST)

**Note** We deliver enclosures through our assembly service which are ready to be connected and suitable for every application.

### Technical data

| | Grey lid | Transparent lid |
|---|---|---|
| Enclosure material | Base and lid made of glass-fibre reinforced polyester (GRP) | Base made of glass-fibre reinforced polyester (GRP)<br>Lid is polycarbonate (PC) |
| Surface finish | grey, similar to RAL 7035 | |
| IP protection class | IP 67 | IP 66 |
| Installation mounting | 4 or 6 M4 clamping screws | 4 or 6 M4 clamping screws |
| Enclosure mounting | 4 holes of 7 mm diameter or with external fastening lugs,<br>see accessories | 4 holes of 7 mm diameter or with external fastening lugs,<br>see accessories |
| Lid fixing | 4 or 6 captive cross-headed nylon screws | 4 or 6 captive cross-headed nylon screws |
| Impact resistance | 4 J | 7 J |
| Gasket material | Polyurethane | Polyurethane |
| Temperature range | -50 °C...+150 °C | -50 °C...+130 °C |
| Flammability characteristics | UL 94 HB | V2 |
| Toxicity | Free from halogens | Free from halogens |
| **Note** | | |

| | TBF 19/15 | 140 mm | TBF 30/19 | 175 mm |
|---|---|---|---|---|
| | 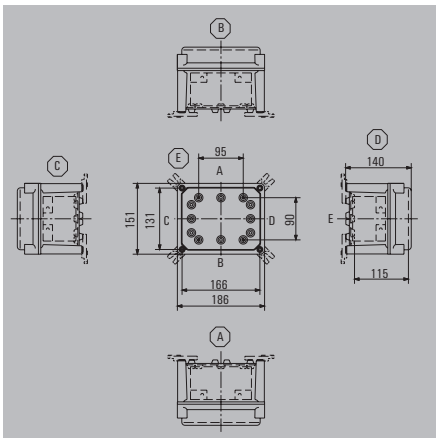 | | 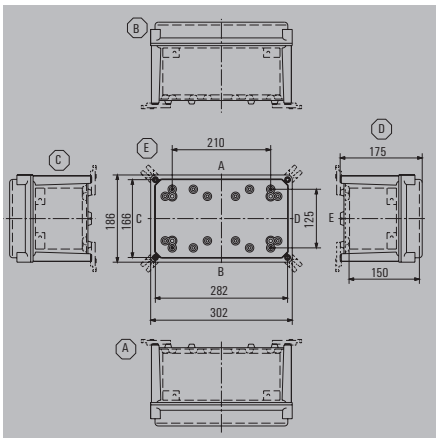 | |
| Height / Width / Depth | 186 / 151 / 140 mm | | 302 / 186 / 175 mm | |

## Technical data

| Assembly with terminal | vertical | horizontal | vertical | horizontal |
|---|---|---|---|---|
| 2.5 mm² | 1x11 | 1x18 | 2x22 | 1x44 |
| 4 mm² | 1x9 | 1x15 | 2x18 | 1x37 |
| 6 mm² | 1x7 | 1x7 | 2x14 | 2x14 |
| 10 mm² | 1x6 | 1x9 | 2x11 | 1x22 |
| 16 mm² | 1x4 | 1x6 | 2x8 | 1x16 |
| 35 mm² | 1x3 | 1x5 | 2x7 | 1x14 |
| **Number of cable entries** | **A / B** | **C / D** | **A / B** | **C / D** |
| M12 | 11 | 11 | 28 | 53 |
| M16 | 6 | 6 | 14 | 30 |
| M20 | 2 | 2 | 11 | 22 |
| M25 | 2 | 2 | 6 | 10 |
| M32 | 1 | 1 | 3 | 5 |
| M40 | 1 | 1 | 3 | 3 |
| M50 | | | 1 | 3 |
| M63 | | | 1 | 2 |
| M75 | | | | |
| **Note** | | | | |

## Ordering data

| | Type | Qty. | Order No. | Type | Qty. | Order No. |
|---|---|---|---|---|---|---|
| Enclosure with grey lid | TBF 19/15/14 7035 | 1 | 0360100000 | TBF 30/19/18 7035 | 1 | 0360200000 |
| Enclosure with transparent lid | TBF 19/15/14 trsp | 1 | 0500500000 | TBF 30/19/18 trsp | 1 | 0500600000 |
| **Note** | | | | | | |

## Accessories

| | Type | Qty. | Order No. | Type | Qty. | Order No. |
|---|---|---|---|---|---|---|
| **Mounting plates and fastening screws** | | | | | | |
| Steel sheet, zinc plated | MP TBF 19/15 | 1 | 9502720000 | MP TBF 30/19 | 1 | 3018950000 |
| **External mounting lug, set of 4** | | | | | | |
| Polyamide | MF TBF | 1 | 0360800000 | MF TBF | 1 | 0360800000 |
| **Earthing stud** | | | | | | |
| M6, Brass | ES TBF M6 brass | 1 | 9502700000 | ES TBF M6 brass | 1 | 9502700000 |
| M6, Stainless steal | ES TBF M6 ss | 1 | 9505240000 | ES TBF M6 ss | 1 | 9505240000 |
| M10, Brass | ES TBF M10 brass | 1 | 9502710000 | ES TBF M10 brass | 1 | 9502710000 |
| M10, Stainless steal | ES TBF M10 ss | 1 | 9500870000 | ES TBF M10 ss | 1 | 9500870000 |
| **Expansion frame** | | | | | | |
| Polyamide | EF TBF 19/15 | 1 | 9502930000 | | | |
| **Note** | If using an extension frame, the protection class (IP) is reduced. | | | | | |

| | TBF 30/30 | 175 mm | TBF 37/30 | 175 mm |
|---|---|---|---|---|

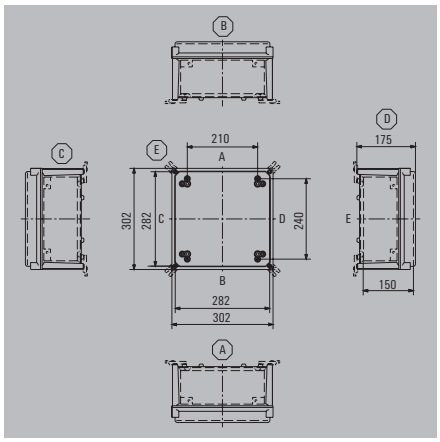


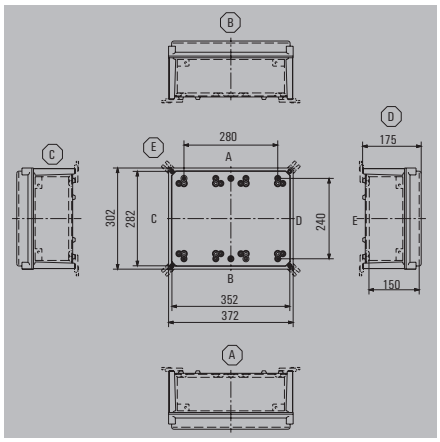


| | | |
|---|---|---|
| Height / Width / Depth | 302 / 302 / 175 mm | 372 / 302 / 175 mm |

## Technical data

| Assembly with terminal | vertical | horizontal | vertical | horizontal |
|---|---|---|---|---|
| 2.5 mm² | 2x44 | 1x44 | 2x57 | 2x44 |
| 4 mm² | 2x37 | 1x37 | 2x48 | 2x37 |
| 6 mm² | 2x28 | 2x28 | 2x36 | 2x36 |
| 10 mm² | 2x22 | 1x22 | 2x29 | 2x22 |
| 16 mm² | 2x16 | 1x16 | 2x21 | 2x16 |
| 35 mm² | 2x14 | 1x14 | 2x18 | 2x14 |
| **Number of cable entries** | **A / B** | **C / D** | **A / B** | **C / D** |
| M12 | 44 | 44 | 44 | 56 |
| M16 | 24 | 24 | 24 | 30 |
| M20 | 20 | 20 | 20 | 27 |
| M25 | 10 | 10 | 10 | 12 |
| M32 | 4 | 4 | 4 | 5 |
| M40 | 3 | 3 | 3 | 4 |
| M50 | 3 | 3 | 3 | 4 |
| M63 | 2 | 2 | 2 | 3 |
| M75 | | | | |
| **Note** | | | | |

## Ordering data

| | Type | Qty. | Order No. | Type | Qty. | Order No. |
|---|---|---|---|---|---|---|
| Enclosure with grey lid | TBF 30/30/18 7035 | 1 | 0360300000 | TBF 37/30/18 7035 | 1 | 0360400000 |
| Enclosure with transparent lid | TBF 30/30/18 trsp | 1 | 0500700000 | TBF 37/30/18 trsp | 1 | 0500800000 |
| **Note** | | | | | | |

## Accessories

| | Type | Qty. | Order No. | Type | Qty. | Order No. |
|---|---|---|---|---|---|---|
| **Mounting plates and fastening screws** | | | | | | |
| Steel sheet, zinc plated | MP TBF 30/30 | 1 | 9502730000 | MP TBF 37/30 | 1 | 9502740000 |
| **External mounting lug, set of 4** | | | | | | |
| Polyamide | MF TBF | 1 | 0360800000 | MF TBF | 1 | 0360800000 |
| **Earthing stud** | | | | | | |
| M6, Brass | ES TBF M6 brass | 1 | 9502700000 | ES TBF M6 brass | 1 | 9502700000 |
| M6, Stainless steal | ES TBF M6 ss | 1 | 9505240000 | ES TBF M6 ss | 1 | 9505240000 |
| M10, Brass | ES TBF M10 brass | 1 | 9502710000 | ES TBF M10 brass | 1 | 9502710000 |
| M10, Stainless steal | ES TBF M10 ss | 1 | 9500870000 | ES TBF M10 ss | 1 | 9500870000 |
| **Expansion frame** | | | | | | |
| Polyamide | EF TBF 30/30 | 1 | 9502950000 | EF TBF 37/30 | 1 | 9502960000 |
| **Note** | If using an extension frame, the protection class (IP) is reduced. | | | If using an extension frame, the protection class (IP) is reduced. | | |

| | TBF 49/30 | 175 mm | TBF 56/30 | 175 mm |
|---|---|---|---|---|

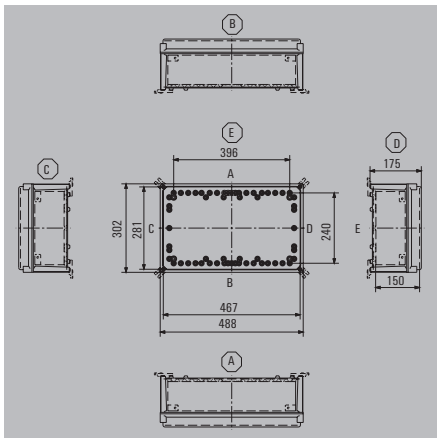


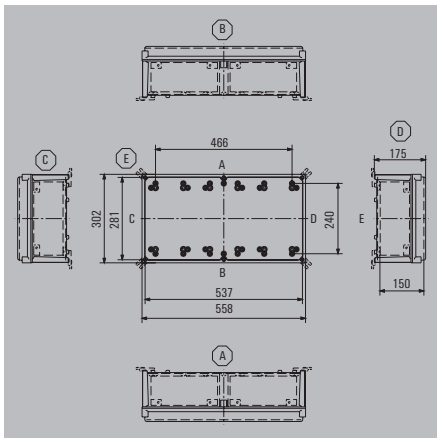


| Height / Width / Depth | 488 / 302 / 210 mm | 558 / 302 / 210 mm |
|---|---|---|

## Technical data

| Assembly with terminal | vertical | horizontal | vertical | horizontal |
|---|---|---|---|---|
| 2.5 mm² | 2x80 | 3x44 | 2x94 | 4x44 |
| 4 mm² | 2x67 | 3x37 | 2x79 | 4x37 |
| 6 mm² | 2x51 | 2x51 | 2x59 | 2x59 |
| 10 mm² | 2x41 | 3x22 | 2x48 | 4x22 |
| 16 mm² | 2x29 | 3x16 | 2x34 | 4x16 |
| 35 mm² | 2x25 | 3x14 | 2x30 | 4x14 |
| **Number of cable entries** | **A / B** | **C / D** | **A / B** | **C / D** |
| M12 | 44 | 42 | 44 | 80 |
| M16 | 24 | 42 | 24 | 46 |
| M20 | 20 | 36 | 20 | 40 |
| M25 | 10 | 18 | 10 | 18 |
| M32 | 4 | 7 | 4 | 8 |
| M40 | 3 | 5 | 3 | 6 |
| M50 | 3 | 5 | 3 | 4 |
| M63 | 2 | 4 | 2 | 4 |
| M75 | | | | |
| **Note** | | | | |

## Ordering data

| | Type | Qty. | Order No. | Type | Qty. | Order No. |
|---|---|---|---|---|---|---|
| Enclosure with grey lid | TBF 49/30/18 7035 | 1 | 9502800000 | TBF 56/30/18 7035 | 1 | 9502810000 |
| Enclosure with transparent lid | TBF 49/30/21 trsp | 1 | 9502840000 | TBF 56/30/21 trsp | 1 | 9502850000 |
| **Note** | Grey lid: 130 mm internal height, 175 mm total height<br>Transparent lid: 160 mm internal height, 210 mm total height | | | Grey lid: 130 mm internal height, 175 mm total height<br>Transparent lid: 160 mm internal height, 210 mm total height | | |

## Accessories

| Mounting plates and fastening screws | Type | Qty. | Order No. | Type | Qty. | Order No. |
|---|---|---|---|---|---|---|
| Steel sheet, zinc plated | MP TBF 49/30 | 1 | 9500960000 | MP TBF 56/30 | 1 | 9500950000 |
| **External mounting lug, set of 4** | | | | | | |
| Polyamide | MF TBF | 1 | 0360800000 | MF TBF | 1 | 0360800000 |
| **Earthing stud** | | | | | | |
| M6, Brass | ES TBF M6 brass | 1 | 9502700000 | ES TBF M6 brass | 1 | 9502700000 |
| M6, Stainless steal | ES TBF M6 ss | 1 | 9505240000 | ES TBF M6 ss | 1 | 9505240000 |
| M10, Brass | ES TBF M10 brass | 1 | 9502710000 | ES TBF M10 brass | 1 | 9502710000 |
| M10, Stainless steal | ES TBF M10 ss | 1 | 9500870000 | ES TBF M10 ss | 1 | 9500870000 |
| **Note** | | | | | | |

## TBF 60/30 — 175 mm

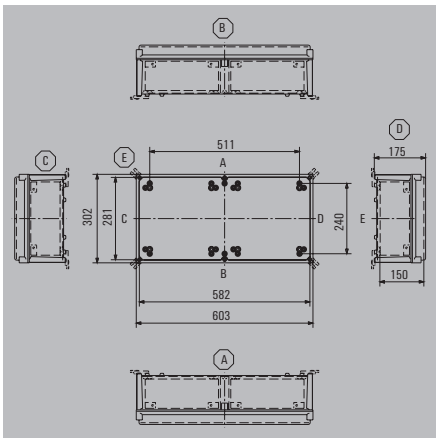


| | |
|---|---|
| Height / Width / Depth | 603 / 302 / 210 mm |

## Technical data

| Assembly with terminal | vertical | horizontal |
|---|---|---|
| 2.5 mm² | 5x44 | 1x101 |
| 4 mm² | 5x37 | 1x85 |
| 6 mm² | 5x28 | 5x28 |
| 10 mm² | 5x22 | 1x51 |
| 16 mm² | 5x16 | 1x37 |
| 35 mm² | 5x14 | 1x32 |
| **Number of cable entries** | **A / B** | **C / D** |
| M12 | 44 | 88 |
| M16 | 24 | 48 |
| M20 | 20 | 40 |
| M25 | 10 | 20 |
| M32 | 4 | 8 |
| M40 | 3 | 6 |
| M50 | 3 | 6 |
| M63 | 2 | 4 |
| M75 | | |
| **Note** | | |

## Ordering data

| | Type | Order No. |
|---|---|---|
| Enclosure with grey lid | TBF 60/30/18 7035 | 0360500000 |
| Enclosure with transparent lid | TBF 60/30/21 trsp | 0500900000 |
| **Note** | Grey lid: 130 mm internal height, 175 mm total height<br>Transparent lid: 160 mm internal height, 210 mm total height | |

## Accessories

| | Type | Qty. | Order No. |
|---|---|---|---|
| **Mounting plates and fastening screws** | | | |
| Steel sheet, zinc plated | MP TBF 60/30 | 1 | 9502750000 |
| **External mounting lug, set of 4** | | | |
| Polyamide | MF TBF | 1 | 0360800000 |
| **Earthing stud** | | | |
| M6, Brass | ES TBF M6 brass | 1 | 9502700000 |
| M6, Stainless steal | ES TBF M6 ss | 1 | 9505240000 |
| M10, Brass | ES TBF M10 brass | 1 | 9502710000 |
| M10, Stainless steal | ES TBF M10 ss | 1 | 9500870000 |
| **Expansion frame** | | | |
| Polyamide | EF TBF 60/30 | 1 | 9502990000 |
| **Note** | If using an extension frame, the protection class (IP) is reduced. | | |

## TBF - Polyester enclosures

| | TBF 60/37 175 mm | TBF 60/60 175 mm |
|---|---|---|
| | 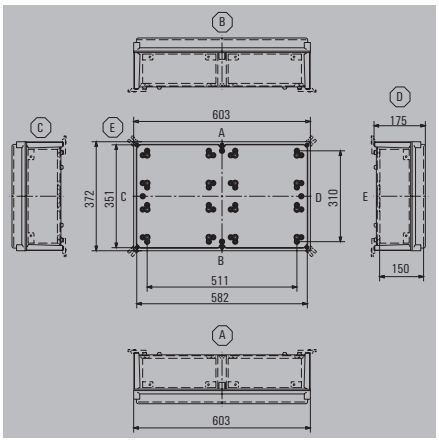 | 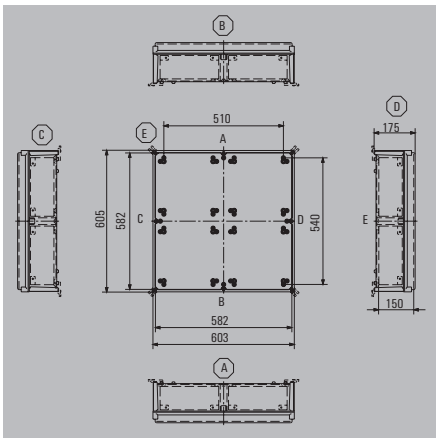 |
| Height / Width / Depth | 603 / 372 / 210 mm | 603 / 605 / 210 mm |

### Technical data

| Assembly with terminal | vertical | horizontal | vertical | horizontal |
|---|---|---|---|---|
| 2.5 mm² | 5x57 | 2x101 | 5x101 | 4x101 |
| 4 mm² | 5x48 | 2x85 | 5x85 | 4x85 |
| 6 mm² | 5x36 | 5x36 | 5x64 | 5x64 |
| 10 mm² | 5x29 | 2x51 | 5x51 | 4x51 |
| 16 mm² | 5x21 | 2x37 | 5x37 | 4x37 |
| 35 mm² | 5x18 | 2x32 | 5x32 | 4x32 |
| **Number of cable entries** | **A / B** | **C / D** | **A / B** | **C / D** |
| M12 | 52 | 88 | 88 | 88 |
| M16 | 30 | 48 | 48 | 48 |
| M20 | 26 | 40 | 40 | 40 |
| M25 | 12 | 20 | 20 | 20 |
| M32 | 5 | 8 | 8 | 8 |
| M40 | 4 | 6 | 6 | 6 |
| M50 | 4 | 6 | 6 | 6 |
| M63 | 3 | 4 | 4 | 4 |
| M75 | | | | |
| **Note** | | | | |

### Ordering data

| | Type | Qty. | Order No. | Type | Qty. | Order No. |
|---|---|---|---|---|---|---|
| Enclosure with grey lid | TBF 60/37/18 7035 | 1 | 9502820000 | TBF 60/60/18 7035 | 1 | 9502830000 |
| Enclosure with transparent lid | TBF 60/37/21 trsp | 1 | 9502860000 | TBF 60/60/21 trsp | 1 | 9502870000 |
| **Note** | Grey lid: 130 mm internal height, 175 mm total height<br>Transparent lid: 160 mm internal height, 210 mm total height | | | Grey lid: 130 mm internal height, 175 mm total height<br>Transparent lid: 160 mm internal height, 210 mm total height | | |

### Accessories

| | Type | Qty. | Order No. | Type | Qty. | Order No. |
|---|---|---|---|---|---|---|
| **Mounting plates and fastening screws** | | | | | | |
| Steel sheet, zinc plated | MP TBF 60/37 | 1 | 9502910000 | MP TBF 60/60 | 1 | 9502920000 |
| **External mounting lug, set of 4** | | | | | | |
| Polyamide | MF TBF | 1 | 0360800000 | MF TBF | 1 | 0360800000 |
| **Earthing stud** | | | | | | |
| M6, Brass | ES TBF M6 brass | 1 | 9502700000 | ES TBF M6 brass | 1 | 9502700000 |
| M6, Stainless steal | ES TBF M6 ss | 1 | 9505240000 | ES TBF M6 ss | 1 | 9505240000 |
| M10, Brass | ES TBF M10 brass | 1 | 9502710000 | ES TBF M10 brass | 1 | 9502710000 |
| M10, Stainless steal | ES TBF M10 ss | 1 | 9500870000 | ES TBF M10 ss | 1 | 9500870000 |
| **Expansion frame** | | | | | | |
| Polyamide | EF TBF 60/37 | 1 | 9503000000 | EF TBF 60/60 | 1 | 9503010000 |
| **Note** | If using an extension frame, the protection class (IP) is reduced. | | | If using an extension frame, the protection class (IP) is reduced. | | |

# MPC – Small polycarbonate enclosures

The polycarbonate enclosures of the MPC range are ideal for enclosing electrical, electro-mechanical and pneumatic devices as well as PCBs. The enclosures are used in situations with extreme mechanical and chemical conditions.

The characteristics of the enclosures are:
- Available in 17 sizes, with grey or transparent lids
- Lid fixing screws equipped with sealing holes
- Fixing holes outside the sealed area
- Thread for fitting to terminal rails, mounting plates and PCBs

Weidmüller can manufacture and supply this enclosure to match customer specifications and fitted with all necessary terminals and cable glands.

## Overview of enclosures

### Ordering data

| Description | Dimensions in mm | Grey lid | Transparent lid |
|---|---|---|---|
| MPC 07/12/07 | 75 x 125 x 75 | 9535170000 | 9535180000 |
| MPC 07/12/10 | 75 x 125 x 100 | 9535190000 | 9535200000 |
| MPC 07/12/12 | 75 x 125 x 120 | 9535210000 | 9535220000 |
| MPC 12/12/07 | 120 x 120 x 75 | 9535230000 | 9535240000 |
| MPC 12/12/10 | 120 x 120 x 100 | 9535250000 | 9535260000 |
| MPC 12/12/12 | 120 x 120 x 120 | 9535270000 | 9535280000 |
| MPC 12/17/07 | 120 x 175 x 75 | 9535290000 | 9535300000 |
| MPC 12/17/10 | 120 x 175 x 100 | 9535310000 | 9535320000 |
| MPC 12/17/12 | 120 x 175 x 120 | 9535330000 | 9535340000 |
| MPC 12/17/15 | 120 x 175 x 150 | 9535350000 | 9535360000 |
| MPC 17/17/07 | 175 x 175 x 75 | 9535370000 | 9535380000 |
| MPC 17/17/10 | 175 x 175 x 100 | 9535390000 | 9535400000 |
| MPC 17/17/12 | 175 x 175 x 120 | 9535410000 | |
| MPC 17/17/15 | 175 x 175 x 150 | 9535430000 | 9535440000 |
| MPC 17/25/10 | 175 x 250 x 100 | 9535450000 | |
| MPC 18/25/07 | 180 x 250 x 75 | 9535470000 | 9535480000 |
| MPC 18/25/15 | 180 x 250 x150 | 9535490000 | 9535500000 |
| Note | | | |

## Technical Overview

### Features

| |
|---|
| • High thermal stability thanks to the polycarbonate |
| • Extremely tough and impact resistant thanks to the high fibre-glass content. |
| • Good IP rating, due to use of polyurethane (PUR) gasket material |
| • Approved according to the latest international standards |

| | |
|---|---|
| **Note** | We deliver enclosures through our assembly service which are ready to be connected and suitable for every application. |

### Technical data

| | |
|---|---|
| Enclosure material | Polycarbonate |
| Cover | Grey or transparent |
| Surface finish | Grey, similar to RAL 7035 |
| IP protection class | IP 66, IP 67 |
| Installation mounting | Self-tapping screws |
| Enclosure mounting | 4 holes (4.5 mm diameter) or external mounting brackets (optional) |
| Lid fixing | 4 cross-head screws (polyamide) |
| Gasket material | Polyurethane foam |
| Temperature range | -50 °C...+130 °C |
| **Note** | |

| | MPC 07/12/07 | 75 mm | MPC 07/12/12 | 125 mm |
|---|---|---|---|---|
| | 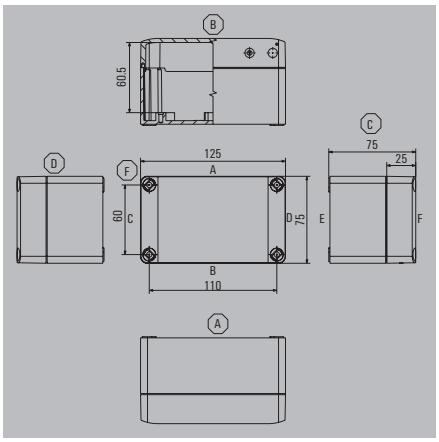 | | 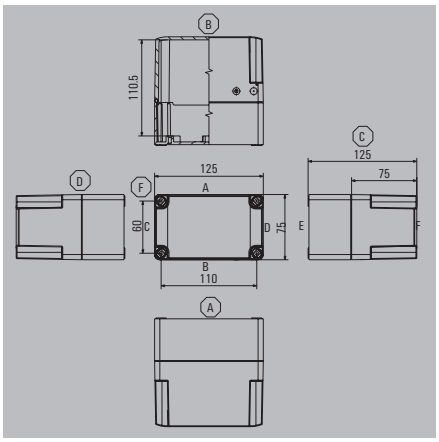 | |
| Height / Width / Depth | 125 / 75 / 75 mm | | 125 / 75 / 125 mm | |

## Technical data

| Assembly with terminal | vertical | horizontal | vertical | horizontal |
|---|---|---|---|---|
| 2.5 mm² | 1x13 | 1x13 | 1x13 | 1x13 |
| 4 mm² | 1x11 | 1x11 | 1x11 | 1x11 |
| 6 mm² | 1x8 | 1x8 | 1x8 | 1x8 |
| 10 mm² | 1x6 | 1x6 | 1x6 | 1x6 |
| 16 mm² | | | 1x5 | 1x1 |
| 35 mm² | | | 1x4 | 1x1 |
| **Number of cable entries** | **A / B** | **C / D** | **A / B** | **C / D** |
| M12 | 1 | 4 | 1 | 4 |
| M16 | 1 | 3 | 1 | 3 |
| M20 | 1 | 3 | 1 | 3 |
| M25 | | | | |
| M32 | | | | |
| M40 | | | | |
| M50 | | | | |
| M63 | | | | |
| M75 | | | | |
| **Note** | It is possible to mount the WDU terminal blocks on a TS 35. | | It is possible to mount the WDU terminal blocks on a TS 35. | |

## Ordering data

| | Type | Qty. | Order No. | Type | Qty. | Order No. |
|---|---|---|---|---|---|---|
| Enclosure with grey lid | MPC 07/12/07 7035 | 1 | 9535170000 | MPC 07/12/12 7035 | 1 | 9535210000 |
| Enclosure with transparent lid | MPC 07/12/07 trsp | 1 | 9535180000 | MPC 07/12/12 trsp | 1 | 9535220000 |
| **Note** | | | | | | |

## Accessories

| | Type | Qty. | Order No. | Type | Qty. | Order No. |
|---|---|---|---|---|---|---|
| **Mounting plate** | | | | | | |
| Steel sheet, zinc plated  | MP MPC 07/12 | 10 | 9535540000 | MP MPC 07/12 | 10 | 9535540000 |
| **External mounting lug, set of 4** | MF MPC | 1 | 9535600000 | MF MPC | 1 | 9535600000 |
| **Hinge, set of 2** | HG MPC | 1 | 9535590000 | HG MPC | 1 | 9535590000 |
| **Note** | | | | | | |

| | MPC 12/12/07 | 75 mm | MPC 12/17/07 | 75 mm |
|---|---|---|---|---|

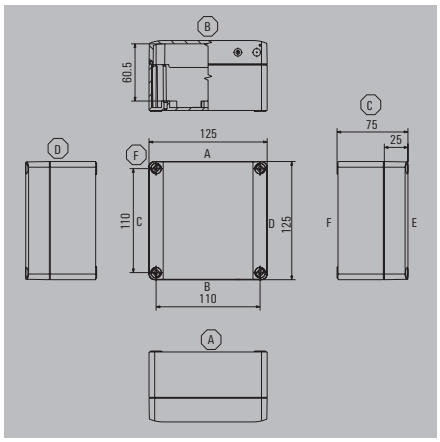


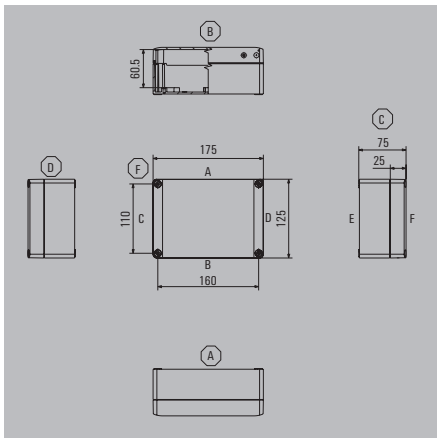


| | | |
|---|---|---|
| Height / Width / Depth | 125 / 125 / 75 mm | 175 / 125 / 75 mm |

## Technical data

| Assembly with terminal | vertical | horizontal | vertical | horizontal |
|---|---|---|---|---|
| 2.5 mm² | 1x13 | 1x13 | 1x22 | 1x22 |
| 4 mm² | 1x11 | 1x11 | 1x19 | 1x19 |
| 6 mm² | 1x8 | 1x8 | 1x14 | 1x14 |
| 10 mm² | 1x6 | 1x6 | 1x11 | 1x11 |
| 16 mm² | | | | |
| 35 mm² | | | | |
| **Number of cable entries** | **A / B** | **C / D** | **A / B** | **C / D** |
| M12 | 4 | 4 | 4 | 6 |
| M16 | 3 | 3 | 3 | 4 |
| M20 | 3 | | 3 | 4 |
| M25 | | | | |
| M32 | | | | |
| M40 | | | | |
| M50 | | | | |
| M63 | | | | |
| M75 | | | | |
| **Note** | It is possible to mount the WDU terminal blocks on a TS 35. | | It is possible to mount the WDU terminal blocks on a TS 35. | |

## Ordering data

| | Type | Qty. | Order No. | Type | Qty. | Order No. |
|---|---|---|---|---|---|---|
| Enclosure with grey lid | MPC 12/12/07 7035 | 1 | 9535230000 | MPC 12/17/07 7035 | 1 | 9535290000 |
| Enclosure with transparent lid | MPC 12/12/07 trsp | 1 | 9535240000 | MPC 12/17/07 trsp | 1 | 9535300000 |
| **Note** | | | | | | |

## Accessories

| | Type | Qty. | Order No. | Type | Qty. | Order No. |
|---|---|---|---|---|---|---|
| **Mounting plate** | | | | | | |
| Steel sheet, zinc plated  | MP MPC 12/12 | 10 | 9535550000 | MP MPC 12/17 | 10 | 9535560000 |
| **External mounting lug, set of 4** | | | | | | |
| | MF MPC | 1 | 9535600000 | MF MPC | 1 | 9535600000 |
| **Hinge, set of 2** | | | | | | |
| | HG MPC | 1 | 9535590000 | HG MPC | 1 | 9535590000 |
| **Note** | | | | | | |

## MPC - Polycarbonate enclosures

| | MPC 12/17/10 — 100 mm | MPC 12/17/12 — 125 mm |
|---|---|---|
| | 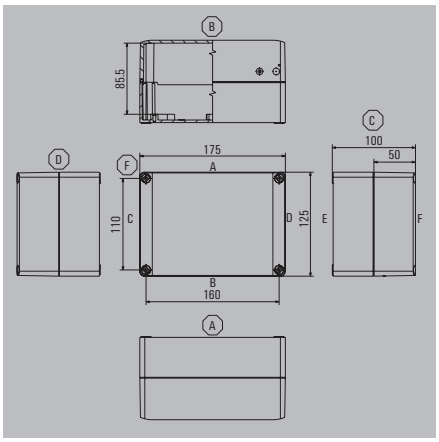 | 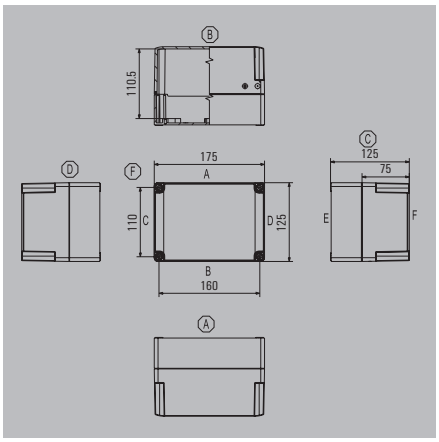 |
| Height / Width / Depth | 175 / 125 / 100 mm | 175 / 125 / 125 mm |

### Technical data

| Assembly with terminal | vertical | horizontal | vertical | horizontal |
|---|---|---|---|---|
| 2.5 mm² | 1x22 | 1x22 | 1x13 | 1x22 |
| 4 mm² | 1x19 | 1x19 | 1x11 | 1x19 |
| 6 mm² | 1x14 | 1x14 | 1x8 | 1x8 |
| 10 mm² | 1x11 | 1x11 | 1x6 | 1x11 |
| 16 mm² | 1x9 | 1x5 | 1x5 | 1x5 |
| 35 mm² | 1x7 | 1x4 | 1x4 | 1x4 |
| **Number of cable entries** | **A / B** | **C / D** | **A / B** | **C / D** |
| M12 | 4 | 6 | 4 | 6 |
| M16 | 3 | 4 | 3 | 4 |
| M20 | 3 | 4 | 3 | 4 |
| M25 | | | | |
| M32 | | | | |
| M40 | | | | |
| M50 | | | | |
| M63 | | | | |
| M75 | | | | |
| **Note** | It is possible to mount the WDU terminal blocks on a TS 35. | | It is possible to mount the WDU terminal blocks on a TS 35. | |

### Ordering data

| | Type | Qty. | Order No. | Type | Qty. | Order No. |
|---|---|---|---|---|---|---|
| Enclosure with grey lid | MPC 12/17/10 7035 | 1 | 9535310000 | MPC 12/17/12 7035 | 1 | 9535330000 |
| Enclosure with transparent lid | MPC 12/17/10 trsp | 1 | 9535320000 | MPC 12/17/12 trsp | 1 | 9535340000 |
| **Note** | | | | | | |

### Accessories

| | Type | Qty. | Order No. | Type | Qty. | Order No. |
|---|---|---|---|---|---|---|
| **Mounting plate** | | | | | | |
| Steel sheet, zinc plated  | MP MPC 12/17 | 10 | 9535560000 | MP MPC 12/17 | 10 | 9535560000 |
| **External mounting lug, set of 4** | | | | | | |
| | MF MPC | 1 | 9535600000 | MF MPC | 1 | 9535600000 |
| **Hinge, set of 2** | | | | | | |
| | HG MPC | 1 | 9535590000 | HG MPC | 1 | 9535590000 |
| **Note** | | | | | | |

## MPC 17/17/07 — 75 mm

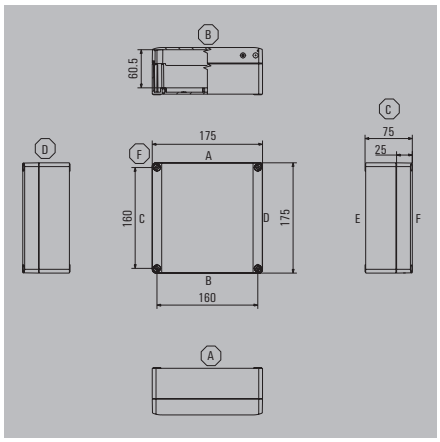


| | |
|---|---|
| Height / Width / Depth | 175 / 175 / 75 mm |

## Technical data

| Assembly with terminal | vertical | horizontal |
|---|---|---|
| 2.5 mm² | 1x22 | 1x22 |
| 4 mm² | 1x19 | 1x19 |
| 6 mm² | 1x14 | 1x14 |
| 10 mm² | 1x11 | 1x11 |
| 16 mm² | | |
| 35 mm² | | |

| Number of cable entries | A / B | C / D |
|---|---|---|
| M12 | 6 | 6 |
| M16 | 4 | 4 |
| M20 | 4 | |
| M25 | | |
| M32 | | |
| M40 | | |
| M50 | | |
| M63 | | |
| M75 | | |

| Note | It is possible to mount the WDU terminal blocks on a TS 35. |
|---|---|

## Ordering data

| | Type | Qty. | Order No. |
|---|---|---|---|
| Enclosure with grey lid | MPC 17/17/07 7035 | 1 | 9535370000 |
| Enclosure with transparent lid | MPC 17/17/07 trsp | 1 | 9535380000 |

Note

## Accessories

| Mounting plate | Type | Qty. | Order No. |
|---|---|---|---|
| Steel sheet, zinc plated | MP MPC 17/17 | 10 | 9535570000 |

| External mounting lug, set of 4 | | | |
|---|---|---|---|
| | MF MPC | 1 | 9535600000 |

| Hinge, set of 2 | | | |
|---|---|---|---|
| | HG MPC | 1 | 9535590000 |

Note

## MPC - Polycarbonate enclosures

| | MPC 17/17/15 — 150 mm | MPC 17/25/10 — 100 mm |
|---|---|---|
| | 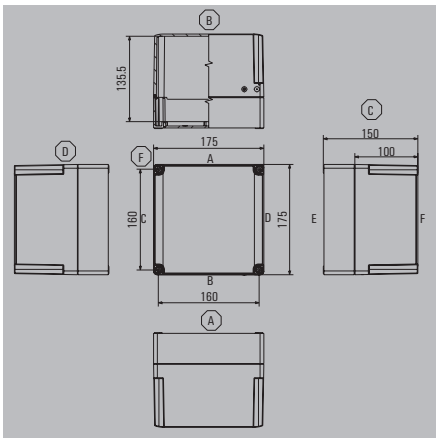 | 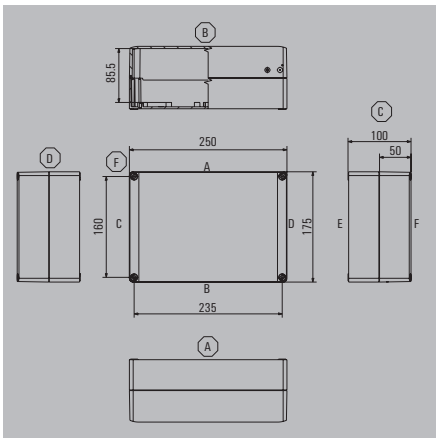 |
| Height / Width / Depth | 175 / 175 / 150 mm | 250 / 175 / 100 mm |

### Technical data

| Assembly with terminal | vertical | horizontal | vertical | horizontal |
|---|---|---|---|---|
| 2.5 mm² | 1x22 | 1x22 | 1x37 | 1x37 |
| 4 mm² | 1x19 | 1x19 | 1x31 | 1x31 |
| 6 mm² | 1x14 | 1x14 | 1x23 | 1x23 |
| 10 mm² | 1x11 | 1x11 | 1x19 | 1x19 |
| 16 mm² | 1x9 | 1x9 | 1x15 | 1x9 |
| 35 mm² | 1x7 | 1x7 | 1x11 | 1x7 |
| **Number of cable entries** | **A / B** | **C / D** | **A / B** | **C / D** |
| M12 | 6 | 6 | 6 | 9 |
| M16 | 4 | 4 | 4 | 7 |
| M20 | 4 | | 4 | 6 |
| M25 | | | | |
| M32 | | | | |
| M40 | | | | |
| M50 | | | | |
| M63 | | | | |
| M75 | | | | |
| **Note** | It is possible to mount the WDU terminal blocks on a TS 35. | | It is possible to mount the WDU terminal blocks on a TS 35. | |

### Ordering data

| | Type | Qty. | Order No. | Type | Qty. | Order No. |
|---|---|---|---|---|---|---|
| Enclosure with grey lid | MPC 17/17/15 7035 | 1 | 9535430000 | MPC 17/25/10 7035 | 1 | 9535470000 |
| Enclosure with transparent lid | MPC 17/17/15 trsp | 4 | 9535440000 | MPC 17/25/10 trsp | 1 | 9535480000 |
| **Note** | | | | | | |

### Accessories

| | Type | Qty. | Order No. | Type | Qty. | Order No. |
|---|---|---|---|---|---|---|
| **Mounting plate** | | | | | | |
| Steel sheet, zinc plated | MP MPC 17/17 | 10 | 9535570000 | MP MPC 17/25 | 1 | 9535580000 |
| **External mounting lug, set of 4** | MF MPC | 1 | 9535600000 | MF MPC | 1 | 9535600000 |
| **Hinge, set of 2** | HG MPC | 1 | 9535590000 | HG MPC | 1 | 9535590000 |
| **Note** | | | | | | |

# FPC – Medium-sized polycarbonate enclosures

The FPC enclosure range is the next generation of the MPC range. The enclosures have the same technical characteristics and are ideal for enclosing electrical, electro-mechanical and pneumatic devices and PCBs. The enclosures are used in situations where extreme mechanical and chemical conditions exist.

The characteristics of the enclosures are:
- Available in 6 sizes, with grey or transparent lids
- Lid fixing screws equipped with sealing holes
- Fixing holes outside the sealed area
- Thread for fitting to terminal rails, mounting plates and PCBs

Weidmüller can manufacture and supply this enclosure to match customer specifications and fitted with all necessary terminals and cable glands.

## Overview of enclosures

### Ordering data

| Description | Dimensions in mm | Grey lid | Transparent lid |
|---|---|---|---|
| FPC 20/20/13 | 200 x 200 x 130 | 9535690000 | 9535680000 |
| FPC 20/30/13 | 300 x 200 x 130 | 9535710000 | 9535700000 |
| FPC 20/40/13 | 400 x 200 x 130 | 9535730000 | 9535720000 |
| FPC 30/30/13 | 300 x 300 x 130 | 9535750000 | 9535740000 |
| FPC 30/40/13 | 400 x 300 x 130 | 9535770000 | 9535760000 |
| FPC 40/60/13 | 600 x 400 x 130 | 9535810000 | 9535820000 |
| Note | | | |

### Technical data

| | |
|---|---|
| Enclosure material | Polycarbonate |
| Cover | Grey or transparent |
| Surface finish | Grey, similar to RAL 7035 |
| IP protection class | IP 66, IP 67 |
| Installation mounting | Self-tapping screws |
| Enclosure mounting | 4 holes (7.5 mm diameter) or external mounting brackets (optional) |
| Lid fixing | 4 cross-head screws (polyamide) |
| Gasket material | Polyurethane foam |
| Temperature range | -50 °C...+130 °C |
| Note | |

| | FPC 20/20/13 | 132 mm | FPC 20/30/13 | 132 mm |
|---|---|---|---|---|
| | 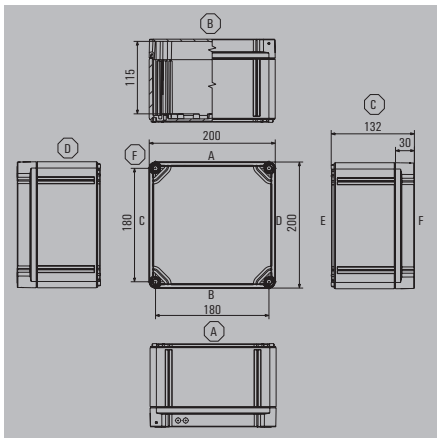 | | 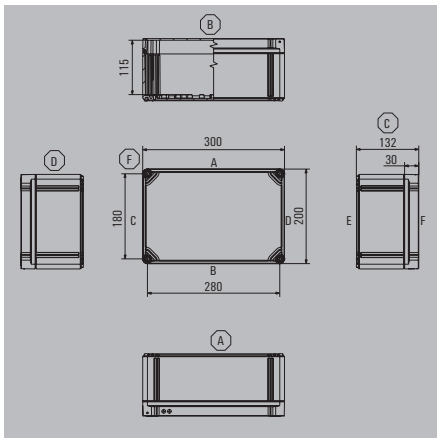 | |
| Height / Width / Depth | 200 / 200 / 132 mm | | 200 / 300 / 132 mm | |

## Technical data

| Assembly with terminal | vertical | horizontal | vertical | horizontal |
|---|---|---|---|---|
| 2.5 mm² | 1x17 | 1x17 | 2x20 | 1x40 |
| 4 mm² | 1x14 | 1x14 | 2x17 | 1x33 |
| 6 mm² | 1x10 | 1x10 | 2x13 | 2x13 |
| 10 mm² | 1x8 | 1x8 | 2x10 | 1x20 |
| 16 mm² | 1x7 | 1x7 | 2x8 | 1x17 |
| 35 mm² | 1x5 | 1x5 | 2x6 | 1x12 |
| **Number of cable entries** | **A / B** | **C / D** | **A / B** | **C / D** |
| M12 | 20 | 20 | 38 | 20 |
| M16 | 11 | 11 | 21 | 11 |
| M20 | 6 | 6 | 12 | 6 |
| M25 | 4 | 4 | 8 | 4 |
| M32 | 2 | 2 | 3 | 2 |
| M40 | 1 | 1 | 3 | 1 |
| M50 | 1 | 1 | 2 | 1 |
| M63 | 1 | 1 | 2 | 1 |
| M75 | | | | |
| **Note** | | | | |

## Ordering data

| | Type | Qty. | Order No. | Type | Qty. | Order No. |
|---|---|---|---|---|---|---|
| Enclosure with grey lid | FPC 20/20/13 7035 | 1 | 9535690000 | FPC 20/30/13 7035 | 1 | 9535710000 |
| Enclosure with transparent lid | FPC 20/20/13 trsp | 1 | 9535680000 | FPC 20/30/13 trsp | 1 | 9535700000 |
| **Note** | | | | | | |

## Accessories

| | Type | Qty. | Order No. | Type | Qty. | Order No. |
|---|---|---|---|---|---|---|
| **Mounting plate** | | | | | | |
| Steel sheet, zinc plated | MP FPC 20/20 | 1 | 9535920000 | MP FPC 20/30 | 1 | 9535930000 |
| **External mounting lug, set of 4** | MF FPC | 1 | 9536040000 | MF FPC | 1 | 9536040000 |
| **Hinge, set of 2** | HG FPC | 1 | 9535990000 | HG FPC | 1 | 9535990000 |
| **Note** | | | | | | |

## FPC - Polycarbonate enclosures

| | FPC 20/40/13 | 132 mm | FPC 30/30/13 | 132 mm |
|---|---|---|---|---|
| | 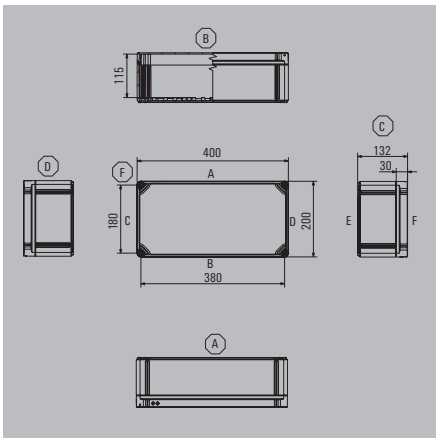 | | 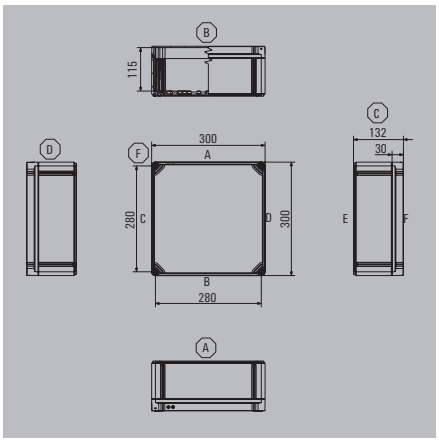 | |
| Height / Width / Depth | 200 / 400 / 132 mm | | 300 / 300 / 132 mm | |

### Technical data

| Assembly with terminal | vertical | horizontal | vertical | horizontal |
|---|---|---|---|---|
| 2.5 mm² | 3x20 | 1x59 | 2x40 | 1x40 |
| 4 mm² | 3x17 | 1x49 | 2x33 | 1x33 |
| 6 mm² | 3x13 | 3x13 | 2x25 | 2x25 |
| 10 mm² | 3x10 | 1x30 | 2x20 | 1x20 |
| 16 mm² | 3x8 | 1x25 | 2x17 | 1x17 |
| 35 mm² | 3x6 | 1x19 | 2x12 | 1x12 |
| **Number of cable entries** | **A / B** | **C / D** | **A / B** | **C / D** |
| M12 | 56 | 20 | 38 | 38 |
| M16 | 30 | 11 | 21 | 21 |
| M20 | 18 | 6 | 12 | 12 |
| M25 | 12 | 4 | 8 | 8 |
| M32 | 5 | 2 | 3 | 3 |
| M40 | 4 | 1 | 3 | 3 |
| M50 | 4 | 1 | 2 | 2 |
| M63 | 3 | 1 | 2 | 2 |
| M75 | | | | |
| **Note** | | | | |

### Ordering data

| | Type | Qty. | Order No. | Type | Qty. | Order No. |
|---|---|---|---|---|---|---|
| Enclosure with grey lid | FPC 20/40/13 7035 | 1 | 9535730000 | FPC 30/30/13 7035 | 1 | 9535750000 |
| Enclosure with transparent lid | FPC 20/40/13 trsp | 1 | 9535720000 | FPC 30/30/13 trsp | 1 | 9535740000 |
| **Note** | | | | | | |

### Accessories

| | Type | Qty. | Order No. | Type | Qty. | Order No. |
|---|---|---|---|---|---|---|
| **Mounting plate** | | | | | | |
| Steel sheet, zinc plated | MP FPC 20/40 | 1 | 9535940000 | MP FPC 30/30 | 1 | 9535950000 |
| **External mounting lug, set of 4** | MF FPC | 1 | 9536040000 | MF FPC | 1 | 9536040000 |
| **Hinge, set of 2** | HG FPC | 1 | 9535990000 | HG FPC | 1 | 9535990000 |
| **Note** | | | | | | |

| | FPC 30/40/13 | 132 mm | FPC 40/60/13 | 132 mm |
|---|---|---|---|---|

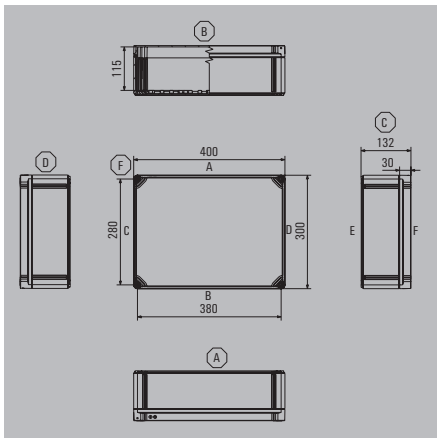


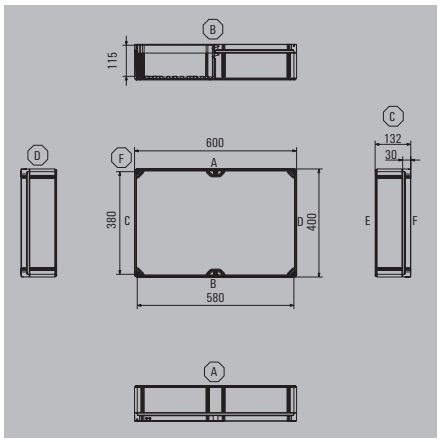


| Height / Width / Depth | 300 / 400 / 132 mm | 400 / 600 / 132 mm |
|---|---|---|

## Technical data

| Assembly with terminal | vertical | horizontal | vertical | horizontal |
|---|---|---|---|---|
| 2.5 mm² | 3x40 | 1x59 | 5x59 | 2x97 |
| 4 mm² | 3x33 | 1x49 | 5x49 | 2x81 |
| 6 mm² | 3x25 | 3x25 | 5x37 | 5x37 |
| 10 mm² | 3x20 | 1x30 | 5x30 | 2x49 |
| 16 mm² | 3x17 | 1x25 | 5x25 | 2x41 |
| 35 mm² | 3x12 | 1x19 | 5x19 | 2x31 |
| **Number of cable entries** | **A / B** | **C / D** | **A / B** | **C / D** |
| M12 | 56 | 38 | 76 | 56 |
| M16 | 30 | 21 | 42 | 30 |
| M20 | 18 | 12 | 24 | 18 |
| M25 | 12 | 8 | 16 | 12 |
| M32 | 5 | 3 | 6 | 5 |
| M40 | 4 | 3 | 6 | 4 |
| M50 | 4 | 2 | 4 | 4 |
| M63 | 3 | 2 | 4 | 3 |
| M75 | | | | |
| **Note** | | | | |

## Ordering data

| | Type | Qty. | Order No. | Type | Qty. | Order No. |
|---|---|---|---|---|---|---|
| Enclosure with grey lid | FPC 30/40/13 7035 | 1 | 9535770000 | FPC 40/60/13 7035 | 1 | 9535810000 |
| Enclosure with transparent lid | FPC 30/40/13 trsp | 1 | 9535760000 | FPC 40/60/13 trsp | 1 | 9535820000 |
| **Note** | | | | | | |

## Accessories

| | Type | Qty. | Order No. | Type | Qty. | Order No. |
|---|---|---|---|---|---|---|
| **Mounting plate** | | | | | | |
| Steel sheet, zinc plated | MP FPC 30/40 | 1 | 9535960000 | MP FPC 40/60 | 1 | 9535980000 |
| **External mounting lug, set of 4** | MF FPC | 1 | 9536040000 | MF FPC | 1 | 9536040000 |
| **Hinge, set of 2** | HG FPC | 1 | 9535990000 | HG FPC | 1 | 9535990000 |
| **Note** | | | | | | |

# Cable entries


| | | |
|---|---|---|
| **Cable entries** | Introduction | C.2 |
| | Standard cable glands – Plastic | C.6 |
| | Standard cable glands – Brass | C.9 |
| | EMC cable glands | C.15 |
| | Standard cable glands – Stainless steel | C.17 |
| | Klippon® Cable Glands | C.19 |
| | Accessories – Lock nuts | C.46 |
| | Accessories – Flat IP washer | C.51 |
| | Accessories – Earthing rings | C.55 |
| | Accessories – Shrouds | C.57 |
| | Accessories – Washers | C.59 |
| | Sealing plugs | C.60 |
| | Adaptors | C.67 |
| | Compensating elements | C.69 |

# Cable entries

Weidmüller offers a variety of add-on components for a multitude of applications; complementing its wide range of enclosure products.
In addition to cable glands in brass, plastic and stainless steel, we provide sealing plugs, pressure compensation elements, adaptors and matching accessories, including lock nuts, flat gasket seals and earthing rings.

As with the enclosures, the cable glands come in IP protective classes from IP 54 to IP 69K and can be used as required in industrial standard applications, EMC applications or indeed in explosive hazard areas. They have the appropriate approvals for use in these areas. Ex certified Klippon® cable glands also allow the connection of braided and shielded armour with or without a lead sheath, as well as single wire reinforcement and metal foil armoured cables and wires. They can be used in temperatures from -60 °C to +180 °C.

Depending on the connector range and the application area, the cable glands, sealing plugs, adaptors, pressure compensation elements and accessories are certified and manufactured in line with the following standards:

- EN 60423 (metric thread)
- EN 40430 (PG and NPT thread)
- EN 60079-0 (General ATEX regulations)
- EN 60079-1 (Ex d ATEX regulations)
- EN 60079-7 (Ex e ATEX regulations)
- EN 60079-11 (Ex i ATEX regulations)
- EN 50262 (strain relief)
- EN 60529 (IP protection degree)

The range of cable glands, sealing plugs and pressure compensation elements is available in metric (M) and highstrength (PG) threads in sizes from M 12 to M 75 and PG 7 to PG 48. When choosing glands and sealing plugs, please refer to the table for the sealing characteristics of the O-rings, flat gaskets and seal inserts. The O-ring or flat gasket is always used to seal the connecting thread of an enclosure, while the seal insert for the cable gland actually seals and clamps the connection cable.

You should always observe the maximum drill-hole diameter when installing a cable gland, sealing plug, adaptor or pressure compensation element (e.g. onto the gland plate of an enclosure). These must not exceed the following specified maximum values / tolerances so that the protection degree of the whole enclosure can be guaranteed.

## Through-hole information

| M thread | Through-hole, in mm |
|---|---|
| M 12 | 12.2 |
| M 16 | 16.2 |
| M 20 | 20.2 |
| M 25 | 25.2 |
| M 32 | 32.2 |
| M 40 | 40.2 |
| M 50 | 50.2 |
| M 63 | 63.2 |
| M 75 | 75.2 |
| **PG thread** | **Through-hole, in mm** |
| PG 7 | 12.4 |
| PG 9 | 15.1 |
| PG 11 | 18.5 |
| PG 13.5 | 20.4 |
| PG 16 | 22.5 |
| PG 21 | 28.3 |
| PG 29 | 37.4 |
| PG 36 | 47.2 |
| PG 42 | 54.2 |
| PG 48 | 59.5 |

## Overview of sealing materials for O-rings, flat gaskets as well as seal inserts

| Abbreviation | Material | Trade name | Temperature range | Chemical resistance | Fire resistant | Shore | Free from halogens | UV resistance |
|---|---|---|---|---|---|---|---|---|
| **TPE** | Thermo-plastic elastomer | Santroprene | -40 °C...+130 °C | Hydrocarbons, oils, acids | UL94, HB | 64 | Yes | very good |
| **CR** | Chloroprene rubber | Neoprene | -40 °C...+130 °C | Mineral oils, greases, fuels | very good | 40 - 90 | No | very good |
| **NBR** | Nitrile rubber | Perbunan, Nitrile | -40 °C...+130 °C | Hydrocarbons, oils, acids, aliphatic solvents, greases, fuels | weak | 40 - 90 | No | good |
| **EPDM** | Ethylene-propylene-diene rubber | Keltan | -50 °C...+130 °C | Weather-, grease-, mineral oil-, chlorine- ,and ozone resistant, hydrocarbons | weak | 20 - 90 | | very good |
| **FPM** | Fluoro-rubber | Viton | -25 °C...+200 °C | ozone, oxygen, mineral oils, synthetic hydraulic fluids, fuels, aromatics, many organic solvents and chemicals | weak | 65 - 95 | | good |

## Abbreviations – technical data

| | |
|---|---|
| A, L | Length in mm |
| L1 | Length of thread in mm |
| D | Diameter in mm |
| S | Thickness in mm |
| GWDR | Threaded sealing ring or IP washer in mm |
| S1,S2 | Depth in mm |
| SW | Distance across flats in mm |
| KB | Clamping range in mm |
| Thread | External thread |
| SUHB | Shroud |
| DR | Body torque in Nm |
| MODR | Mounting torque in Nm |
| DR HM | Cap nut torque in Nm |
| Qty. | Packing unit in pieces |

## Product designation

| | |
|---|---|
| VG | Cable gland |
| VP | Sealing plugs |
| KDSU | Klippon® Double Seal Universal |
| KDSW | Klippon® Double Seal for SWA |
| KDSX | Klippon® Double Seal for SWB/STA |
| KSG | Klippon® Standard Gland |
| KUB | Klippon® Universal Barrier |
| KSPA | Klippon® Stopping Plug Type A |
| KSPM | Klippon® Stopping Plug Mushroom |
| KSWN | Klippon® Sealing Washer Nylon |
| KSWF | Klippon® Sealing Washer Red Fibre |
| KSP | Klippon® Shroud PVC/Silicone |
| SKMU | Hexagon nut |
| DAE | Pressure compensation element |
| BD | Breather drain (compensation element) |
| EWS | Drain plug |
| SZS | Serrated Star Washers |
| ZE | Strain relief |
| EMV | Electromagnetic compatibility |
| SKS | Spiral kink protection |
| GWDR | Threaded sealing ring or IP washer |
| ZR | Onion ring system (removable seal incisions system) |

# Glands and accessories

The tables below provide an overview of the Weidmüller cable glands and the recommended accessories.

## Standard glands

| Material/Type | | Approvals | | | | | Thread sealing rings | | | Locknuts | | | |
|---|---|---|---|---|---|---|---|---|---|---|---|---|---|
| | | IP class of protection | | Ex | EMC | Armouring | CSM | CR | O-Ring | grey | black | brass | MS EMC |
| | | without seal | with seal | | | | GWDR PO | GWDR...NR | | SKMU...K GR | SKMU...K SW | SKMU...MS | SKMU EMV... |
| **Plastic** | | | | | | | | | | | | | |
| | VG ... K67 | IP 67 | | | | | | | | • | | | |
| | VG ... K68 | IP 68 / 5 bar | | | | | | | | • | | | |
| | VG ... K68 SKS | IP 68 / 5 bar | | | | | | | | • | | | |
| **Nickel-plated brass** | | | | | | | | | | | | | |
| | VG ... MS54 | IP 54 | IP 65 | | | | optional | | | | | • | |
| | VG ... MS68 | | IP 68 / 5 bar, IP 69k | | | | | | included | | | • | |
| | VG ... MS54-ZE | IP 54 | | | | | | | | | | • | |
| | VG...MS54 ZE BS | IP 54 | | | | | | | | | | • | |
| | VG...MS54 ZR | IP 54 | | | | | | | | | | • | |
| | VG ... EMV | | IP 68 / 10 bar | | • | | | | included | | | | • |
| | VG ... 1/EMV | | IP 68 / 5 bar, IP 69k | | • | | | | included | | | | • |
| **Stainless steel** | | | | | | | | | | | | | |
| | VG...SS68 | | IP 68 / 5 bar, IP 69k | | | | | | included | | | • | |

## Cable glands Ex

| Material/Type | | Approvals | | | | | Thread sealing rings | | | Locknuts | | | |
|---|---|---|---|---|---|---|---|---|---|---|---|---|---|
| | | IP class of protection | | Ex | EMC | Armouring | CSM | CR | O-Ring | grey | black | brass | MS EMC |
| | | without seal | with seal | | | | GWDR PO | GWDR...NR | | SKMU...K GR | SKMU...K SW | SKMU...MS | SKMU EMV... |
| **Nickel-plated brass, Ex** | | | | | | | | | | | | | |
| | KDSU...BN/BS O NI | | IP 68 / 2.5 bar | Exe/d | | • | | | included | | | • | |
| | KUB...BS O NI | | IP 66, IP 68 / 10 bar | Exe/d | | • | | | included | | | • | |
| | KDSW...BN/BS O/L NI | IP 54 | IP 54, IP 66, IP 68 / 2.5 bar | Exe/d | | • | optional | | | | | • | |
| | KDSX...BS O NI | IP 54 | IP 54, IP 66, IP 68 / 2.5 bar | Exe/d | | • | optional | | | | | • | |
| | KSG...BN/BS O NI | | IP 66, IP 68 / 2.5 bar | Exe/d | | | | | included | | | • | |
| **Brass Ex** | | | | | | | | | | | | | |
| | KDSU...BN/BS O SC | | IP 68 / 2.5 bar | Exe/d | | • | | | included | | | • | |
| | KUB...BS O SC | | IP 66, IP 68 / 10 bar | Exe/d | | • | | | included | | | • | |
| | KDSW...BN/BS O/L SC | IP 54 | IP 54, IP 66, IP 68 / 2.5 bar | Exe/d | | • | optional | | | | | • | |
| | KDSX...BS O SC | IP 54 | IP 54, IP 66, IP 68 / 2.5 bar | Exe/d | | • | optional | | | | | • | |
| | KSG...BN/BS O SC | | IP 66, IP 68 / 2.5 bar | Exe/d | | | | | included | | | • | |
| | Ex - Stainless steel glands on request | | | | | | | | | | | | |

## Adaptor

| Material/Type | | Approvals | | Thread sealing rings | | | Locknuts | | | |
|---|---|---|---|---|---|---|---|---|---|---|
| | | IP class of protection with seal | Ex | CSM GWDR PO | CR GWDR...NR | O-Ring | grey SKMU...K GR | black SKMU...K SW | brass SKMU...MS | MS EMC SKMU EMV... |
| **Plastic** | | | | | | | | | | |
| | DAE M12 PA | IP 66, IP 68, IP 69K | | | | included | | | | |
| | DAE M12 PA long | IP 66, IP 68, IP 69K | | | | included | | • | | |
| **Plastic Ex** | | | | | | | | | | |
| | EWS | IP 54 | • | • | | | | | | |
| **Stainless steel** | | | | | | | | | | |
| | DAE M12 SS | IP 66, IP 68, IP 69K | | | | included | | | • | • |
| **Stainless steel Ex** | | | | | | | | | | |
| | BD 1 ss | IP 66 | • | | | included | | | | |
| **Brass Ex** | | | | | | | | | | |
| | BD 1 brass | IP 66 | • | | | included | | | | |
| **Brass Ex** | | | | | | | | | | |
| | KLIPPON BDX ... B | IP 66 | • | | | included | | | | |
| **Stainless steel Ex** | | | | | | | | | | |
| | KLIPPON BDX ... S | IP 66 | • | | | included | | | | |

## Stopping plugs

| Material/Type | | Approvals IP class of protection without seal | Approvals IP class of protection with seal | Ex | Thread sealing rings CSM GWDR PO | Thread sealing rings CR GWDR...NR | Thread sealing rings O-Ring | Locknuts grey SKMU...K GR | Locknuts black SKMU...K SW | Locknuts brass SKMU...MS | Locknuts MS EMC SKMU EMV... |
|---|---|---|---|---|---|---|---|---|---|---|---|
| **Plastic** | | | | | | | | | | | |
| | VP ... K54 | IP 54 | IP 65 | | | | | • | | | |
| **Nickel-plated brass** | | | | | | | | | | | |
| | VP ... MS65 | | IP 68 | | | | included | | | • | |
| **Stainless steel** | | | | | | | | | | | |
| | KSPM...SSC | | IP 66, IP 68 | Exe/d | | | included | | | • | |
| **Plastic Ex** | | | | | | | | | | | |
| | VP...Ex SW | IP 66 | IP 66, IP 68 | Exe | | optional | | | • | | |
| | KSPM...PL | | IP 66, IP 68 | Exe | | | Nitrile | | • | | |
| **Nickel-plated brass, Ex** | | | | | | | | | | | |
| | VP...Ex MS | | IP 68 | Exe/d | | | included | | | • | |
| | KSPA...BNI | IP 54 | | Ex d | | | | | | • | |
| **Brass Ex** | | | | | | | | | | | |
| | KSPM...BSC | | IP 66, IP 68 | Exe/d | | | included | | | • | |

## Cable glands - Plastic - IP 67

Inexpensive cable gland for industrial applications, without approvals.

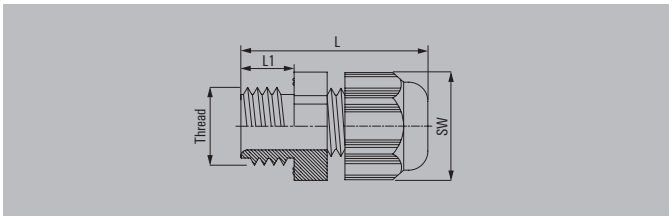


## Technical data

| | |
|---|---|
| Material / Colour | Polyamide 6 / RAL 7035 |
| Seal insert | CR |
| Temperature range | -20 °C...80 °C |
| Protection degree | IP 67 |
| Flammability rating | V-2 |

| | |
|---|---|
| **Note** | Version with moulded sealing lip<br>Length L varies depending on the cable diameter used |

## Ordering data

| Typ | Thread | KB | L/L1 | SW | TRQ CN min. / max. | TRQ BO min. / max. | Qty. | Order No. |
|---|---|---|---|---|---|---|---|---|
| **metric** | | | | | | | | |
| VG M12-K67 | M 12 / 1.5 | 3-6.5 | 23.9 / 8 | 15 | 1.50 / 2.50 | 1.00 / 3.00 | 100 | **1909660000** |
| VG M16-K67 | M 16 / 1.5 | 4-8 | 27.7 / 8 | 19 | 2.00 / 3.00 | 1.00 / 4.00 | 50 | **1909670000** |
| VG M16-K67 | M 16 / 1.5 | 5-10 | 29 / 10 | 22 | 2.00 / 3.00 | 1.00 / 4.00 | 50 | **1909680000** |
| VG M20-K67 | M 20 / 1.5 | 6-12 | 29.2 / 10 | 24 | 4.50 / 5.50 | 2.00 / 5.00 | 50 | **1909690000** |
| VG M20-K67 | M 20 / 1.5 | 10-14 | 32.8 / 10 | 27 | 5.00 / 6.00 | 2.00 / 5.00 | 50 | **1909700000** |
| VG M25-K67 | M 25 / 1.5 | 13-18 | 37.9 / 8 | 29 | 7.00 / 9.00 | 2.00 / 5.00 | 25 | **1909710000** |
| VG M32-K67 | M 32 / 1.5 | 18-25 | 40.7 / 10 | 36 | 8.00 / 10.00 | 3.00 / 7.00 | 20 | **1909720000** |
| VG M40-K67 | M 40 / 1.5 | 22-32 | 51.3 / 10 | 46 | 16.00 / 19.00 | 7.00 / 12.00 | 10 | **1909730000** |
| VG M50-K67 | M 50 / 1.5 | 30-38 | 53.5 / 18 | 60 | 20.00 / 24.00 | 9.50 / 15.50 | 10 | **1909740000** |
| VG M63-K67 | M 63 / 1.5 | 34-44 | 55 / 18 | 65 | 20.50 / 25.50 | 12.50 / 18.50 | 10 | **1909750000** |
| **PG** | | | | | | | | |
| VG PG7-K67 | PG 7 | 3-6.5 | 23.9 / 8 | 15 | 1.50 / 2.50 | 1.20 / 1.80 | 100 | **1909760000** |
| VG PG9-K67 | PG 9 | 4-8 | 27.7 / 8 | 19 | 2.00 / 3.00 | 1.20 / 1.80 | 50 | **1909770000** |
| VG PG11-K67 | PG 11 | 5-10 | 29 / 8 | 22 | 2.00 / 3.00 | 1.50 / 2.50 | 50 | **1909780000** |
| VG PG13.5-K67 | PG 13.5 | 6-12 | 29.2 / 9 | 24 | 4.50 / 5.50 | 2.50 / 3.50 | 50 | **1909790000** |
| VG PG16-K67 | PG 16 | 10-14 | 32.8 / 10 | 27 | 5.00 / 6.00 | 2.50 / 4.50 | 50 | **1909800000** |
| VG PG21-K67 | PG 21 | 13-18 | 37.9 / 11 | 33 | 5.00 / 6.00 | 7.00 / 9.00 | 25 | **1909810000** |
| VG PG29-K67 | PG 29 | 18-25 | 40.7 / 11 | 42 | 7.00 / 8.00 | 7.50 / 10.50 | 20 | **1909820000** |
| VG PG36-K67 | PG 36 | 22-32 | 51.3 / 13 | 53 | 14.50 / 15.30 | 9.50 / 12.50 | 10 | **1909830000** |
| VG PG42-K67 | PG 42 | 30-38 | 53.5 / 13 | 60 | 17.00 / 19.00 | 12.00 / 16.00 | 10 | **1909840000** |
| VG PG48-K67 | PG 48 | 34-44 | 55 / 14 | 65 | 19.00 / 21.00 | 12.00 / 16.00 | 10 | **1909850000** |
| **Note** | Integrated strain relief, halogen-free without sealing ring. | | | | | | | |

## Cable glands - Plastic - IP 68

Plastic cable gland with integrated strain relief for industrial applications requiring IP 68 protection.

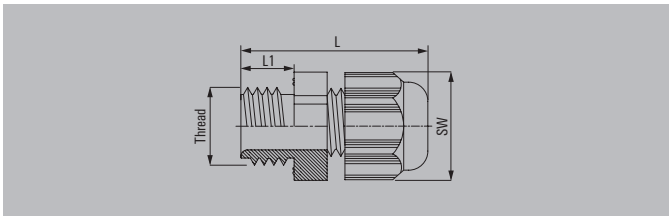


## Technical data

| | |
|---|---|
| Material / Colour | Polyamide 6 / RAL 7035 |
| Seal insert | CR |
| Temperature range | -30 °C...80 °C |
| Protection degree | IP 68 - 5 bar (30 min.) |
| Flammability rating | V-2 |

| | |
|---|---|
| **Note** | Version with moulded sealing lip<br>Length L varies depending on the cable diameter used |

## Ordering data

| Typ | Thread | KB | L/L1 | SW | TRQ CN min. / max. | TRQ BO min. / max. | Qty. | Order No. |
|---|---|---|---|---|---|---|---|---|
| **metric** | | | | | | | | |
| VG M12-1/K68 | M 12 / 1.5 | 3-6.5 | 32.4 / 8 | 15 | 1.50 / 2.50 | 1.00 / 3.00 | 100 | **1772280000** |
| VG M16 - K 68 | M 16 / 1.5 | 5-10 | 39.7 / 10 | 22 | 2.00 / 3.00 | 1.00 / 4.00 | 50 | **1772290000** |
| VG M16-1/K68 | M 16 / 1.5 | 4-8 | 35.7 / 8 | 19 | 2.00 / 3.00 | 1.00 / 4.00 | 50 | **1909860000** |
| VG M20-1/K68 | M 20 / 1.5 | 6-12 | 41.2 / 10 | 24 | 4.50 / 5.50 | 2.00 / 5.00 | 50 | **1772300000** |
| VG M25 - K 68 | M 25 / 1.5 | 13-18 | 48.2 / 10 | 33 | 7.00 / 9.00 | 2.00 / 5.00 | 25 | **1772310000** |
| VG M25-1/K68 | M 25 / 1.5 | 11-17 | 43.2 / 8 | 29 | 7.00 / 9.00 | 2.00 / 5.00 | 25 | **1909870000** |
| VG M32 - K 68 | M 32 / 1.5 | 18-25 | 50.8 / 18 | 42 | 8.00 / 10.00 | 3.00 / 7.00 | 20 | **1772320000** |
| VG M32-1/K68 | M 32 / 1.5 | 15-21 | 50.7 / 10 | 36 | 8.00 / 10.00 | 3.00 / 7.00 | 20 | **1909880000** |
| VG M40 - K 68 | M 40 / 1.5 | 22-32 | 69.9 / 18 | 53 | 16.00 / 19.00 | 7.00 / 12.00 | 10 | **1772330000** |
| VG M40-1/K68 | M 40 / 1.5 | 19-28 | 55.2 / 10 | 46 | 16.00 / 19.00 | 7.00 / 12.00 | 10 | **1909890000** |
| VG M50 - K 68 | M 50 / 1.5 | 30-38 | 71.7 / 18 | 60 | 20.00 / 24.00 | 9.50 / 15.50 | 10 | **1772340000** |
| VG M63-1/K68 | M 63 / 1.5 | 34-44 | 72.9 / 18 | 65 | 20.50 / 25.50 | 12.50 / 18.50 | 10 | **1772350000** |
| **PG** | | | | | | | | |
| VG 7-K68 | PG 7 | 3-6.5 | 30.5 / 8 | 15 | 1.50 / 2.50 | 1.20 / 1.80 | 100 | **1568970000** |
| VG 9-K68 | PG 9 | 4-8 | 34 / 8 | 19 | 2.00 / 3.00 | 1.20 / 1.80 | 50 | **1568980000** |
| VG 11-K68 | PG 11 | 5-10 | 37 / 8 | 22 | 2.00 / 3.00 | 1.50 / 2.50 | 50 | **1568990000** |
| VG 13.5-K68 | PG 13.5 | 6-12 | 39 / 9 | 24 | 4.50 / 5.50 | 2.50 / 3.50 | 50 | **1569000000** |
| VG 16-K68 | PG 16 | 10-14 | 42.5 / 10 | 27 | 5.00 / 6.00 | 2.50 / 4.50 | 50 | **1569010000** |
| VG 21-K68 | PG 21 | 13-18 | 48 / 11 | 33 | 5.00 / 6.00 | 7.00 / 9.00 | 25 | **1569020000** |
| VG 29-K68 | PG 29 | 18-25 | 53 / 11 | 42 | 7.00 / 8.00 | 7.50 / 10.50 | 20 | **1569030000** |
| VG 36-K68 | PG 36 | 22-32 | 65 / 13 | 53 | 14.50 / 15.50 | 9.50 / 12.50 | 10 | **1569040000** |
| VG 42-K68 | PG 42 | 30-38 | 68 / 13 | 60 | 17.00 / 19.00 | 12.00 / 16.00 | 10 | **1569050000** |
| VG 48-K68 | PG 48 | 34-44 | 69 / 14 | 65 | 19.00 / 21.00 | 12.00 / 16.00 | 10 | **1718770000** |
| **Note** | Long-thread version on request, halogen-free without sealing ring | | | | | | | |

## Cable glands - Plastic - SKS

Plastic cable gland with spiral bending protection specially suited for flexible connections.

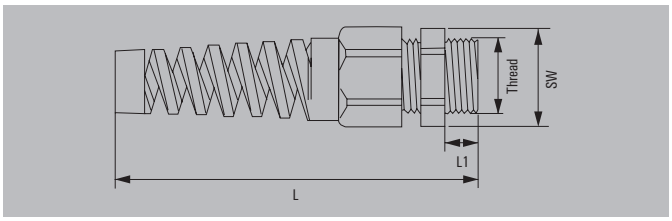


## Technical data

| | |
|---|---|
| Material / Colour | Polyamide 6 / RAL 7035 |
| Seal insert | CR |
| Temperature range | -30 °C...80 °C |
| Protection degree | IP 68 - 5 bar (30 min.) |
| Flammability rating | V-2 |

| | |
|---|---|
| **Note** | Version with moulded sealing lip<br>Length L varies depending on the cable diameter used |

## Ordering data

| Typ | Thread | KB | L/L1 | SW | TRQ CN min. / max. | TRQ BO min. / max. | Qty. | Order No. |
|---|---|---|---|---|---|---|---|---|
| **metric** | | | | | | | | |
| VGM12-K68 SKS | M 12 / 1.5 | 3-6.5 | 65 / 8 | 15 | 1.50 / 2.50 | 1.50 / 2.50 | 100 | **1776700000** |
| VGM16-K68 SKS | M 16 / 1.5 | 5-10 | 90 / 10 | 22 | 2.00 / 3.00 | 2.00 / 3.00 | 50 | **1776710000** |
| VGM20-K68 SKS | M 20 / 1.5 | 6-12 | 106 / 10 | 24 | 4.50 / 5.50 | 2.00 / 5.00 | 50 | **1778860000** |
| VGM20-K68 SKS | M 20 / 1.5 | 10-14 | 116 / 10 | 27 | 5.00 / 6.00 | 2.00 / 5.00 | 50 | **1776720000** |
| VGM25-K68 SKS | M 25 / 1.5 | 13-18 | 129 / 10 | 33 | 7.00 / 9.00 | 2.00 / 5.00 | 25 | **1776730000** |
| **PG** | | | | | | | | |
| VG 9-K68 SKS | PG 9 | 4-8 | 79 / 8 | 19 | 2.00 / 3.00 | 1.50 / 2.50 | 50 | **1720480000** |
| VG 11-K68 SKS | PG 11 | 5-10 | 89 / 8 | 22 | 2.00 / 3.00 | 1.50 / 2.50 | 100 | **1720490000** |
| VG 13.5-K68 SKS | PG 13.5 | 6-12 | 105 / 9 | 24 | 4.50 / 5.50 | 2.50 / 3.50 | 50 | **1720500000** |
| VG 16-K68 SKS | PG 16 | 10-14 | 117 / 10 | 27 | 5.00 / 6.00 | 2.50 / 4.50 | 25 | **1720510000** |
| VG 21-K68 SKS | PG 21 | 13-18 | 130 / 11 | 33 | 5.00 / 6.00 | 7.00 / 9.00 | 20 | **1720520000** |
| **Note** | VDE for metric variants, halogen free, without sealing ring | | | | | | | |

## Cable glands - Brass - IP 54

Standard brass cable gland for industrial applications that require IP 54 protection.

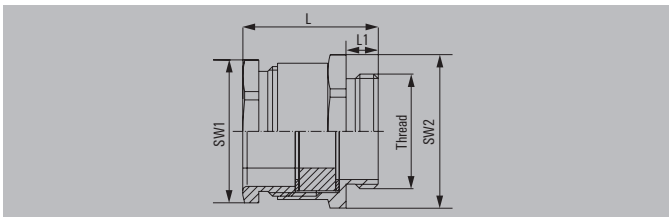


## Technical data

| | |
|---|---|
| Material | Brass, nickel-plated |
| Seal insert | NBR |
| Temperature range | -20 °C...60 °C |
| Protection degree | IP 54 |

| | |
|---|---|
| **Note** | Optional sealing ring<br>Length „L" varies depending on the cable diameter used. |

## Ordering data

| Typ | Thread | KB | L/L1 | SW1/SW2 | TRQ CN min. / max. | TRQ BO min. / max. | Qty. | Order No. |
|---|---|---|---|---|---|---|---|---|
| **metric** | | | | | | | | |
| VGM12-MS54 | M 12 / 1.5 | 5-7 | 21.5 / 5 | 13 / 14 | 5.30 / 5.30 | 8.00 / 8.00 | 100 | **1778410000** |
| VGM12-MS54 | M 12 / 1.5 | 6-8 | 22 / 6 | 15 / 17 | 5.30 / 5.30 | 8.00 / 8.00 | 100 | **1778400000** |
| VGM16-MS54 | M 16 / 1.5 | 8-10 | 26 / 5 | 18 / 20 | 6.70 / 6.70 | 10.00 / 10.00 | 100 | **1778390000** |
| VGM20-MS54 | M 20 / 1.5 | 8-10 | 26.5 / 6 | 18 / 22 | 8.00 / 8.00 | 12.00 / 12.00 | 50 | **1778380000** |
| VGM20-MS54 | M 20 / 1.5 | 10-12 | 26.5 / 6.5 | 20 / 22 | 8.00 / 8.00 | 12.00 / 12.00 | 50 | **1778370000** |
| VGM25-MS54 | M 25 / 1.5 | 12-14 | 27.5 / 7 | 22 / 27 | 8.00 / 8.00 | 12.00 / 12.00 | 50 | **1778360000** |
| VGM25-MS54 | M 25 / 1.5 | 15-17 | 29.5 / 7 | 28 / 30 | 8.00 / 8.00 | 12.00 / 12.00 | 50 | **1778350000** |
| VGM32-MS54 | M 32 / 1.5 | 24-26 | 33 / 8 | 38 / 40 | 12.00 / 12.00 | 18.00 / 18.00 | 25 | **1778340000** |
| VGM40-MS54 | M 40 / 1.5 | 33-35 | 33 / 9 | 37 / 43 | 12.00 / 12.00 | 18.00 / 18.00 | 25 | **1778330000** |
| VGM50-MS54 | M 50 / 1.5 | 31-33 | 39 / 9 | 47 / 55 | 13.30 / 13.30 | 20.00 / 20.00 | 10 | **1778320000** |
| VGM50-MS54 | M 50 / 1.5 | 39-41 | 43 / 10 | 54 / 57 | 13.30 / 13.30 | 20.00 / 20.00 | 5 | **1778310000** |
| VGM63-MS54 | M 63 / 1.5 | 45-47 | 45 / 10 | 60 / 68 | 13.30 / 13.30 | 20.00 / 20.00 | 5 | **1778300000** |
| **PG** | | | | | | | | |
| VG 7-MS54 | PG 7 | 5-7 | 20.5 / 5 | 13 / 14 | 4.20 / 4.20 | 6.25 / 6.25 | 100 | **0521500000** |
| VG 9-MS54 | PG 9 | 6-8 | 22 / 6 | 15 / 17 | 4.20 / 4.20 | 6.25 / 6.25 | 100 | **0261500000** |
| VG 11-MS54 | PG 11 | 8-10 | 26 / 6 | 18 / 20 | 4.20 / 4.20 | 6.25 / 6.25 | 50 | **0260700000** |
| VG 13.5-MS54 | PG 13.5 | 10-12 | 26 / 6.5 | 20 / 22 | 4.20 / 4.20 | 6.25 / 6.25 | 50 | **0260800000** |
| VG 16-MS54 | PG 16 | 12-14 | 27 / 6.5 | 22 / 24 | 5.00 / 5.00 | 7.50 / 7.50 | 50 | **0261400000** |
| VG 21-MS54 | PG 21 | 15-17 | 29.5 / 7 | 28 / 30 | 6.70 / 6.70 | 10.00 / 10.00 | 50 | **0260900000** |
| VG 29-MS54 | PG 29 | 24-26 | 33 / 8 | 37 / 40 | 6.70 / 6.70 | 10.00 / 10.00 | 25 | **0261000000** |
| VG 36-MS54 | PG 36 | 33-35 | 39 / 9 | 47 / 50 | 6.70 / 6.70 | 10.00 / 10.00 | 20 | **0497600000** |
| VG 42-MS54 | PG 42 | 39-41 | 44 / 10 | 54 / 57 | 6.70 / 6.70 | 10.00 / 10.00 | 10 | **0497700000** |
| VG 48-MS54 | PG 48 | 45-47 | 45 / 10 | 60 / 64 | 6.70 / 6.70 | 10.00 / 10.00 | 5 | **1718780000** |
| **Note** | | Further versions on request | | | | | | |

## Cable glands - Brass - ZR

Brass cable gland with incision seal for standard industrial applications. The seal insert which is used contains several removable or separable inlets. This enables cables with a diameter of 4 mm to 41 mm to be connected.

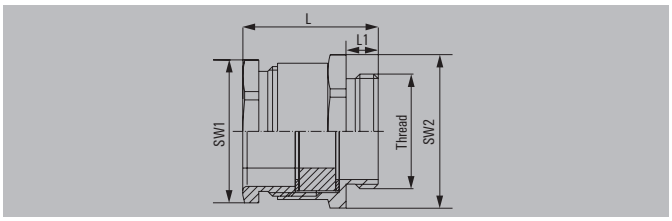


## Technical data

| | |
|---|---|
| Material | Brass, nickel-plated |
| Seal insert | NBR |
| Temperature range | -20 °C...80 °C |
| Protection degree | IP 54 |

**Note**

## Ordering data

| Typ | Thread | KB | L/L1 | SW1/SW2 | TRQ CN, min. | TRQ BO, min. | D1 | D2 | D3 | D4 | Qty. | Order No. |
|---|---|---|---|---|---|---|---|---|---|---|---|---|
| **metric** | | | | | | | | | | | | |
| VG M20-MS54 | M 20 / 1.5 | 4-13 | 26.5 / 6.5 | 22 / 24 | 3.05 | 6.25 | 4 | 7 | 10 | 13 | 50 | **1009560000** |
| VG M25-MS54 | M 25 / 1.5 | 8.5-18 | 27.5 / 7 | 28 / 30 | 3.66 | 7.50 | 8.5 | 11.5 | 14.5 | 18 | 25 | **1009570000** |
| VG M32-MS54 | M 32 / 1.5 | 16-26 | 33 / 8 | 37 / 40 | 4.88 | 10.00 | 16 | 19 | 22 | 25 | 25 | **1009580000** |
| VG M40-MS54 | M 40 / 1.5 | 23-30 | 33 / 33 | 47 / 50 | 4.88 | 10.00 | 23 | 26 | 29 | 32 | 10 | **1009590000** |
| VG M50-MS54 | M 50 / 1.5 | 32-40 | 39 / 39 | 54 / 57 | 4.88 | 10.00 | 32 | 35 | 38 | 41 | 5 | **1009600000** |
| **PG** | | | | | | | | | | | | |
| VGPG13.5-MS54 | PG 13.5 | 7.5-12.5 | 22 / 6.5 | 20 / 22 | 4.20 | 6.25 | 7.5 | 10 | 12.5 | 0 | 50 | **1009610000** |
| VG PG16-MS54 | PG 16 | 7.5-15 | 27 / 6.5 | 22 / 24 | 5.00 | 7.50 | 7.5 | 10 | 12.5 | 15 | 50 | **1009620000** |
| VG PG21-MS54 | PG 21 | 10-19 | 29.5 / 7 | 28 / 30 | 6.70 | 10.00 | 10 | 13 | 16 | 19 | 25 | **1009630000** |
| VG PG29-MS54 | PG 29 | 18-27 | 33 / 8 | 37 / 40 | 6.70 | 10.00 | 18 | 21 | 24 | 27 | 25 | **1009640000** |
| VG PG36-MS54 | PG 36 | 24-33 | 39 / 9 | 47 / 50 | 6.70 | 10.00 | 24 | 27 | 30 | 33 | 10 | **1009650000** |
| VG PG42-MS54 | PG 42 | 30-39 | 44 / 10 | 54 / 57 | 6.70 | 10.00 | 30 | 33 | 36 | 39 | 5 | **1009670000** |

**Note** D1-D4 are the removable seal incisions from 4 mm to 41 mm.

## Cable glands - Brass - IP 68

Standard brass cable gland for industrial applications that require IP 68 or IP 69K protection.

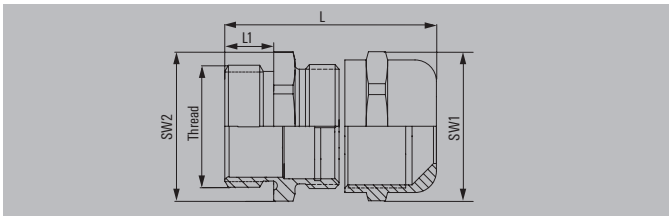


## Technical data

| | |
|---|---|
| Material | Brass, nickel-plated |
| O-ring / Seal insert | NBR / CR |
| Temperature range | -40 °C...100 °C |
| Clamp insert | Polyamide |
| Protection degree with GWDR | IP 68 - 5 bar, IP 69K |

**Note** Length „L" varies depending on the cable diameter used; IP 69K applies to all metric cable glands; the following thread sizes PG29, PG36, PG42 and PG48 are excluded from IP 69K.

## Ordering data

| Typ | Thread | KB | L/L1 | SW1/SW2 | TRQ CN min. / max. | TRQ BO min. / max. | Qty. | Order No. |
|---|---|---|---|---|---|---|---|---|
| **metric** | | | | | | | | |
| VG M12 - MS 68 | M 12 / 1.5 | 3-6.5 | 28 / 6 | 14 / 14 | 4.50 / 5.50 | 2.50 / 3.50 | 50 | **1772200000** |
| VG M16 - MS 68 | M 16 / 1.5 | 4-8 | 33 / 7 | 17 / 18 | 5.00 / 6.00 | 3.50 / 4.50 | 50 | **1772210000** |
| VG M16-1/MS68 | M 16 / 1.5 | 4.5-10 | 37.3 / 7 | 20 / 20 | 5.00 / 6.00 | 3.50 / 4.50 | 50 | **1909910000** |
| VG M20 - MS 68 | M 20 / 1.5 | 6-12 | 38 / 8 | 22 / 22 | 7.00 / 9.00 | 5.00 / 6.00 | 50 | **1772220000** |
| VG M25 - MS 68 | M 25 / 1.5 | 10-14 | 42 / 8 | 24 / 27 | 10.00 / 12.00 | 5.00 / 7.00 | 25 | **1772230000** |
| VG M25-1/MS68 | M 25 / 1.5 | 11-17 | 42 / 8 | 27 / 27 | 10.00 / 12.00 | 5.00 / 7.00 | 25 | **1909920000** |
| VG M32 - MS 68 | M 32 / 1.5 | 13-18 | 48 / 9 | 30 / 34 | 16.00 / 18.00 | 5.00 / 7.00 | 25 | **1772240000** |
| VG M32-1/MS68 | M 32 / 1.5 | 15-21 | 45 / 8 | 34 / 34 | 16.00 / 18.00 | 5.00 / 7.00 | 20 | **1909930000** |
| VG M40 - MS 68 | M 40 / 1.5 | 18-25 | 53 / 9 | 40 / 43 | 21.00 / 23.00 | 10.50 / 13.50 | 20 | **1772250000** |
| VG M40-1/MS68 | M 40 / 1.5 | 19-28 | 55.1 / 9 | 43 / 43 | 21.00 / 23.00 | 10.50 / 13.50 | 20 | **1909940000** |
| VG M50 - MS 68 | M 50 / 1.5 | 22-32 | 57 / 9 | 50 / 55 | 38.50 / 41.50 | 16.00 / 20.00 | 15 | **1772260000** |
| VG M50-1/MS68 | M 50 / 1.5 | 27-38 | 62.2 / 9 | 58 / 58 | 38.50 / 41.50 | 16.00 / 20.00 | 12 | **1909950000** |
| VG M63 - MS 68 | M 63 / 1.5 | 34-44 | 65 / 14 | 64 / 68 | 48.00 / 52.00 | 22.50 / 27.50 | 12 | **1772270000** |
| **PG (IP 69K)** | | | | | | | | |
| VG 7-MS68 | PG 7 | 3-6.5 | 28 / 6 | 14 / 14 | 4.50 / 5.50 | 2.50 / 3.50 | 50 | **1569060000** |
| VG 9-MS68 | PG 9 | 4-8 | 28 / 6 | 17 / 17 | 5.00 / 6.00 | 3.50 / 4.50 | 50 | **1569070000** |
| VG 11-MS68 | PG 11 | 5-10 | 31 / 6 | 20 / 20 | 6.50 / 7.50 | 4.50 / 5.50 | 50 | **1569080000** |
| VG 13.5-MS68 | PG 13.5 | 6-12 | 31 / 6.5 | 22 / 22 | 7.00 / 9.00 | 4.50 / 6.50 | 50 | **1569090000** |
| VG 16-MS68 | PG 16 | 10-14 | 34 / 6.5 | 24 / 24 | 10.00 / 12.00 | 6.00 / 8.00 | 25 | **1569100000** |
| VG 21-MS68 | PG 21 | 13-18 | 39 / 7 | 30 / 30 | 16.00 / 18.00 | 9.00 / 11.00 | 25 | **1569110000** |
| **PG (IP68)** | | | | | | | | |
| VG 29-MS68 | PG 29 | 18-25 | 47 / 8 | 40 / 50 | 21.00 / 23.00 | 13.50 / 16.50 | 20 | **1569120000** |
| VG 36-MS68 | PG 36 | 22-32 | 57 / 10 | 50 / 50 | 38.50 / 41.50 | 18.00 / 22.00 | 15 | **1569130000** |
| VG 42-MS68 | PG 42 | 30-38 | 60 / 12 | 58 / 58 | 43.00 / 47.00 | 25.00 / 29.00 | 12 | **1569140000** |
| VG 48-MS68 | PG 48 | 34-44 | 63 / 14 | 64 / 64 | 48.00 / 52.00 | 32.50 / 37.50 | 12 | **1718790000** |

**Note** Long-thread version on request
VDE for metric version

## Cable glands - Brass - ZE

Brass cable glands with external, centrally positioned strain relief provided by clamping jaws. The seal insert which is used contains several removable or separable inlets.

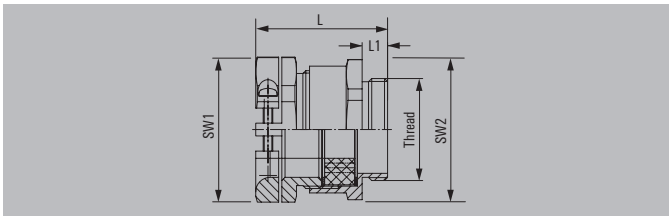


## Technical data

| | |
|---|---|
| Material | Brass, nickel-plated |
| Seal insert | NBR |
| Temperature range | -20 °C...80 °C |
| Protection degree | IP 54 |

| | |
|---|---|
| **Note** | Optional sealing ring<br>Length „L" varies depending on the cable diameter used. |

## Ordering data

| Typ | Thread | KB | KB ZE | L/L1 | SW1/SW2 | TRQ CN min. / max. | TRQ BO min. / max. | Qty. | Order No. |
|---|---|---|---|---|---|---|---|---|---|
| **metric** | | | | | | | | | |
| VGM12-MS54 ZE | M 12 / 1.5 | 5-7 | 5.8-8 | 21.5 / 6 | 14 / 16 | 5.33 / 5.33 | 8.00 / 8.00 | 100 | **1778420000** |
| VGM16-MS54 ZE | M 16 / 1.5 | 4-10 | 6.5-10 | 26 / 6 | 18 / 19 | 6.67 / 6.67 | 10.00 / 10.00 | 100 | **1778440000** |
| VGM20-MS54 ZE | M 20 / 1.5 | 6.5-12.5 | 7.5-12 | 26.5 / 6.5 | 22 / 22 | 8.00 / 8.00 | 12.00 / 12.00 | 50 | **1778450000** |
| VGM20-MS54 ZE | M 20 / 1.5 | 6.5-12.5 | 8.5-14 | 26.5 / 6.5 | 22 / 24 | 8.00 / 8.00 | 12.00 / 12.00 | 50 | **1778460000** |
| VGM25-MS54 ZE | M 25 / 1.5 | 9-19 | 12-21 | 29.5 / 7 | 30 / 34 | 8.00 / 8.00 | 12.00 / 12.00 | 50 | **1778480000** |
| VGM32-MS54 ZE | M 32 / 1.5 | 17-27 | 19-30 | 33 / 8 | 40 / 42 | 12.00 / 12.00 | 18.00 / 18.00 | 25 | **1778490000** |
| VGM40-MS54 ZE | M 40 / 1.5 | 23-33 | 25-37 | 33 / 8 | 50 / 52 | 12.00 / 12.00 | 18.00 / 18.00 | 25 | **1778500000** |
| VGM50-MS54 ZE | M 50 / 1.5 | 29-39 | 31-43 | 43 / 9 | 57 / 59 | 13.33 / 13.33 | 20.00 / 20.00 | 5 | **1778520000** |
| VGM63-MS54 ZE | M 63 / 1.5 | 35-45 | 35-48 | 45 / 10 | 66 / 64 | 13.33 / 13.33 | 20.00 / 20.00 | 5 | **1778530000** |
| **PG** | | | | | | | | | |
| VG 7-MS54-ZE | PG 7 | 5-7 | 5.8-8 | 27 / 5 | 14 / 16 | 4.20 / 4.20 | 6.25 / 6.25 | 50 | **1718800000** |
| VG 9-MS54-ZE | PG 9 | 4-10 | 6.5-10 | 30.5 / 6 | 17 / 19 | 4.20 / 4.20 | 6.25 / 6.25 | 50 | **1718810000** |
| VG 11-MS54-ZE | PG 11 | 6.5-12.5 | 7.5-12 | 31.5 / 6 | 20 / 22 | 4.20 / 4.20 | 6.25 / 6.25 | 50 | **1718820000** |
| VG 13.5-MS54-ZE | PG 13.5 | 6.5-12.5 | 8.5-14 | 32 / 6.5 | 22 / 24 | 4.20 / 4.20 | 6.25 / 6.25 | 50 | **1718830000** |
| VG 16-MS54-ZE | PG 16 | 6.5-15 | 9.5-17 | 33 / 6.5 | 24 / 27 | 5.00 / 5.00 | 7.50 / 7.50 | 50 | **1718840000** |
| VG 21-MS54-ZE | PG 21 | 9-19 | 12-21 | 38 / 7 | 30 / 34 | 6.70 / 6.70 | 10.00 / 10.00 | 50 | **1718850000** |
| VG 29-MS54-ZE | PG 29 | 17-27 | 19-30 | 43 / 8 | 40 / 40 | 6.70 / 6.70 | 10.00 / 10.00 | 25 | **1718860000** |
| VG 36-MS54-ZE | PG 36 | 23-33 | 25-37 | 49.5 / 9 | 50 / 50 | 6.70 / 6.70 | 10.00 / 10.00 | 10 | **1718870000** |
| VG 42-MS54-ZE | PG 42 | 29-39 | 31-43 | 53.5 / 10 | 57 / 57 | 6.70 / 6.70 | 10.00 / 10.00 | 5 | **1718880000** |
| VG 48-MS54-ZE | PG 48 | 35-45 | 35-48 | 55 / 10 | 64 / 64 | 6.70 / 6.70 | 10.00 / 10.00 | 5 | **1718890000** |
| **Note** | | Further versions on request | | | | | | | |

## Cable glands - Brass - ZE - BS

Industrial brass cable glands with strain-relief and trumpet-shaped anti-bend mechanism for connecting non-stationary cables and lines. The seal insert which is used contains several removable or separable inlets.

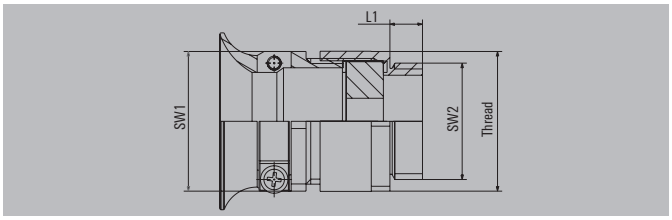


### Technical data

| | |
|---|---|
| Material | Brass, nickel-plated |
| Seal insert | NBR |
| Temperature range | -20 °C...80 °C |
| Protection degree | IP 54 |

**Note**

### Ordering data

| Typ | Thread | KB | KB ZE | L/L1 | SW1/SW2 | TRQ CN min. / max. | TRQ BO min. / max. | Qty. | Order No. |
|---|---|---|---|---|---|---|---|---|---|
| **metric** | | | | | | | | | |
| VGM16-MS54ZE | M 16 / 1.5 | 4-10 | 6-9 | 5 / 6 | 18 / 22 | 6.70 / 6.70 | 10.00 / 10.00 | 50 | **1005190000** |
| VGM16-MS54ZE | M 16 / 1.5 | 6.5-12.5 | 8-12 | 34 / 5 | 20 / 26 | 6.70 / 6.70 | 10.00 / 10.00 | 50 | **1005200000** |
| VGM20-MS54ZE | M 20 / 1.5 | 6.5-12.5 | 8-12 | 37.8 / 6 | 22 / 26 | 8.00 / 8.00 | 12.00 / 12.00 | 50 | **1005210000** |
| VGM20-MS54ZE | M 20 / 1.5 | 6.5-15 | 10-15 | 37.8 / 6.5 | 24 / 32 | 8.00 / 8.00 | 12.00 / 12.00 | 50 | **1005220000** |
| VGM25-MS54ZE | M 25 / 1.5 | 9-19 | 14-20 | 44 / 7 | 30 / 38 | 8.00 / 8.00 | 12.00 / 12.00 | 25 | **1005230000** |
| VGM32-MS54ZE | M 32 / 1.5 | 17-27 | 18-27 | 50.8 / 8 | 40 / 50 | 12.00 / 12.00 | 18.00 / 18.00 | 25 | **1005240000** |

**Note**

## Clamping screws - Brass - IP 65

The halved cable glands are designed for use in HDC – RockStar® base and hoods. The seal insert which is used contains several removable or separable inlets.

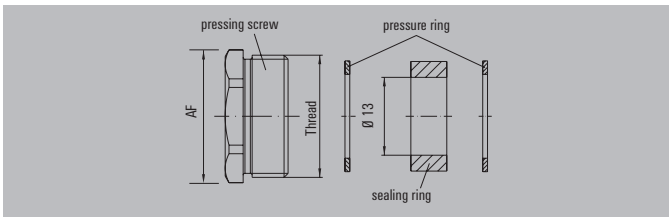


## Technical data

| | |
|---|---|
| Clamping screw material | Brass, nickel-plated |
| Sealing ring material | SBR/NBR |
| Pressure ring material | Polyamide |
| Temperature range | -20 °C...60 °C |
| Protection degree | IP 65 |

**Note**

## Ordering data

| Typ | Thread | Inserts in mm | SW | Qty. | Order No. |
|---|---|---|---|---|---|
| **metric** | | | | | |
| VG H M20 MS | M 20 / 1.5 | 4 / 7 / 10 / 13 | 20 | 50 | **1921720000** |
| VG H M25 MS | M 25 / 1.5 | 8.5 / 11.5 / 14.5 / 18 | 25 | 25 | **1921740000** |
| VG H M32 MS | M 32 / 1.5 | 16 / 19 / 22 / 25 | 32 | 20 | **1921760000** |
| VG H M40 MS | M 40 / 1.5 | 23 / 26 / 29 / 32 | 40 | 10 | **1921770000** |
| **PG** | | | | | |
| KV 11-M | PG 11 | 7.5 / 10 / 12.5 | 10 | 10 | **1656390000** |
| KV 13-M | PG 13 | 7.5 / 10 / 12.5 | 10 | 10 | **1656400000** |
| KV 16-M | PG 16 | 7.5 / 10 / 12.5 / 15 | 10 | 10 | **1656410000** |
| KV 21-M | PG 21 | 10 / 13 / 16 / 19 | 10 | 10 | **1656420000** |
| KV 29-M | PG 29 | 18 / 21 / 24 / 27 | 10 | 10 | **1656430000** |

**Note**

## Cable glands - Brass - EMC

Brass cable gland for shielding against interference frequencies with a screening attenuation of up to 100 dB. Contact with cable shield by means of spring washer.

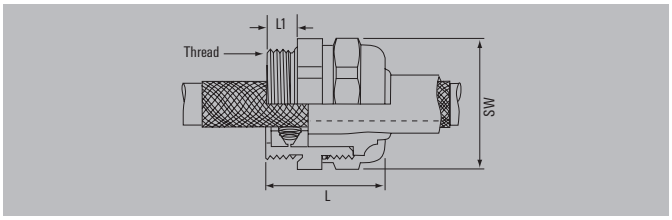


## Technical data

| | |
|---|---|
| Material | Brass, nickel-plated |
| O-Ring | NBR |
| Temperature range | -40 °C...135 °C |
| Protection degree | IP 68 - 10 bar |
| Clamp insert | TPE |

**Note** Length „L" varies according to cable diameter used

## Ordering data

| Typ | Thread | KB | Shield Ø | L/L1 | SW | TRQ CN min. / max. | TRQ BO min. / max. | Qty. | Order No. |
|---|---|---|---|---|---|---|---|---|---|
| **metric** | | | | | | | | | |
| VG EMV M18X1.5 | M 18 / 1.5 | 6.5-9 | 3.50-7.50 | 41 / 10 | 24 | 9.00 / 30.00 | 30.00 / 30.00 | 50 | **1706920000** |
| VG EMV M20X1.5 | M 20 / 1.5 | 8-11 | 4.00-8.50 | 41 / 10 | 24 | 9.00 / 10.00 | 9.00 / 9.00 | 50 | **1706940000** |
| VG EMV M24X1.5 | M 24 / 1.5 | 14-18 | 9.50-16.50 | 43 / 11 | 30 | 10.00 / 10.00 | 10.00 / 10.00 | 50 | **1706930000** |
| VG EMV M25X1.5 | M 25 / 1.5 | 14-18 | 8.00-13.50 | 43 / 11 | 30 | 10.00 / 10.00 | 10.00 / 10.00 | 25 | **1706950000** |
| **PG** | | | | | | | | | |
| VG EMV PG 7/9 | PG 7 | 4-6.5 | 1.50-4.00 | 32 / 5 | 17 | 6.00 / 20.00 | 20.00 / 20.00 | 50 | **1713870000** |
| VG EMV PG 9/11 | PG 9 | 6.5-9.5 | 2.50-6.00 | 34 / 6 | 20 | 6.00 / 8.00 | 6.00 / 6.00 | 50 | **1706860000** |
| VG EMV PG 11 | PG 11 | 6.5-9 | 3.50-7.50 | 41 / 10 | 24 | 10.00 / 10.00 | 10.00 / 10.00 | 50 | **1706870000** |
| VG EMV PG 13.5 | PG 13.5 | 8-11 | 4.00-8.50 | 41 / 10 | 24 | 10.00 / 10.00 | 10.00 / 10.00 | 50 | **1706880000** |
| VG EMV PG 16 K14 | PG 16 | 10-14 | 6.50-11.50 | 43 / 11 | 30 | 10.00 / 10.00 | 10.00 / 10.00 | 25 | **1706890000** |
| VG EMV PG 16 K18 | PG 16 | 14-18 | 6.50-11.50 | 43 / 11 | 30 | 10.00 / 10.00 | 10.00 / 10.00 | 25 | **1713880000** |
| VG EMV PG 21 K18 | PG 21 | 17-20 | 12.50-17.50 | 45 / 11 | 35 | 10.00 / 15.00 | 10.00 / 10.00 | 10 | **1706900000** |
| VG EMV PG K28 | PG 21 | 17-20 | 12.50-17.50 | 45 / 11 | 35 | 8.00 / 15.00 | 8.00 / 8.00 | 10 | **1713890000** |
| VG EMV PG 29 K26 | PG 29 | 22-26 | 15.00-21.00 | 52 / 13 | 40 | 15.00 / 20.00 | 15.00 / 15.00 | 10 | **1706910000** |
| VG EMV PG 29 K29 | PG 29 | 25-29 | 22.00-25.00 | 58 / 13 | 50 | 20.00 / 20.00 | 20.00 / 20.00 | 5 | **1713900000** |
| VG EMV PG36 K32-27 | PG 36 | 27-32 | 24.00-30.50 | 54 / 9 | 50 | 15.00 / 30.00 | 15.00 / 15.00 | 10 | **1770410000** |

**Note** Further versions on request

## Cable glands - Brass - 1/EMC

Brass cable gland for shielding against interference frequencies with a shield attenuation of up to 90 dB. Conical metal cage ensures multiple contacts with the cable shielding. On installation, the cable gland does not have divide into its individual parts, enabling particularly simple installation.

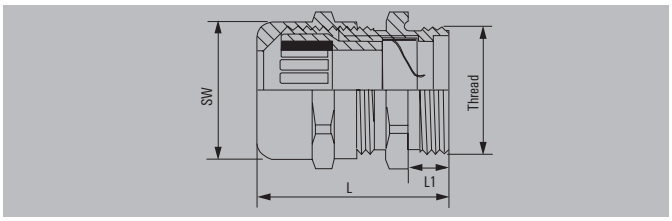


### Technical data

| | |
|---|---|
| Material | Brass, nickel-plated |
| O-ring / Seal insert | NBR / CR |
| Temperature range | -40 °C...100 °C |
| Protection degree | IP 68 - 10 bar |
| Clamp insert | Polyamide |

**Note** Length „L" varies according to cable diameter used

### Ordering data

| Typ | Thread | KB | Shield Ø | L/L1 | SW | TRQ CN min. / max. | TRQ BO min. / max. | Qty. | Order No. |
|---|---|---|---|---|---|---|---|---|---|
| **metric** | | | | | | | | | |
| VG M12 - MS 1/EMV | M 12 / 1.5 | 3-6.5 | 3.00-6.50 | 28.5 / 6 | 14 | 6.00 / 8.00 | 8.00 / 10.00 | 50 | **1909490000** |
| VG M16 - MS 1/EMV | M 16 / 1.5 | 4.5-10 | 4.00-10.00 | 37.3 / 7 | 20 | 5.00 / 7.00 | 8.00 / 10.00 | 50 | **1909500000** |
| VG M20 - MS 1/EMV | M 20 / 1.5 | 6-12 | 5.00-12.00 | 38.8 / 8 | 22 | 8.00 / 10.00 | 12.00 / 15.00 | 50 | **1909510000** |
| VG M25 - MS 1/EMV | M 25 / 1.5 | 11-17 | 10.00-17.00 | 42 / 8 | 27 | 6.00 / 8.00 | 9.00 / 12.00 | 25 | **1909520000** |
| VG M32 - MS 1/EMV | M 32 / 1.5 | 15-21 | 13.50-21.00 | 45 / 8 | 34 | 6.00 / 10.00 | 9.00 / 15.00 | 20 | **1909530000** |
| VG M40 - MS 1/EMV | M 40 / 1.5 | 19-28 | 17.00-28.00 | 55.1 / 9 | 43 | 7.00 / 10.00 | 10.00 / 15.00 | 10 | **1909540000** |
| VG M50 - MS 1/EMV | M 50 / 1.5 | 27-38 | 25.00-38.00 | 62.2 / 9 | 58 | 20.00 / 30.00 | 30.00 / 45.00 | 10 | **1909550000** |
| VG M63 - MS 1/EMV | M 63 / 1.5 | 34-44 | 31.00-44.00 | 71.5 / 14 | 64 | 23.00 / 28.00 | 30.00 / 40.00 | 5 | **1909560000** |

**Note** Further versions on request

## Cable glands - Stainless steel - IP 68

Stainless steel cable glands for standard industrial applications that require a high degree of protection (IP 68). These cable glands – with their resistance to impact and sea water – are also suitable for use in applications under extreme environmental conditions.

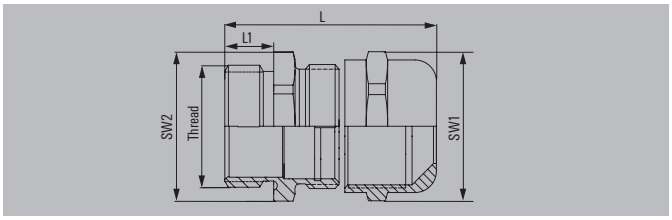


## Technical data

| | |
|---|---|
| Material | Stainless steel 1.4305 (303) |
| O-Ring / Seal insert | NBR / CR |
| Temperature range | -40 °C...100 °C |
| Protection degree | IP 69K, IP 68 - 5 bar (30 min.) |

**Note**

## Ordering data

| Typ | Thread | KB | L/L1 | SW1/SW2 | TRQ CN min. / max. | TRQ BO min. / max. | Qty. | Order No. |
|---|---|---|---|---|---|---|---|---|
| **metric** | | | | | | | | |
| VGM12-SS 68 KB 3-6.5 | M 12 / 1.5 | 3-6.5 | 28 / 6 | 14 / 14 | 5.00 / 7.00 | 10.00 / 8.00 | 50 | **1009840000** |
| VGM16-SS 68 KB 4-8 | M 16 / 1.5 | 4-8 | 33 / 7 | 17 / 19 | 8.00 / 10.00 | 15.00 / 12.00 | 50 | **1009850000** |
| VGM20-SS 68 KB 6-12 | M 20 / 1.5 | 6-12 | 38 / 8 | 22 / 22 | 12.00 / 15.00 | 22.00 / 16.00 | 50 | **1009860000** |
| VGM25-SS 68 KB 10-14 | M 25 / 1.5 | 10-14 | 42 / 8 | 24 / 27 | 15.00 / 20.00 | 30.00 / 22.00 | 25 | **1009870000** |
| VGM32-SS 68 KB 13-18 | M 32 / 1.5 | 13-18 | 48 / 9 | 30 / 36 | 28.00 / 35.00 | 50.00 / 40.00 | 20 | **1009880000** |
| VGM40-SS 68 KB 18-25 | M 40 / 1.5 | 18-25 | 53 / 9 | 41 / 46 | 30.00 / 40.00 | 60.00 / 45.00 | 20 | **1009890000** |
| VGM50-SS 68 KB 22-32 | M 50 / 1.5 | 22-32 | 57 / 9 | 50 / 55 | 35.00 / 45.00 | 60.00 / 50.00 | 12 | **1009900000** |
| VGM63-SS 68 KB 34-44 | M 63 / 1.5 | 34-44 | 65 / 14 | 65 / 70 | 45.00 / 55.00 | 70.00 / 60.00 | 10 | **1009910000** |
| **PG** | | | | | | | | |
| VG 7-SS 68 KB 3-6.5 | PG 7 | 3-6.5 | 28 / 6 | 14 / 14 | 5.00 / 7.00 | 10.00 / 8.00 | 50 | **1009740000** |
| VG 9-SS 68 KB 4-8 | PG 9 | 4-8 | 28 / 6 | 17 / 17 | 8.00 / 10.00 | 15.00 / 12.00 | 50 | **1009750000** |
| VG 11-SS 68 KB 5-10 | PG 11 | 5-10 | 31 / 6 | 22 / 22 | 10.00 / 13.00 | 20.00 / 15.00 | 50 | **1009760000** |
| VG 16-SS 68 KB 10-14 | PG 16 | 10-14 | 34 / 6.5 | 24 / 24 | 15.00 / 20.00 | 30.00 / 22.00 | 25 | **1009780000** |
| VG 21-SS 68 KB 13-18 | PG 21 | 13-18 | 39 / 7.5 | 30 / 30 | 28.00 / 35.00 | 50.00 / 40.00 | 25 | **1009790000** |
| VG 29-SS 68 KB 18-25 | PG 29 | 18-25 | 47 / 8 | 41 / 41 | 30.00 / 40.00 | 60.00 / 45.00 | 20 | **1009800000** |
| VG 36-SS 68 KB 22-32 | PG 36 | 22-32 | 57 / 9 | 50 / 50 | 35.00 / 45.00 | 60.00 / 50.00 | 15 | **1009810000** |
| VG 42-SS 68 KB 30-38 | PG 42 | 30-38 | 60 / 12 | 60 / 60 | 40.00 / 50.00 | 70.00 / 55.00 | 12 | **1009820000** |
| VG 48-SS 68 KB 34-44 | PG 48 | 34-44 | 63 / 14 | 65 / 65 | 45.00 / 55.00 | 70.00 / 60.00 | 10 | **1009830000** |
| **Note** | 1.4404 (316L) on request | | | | | | | |

# Overview: Klippon® cable glands and selection tool

**ATEX / IECEx certified cable glands and stopping plugs**

| Cable Gland Type | Outer Elastomeric Seal | Inner Elastomeric Seal | Lead Option | Armour Clamp | Certification | IP Rating | Page No. |
|---|---|---|---|---|---|---|---|
| KDSU | YES | YES | NO | Universal | Ex d / Ex e | IP 68 | C.30 |
| KDSW | YES | YES | YES | Steel wire | Ex d / Ex e | IP 66, IP 68 | C.34 |
| KDSX | YES | YES | NO | Braided | Ex d / Ex e | IP 66, IP 68 | C.40 |
| KUB | YES | Compound | NO | Universal | Ex d | IP 68 | C.44 |
| KSG | YES | NO | NO | No | Ex d / Ex e | IP 66, IP 68 | C.42 |



# General

### Health & Safety

When Weidmüller cable glands and the accessories are used and installed as prescribed within the data sheet provided, they will not cause any danger or hazard to the health or safety of persons, animals or property. The products should be installed by suitably trained/skilled personnel and in full accordance with the relevant legislative regulations and the accepted code of practice for the industry concerned.

### Warning

Weidmüller cable glands and accessories should not be used within any application other than those specified for each product, unless Weidmüller issue a statement in writing that the product is suitable for the specified application. For further information on each product, we refer you to the specific Assembly Instructions and General Arrangement drawings, which are available on request. Weidmueller takes no responsibility for any damage, unjury or other consequential loss caused where the glands are not installed or used according to our Assembly Instructions.

### Installation in hazardous area applications

If cable glands and accessories are installed in hazardous area applications, international and national standards of the Explosion Protection have to be considered.

The KDSU type glands provide a universal armour clamp for steel wire, steel tape, screened or braided cables. An electrical bond between the cable armour and the gland is ensured. The gland can also be used to terminate un-armoured cables. In addition, the gland is fitted with two separate seals to seal the outer and inner cable insulation.
When choosing the gland with a neoprene sealing a temperature range from -20 °C to +85 °C will be achieved. Whereas the gland with silicone sealing ensures a temperature range from -60 °C to +180 °C. With both sealing materials an IP rating of IP 68 to 25 metres (30 min. at 2.5 bar) is maintained. The KDSU type gland is approved for Flameproof Ex d and Increased Safety Ex e applications.

## Structure of the part description

| Order key | [Type] | [a] | [b] | [c] | [d] | [e] | [f] | [ggg] |
|---|---|---|---|---|---|---|---|---|
| Example article description | KDSU | M20 | B | S | 0 | SC | 1 | G16 |

Meaning

[Type] = Gland type (KDSU)
[a] = Entry thread (M20-M75)
[b] = Material (B = brass)
[c] = Seal material (S = Silicone, N = Neoprene)
[d] = Continuity for lead sheath (L = yes, 0 = no)
[e] = Plating (SC = self-coloured, NI = Nickel)
[f] = Cable outer sheath (1 = Reduced, 2 = Standard)
[ggg] = Gland size (G16-G75)

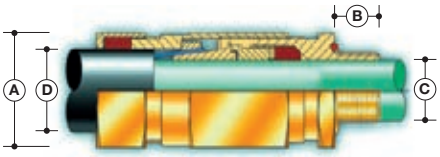


**Note** Refer to page C.27 Selection Guide Klippon® Cable Glands to determine the suitable order number

## Dimensions

| Gland Size [ggg] | Entry thread [a] | Entry thread Length [B] | Max Outer Diameter [A] | Max Length | Gland Seal Range: Cable Inner Sheath [C] Min | Cable Inner Sheath [C] Max | Cable Outer Sheath [D] Standard [f] = 2 Min | Cable Outer Sheath [D] Standard [f] = 2 Max | Cable Outer Sheath [D] Reduced [f] = 1 Min | Cable Outer Sheath [D] Reduced [f] = 1 Max | Armour Acceptance Range | Shroud Size |
|---|---|---|---|---|---|---|---|---|---|---|---|---|
| G16 | M20 | 16 | 28.0 | 78.0 | 3.4 | 8.4 | 9.0 | 13.5 | 6.7 | 10.3 | 0.15 - 1.25 | L24 |
| G20S | M20 | 16 | 28.0 | 78.0 | 7.2 | 11.7 | 11.5 | 16.0 | 9.4 | 12.5 | 0.15 - 1.25 | L24 |
| G20 | M20 | 16 | 33.0 | 78.0 | 9.4 | 14.0 | 15.5 | 21.1 | 12.0 | 17.6 | 0.15 - 1.25 | EL30 |
| G25 | M25 | 16 | 41.4 | 90.0 | 13.5 | 20.0 | 20.3 | 27.4 | 16.8 | 23.9 | 0.15 - 1.60 | EL38 |
| G32 | M32 | 16 | 50.6 | 105.0 | 19.5 | 26.3 | 26.7 | 34.0 | 23.2 | 30.5 | 0.15 - 2.00 | EL46 |
| G40 | M40 | 16 | 60.5 | 113.0 | 23.0 | 32.2 | 33.0 | 40.6 | 28.6 | 36.2 | 0.20 - 2.00 | EL55 |
| G50S | M50 | 16 | 71.5 | 125.0 | 28.1 | 38.2 | 39.4 | 46.7 | 34.8 | 42.4 | 0.30 - 2.50 | EL65 |
| G50 | M50 | 16 | 71.5 | 125.0 | 33.1 | 44.1 | 45.7 | 53.2 | 41.1 | 48.5 | 0.30 - 2.50 | EL65 |
| G63S | M63 | 19 | 88.0 | 125.0 | 39.2 | 50.1 | 52.1 | 59.5 | 47.5 | 54.8 | 0.30 - 2.50 | EL80 |
| G63 | M63 | 19 | 88.0 | 125.0 | 46.7 | 56.0 | 58.4 | 65.8 | 53.8 | 61.2 | 0.30 - 2.50 | EL80 |
| G75S | M75 | 19 | 99.0 | 131.0 | 52.1 | 62.0 | 64.8 | 72.2 | 60.2 | 68.0 | 0.30 - 2.50 | EL90 |
| G75 | M75 | 19 | 99.0 | 131.0 | 58.0 | 68.0 | 71.1 | 78.0 | 66.5 | 73.4 | 0.30 - 2.50 | EL90 |

Dimensions in mm

## Important Notes

- The gland size does not necessarily equate to the entry thread size.
- In some cases several gland sizes can be chosen due to overlaping inner as well as outer cable diameters. Due to the wide range of armoured cables available, it is necessary to select the correct clamping range. This is achieved by taking the inner and outer clamping range values to determine the best fit (as close as possible to the Min/Max values average).
- All cable glands have a 1.5 mm pitch.
- For Flameproof Ex d applications the female thread into which the gland is to be fitted must achieve an engagement of at least 5 full threads in compliance with clause 5.3 of EN/IEC 60079-1.
- Where KDSU glands are fitted into non-metallic Increased Safety Ex e enclosures they must be included within the earth circuit of the system.
- Fully assembly instructions are supplied with the glands. The instructions must be read prior to installation and adhered to in full.
- When the gland is used to terminate un-armoured cables, the gland is suitable only for fixed installation.

The KDSW glands provide an armour clamp for steel wire, steel tape and lead sheathed cables. An electrical bond between the cable armour and the gland is ensured. In addition, the gland is fitted with two separate sealings to seal the outer and inner cable insulation.
When choosing the gland with a neoprene sealing a temperature range from -20 °C to +85 °C will be achieved, whereas the gland with silicone sealing ensures a temperature range from -60 °C to +180 °C.
With both sealing materials an IP rating of IP 66 and IP 68 to 25 metres (30 min at 2.5 bar) is maintained.
The KDSW gland is approved for Flameproof Ex d and Increased Safety Ex e applications.

## Structure of the part description

| Order key | [Type] | [a] | [b] | [c] | [d] | [e] | [f] | [ggg] |
|---|---|---|---|---|---|---|---|---|
| Example article description | KDSW | M20 | B | S | L | SC | 1 | G16 |

Meaning

[Type] = Gland type (KDSW)
[a] = Entry thread (M20-M75)
[b] = Material (B = brass)
[c] = Seal material (S = Silicone, N = Neoprene)
[d] = Continuity for lead sheath (L = yes, O = no)
[e] = Plating (SC = self-coloured, NI = Nickel)
[f] = Cable outer sheath (1 = Reduced, 2 = Standard)
[ggg] = Gland size (G16-G75)

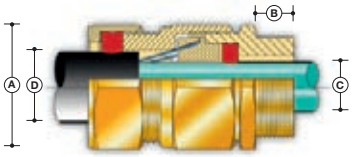


**Note** Refer to page C.27 Selection Guide Klippon® Cable Glands to determine the suitable order number

## Dimensions

| Gland Size [ggg] | Entry thread [a] | Entry thread Length [B] | Max Outer Diameter [A] | Max Length | Gland Seal Range: Cable Inner Sheath [C] Min | Cable Inner Sheath [C] Max | Cable Outer Sheath [D] Standard [f] = 2 Min | Standard [f] = 2 Max | Reduced [f] = 1 Min | Reduced [f] = 1 Max | Armour Acceptance Range | Shroud Size |
|---|---|---|---|---|---|---|---|---|---|---|---|---|
| G16 | M20 | 16 | 26.5 | 58.0 | 4.0 | 8.4 | 8.4 | 13.5 | 4.9 | 10.0 | 0.90 | L24 |
| G20S | M20 | 16 | 26.5 | 58.0 | 8.0 | 11.7 | 11.5 | 16.0 | 9.4 | 12.5 | 0.90 - 1.25 | L24 |
| G20 | M20 | 16 | 33.0 | 58.0 | 6.7 | 14.0 | 15.5 | 21.1 | 12.0 | 17.6 | 0.90 - 1.25 | L30 |
| G25 | M25 | 16 | 41.4 | 58.0 | 13.0 | 20.0 | 20.3 | 27.4 | 16.8 | 23.9 | 1.25 - 1.60 | L38 |
| G32 | M32 | 16 | 50.6 | 65.0 | 19.0 | 26.3 | 26.7 | 34.0 | 23.2 | 30.5 | 1.60 - 2.00 | L46 |
| G40 | M40 | 16 | 60.5 | 72.0 | 25.0 | 32.2 | 33.0 | 40.6 | 28.6 | 36.2 | 1.60 - 2.00 | L55 |
| G50S | M50 | 16 | 71.5 | 73.0 | 31.5 | 38.2 | 39.4 | 46.7 | 34.8 | 42.4 | 2.00 - 2.50 | L65 |
| G50 | M50 | 16 | 71.5 | 73.0 | 36.5 | 44.1 | 45.7 | 53.2 | 41.1 | 48.5 | 2.00 - 2.50 | L65 |
| G63S | M63 | 19 | 88.0 | 76.0 | 42.5 | 50.1 | 52.1 | 59.5 | 47.5 | 54.8 | 2.50 | L80 |
| G63 | M63 | 19 | 88.0 | 76.0 | 49.5 | 56.0 | 58.4 | 65.8 | 53.8 | 61.2 | 2.50 | L80 |
| G75S | M75 | 19 | 99.0 | 82.0 | 54.5 | 62.0 | 64.8 | 72.2 | 60.2 | 68.0 | 2.50 | L90 |
| G75 | M75 | 19 | 99.0 | 82.0 | 60.5 | 68.0 | 71.1 | 78.0 | 66.5 | 73.4 | 2.5 | L90 |

Dimensions in mm

## Important Notes

- The gland size does not necessarily equate to the entry thread size.
- In some cases several gland sizes can be chosen due to overlaping inner as well as outer cable diameters. Due to the wide range of armoured cables available, it is necessary to select the correct clamping range. This is achieved by taking the inner and outer clamping range values to determine the best fit (as close as possible to the Min/Max values average).
- All cable glands have a 1.5 mm pitch.
- For Flameproof Ex d applications the female thread into which the gland is to be fitted must achieve an engagement of at least 5 full threads in compliance with clause 5.3 of EN/IEC 60079-1.
- Where KDSW glands are fitted into non-metallic Increased Safety Ex e enclosures they must be included within the earth circuit of the system.
- Fully assembly instructions are supplied with the glands. The instructions must be read prior to installation and adhered to in full.
- When the gland is used to terminate un-armoured cables, the gland is suitable only for fixed installation.
- KDSW gland size G20 with silicone seal , the silicone inner seal only seals to a minimum of 11 mm and NOT 6.7 mm.

## Klippon® KDSX Cable Glands

The KDSX glands provide an armour clamp for braided cables. An electrical bond between the cable armour and the gland is ensured. In addition, the gland is fitted with two separate sealings to seal the outer and inner cable insulation.
The gland maintains a temperature range from -60 °C to +180 °C. With both sealing materials an IP rating of IP 66 and IP 68 to 25 metres (30 min at 2.5 bar) is maintained. The KDSX gland is approved for Flameproof Ex d and Increased Safety Ex e applications.

### Structure of the part description

| Order key | [Type] | [a] | [b] | [c] | [d] | [e] | [f] | [ggg] |
|---|---|---|---|---|---|---|---|---|
| Example article description | KDSX | M20 | B | S | 0 | SC | 1 | G16 |

Meaning

[Type] = Gland type (KDSX)
[a] = Entry thread (M20-M75)
[b] = Material (B = brass)
[c] = Seal material (S = Silicone)
[d] = Continuity for lead sheath (L = yes, 0 = no)
[e] = Plating (SC = self-coloured, NI = Nickel)
[f] = Cable outer sheath (1 = Reduced, 2 = Standard)
[ggg] = Gland size (G16-G75)

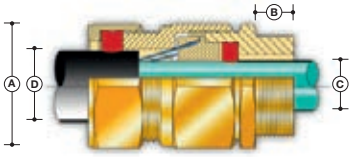


**Note** Refer to page C.27 Selection Guide Klippon® Cable Glands to determine the suitable order number

### Dimensions

| Gland Size | Entry thread | Entry thread Length | Max Outer Diameter | Max Length | Gland Seal Range: Cable Inner Sheath [C] | | Gland Seal Range: Cable Outer Sheath [D] Standard [f] = 2 | | Gland Seal Range: Cable Outer Sheath [D] Reduced [f] = 1 | | Armour Acceptance Range | Shroud Size |
|---|---|---|---|---|---|---|---|---|---|---|---|---|
| [ggg] | [a] | [B] | [A] | | Min | Max | Min | Max | Min | Max | | |
| G16 | M20 | 16 | 26.5 | 58.0 | 4.0 | 8.4 | 8.4 | 13.5 | 4.9 | 10.0 | 0.15 - 0.35 | L24 |
| G20S | M20 | 16 | 26.5 | 58.0 | 8.0 | 11.7 | 11.5 | 16.0 | 9.4 | 12.5 | 0.15 - 0.35 | L24 |
| G20 | M20 | 16 | 33.0 | 58.0 | 6.7 | 14.0 | 15.5 | 21.1 | 12.0 | 17.6 | 0.15 - 0.50 | L30 |
| G25 | M25 | 16 | 41.4 | 58.0 | 13.0 | 20.0 | 20.3 | 27.4 | 16.8 | 23.9 | 0.15 - 0.50 | L38 |
| G32 | M32 | 16 | 50.6 | 65.0 | 19.0 | 26.3 | 26.7 | 34.0 | 23.2 | 30.5 | 0.15 - 0.55 | L46 |
| G40 | M40 | 16 | 60.5 | 72.0 | 25.0 | 32.2 | 33.0 | 40.6 | 28.6 | 36.2 | 0.20 - 0.60 | L55 |
| G50S | M50 | 16 | 71.5 | 73.0 | 31.5 | 38.2 | 39.4 | 46.7 | 34.8 | 42.4 | 0.20 - 0.60 | L65 |
| G50 | M50 | 16 | 71.5 | 73.0 | 36.5 | 44.1 | 45.7 | 53.2 | 41.1 | 48.5 | 0.30 - 0.80 | L65 |
| G63S | M63 | 19 | 88.0 | 76.0 | 42.5 | 50.1 | 52.1 | 59.5 | 47.5 | 54.8 | 0.30 - 0.80 | L80 |
| G63 | M63 | 19 | 88.0 | 76.0 | 49.5 | 56.0 | 58.4 | 65.8 | 53.8 | 61.2 | 0.30 - 0.80 | L80 |
| G75S | M75 | 19 | 99.0 | 82.0 | 54.5 | 62.0 | 64.8 | 72.2 | 60.2 | 68.0 | 0.30 - 1.00 | L90 |
| G75 | M75 | 19 | 99.0 | 82.0 | 60.5 | 68.0 | 71.1 | 78.0 | 66.5 | 73.4 | 0.30 - 1.00 | L90 |

Dimensions in mm

### Important Notes

- The gland size does not necessarily equate to the entry thread size.
- In some cases several gland sizes can be chosen due to overlaping inner as well as outer cable diameters. Due to the wide range of armoured cables available, it is necessary to select the correct clamping range. This is achieved by taking the inner and outer clamping range values to determine the best fit (as close as possible to the Min/Max values average).
- All cable glands have a 1.5 mm pitch.
- For Flameproof Ex d applications the female thread into which the gland is to be fitted must achieve an engagement of at least 5 full threads in compliance with clause 5.3 of EN/IEC 60079-1.
- Where KDSX glands are fitted into non-metallic Increased Safety Ex e enclosures they must be included within the earth circuit of the system.
- Fully assembly instructions are supplied with the glands. The instructions must be read prior to installation and adhered to in full.
- When the gland is used to terminate un-armoured cables, the gland is suitable only for fixed installation.
- KDSX gland size G20 with silicone seal , the silicone inner seal only seals to a minimum of 11 mm and NOT 6.7 mm.

The KSG gland is designed to terminate un-armoured cables. When choosing the gland with a neoprene sealing a temperature range from -20 °C to +85 °C will be achieved, whereas the gland with silicone sealing ensures a temperature range from -60 °C to +180 °C. With both sealing materials an IP rating of IP 66 and IP 68 to 25 metres (30 min. at 2.5 bar) is maintained. The KSG type gland is approved for Flameproof Ex d and Increased Safety Ex e applications.

## Structure of the part description

| Order key | [Type] | [a] | [b] | [c] | [d] | [e] | [f] | [ggg] |
|---|---|---|---|---|---|---|---|---|
| Example article description | KSG | M20 | B | S | 0 | SC | 2 | G16 |

Meaning

[Type] = Gland type (KSG)
[a] = Entry thread (M20-M90)
[b] = Material (B = brass)
[c] = Seal material (S = Silicone, N = Neoprene)
[d] = Continuity for lead sheath (L = yes, 0 = no)
[e] = Plating (SC = self-coloured, NI = Nickel)
[f] = Cable outer sheath (2 = Standard)
[ggg] = Gland size (G16-G90)

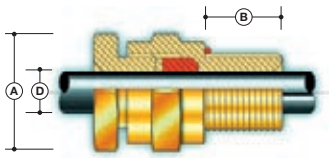


**Note** Refer to page C.27 Selection Guide Klippon® Cable Glands to determine the suitable order number

## Dimensions

| Gland Size [ggg] | Entry thread [a] | Entry thread Length [B] | Max Outer Diameter [A] | Max Length | Gland Seal Range: Cable Outer Sheath [D] Standard [f] = 2 Min | Max | Shroud Size |
|---|---|---|---|---|---|---|---|
| G16 | M20 | 16 | 28.0 | 33.0 | 4.0 | 8.4 | L24 |
| G20S | M20 | 16 | 28.0 | 33.0 | 7.2 | 11.7 | L24 |
| G20 | M20 | 16 | 33.0 | 33.0 | 9.6 | 14.0 | L30 |
| G25 | M25 | 16 | 41.4 | 33.0 | 13.5 | 20.0 | L38 |
| G32 | M32 | 16 | 50.6 | 33.0 | 19.5 | 26.3 | L46 |
| G40 | M40 | 16 | 60.5 | 37.0 | 23.0 | 32.2 | L55 |
| G50S | M50 | 16 | 71.5 | 37.0 | 28.2 | 38.2 | L65 |
| G50 | M50 | 16 | 71.5 | 37.0 | 33.2 | 44.1 | L65 |
| G63S | M63 | 19 | 88.0 | 37.0 | 39.3 | 50.1 | L80 |
| G63 | M63 | 19 | 88.0 | 37.0 | 46.7 | 56.0 | L80 |
| G75S | M75 | 19 | 99.0 | 37.0 | 52.3 | 62.0 | L90 |
| G75 | M75 | 19 | 99.0 | 37.0 | 58.1 | 69.0 | L90 |
| G85 | M85 | 25 | 115.2 | 50 | 69.1 | 78.0 | L104 |
| G90 | M90 | 25 | 125.7 | 50 | 74.1 | 84.0 | L114 |

Dimensions in mm

## Important Notes

- The gland size does not necessarily equate to the entry thread size.
- In some cases several gland sizes can be chosen due to overlaping inner as well as outer cable diameters. Due to the wide range of armoured cables available, it is necessary to select the correct clamping range. This is achieved by taking the inner and outer clamping range values to determine the best fit (as close as possible to the Min/Max values average).
- All cable glands have a 1.5 mm pitch.
- For Flameproof Ex d applications the female thread into which the gland is to be fitted must achieve an engagement of at least 5 full threads in compliance with clause 5.3 of EN/IEC 60079-1.
- Where KSG glands are fitted into non-metallic Increased Safety Ex e enclosures they must be included within the earth circuit of the system.
- Fully assembly instructions are supplied with the glands. The instructions must be read prior to installation and adhered to in full.
- When the gland is used to terminate un-armoured cables, the gland is suitable only for fixed installation.

## Klippon® KUB Cable Glands

The KUB gland provide an armour clamp for steel tape, steel wire and braided cables. An electrical bond between the cable armour and the gland is ensured. The gland can also be used to terminate unarmoured cables. Additionally, the gland provides a single pull resistant seal on the outer sheath of any cable. After clamping the cable armour onto the cone, the cable has to be filled with the provided compound to seal the free spaces between the single conductors.
The gland maintains a temperature range from -60 °C to +85 °C. When filled, the gland fulfills an IP rating of IP 68 to 100 metres (30 Min. at 10 bar). The KUB gland is only suitable for Ex d applications.

### Structure of the part description

| Order key | [Type] | [a] | [b] | [c] | [d] | [e] | [f] | [ggg] |
|---|---|---|---|---|---|---|---|---|
| Example article description | KUB | M20 | B | S | 0 | SC | 1 | G16 |

Meaning

[Type] = Gland type (KUB)
[a] = Entry thread (M20-M75)
[b] = Material (B = brass)
[c] = Seal material (S = Silicone)
[d] = Continuity for lead sheath (L = yes, 0 = no)
[e] = Plating (SC = self-coloured, NI = Nickel)
[f] = Cable outer sheath (1 = Reduced, 2 = Standard)
[ggg] = Gland size (G16-G75)

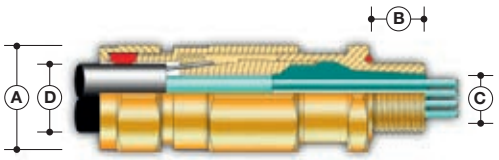


**Note** Refer to page C.27 Selection Guide Klippon® Cable Glands to determine the suitable order number

### Dimensions

| Gland Size | Entry thread | Entry thread Length | Max Outer Diameter | Max Length | Gland Seal Range | | | | | | | Armour Acceptance Range | Shroud Size |
|---|---|---|---|---|---|---|---|---|---|---|---|---|---|
| | | | | | Cable Inner Sheath [C] | | | Cable Outer Sheath [D] | | | | | |
| | | | | | | | | Standard [f] = 2 | | Reduced [f] = 1 | | | |
| [ggg] | [a] | [B] | [A] | | X | Y | Z | Min | Max | Min | Max | | |
| G16 | M20 | 16 | 28.0 | 72.0 | 7 | 9.0 | 11.7 | 9.0 | 13.5 | 6.7 | 10.3 | 0.15 - 1.25 | L24 |
| G20S | M20 | 16 | 28.0 | 72.0 | 8 | 10.4 | 11.7 | 11.5 | 16.0 | 9.4 | 12.5 | 0.15 - 1.25 | L24 |
| G20 | M20 | 16 | 33.0 | 73.0 | 14 | 12.5 | 14.0 | 15.5 | 21.1 | 12.0 | 17.6 | 0.15 - 1.25 | EL30 |
| G25 | M25 | 16 | 41.4 | 83.0 | 25 | 17.8 | 20.0 | 20.3 | 27.4 | 16.8 | 23.9 | 0.15 - 1.60 | EL38 |
| G32 | M32 | 16 | 50.6 | 103.0 | 50 | 23.5 | 26.3 | 26.7 | 34.0 | 23.2 | 30.5 | 0.15 - 2.00 | EL46 |
| G40 | M40 | 16 | 60.5 | 105.0 | 80 | 28.8 | 32.2 | 33.0 | 40.6 | 28.6 | 36.2 | 0.20 - 2.00 | EL55 |
| G50S | M50 | 16 | 71.5 | 115.0 | 100 | 34.2 | 38.2 | 39.4 | 46.7 | 34.8 | 42.4 | 0.30 - 2.50 | EL65 |
| G50 | M50 | 16 | 71.5 | 115.0 | 100 | 39.4 | 44.1 | 45.7 | 53.2 | 41.1 | 48.5 | 0.30 - 2.50 | EL65 |
| G63S | M63 | 19 | 88.0 | 115.0 | 120 | 44.8 | 50.1 | 52.1 | 59.5 | 47.5 | 54.8 | 0.30 - 2.50 | EL80 |
| G63 | M63 | 19 | 88.0 | 115.0 | 120 | 50.0 | 56.0 | 58.4 | 65.8 | 53.8 | 61.2 | 0.30 - 2.50 | EL80 |
| G75S | M75 | 19 | 99.0 | 122.0 | 140 | 55.4 | 62.0 | 64.8 | 72.2 | 60.2 | 68.0 | 0.30 - 2.50 | EL90 |
| G75 | M75 | 19 | 99.0 | 122.0 | 140 | 60.8 | 68.0 | 71.1 | 78.0 | 66.5 | 73.4 | 0.30 - 2.50 | EL90 |

Dimensions in mm

### Important Notes

- The gland size does not necessarily equate to the entry thread size.
- In some cases several gland sizes can be chosen due to overlaping inner as well as outer cable diameters. Due to the wide range of armoured cables available, it is necessary to select the correct clamping range. This is achieved by taking the inner and outer clamping range values to determine the best fit (as close as possible to the Min/Max values average).
- X = Maximum numbers of cores
- Y = Maximum over cores
- Z = Maximum inner sheath
- All cable glands have a 1.5 mm pitch.
- For Flameproof Ex d applications the female thread into which the gland is to be fitted must achieve an engagement of at least 5 full threads in compliance with clause 5.3 of EN/IEC 60079-1.
- Where KUB glands are fitted into non-metallic Increased Safety Ex e enclosures they must be included within the earth circuit of the system
- Fully assembly instructions are supplied with the glands. The instructions must be read prior to installation and adhered to in full.
- When the gland is used to terminate un-armoured cables, the gland is suitable only for fixed installation

# Selection Guide Klippon® Cable Glands

**Purpose: Generation of the article description**

By selecting the suitable cable gland different factors have to be considered, such as
- The environment of the application
- The conditions inside the enclosure
- The construction of the cable

By using the Selection Guide Klippon® Cable Glands the article description will be generated following the step by step process to create the 7 character order key. From this the order number can be identified.

**The order key consists out of the following attributes:**

| Order key | [Type] | [a] | [b] | [c] | [d] | [e] | [f] | [ggg] |
|---|---|---|---|---|---|---|---|---|
| Example Article Description | KDSU | M20 | B | S | 0 | SC | 1 | G16 |

Meaning

| | | |
|---|---|---|
| [Type] | = | Gland type (KDSU, KDSW, KDSX, KSG, KUB) |
| [a] | = | Entry thread (M20-M75) |
| [b] | = | Material (B = brass) |
| [c] | = | Seal material (S=Silicone, N=Neoprene) |
| [d] | = | Continuity for lead sheath (L = yes, 0 = no) |
| [e] | = | Plating (SC = self-coloured, NI = nickel-plated |
| [f] | = | Cable outer sheath (1 = Reduced, 2 = Standard) |
| [ggg] | = | Gland size (G16-G75) |

**Application example**

Within an Ex d application on an Off-Shore platform a suitable cable gland for the termination into an enclosure is required.
Following details about the application are given:

- The enclosure will be used for the control of a motor circuit breaker
- The enclosure has a volume of 1.3 $dm^3$ and is installed outdoor.
- The application is in the field, a place in which an explosive atmosphere is likely to occur in normal operation, occasionally (Zone 1)
- The surrounding atmosphere of the enclosure consists Ethylene (gas group IIB)
- The enclosure operates in a temperature range of -25 °C to +45 °C
- The armour of the cable is unknown, no lead sheathed cable
- The cable outer sheath diameter is 10 mm
- The cable inner sheath diameter is 8 mm

Based on the information in the above shown example case the article description will be determined on the following pages.

## 1. Selection of the cable gland type [type] and continuity for lead sheath [d]

| Order key | [Type] | [a] | [b] | [c] | [d] | [e] | [f] | [ggg] |
|---|---|---|---|---|---|---|---|---|
| Example Article Description | | | | | | | | |

## 1a) Selection of the cable gland type in regard to the ignition protection type

| [Type] | Ignition Protecion Type |
|---|---|
| KDSU | Ex d / Ex e |
| KDSW | Ex d / Ex e |
| KDSX | Ex d / Ex e |
| KSG | Ex d / Ex e |
| KUB | Ex d |

Because it is an Ex d application all cable gland types (marked in blue) can come into consideration.
For Ex d applications the following questionnaire according to the IEC 60079-14 standard has to be passed to find out if a barrier gland ([Type]=KUB) or if a cable gland with a sealing ring ([Type]=KDSU,KDSW,KDSX) has to be used.

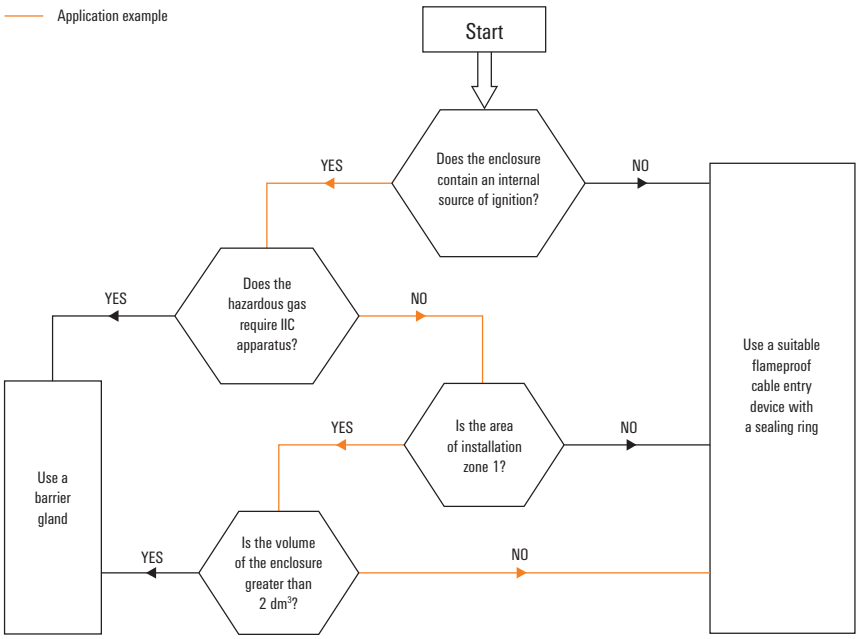


By passing this questionnaire with the given information of the example case the orange marked way has to be followed and the result is that a cable gland with sealing ring has to be used. Consequently the blue marked cable gland types below can come into consideration.

| Gland type | Type of sealing |
|---|---|
| KDSU | Sealing ring |
| KDSW | Sealing ring |
| KDSX | Sealing ring |
| KSG | Sealing ring |
| KUB | Compound |

### 1b) Selection of the cable gland type in regard to the continuity for lead sheath

| [Type] | [d] | Continuity for lead sheath |
|---|---|---|
| KDSU | 0 | No |
| KDSW | L / 0 | Yes |
| KDSX | 0 | No |
| KSG | 0 | No |
| KUB | 0 | No |

In the example case a cable without lead sheath is to be terminated, therefore the option to clamp a lead sheathed cable is not needed.
Consequently is

**[d] = 0**

All four gland types marked in blue can be used.

### 1c) Selection of the cable gland type in regard to the type of armour

| [Type] | Armour |
|---|---|
| KDSU | Universal |
| KDSW | Steel wire, steel tape |
| KDSX | Braided |
| KSG | No armour |
| KUB | Universal |

Because the type of armour of the cable is unknown, the cable gland type KDSU has to be selected.
Consequently is

**[Type] = KDSU**

The generated information has to be filled into the order key below:

| | | | | | | | | |
|---|---|---|---|---|---|---|---|---|
| Order key | **[Type]** | [a] | [b] | [c] | **[d]** | [e] | [f] | [ggg] |
| Example Article Description | **KDSU** | | | | **0** | | | |

## 2. Selection of the material [b], the sealing material [c] and the plating [e] of the cable gland

| Order key | [Type] | [a] | [b] | [c] | [d] | [e] | [f] | [ggg] |
|---|---|---|---|---|---|---|---|---|
| Example Article Description | KDSU | | | | O | | | |

### 2a) Selection of the material [b]

All cable gland types are made from brass "b". Other materials can also be provided upon request.
Consequently is
[b] = B

### 2b) Selection of the sealing material [c] based on the required temperature range

The cable glands can be ordered with either a neoprene seal "N" or a silicone seal "S".
Glands with a neoprene seal can be used in a temperature range from -20 °C to +85 °C, whereas glands with silicone seal maintain a temperature range from -60 °C to +180 °C. (KUB glands are certified to a temperature of -60 °C to +85 °C).

| [Type] | [c] | Seal material |
|---|---|---|
| KDSU | N,S | Neoprene, Silicone |
| KDSW | N,S | Neoprene (with continuity for lead sheath), Silicone |
| KDSX | S | Silicone |
| KSG | N,S | Neoprene, Silicone |
| KUB | N | Silicone (-60 °C to +85 °C) |

Because the enclosure in the example case operates in a temperature range of -25 °C to +45 °C, a cable gland with a silicone seal has to be used.
Consequently is
[c] = „S" (Silicone)

### 2c) Selection of the plating [e]

All cable glands can be provided either with nickel plated surface "NI" or with self-coloured surface "SC".

In the example case the enclosure is used outdoor, therefore it can come into contact with water in form of rain, so that a cable gland with nickel plated surface as protection against corrosion and wear has to be selected. Consequently is [e] = „NI"

The generated information has to be filled into the order key below:

| Order key | [Type] | [a] | [b] | [c] | [d] | [e] | [f] | [ggg] |
|---|---|---|---|---|---|---|---|---|
| Example Article Description | KDSU | | B | S | O | NI | | |

## 3. Selection of the entry thread [a], the cable outer sheath variant [f] and the gland size [ggg]

| Order key | [Type] | [a] | [b] | [c] | [d] | [e] | [f] | [ggg] |
|---|---|---|---|---|---|---|---|---|
| Example Article Description | KDSU | | B | S | O | NI | | |

The suitable gland size [ggg] will be selected based on the inner and outer sheath diameters of the cable. Thereby the entry thread size [a] and the cable outer sheath variant [f] result.

**In the example case the following diameters are given:**

Cable Outer Sheath: 10 mm (By looking into the below shown dimensions chart of the KDSU the orange marked clamping ranges (Cable Outer Sheath [D]) can be selected).
Cable Inner Sheath: 8 mm (By looking into the below shown dimensions chart of the KDSU the orange marked clamping ranges (Cable Inner Sheath [C]) can be selected).

**Dimensions**

| Gland Size | Entry thread | Entry thread Length | Max Outer Diameter | Max Length | Gland Seal Range | | | | | | Armour Acceptance Range | Shroud Size |
|---|---|---|---|---|---|---|---|---|---|---|---|---|
| | | | | | Cable Inner Sheath [C] | | Cable Outer Sheath [D] | | | | | |
| | | | | | | | Standard [f]=2 | | Reduced [f]=1 | | | |
| [ggg] | | [B] | [A] | | Min | Max | Min | Max | Min | Max | | |
| G16 | M20 | 16 | 28.0 | 78.0 | 3.4 | 8.4 | 9.0 | 13.5 | 6.7 | 10.3 | 0.15 - 1.25 | L24 |
| G20S | M20 | 16 | 28.0 | 78.0 | 7.2 | 11.7 | 11.5 | 16.0 | 9.4 | 12.5 | 0.15 - 1.25 | L24 |
| G20 | M20 | 16 | 33.0 | 78.0 | 9.4 | 14.0 | 15.5 | 21.1 | 12.0 | 17.6 | 0.15 - 1.25 | EL30 |
| G25 | M25 | 16 | 41.4 | 90.0 | 13.5 | 20.0 | 20.3 | 27.4 | 16.8 | 23.9 | 0.15 - 1.60 | EL38 |
| G32 | M32 | 16 | 50.6 | 105.0 | 19.5 | 26.3 | 26.7 | 34.0 | 23.2 | 30.5 | 0.15 - 2.00 | EL46 |
| G40 | M40 | 16 | 60.5 | 113.0 | 23.0 | 32.2 | 33.0 | 40.6 | 28.6 | 36.2 | 0.20 - 2.00 | EL55 |
| G50S | M50 | 16 | 71.5 | 125.0 | 28.1 | 38.2 | 39.4 | 46.7 | 34.8 | 42.4 | 0.30 - 2.50 | EL65 |
| G50 | M50 | 16 | 71.5 | 125.0 | 33.1 | 44.1 | 45.7 | 53.2 | 41.1 | 48.5 | 0.30 - 2.50 | EL65 |
| G63S | M63 | 19 | 88.0 | 125.0 | 39.2 | 50.1 | 52.1 | 59.5 | 47.5 | 54.8 | 0.30 - 2.50 | EL80 |
| G63 | M63 | 19 | 88.0 | 125.0 | 46.7 | 56.0 | 58.4 | 65.8 | 53.8 | 61.2 | 0.30 - 2.50 | EL80 |
| G75S | M75 | 19 | 99.0 | 131.0 | 52.1 | 62.0 | 64.8 | 72.2 | 60.2 | 68.0 | 0.30 - 2.50 | EL90 |
| G75 | M75 | 19 | 99.0 | 131.0 | 58.0 | 68.0 | 71.1 | 78.0 | 66.5 | 73.4 | 0.30 - 2.50 | EL90 |
| | | All dimensions in mm | | | | | | | | | | |

By the selection of the inner [C] resp. outer [D] clamping range, a range should be used where the diameter of the cable outer and inner sheath are as near as possible to the average of the Min/Max Values. In doing so, the reduced cable outer sheath with the gland size G20S and the entry thread of M20 has to be selected.

Consequently is
**[f]=1**
**[ggg]=G20S**
**[a]=M20**

The generated information has to be filled into the order key below:

| | | | | | | | | |
|---|---|---|---|---|---|---|---|---|
| Order key | [Type] | [a] | [b] | [c] | [d] | [e] | [f] | [ggg] |
| Article description | KDSU | M20 | B | S | 0 | NI | 1 | G20S |

Resulting from the complete article description the relating order number (brown marked) can be determined.

**Extract from table KDSU "Nickel-plated brass gland with silicone sealing" on page C.33**

| Order No. | Description | [Type] | [a] | [b] | [c] | [d] | [e] | [f] | [ggg] | Qty. |
|---|---|---|---|---|---|---|---|---|---|---|
| 0930001221 | KDSU M20 BS 0 NI 1 G16 | KDSU | M20 | B | S | 0 | NI | 1 | G16 | 20 |
| 0930001222 | KDSU M20 BS 0 NI 2 G16 | KDSU | M20 | B | S | 0 | NI | 2 | G16 | 20 |
| 0930011223 | KDSU M20 BS 0 NI 1 G20S | KDSU | M20 | B | S | 0 | NI | 1 | G20S | 20 |
| 0930011224 | KDSU M20 BS 0 NI 2 G20S | KDSU | M20 | B | S | 0 | NI | 2 | G20S | 20 |
| 0930021221 | KDSU M20 BS 0 NI 1 G20 | KDSU | M20 | B | S | 0 | NI | 1 | G20 | 20 |
| ... | ... | ... | ... | ... | ... | ... | ... | ... | ... | ... |

## Klippon® cable glands - Brass - Ex e, Ex d, IP 68 for armoured and non-armoured cables

All-purpose cable gland for cables and lines with single-wire armouring, metal-foil armouring and braided armouring. Non-armoured cables and lines can also be connected.

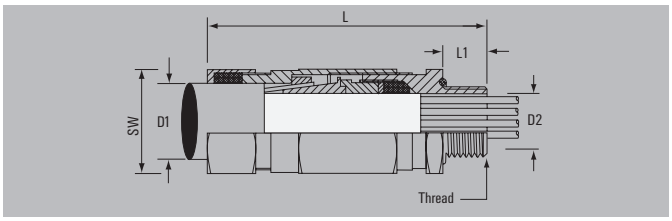


## Technical data

| | |
|---|---|
| Material | Brass |
| O-Ring / Seal insert | NBR / CR |
| Temperature range | -20 °C...85 °C |
| Degree of protection | IP 68 - 2.5 bar |
| Water depth | 25 m (30 Min.) |
| Type of armouring | Single-wire armouring, Metal foil armouring, Braided armouring |
| Approval | ATEX II 2 GD, Ex d IIC / Ex e II / Ex tD A21 IP68, IECEx Ex d IIC / Ex e II |

**Note**

## Ordering data

| Typ | Thread | D1 outer cable Ø | D2 inner cable Ø | Cable armour | L/L1 | SW | MODR | SUHB | Qty. | Order No. |
|---|---|---|---|---|---|---|---|---|---|---|
| **metric, brass** | | | | | | | | | | |
| KDSU M20 BN 0 SC 1 G16 | M 20 / 1.5 | 6.70-10.30 | 3.40-8.40 | 0.15-1.25 | 78 / 16 | 24 | 32.5 | L24 | 20 | **1076120000** |
| KDSU M20 BN 0 SC 2 G16 | M 20 / 1.5 | 9.00-13.50 | 3.40-8.40 | 0.15-1.25 | 78 / 16 | 24 | 32.5 | L24 | 20 | **1909260000** |
| KDSU M20 BN 0 SC 1 G20S | M 20 / 1.5 | 9.40-12.50 | 7.20-11.70 | 0.15-1.25 | 78 / 16 | 24 | 32.5 | L24 | 20 | **1076130000** |
| KDSU M20 BN 0 SC 2 G20S | M 20 / 1.5 | 11.50-16.00 | 7.20-11.70 | 0.15-1.25 | 78 / 16 | 24 | 32.5 | L24 | 20 | **1909290000** |
| KDSU M20 BN 0 SC 1 G20 | M 20 / 1.5 | 12.00-17.60 | 9.40-14.00 | 0.15-1.25 | 78 / 16 | 30 | 32.5 | EL30 | 20 | **1076140000** |
| KDSU M20 BN 0 SC 2 G20 | M 20 / 1.5 | 15.50-21.10 | 9.40-14.00 | 0.15-1.25 | 78 / 16 | 30 | 32.5 | EL30 | 20 | **1909300000** |
| KDSU M25 BN 0 SC 1 G25 | M 25 / 1.5 | 16.80-23.90 | 13.50-20.00 | 0.15-1.6 | 90 / 16 | 38 | 50 | EL38 | 20 | **1076150000** |
| KDSU M25 BN 0 SC 2 G25 | M 25 / 1.5 | 20.30-27.40 | 13.50-20.00 | 0.15-1.6 | 90 / 16 | 38 | 50 | EL38 | 20 | **1909310000** |
| KDSU M32 BN 0 SC 1 G32 | M 32 / 1.5 | 23.20-30.50 | 19.50-26.30 | 0.15-2 | 105 / 16 | 46 | 80 | EL46 | 10 | **1076160000** |
| KDSU M32 BN 0 SC 2 G32 | M 32 / 1.5 | 26.70-34.00 | 19.50-26.30 | 0.15-2 | 105 / 16 | 46 | 80 | EL46 | 10 | **1909320000** |
| KDSU M40 BN 0 SC 1 G40 | M 40 / 1.5 | 28.60-36.20 | 23.00-32.20 | 0.2-2 | 113 / 16 | 55 | 80 | EL55 | 10 | **1076170000** |
| KDSU M40 BN 0 SC 2 G40 | M 40 / 1.5 | 33.00-40.60 | 23.00-32.20 | 0.2-2 | 113 / 16 | 55 | 80 | EL55 | 10 | **1909330000** |
| KDSU M50 BN 0 SC 1 G50S | M 50 / 1.5 | 34.80-42.40 | 28.10-38.20 | 0.3-2.5 | 125 / 16 | 65 | 100 | EL65 | 1 | **1076180000** |
| KDSU M50 BN 0 SC 2 G50S | M 50 / 1.5 | 39.40-46.70 | 28.10-38.20 | 0.3-2.5 | 125 / 16 | 65 | 100 | EL65 | 1 | **1909340000** |
| KDSU M50 BN 0 SC 1 G50 | M 50 / 1.5 | 41.10-48.50 | 33.10-44.10 | 0.3-2.5 | 125 / 16 | 65 | 100 | EL65 | 1 | **1076190000** |
| KDSU M50 BN 0 SC 2 G50 | M 50 / 1.5 | 45.70-53.20 | 33.10-44.10 | 0.3-2.5 | 125 / 16 | 65 | 100 | EL65 | 1 | **1909350000** |
| KDSU M63 BN 0 SC 1 G63S | M 63 / 1.5 | 47.50-54.80 | 39.20-50.10 | 0.3-2.5 | 125 / 19 | 80 | 160 | EL80 | 1 | **1076200000** |
| KDSU M63 BN 0 SC 2 G63S | M 63 / 1.5 | 52.10-59.50 | 39.20-50.10 | 0.3-2.5 | 125 / 19 | 80 | 160 | EL80 | 1 | **1909360000** |
| KDSU M63 BN 0 SC 1 G63 | M 63 / 1.5 | 53.80-61.20 | 46.70-56.00 | 0.3-2.5 | 125 / 19 | 80 | 160 | EL80 | 1 | **1076210000** |
| KDSU M63 BN 0 SC 2 G63 | M 63 / 1.5 | 58.40-65.80 | 46.70-56.00 | 0.3-2.5 | 125 / 19 | 80 | 160 | EL80 | 1 | **1909370000** |
| KDSU M75 BN 0 SC 1 G75S | M 75 / 1.5 | 60.20-68.00 | 52.10-62.00 | 0.3-2.5 | 131 / 19 | 90 | 200 | EL90 | 1 | **1076220000** |
| KDSU M75 BN 0 SC 2 G75S | M 75 / 1.5 | 64.80-72.20 | 52.10-62.00 | 0.3-2.5 | 131 / 19 | 90 | 200 | EL90 | 1 | **1076230000** |
| KDSU M75 BN 0 SC 1 G75 | M 75 / 1.5 | 66.50-73.40 | 58.00-68.00 | 0.3-2.5 | 131 / 19 | 90 | 200 | EL90 | 1 | **1076240000** |
| KDSU M75 BN 0 SC 2 G75 | M 75 / 1.5 | 71.10-78.00 | 58.00-68.00 | 0.3-2.5 | 131 / 19 | 90 | 200 | EL90 | 1 | **1076260000** |

**Note**

- All cable glands have a thread pitch of 1.5 mm.
- In the case of Ex d applications, the inner threads used for cable glands must meet the requirements of section 5.3 of EN/IEC 60079-1. In the screwed in position, at least 5 threads must be engaged.
- If the cable glands are installed in non-metallic Ex e connection equipment, these must be connected to the protective earth of the system.
- The connection cable must be laid securely and inflexibly to rule out tensile stress.

## Klippon® cable glands - Brass - Ex e, Ex d, IP 68 for armoured and non-armoured cables

All-purpose cable gland for cables and lines with single-wire armouring, metal-foil armouring and braided armouring. Non-armoured cables and lines can also be connected.

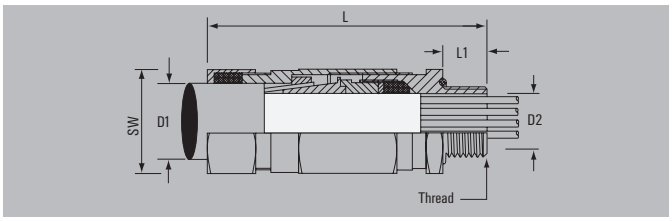


### Technical data

| | |
|---|---|
| Material | Brass, nickel-plated |
| O-Ring / Seal insert | NBR / CR |
| Temperature range | -20 °C...85 °C |
| Degree of protection | IP 68 - 2.5 bar |
| Water depth | 25 m (30 Min.) |
| Type of armouring | Single-wire armouring, Metal foil armouring, Braided armouring |
| Approval | ATEX II 2 GD, Ex d IIC / Ex e II / Ex tD A21 IP68, IECEx Ex d IIC / Ex e II |

**Note**

### Ordering data

| Typ | Thread | D1 outer cable Ø | D2 inner cable Ø | Cable armour | L/L1 | SW | MODR | SUHB | Qty. | Order No. |
|---|---|---|---|---|---|---|---|---|---|---|
| **metric, nickel-plated brass** | | | | | | | | | | |
| KDSU M20 BN O NI 1 G16 | M 20 / 1.5 | 6.70-10.30 | 3.40-8.40 | 0.15-1.25 | 78 / 16 | 24 | 32.5 | L24 | 20 | **1083280000** |
| KDSU M20 BN O NI 2 G16 | M 20 / 1.5 | 9.00-13.50 | 3.40-8.40 | 0.15-1.25 | 78 / 16 | 24 | 32.5 | L24 | 20 | **1911380000** |
| KDSU M20 BN O NI 1 G20S | M 20 / 1.5 | 9.40-12.50 | 7.20-11.70 | 0.15-1.25 | 78 / 16 | 24 | 32.5 | L24 | 20 | **1083290000** |
| KDSU M20 BN O NI 2 G20S | M 20 / 1.5 | 11.50-16.00 | 7.20-11.70 | 0.15-1.25 | 78 / 16 | 24 | 32.5 | L24 | 20 | **1911390000** |
| KDSU M20 BN O NI 1 G20 | M 20 / 1.5 | 12.00-17.60 | 9.40-14.00 | 0.15-1.25 | 78 / 16 | 30 | 32.5 | EL30 | 20 | **1083320000** |
| KDSU M20 BN O NI 2 G20 | M 20 / 1.5 | 15.50-21.10 | 9.40-14.00 | 0.15-1.25 | 78 / 16 | 30 | 32.5 | EL30 | 20 | **1911400000** |
| KDSU M25 BN O NI 1 G25 | M 25 / 1.5 | 16.80-23.90 | 13.50-20.00 | 0.15-1.6 | 90 / 16 | 38 | 50 | EL38 | 20 | **1083330000** |
| KDSU M25 BN O NI 2 G25 | M 25 / 1.5 | 20.30-27.40 | 13.50-20.00 | 0.15-1.6 | 90 / 16 | 38 | 50 | EL38 | 20 | **1911420000** |
| KDSU M32 BN O NI 1 G32 | M 32 / 1.5 | 23.20-30.50 | 19.50-26.30 | 0.15-2 | 105 / 16 | 46 | 80 | EL46 | 10 | **1083340000** |
| KDSU M32 BN O NI 2 G32 | M 32 / 1.5 | 26.70-34.00 | 19.50-26.30 | 0.15-2 | 105 / 16 | 46 | 80 | EL46 | 10 | **1911430000** |
| KDSU M40 BN O NI 1 G40 | M 40 / 1.5 | 28.60-36.20 | 23.00-32.20 | 0.2-2 | 113 / 16 | 55 | 80 | EL55 | 10 | **1083350000** |
| KDSU M40 BN O NI 2 G40 | M 40 / 1.5 | 33.00-40.60 | 23.00-32.20 | 0.2-2 | 113 / 16 | 55 | 80 | EL55 | 10 | **1911440000** |
| KDSU M50 BN O NI 1 G50 | M 50 / 1.5 | 41.10-48.50 | 33.10-44.10 | 0.3-2.5 | 125 / 16 | 65 | 100 | EL65 | 1 | **1083370000** |
| KDSU M50 BN O NI 2 G50 | M 50 / 1.5 | 45.70-53.20 | 33.10-44.10 | 0.3-2.5 | 125 / 16 | 65 | 100 | EL65 | 1 | **1911460000** |
| KDSU M50 BN O NI 1 G50S | M 50 / 1.5 | 34.80-42.40 | 28.10-38.20 | 0.3-2.5 | 125 / 16 | 65 | 100 | EL65 | 1 | **1083360000** |
| KDSU M50 BN O NI 2 G50S | M 50 / 1.5 | 39.40-46.70 | 28.10-38.20 | 0.3-2.5 | 125 / 16 | 65 | 100 | EL65 | 1 | **1911450000** |
| KDSU M63 BN O NI 1 G63S | M 63 / 1.5 | 47.50-54.80 | 39.20-50.10 | 0.3-2.5 | 125 / 19 | 80 | 160 | EL80 | 1 | **1083380000** |
| KDSU M63 BN O NI 2 G63S | M 63 / 1.5 | 52.10-59.50 | 39.20-50.10 | 0.3-2.5 | 125 / 19 | 80 | 160 | EL80 | 1 | **1911480000** |
| KDSU M63 BN O NI 1 G63 | M 50 / 1.5 | 53.80-61.20 | 46.70-56.00 | 0.3-2.5 | 125 / 16 | 80 | 160 | EL80 | 1 | **1083390000** |
| KDSU M63 BN O NI 2 G63 | M 63 / 1.5 | 58.40-65.80 | 46.70-56.00 | 0.3-2.5 | 125 / 19 | 80 | 160 | EL80 | 1 | **1911490000** |
| KDSU M75 BN O NI 1 G75S | M 75 / 1.5 | 60.20-68.00 | 52.10-62.00 | 0.3-2.5 | 131 / 19 | 90 | 200 | EL90 | 1 | **1083400000** |
| KDSU M75 BN O NI 2 G75S | M 75 / 1.5 | 64.80-72.20 | 52.10-62.00 | 0.3-2.5 | 131 / 19 | 90 | 200 | EL90 | 1 | **1083410000** |
| KDSU M75 BN O NI 1 G75 | M 75 / 1.5 | 66.50-73.40 | 58.00-68.00 | 0.3-2.5 | 131 / 19 | 90 | 200 | EL90 | 1 | **1083420000** |
| KDSU M75 BN O NI 2 G75 | M 75 / 1.5 | 71.10-78.00 | 58.00-68.00 | 0.3-2.5 | 131 / 19 | 90 | 200 | EL90 | 1 | **1083430000** |

**Note**

- All cable glands have a thread pitch of 1.5 mm.
- In the case of Ex d applications, the inner threads used for cable glands must meet the requirements of section 5.3 of EN/IEC 60079-1. In the screwed in position, at least 5 threads must be engaged.
- If the cable glands are installed in non-metallic Ex e connection equipment, these must be connected to the protective earth of the system.
- The connection cable must be laid securely and inflexibly to rule out tensile stress.

## Klippon® cable glands - Brass - Ex e, Ex d, IP 68 for armoured and non-armoured cables

All-purpose cable gland for cables and lines with single-wire armouring, metal-foil armouring and braided armouring. Non-armoured cables and lines can also be connected.

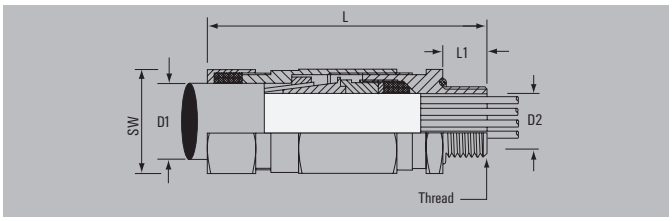


### Technical data

| | |
|---|---|
| Material | Brass |
| O-Ring / Seal insert | Silicone / Silicone |
| Temperature range | -60 °C...180 °C |
| Degree of protection | IP 68 - 2.5 bar |
| Water depth | 25 m (30 Min.) |
| Type of armouring | Single-wire armouring, Metal foil armouring, Braided armouring |
| Approval | ATEX II 2 GD, Ex d IIC / Ex e II / Ex tD A21 IP68, IECEx Ex d IIC / Ex e II |

**Note**

### Ordering data

| Typ | Thread | D1 outer cable Ø | D2 inner cable Ø | Cable armour | L/L1 | SW | MODR | SUHB | Qty. | Order No. |
|---|---|---|---|---|---|---|---|---|---|---|
| **metric, brass** | | | | | | | | | | |
| KDSU M20 BS 0 SC 1 G16 | M 20 / 1.5 | 6.70-10.30 | 3.40-8.40 | 0.15-1.25 | 78 / 16 | 24 | 32.5 | L24 | 20 | **0930001211** |
| KDSU M20 BS 0 SC 2 G16 | M 20 / 1.5 | 9.00-13.50 | 3.40-8.40 | 0.15-1.25 | 78 / 16 | 24 | 32.5 | L24 | 20 | **0930001212** |
| KDSU M20 BS 0 SC 1 G20S | M 20 / 1.5 | 9.40-12.50 | 7.20-11.70 | 0.15-1.25 | 78 / 16 | 24 | 32.5 | L24 | 20 | **0930011213** |
| KDSU M20 BS 0 SC 2 G20S | M 20 / 1.5 | 11.50-16.00 | 7.20-11.70 | 0.15-1.25 | 78 / 16 | 24 | 32.5 | L24 | 20 | **0930011214** |
| KDSU M20 BS 0 SC 1 G20 | M 20 / 1.5 | 12.00-17.60 | 9.40-14.00 | 0.15-1.25 | 78 / 16 | 30 | 32.5 | EL30 | 20 | **0930021211** |
| KDSU M20 BS 0 SC 2 G20 | M 20 / 1.5 | 15.50-21.10 | 9.40-14.00 | 0.15-1.25 | 78 / 16 | 30 | 32.5 | EL30 | 20 | **0930021212** |
| KDSU M25 BS 0 SC 1 G25 | M 25 / 1.5 | 16.80-23.90 | 13.50-20.00 | 0.15-1.6 | 90 / 16 | 38 | 50 | EL38 | 20 | **0930031211** |
| KDSU M25 BS 0 SC 2 G25 | M 25 / 1.5 | 20.30-27.40 | 13.50-20.00 | 0.15-1.6 | 90 / 16 | 38 | 50 | EL38 | 20 | **0930031212** |
| KDSU M32 BS 0 SC 1 G32 | M 32 / 1.5 | 23.20-30.50 | 19.50-26.30 | 0.15-2 | 105 / 16 | 46 | 80 | EL46 | 10 | **0930041211** |
| KDSU M32 BS 0 SC 2 G32 | M 32 / 1.5 | 26.70-34.00 | 19.50-26.30 | 0.15-2 | 105 / 16 | 46 | 80 | EL46 | 10 | **0930041212** |
| KDSU M40 BS 0 SC 1 G40 | M 40 / 1.5 | 28.60-36.20 | 23.00-32.20 | 0.2-2 | 113 / 16 | 55 | 80 | EL55 | 10 | **1136870000** |
| KDSU M40 BS 0 SC 2 G40 | M 40 / 1.5 | 33.00-40.60 | 23.00-32.20 | 0.2-2 | 113 / 16 | 55 | 80 | EL55 | 10 | **0930051212** |
| KDSU M50 BS 0 SC 1 G50S | M 50 / 1.5 | 34.80-42.20 | 28.10-38.20 | 0.3-2.5 | 125 / 16 | 65 | 100 | EL65 | 1 | **0930061213** |
| KDSU M50 BS 0 SC 2 G50S | M 50 / 1.5 | 39.40-46.70 | 28.10-38.20 | 0.3-2.5 | 125 / 16 | 65 | 100 | EL65 | 1 | **1136880000** |
| KDSU M50 BS 0 SC 1 G50 | M 50 / 1.5 | 41.10-48.50 | 33.10-44.10 | 0.3-2.5 | 125 / 16 | 65 | 100 | EL65 | 1 | **1136890000** |
| KDSU M50 BS 0 SC 2 G50 | M 50 / 1.5 | 45.70-53.20 | 33.10-44.10 | 0.3-2.5 | 125 / 16 | 65 | 100 | EL65 | 1 | **1136910000** |
| KDSU M63 BS 0 SC 1 G63S | M 63 / 1.5 | 47.50-54.80 | 39.20-50.10 | 0.3-2.5 | 125 / 19 | 80 | 160 | EL80 | 1 | **1136920000** |
| KDSU M63 BS 0 SC 2 G63S | M 63 / 1.5 | 52.10-59.50 | 39.20-50.10 | 0.3-2.5 | 125 / 19 | 80 | 160 | EL80 | 1 | **1136930000** |
| KDSU M63 BS 0 SC 1 G63 | M 63 / 1.5 | 53.80-61.20 | 46.70-56.00 | 0.3-2.5 | 125 / 19 | 80 | 160 | EL80 | 1 | **1136940000** |
| KDSU M63 BS 0 SC 2 G63 | M 63 / 1.5 | 58.40-65.80 | 46.70-56.00 | 0.3-2.5 | 125 / 19 | 80 | 160 | EL80 | 1 | **1136950000** |
| KDSU M75 BS 0 SC 1 G75 | M 75 / 1.5 | 66.50-73.40 | 58.00-68.00 | 0.3-2.5 | 131 / 19 | 90 | 200 | EL90 | 1 | **1136980000** |
| KDSU M75 BS 0 SC 2 G75 | M 75 / 1.5 | 71.10-78.00 | 58.00-68.00 | 0.3-2.5 | 131 / 19 | 90 | 200 | EL90 | 1 | **0930111212** |
| KDSU M75 BS 0 SC 1 G75S | M 75 / 1.5 | 60.20-68.00 | 52.10-62.00 | 0.3-2.5 | 131 / 19 | 90 | 200 | EL90 | 1 | **1136960000** |
| KDSU M75 BS 0 SC 2 G75S | M 75 / 1.5 | 64.80-72.20 | 52.10-62.00 | 0.3-2.5 | 131 / 19 | 90 | 200 | EL90 | 1 | **1136970000** |

**Note**

- All cable glands have a thread pitch of 1.5 mm.
- In the case of Ex d applications, the inner threads used for cable glands must meet the requirements of section 5.3 of EN/IEC 60079-1. In the screwed in position, at least 5 threads must be engaged.
- If the cable glands are installed in non-metallic Ex e connection equipment, these must be connected to the protective earth of the system.
- The connection cable must be laid securely and inflexibly to rule out tensile stress.

## Klippon® cable glands - Brass - Ex e, Ex d, IP 68 for armoured and non-armoured cables

All-purpose cable gland for cables and lines with single-wire armouring, metal-foil armouring and braided armouring. Non-armoured cables and lines can also be connected.

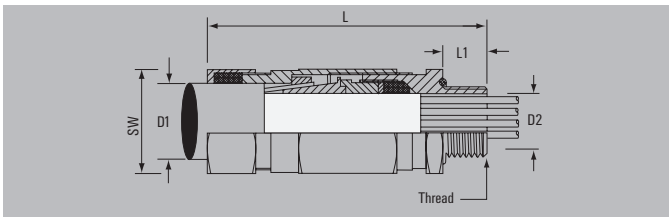


### Technical data

| | |
|---|---|
| Material | Brass, nickel-plated |
| O-Ring / Seal insert | Silicone / Silicone |
| Temperature range | -60 °C...180 °C |
| Degree of protection | IP 68 - 2.5 bar |
| Water depth | 25 m (30 Min.) |
| Type of armouring | Single-wire armouring, Metal foil armouring, Braided armouring |
| Approval | ATEX II 2 GD, Ex d IIC / Ex e II / Ex tD A21 IP68, IECEx Ex d IIC / Ex e II |

**Note**

### Ordering data

| Typ | Thread | D1 outer cable Ø | D2 inner cable Ø | Cable armour | L/L1 | SW | MODR | SUHB | Qty. | Order No. |
|---|---|---|---|---|---|---|---|---|---|---|
| **metric, nickel-plated brass** | | | | | | | | | | |
| KDSU M20 BS O NI 1 G16 | M 20 / 1.5 | 6.70-10.30 | 3.40-8.40 | 0.15-1.25 | 78 / 16 | 24 | 32.5 | L24 | 20 | **0930001221** |
| KDSU M20 BS O NI 2 G16 | M 20 / 1.5 | 9.00-13.50 | 3.40-8.40 | 0.15-1.25 | 78 / 16 | 24 | 32.5 | L24 | 20 | **0930001222** |
| KDSU M20 BS O NI 1 G20 | M 20 / 1.5 | 12.00-17.60 | 9.40-14.00 | 0.15-1.25 | 78 / 16 | 30 | 32.5 | EL30 | 20 | **0930021221** |
| KDSU M20 BS O NI 2 G20 | M 20 / 1.5 | 15.50-21.10 | 9.40-14.00 | 0.15-1.25 | 78 / 16 | 30 | 32.5 | EL30 | 20 | **0930021222** |
| KDSU M20 BS O NI 1 G20S | M 20 / 1.5 | 9.40-12.50 | 7.20-11.70 | 0.15-1.25 | 78 / 16 | 24 | 32.5 | L24 | 20 | **0930011223** |
| KDSU M20 BS O NI 2 G20S | M 20 / 1.5 | 11.50-16.00 | 7.20-11.70 | 0.15-1.25 | 78 / 16 | 24 | 32.5 | L24 | 20 | **0930011224** |
| KDSU M25 BS O NI 1 G25 | M 25 / 1.5 | 16.80-23.90 | 13.50-20.00 | 0.15-1.6 | 90 / 16 | 38 | 50 | EL38 | 20 | **0930031221** |
| KDSU M25 BS O NI 2 G25 | M 25 / 1.5 | 20.30-27.40 | 13.50-20.00 | 0.15-1.6 | 90 / 16 | 38 | 50 | EL38 | 20 | **0930031222** |
| KDSU M32 BS O NI 1 G32 | M 32 / 1.5 | 23.20-30.50 | 19.50-26.30 | 0.15-2 | 105 / 16 | 46 | 80 | EL46 | 10 | **0930041221** |
| KDSU M32 BS O NI 2 G32 | M 32 / 1.5 | 26.70-34.00 | 19.50-26.30 | 0.15-2 | 105 / 16 | 46 | 80 | EL46 | 10 | **0930041222** |
| KDSU M40 BS O NI 1 G40 | M 40 / 1.5 | 28.60-36.20 | 23.00-32.20 | 0.2-2 | 113 / 16 | 55 | 80 | EL55 | 10 | **1136990000** |
| KDSU M40 BS O NI 2 G40 | M 40 / 1.5 | 33.00-40.60 | 23.00-32.20 | 0.2-2 | 113 / 16 | 55 | 80 | EL55 | 10 | **0930051222** |
| KDSU M50 BS O NI 1 G50 | M 50 / 1.5 | 41.10-48.50 | 33.10-44.10 | 0.3-2.5 | 125 / 16 | 65 | 100 | EL65 | 1 | **1137010000** |
| KDSU M50 BS O NI 2 G50 | M 50 / 1.5 | 45.70-53.20 | 33.10-44.10 | 0.3-2.5 | 125 / 16 | 65 | 100 | EL65 | 1 | **1137020000** |
| KDSU M50 BS O NI 1 G50S | M 50 / 1.5 | 34.80-42.40 | 28.10-38.20 | 0.3-2.5 | 125 / 16 | 65 | 100 | EL65 | 1 | **1137000000** |
| KDSU M50 BS O NI 2 G50S | M 50 / 1.5 | 39.40-46.70 | 28.10-38.20 | 0.3-2.5 | 125 / 16 | 65 | 100 | EL65 | 1 | **0930061224** |
| KDSU M63 BS O NI 1 G63 | M 63 / 1.5 | 53.80-61.20 | 46.70-56.00 | 0.3-2.5 | 125 / 19 | 80 | 160 | EL80 | 1 | **1137050000** |
| KDSU M63 BS O NI 2 G63 | M 63 / 1.5 | 58.40-65.80 | 46.70-56.00 | 0.3-2.5 | 125 / 19 | 80 | 160 | EL80 | 1 | **0930091222** |
| KDSU M63 BS O NI 1 G63S | M 63 / 1.5 | 47.50-54.80 | 39.20-50.10 | 0.3-2.5 | 125 / 19 | 80 | 160 | EL80 | 1 | **1137030000** |
| KDSU M63 BS O NI 2 G63S | M 63 / 1.5 | 52.10-59.50 | 39.20-50.10 | 0.3-2.5 | 125 / 19 | 80 | 160 | EL80 | 1 | **1137040000** |
| KDSU M75 BS O NI 1 G75 | M 75 / 1.5 | 66.50-73.40 | 58.00-68.00 | 0.3-2.5 | 131 / 19 | 90 | 200 | EL90 | 1 | **1137080000** |
| KDSU M75 BS O NI 2 G75 | M 75 / 1.5 | 71.10-78.00 | 58.00-68.00 | 0.3-2.5 | 131 / 19 | 90 | 200 | EL90 | 1 | **1137090000** |
| KDSU M75 BS O NI 1 G75S | M 75 / 1.5 | 60.20-68.00 | 52.10-62.00 | 0.3-2.5 | 131 / 19 | 90 | 200 | EL90 | 1 | **1137060000** |
| KDSU M75 BS O NI 2 G75S | M 75 / 1.5 | 64.80-72.20 | 52.10-62.00 | 0.3-2.5 | 131 / 19 | 90 | 200 | EL90 | 1 | **1137070000** |

**Note**

- All cable glands have a thread pitch of 1.5 mm.
- In the case of Ex d applications, the inner threads used for cable glands must meet the requirements of section 5.3 of EN/IEC 60079-1. In the screwed in position, at least 5 threads must be engaged.
- If the cable glands are installed in non-metallic Ex e connection equipment, these must be connected to the protective earth of the system.
- The connection cable must be laid securely and inflexibly to rule out tensile stress.

## Klippon® cable glands - Brass - Ex e, Ex d, IP 66 / IP 68 for armoured cables

Cable gland for cables and lines with single-wire armouring.

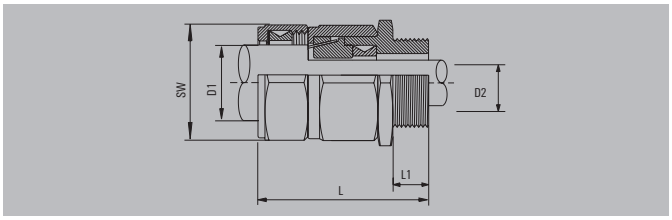


## Technical data

| | |
|---|---|
| Material | Brass |
| Seal insert | CR |
| Temperature range | -20 °C...85 °C |
| Protection degree | IP 54 |
| Protection degree with GWDR | IP 66, IP 68 - 2.5 bar |
| Water depth | 25 m (30 Min.) |
| Type of armouring | Single-wire armouring |
| Approval | ATEX II 2 GD, Ex d IIC / Ex e II / Ex tD A21 IP68, IECEx Ex d IIC / Ex e II |

**Note** IP protection without GWDR is IP 54. To achieve IP 66/68 protection, a nylon GWDR must be ordered separately.

## Ordering data

| Typ | Thread | D1 outer cable Ø | D2 inner cable Ø | Cable armour | L/L1 | SW | MODR | SUHB | Qty. | Order No. |
|---|---|---|---|---|---|---|---|---|---|---|
| **metric, brass** | | | | | | | | | | |
| KDSW M20 BN 0 SC 1 G16 | M 20 / 1.5 | 4.90-10.00 | 4.00-8.40 | 0.9 | 58 / 16 | 24 | 32.5 | L24 | 20 | **1074480000** |
| KDSW M20BN 0 SC 2 G16 | M 20 / 1.5 | 8.40-13.50 | 4.00-8.40 | 0.9 | 58 / 16 | 24 | 32.5 | L24 | 20 | **1074490000** |
| KDSW M20 BN 0 SC 1 G20S | M 20 / 1.5 | 9.40-12.50 | 8.00-11.70 | 0.9-1.25 | 58 / 16 | 30 | 32.5 | L24 | 20 | **1074500000** |
| KDSW M20 BN 0 SC 2 G20S | M 20 / 1.5 | 11.50-16.00 | 8.00-11.70 | 0.9-1.25 | 58 / 16 | 30 | 32.5 | L24 | 20 | **1074510000** |
| KDSW M20 BN 0 SC 1 G20 | M 20 / 1.5 | 12.00-17.60 | 6.70-14.00 | 0.9-1.25 | 58 / 16 | 24 | 32.5 | L30 | 20 | **1074520000** |
| KDSW M20 BN 0 SC 2 G20 | M 20 / 1.5 | 15.50-21.10 | 6.70-14.00 | 0.9-1.25 | 58 / 16 | 24 | 32.5 | L30 | 20 | **1074530000** |
| KDSW M25 BN 0 SC 1 G25 | M 25 / 1.5 | 16.80-23.90 | 13.00-20.00 | 1.25-1.6 | 58 / 16 | 38 | 47.5 | L38 | 20 | **1074540000** |
| KDSW M25 BN 0 SC 2 G25 | M 25 / 1.5 | 20.30-27.40 | 13.00-20.00 | 1.25-1.6 | 58 / 16 | 38 | 47.5 | L38 | 20 | **1074550000** |
| KDSW M32 BN 0 SC 1 G32 | M 32 / 1.5 | 23.20-30.50 | 19.00-26.30 | 1.6-2 | 65 / 16 | 46 | 55 | L46 | 10 | **1074570000** |
| KDSW M32 BN 0 SC 2 G32 | M 32 / 1.5 | 26.70-34.00 | 19.00-26.30 | 1.6-2 | 65 / 16 | 46 | 55 | L46 | 10 | **1074580000** |
| KDSW M40 BN 0 SC 1 G40 | M 40 / 1.5 | 28.60-36.20 | 25.00-32.20 | 1.6-2 | 72 / 16 | 55 | 65 | L55 | 10 | **1074590000** |
| KDSW M40 BN 0 SC 2 G40 | M 40 / 1.5 | 33.00-40.60 | 25.00-32.20 | 1.6-2 | 72 / 16 | 55 | 65 | L55 | 10 | **1074610000** |
| KDSW M50 BN 0 SC 1 G50S | M 50 / 1.5 | 34.80-42.40 | 31.50-38.20 | 2-2.5 | 73 / 16 | 65 | 80 | L65 | 1 | **1074620000** |
| KDSW M50 BN 0 SC 2 G50S | M 50 / 1.5 | 39.40-46.70 | 31.50-38.20 | 2-2.5 | 73 / 16 | 65 | 80 | L65 | 1 | **1074630000** |
| KDSW M50 BN 0 SC 1 G50 | M 50 / 1.5 | 41.10-48.50 | 36.50-44.10 | 2-2.5 | 73 / 16 | 65 | 80 | L65 | 1 | **1074640000** |
| KDSW M50 BN 0 SC 2 G50 | M 50 / 1.5 | 45.70-53.20 | 36.50-44.10 | 2-2.5 | 73 / 16 | 65 | 80 | L65 | 1 | **1074650000** |
| KDSW M63 BN 0 SC 1 G63S | M 63 / 1.5 | 47.50-54.80 | 42.50-50.10 | 2.5 | 76 / 19 | 80 | 95 | L80 | 1 | **1074670000** |
| KDSW M63 BN 0 SC 2 G63S | M 63 / 1.5 | 52.10-59.50 | 42.50-50.10 | 2.5 | 76 / 19 | 80 | 95 | L80 | 1 | **1074710000** |
| KDSW M63 BN 0 SC 1 G63 | M 63 / 1.5 | 53.80-61.20 | 49.50-56.00 | 2.5 | 76 / 19 | 80 | 95 | L80 | 1 | **1074730000** |
| KDSW M63 BN 0 SC 2 G63 | M 63 / 1.5 | 58.40-65.80 | 49.50-56.00 | 2.5 | 76 / 19 | 80 | 95 | L80 | 1 | **1074750000** |
| KDSW M75 BN 0 SC 1 G75S | M 75 / 1.5 | 60.20-68.00 | 54.50-62.00 | 2.5 | 82 / 19 | 90 | 110 | L90 | 1 | **1074770000** |
| KDSW M75 BN 0 SC 2 G75S | M 75 / 1.5 | 64.80-72.20 | 54.50-62.00 | 2.5 | 82 / 19 | 90 | 110 | L90 | 1 | **1074790000** |
| KDSW M75 BN 0 SC 1 G75 | M 75 / 1.5 | 66.50-73.40 | 60.50-68.00 | 2.5 | 82 / 19 | 90 | 110 | L90 | 1 | **1074820000** |
| KDSW M75 BN 0 SC 2 G75 | M 75 / 1.5 | 71.10-78.00 | 60.50-68.00 | 2.5 | 82 / 19 | 90 | 110 | L90 | 1 | **1074840000** |

**Note**
- All cable glands have a thread pitch of 1.5 mm.
- In the case of Ex d applications, the inner threads used for cable glands must meet the requirements of section 5.3 of EN/IEC 60079-1. In the screwed in position, at least 5 threads must be engaged.
- If the cable glands are installed in non-metallic Ex e connection equipment, these must be connected to the protective earth of the system.
- The connection cable must be laid securely and inflexibly to rule out tensile stress.

## Klippon® cable glands - Brass - Ex e, Ex d, IP 66 / IP 68 for armoured cables

Cable gland for cables and lines with single-wire armouring.

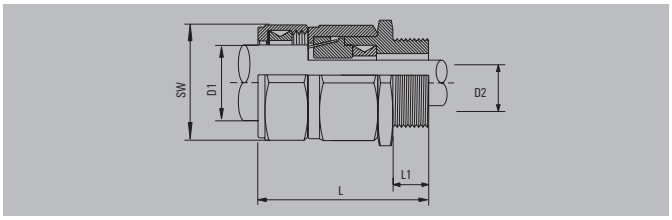


### Technical data

| | |
|---|---|
| Material | Brass, nickel-plated |
| Seal insert | CR |
| Temperature range | -20 °C...85 °C |
| Protection degree | IP 54 |
| Protection degree with GWDR | IP 66, IP 68 - 2.5 bar |
| Water depth | 25 m (30 Min.) |
| Type of armouring | Single-wire armouring |
| Approval | ATEX II 2 GD, Ex d IIC / Ex e II / Ex tD A21 IP68, IECEx Ex d IIC / Ex e II |

**Note** IP protection without GWDR is IP 54. To achieve IP 66/68 protection, a nylon GWDR must be ordered separately.

### Ordering data

| Typ | Thread | D1 outer cable Ø | D2 inner cable Ø | Cable armour | L/L1 | SW | MODR | SUHB | Qty. | Order No. |
|---|---|---|---|---|---|---|---|---|---|---|
| **metric, nickel-plated brass** | | | | | | | | | | |
| KDSW M20 BN 0 NI 1 G16 | M 20 / 1.5 | 4.90-10.00 | 4.00-8.40 | 0.9 | 58 / 16 | 24 | 32.5 | L24 | 20 | **1075030000** |
| KDSW M20 BN 0 NI 2 G16 | M 20 / 1.5 | 8.40-13.50 | 4.00-8.40 | 0.9 | 58 / 16 | 24 | 32.5 | L24 | 20 | **1075040000** |
| KDSW M20 BN 0 NI 1 G20 | M 20 / 1.5 | 12.00-17.60 | 6.70-14.00 | 0.9-1.25 | 58 / 16 | 30 | 32.5 | L30 | 20 | **1075070000** |
| KDSW M20 BN 0 NI 2 G20 | M 20 / 1.5 | 15.50-21.10 | 6.70-14.00 | 0.9-1.25 | 58 / 16 | 24 | 32.5 | L30 | 20 | **1075080000** |
| KDSW M20 BN 0 NI 1 G20S | M 20 / 1.5 | 9.40-12.50 | 8.00-11.70 | 0.9-1.25 | 58 / 16 | 30 | 32.5 | L24 | 20 | **1075050000** |
| KDSW M20 BN 0 NI 2 G20S | M 20 / 1.5 | 11.50-16.00 | 8.00-11.70 | 0.9-1.25 | 58 / 16 | 24 | 32.5 | L24 | 20 | **1075060000** |
| KDSW M25 BN 0 NI 1 G25 | M 25 / 1.5 | 16.80-23.90 | 13.00-20.00 | 1.25-1.6 | 58 / 16 | 38 | 47.5 | L38 | 20 | **1075090000** |
| KDSW M25 BN 0 NI 2 G25 | M 25 / 1.5 | 20.30-27.40 | 13.00-20.00 | 1.25-1.6 | 58 / 16 | 38 | 47.5 | L38 | 20 | **1075110000** |
| KDSW M32 BN 0 NI 1 G32 | M 32 / 1.5 | 23.20-30.50 | 19.00-26.30 | 1.6-2 | 65 / 16 | 46 | 55 | L46 | 10 | **1075120000** |
| KDSW M32 BN 0 NI 2 G32 | M 32 / 1.5 | 26.70-34.00 | 19.00-26.30 | 1.6-2 | 65 / 16 | 46 | 55 | L46 | 10 | **1075130000** |
| KDSW M40 BN 0 NI 1 G40 | M 40 / 1.5 | 28.60-36.20 | 25.00-32.20 | 1.6-2 | 72 / 16 | 55 | 65 | L55 | 10 | **1075140000** |
| KDSW M40 BN 0 NI 2 G40 | M 40 / 1.5 | 33.00-40.60 | 25.00-32.20 | 1.6-2 | 72 / 16 | 55 | 65 | L55 | 10 | **1075150000** |
| KDSW M50 BN 0 NI 1 G50 | M 50 / 1.5 | 41.10-48.50 | 36.50-44.10 | 2-2.5 | 73 / 16 | 65 | 80 | L65 | 1 | **1075180000** |
| KDSW M50 BN 0 NI 2 G50 | M 50 / 1.5 | 45.70-53.20 | 36.50-44.10 | 2-2.5 | 73 / 16 | 65 | 80 | L65 | 1 | **1075190000** |
| KDSW M50 BN 0 NI 1 G50S | M 50 / 1.5 | 34.80-42.40 | 31.50-38.20 | 2-2.5 | 73 / 16 | 65 | 80 | L65 | 1 | **1075160000** |
| KDSW M50 BN 0 NI 2 G50S | M 50 / 1.5 | 39.40-46.70 | 31.50-38.20 | 2-2.5 | 73 / 16 | 65 | 80 | L65 | 1 | **1075170000** |
| KDSW M63 BN 0 NI 1 G63 | M 63 / 1.5 | 53.80-61.20 | 49.50-56.00 | 2.5 | 76 / 19 | 80 | 95 | L80 | 1 | **1075230000** |
| KDSW M63 BN 0 NI 2 G63 | M 63 / 1.5 | 58.40-65.80 | 49.50-56.00 | 2.5 | 76 / 19 | 80 | 95 | L80 | 1 | **1075240000** |
| KDSW M63 BN 0 NI 1 G63S | M 63 / 1.5 | 47.50-54.80 | 42.50-50.10 | 2.5 | 76 / 19 | 80 | 95 | L80 | 1 | **1075210000** |
| KDSW M63 BN 0 NI 2 G63S | M 63 / 1.5 | 52.10-59.50 | 42.50-50.10 | 2.5 | 76 / 19 | 80 | 95 | L80 | 1 | **1075220000** |
| KDSW M75 BN 0 NI 1 G75 | M 75 / 1.5 | 66.50-73.40 | 60.50-68.00 | 2.5 | 82 / 19 | 90 | 110 | L90 | 1 | **1075270000** |
| KDSW M75 BN 0 NI 2 G75 | M 75 / 1.5 | 71.10-78.00 | 60.50-68.00 | 2.5 | 82 / 19 | 90 | 110 | L90 | 1 | **1075280000** |
| KDSW M75 BN 0 NI 1 G75S | M 75 / 1.5 | 60.20-68.00 | 54.50-62.00 | 2.5 | 82 / 19 | 90 | 110 | L90 | 1 | **1075250000** |
| KDSW M75 BN 0 NI 2 G75S | M 75 / 1.5 | 64.80-72.20 | 54.50-62.00 | 2.5 | 82 / 19 | 90 | 110 | L90 | 1 | **1075260000** |

**Note**
- All cable glands have a thread pitch of 1.5 mm.
- In the case of Ex d applications, the inner threads used for cable glands must meet the requirements of section 5.3 of EN/IEC 60079-1. In the screwed in position, at least 5 threads must be engaged.
- If the cable glands are installed in non-metallic Ex e connection equipment, these must be connected to the protective earth of the system.
- The connection cable must be laid securely and inflexibly to rule out tensile stress.

## Klippon® cable glands - Brass - Ex e, Ex d, IP 66 / IP 68 for armoured cables

Cable gland for cables and lines with single-wire armouring.

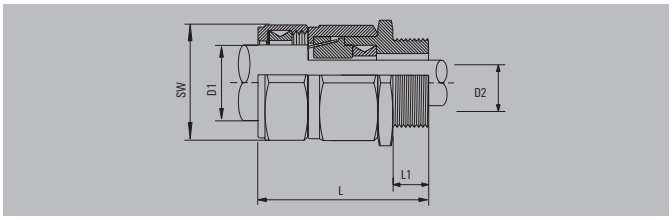


## Technical data

| | |
|---|---|
| Material | Brass |
| Seal insert | Silicone |
| Temperature range | -60 °C...180 °C |
| Protection degree | IP 54 |
| Protection degree with GWDR | IP 66, IP 68 - 2.5 bar |
| Water depth | 25 m (30 Min.) |
| Type of armouring | Single-wire armouring |
| Approval | ATEX II 2 GD, Ex d IIC / Ex e II / Ex tD A21 IP68, IECEx Ex d IIC / Ex e II |

**Note** IP protection without GWDR is IP 54. To achieve IP 66/68 protection, a nylon GWDR must be ordered separately.

## Ordering data

| Typ | Thread | D1 outer cable Ø | D2 inner cable Ø | Cable armour | L/L1 | SW | MODR | SUHB | Qty. | Order No. |
|---|---|---|---|---|---|---|---|---|---|---|
| **metric, brass** | | | | | | | | | | |
| KDSW M20 BS 0 SC 1 G16 | M 20 / 1.5 | 4.90-10.00 | 4.00-8.40 | 0.9 | 58 / 16 | 24 | 32.5 | L24 | 20 | **1136160000** |
| KDSW M20 BS 0 SC 2 G16 | M 20 / 1.5 | 8.40-13.50 | 4.00-8.40 | 0.9 | 58 / 16 | 24 | 32.5 | L24 | 20 | **1136170000** |
| KDSW M20 BS 0 SC 1 G20S | M 20 / 1.5 | 9.40-12.50 | 8.00-11.70 | 0.9-1.25 | 58 / 16 | 24 | 32.5 | L24 | 20 | **1136180000** |
| KDSW M20 BS 0 SC 2 G20S | M 20 / 1.5 | 11.50-16.00 | 8.00-11.70 | 0.9-1.25 | 58 / 16 | 24 | 32.5 | L24 | 20 | **1136190000** |
| KDSW M20 BS 0 SC 1 G20 | M 20 / 1.5 | 12.00-17.60 | 6.70-14.00 | 0.9-1.25 | 58 / 16 | 30 | 32.5 | L30 | 20 | **1136200000** |
| KDSW M20 BS 0 SC 2 G20 | M 20 / 1.5 | 15.50-21.10 | 6.70-14.00 | 0.9-1.25 | 58 / 16 | 30 | 32.5 | L30 | 20 | **1136210000** |
| KDSW M25 BS 0 SC 1 G25 | M 25 / 1.5 | 16.80-23.90 | 13.00-20.00 | 1.25-1.6 | 58 / 16 | 38 | 47.5 | L38 | 20 | **1136220000** |
| KDSW M25 BS 0 SC 2 G25 | M 25 / 1.5 | 20.30-27.40 | 13.00-20.00 | 1.25-1.6 | 58 / 16 | 38 | 47.5 | L38 | 20 | **1136230000** |
| KDSW M32 BS 0 SC 1 G32 | M 32 / 1.5 | 23.20-30.50 | 19.00-26.30 | 1.6-2 | 65 / 16 | 46 | 55 | L46 | 10 | **1136240000** |
| KDSW M32 BS 0 SC 2 G32 | M 32 / 1.5 | 26.70-34.00 | 19.00-26.30 | 1.6-2 | 65 / 16 | 46 | 55 | L46 | 10 | **1136250000** |
| KDSW M40 BS 0 SC 1 G40 | M 40 / 1.5 | 28.60-36.20 | 25.00-32.20 | 1.6-2 | 72 / 16 | 55 | 65 | L55 | 10 | **1136260000** |
| KDSW M40 BS 0 SC 2 G40 | M 40 / 1.5 | 33.00-40.60 | 25.00-32.20 | 1.6-2 | 72 / 16 | 55 | 65 | L55 | 10 | **1136270000** |
| KDSW M50 BS 0 SC 1 G50S | M 50 / 1.5 | 34.80-42.40 | 31.50-38.20 | 2-2.5 | 73 / 16 | 65 | 80 | L65 | 1 | **1136280000** |
| KDSW M50 BS 0 SC 2 G50S | M 50 / 1.5 | 39.40-46.70 | 31.50-38.20 | 2-2.5 | 73 / 16 | 65 | 80 | L65 | 1 | **1136290000** |
| KDSW M50 BS 0 SC 1 G50 | M 50 / 1.5 | 41.10-48.50 | 36.50-44.10 | 2-2.5 | 73 / 16 | 65 | 80 | L65 | 1 | **1136310000** |
| KDSW M50 BS 0 SC 2 G50 | M 50 / 1.5 | 45.70-53.20 | 36.50-44.10 | 2-2.5 | 73 / 16 | 65 | 80 | L65 | 1 | **1136320000** |
| KDSW M63 BS 0 SC 1 G63S | M 63 / 1.5 | 47.50-54.80 | 42.50-50.10 | 2.5 | 76 / 19 | 80 | 95 | L80 | 1 | **1136330000** |
| KDSW M63 BS 0 SC 2 G63S | M 63 / 1.5 | 52.10-59.50 | 42.50-50.10 | 2.5 | 76 / 19 | 80 | 95 | L80 | 1 | **1136340000** |
| KDSW M63 BS 0 SC 1 G63 | M 63 / 1.5 | 53.80-61.20 | 49.50-56.00 | 2.5 | 76 / 19 | 80 | 95 | L80 | 1 | **1136350000** |
| KDSW M63 BS 0 SC 2 G63 | M 63 / 1.5 | 58.40-65.80 | 49.50-56.00 | 2.5 | 76 / 19 | 80 | 95 | L80 | 1 | **1136360000** |
| KDSW M75 BS 0 SC 1 G75S | M 75 / 1.5 | 60.20-68.00 | 54.50-62.00 | 2.5 | 82 / 19 | 90 | 110 | L90 | 1 | **1136370000** |
| KDSW M75 BS 0 SC 2 G75S | M 75 / 1.5 | 64.80-72.20 | 54.50-62.00 | 2.5 | 82 / 19 | 90 | 110 | L90 | 1 | **1136380000** |
| KDSW M75 BS 0 SC 1 G75 | M 75 / 1.5 | 66.50-73.40 | 60.50-68.00 | 2.5 | 82 / 19 | 90 | 110 | L90 | 1 | **1136390000** |
| KDSW M75 BS 0 SC 2 G75 | M 75 / 1.5 | 71.10-78.00 | 60.50-68.00 | 2.5 | 82 / 19 | 90 | 110 | L90 | 1 | **1136400000** |

**Note**
- All cable glands have a thread pitch of 1.5 mm.
- In the case of Ex d applications, the inner threads used for cable glands must meet the requirements of section 5.3 of EN/IEC 60079-1. In the screwed in position, at least 5 threads must be engaged.
- If the cable glands are installed in non-metallic Ex e connection equipment, these must be connected to the protective earth of the system.
- The connection cable must be laid securely and inflexibly to rule out tensile stress.

## Klippon® cable glands - Brass - Ex e, Ex d, IP 66 / IP 68 for armoured cables

Cable gland for cables and lines with single-wire armouring.

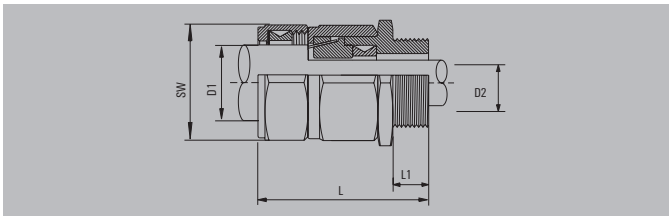


### Technical data

| | |
|---|---|
| Material | Brass, nickel-plated |
| Seal insert | Silicone |
| Temperature range | -60 °C...180 °C |
| Protection degree | IP 54 |
| Protection degree with GWDR | IP 66, IP 68 - 2.5 bar |
| Water depth | 25 m (30 Min.) |
| Type of armouring | Single-wire armouring |
| Approval | ATEX II 2 GD, Ex d IIC / Ex e II / Ex tD A21 IP68, IECEx Ex d IIC / Ex e II |

**Note** IP protection without GWDR is IP 54. To achieve IP 66/68 protection, a nylon GWDR must be ordered separately.

### Ordering data

| Typ | Thread | D1 outer cable Ø | D2 inner cable Ø | Cable armour | L/L1 | SW | MODR | SUHB | Qty. | Order No. |
|---|---|---|---|---|---|---|---|---|---|---|
| **metric, nickel-plated brass** | | | | | | | | | | |
| KDSW M20 BS 0 NI 1 G16 | M 20 / 1.5 | 4.90-10.00 | 4.00-8.40 | 0.9 | 58 / 16 | 24 | 32.5 | L24 | 20 | **1136410000** |
| KDSW M20 BS 0 NI 2 G16 | M 20 / 1.5 | 8.40-13.50 | 4.00-8.40 | 0.9 | 58 / 16 | 24 | 32.5 | L24 | 20 | **1136420000** |
| KDSW M20 BS 0 NI 1 G20 | M 20 / 1.5 | 12.00-17.60 | 6.70-14.00 | 0.9-1.25 | 58 / 16 | 30 | 32.5 | L30 | 20 | **1136450000** |
| KDSW M20 BS 0 NI 2 G20 | M 20 / 1.5 | 15.50-21.10 | 6.70-14.00 | 0.9-1.25 | 58 / 16 | 24 | 32.5 | L30 | 20 | **1136460000** |
| KDSW M20 BS 0 NI 1 G20S | M 20 / 1.5 | 9.40-12.50 | 8.00-11.70 | 0.9-1.25 | 58 / 16 | 30 | 32.5 | L24 | 20 | **1136430000** |
| KDSW M20 BS 0 NI 2 G20S | M 20 / 1.5 | 11.50-16.00 | 8.00-11.70 | 0.9-1.25 | 58 / 16 | 24 | 32.5 | L24 | 20 | **1136440000** |
| KDSW M25 BS 0 NI 1 G25 | M 25 / 1.5 | 16.80-23.90 | 13.00-20.00 | 1.25-1.6 | 58 / 16 | 38 | 47.5 | L38 | 20 | **1136470000** |
| KDSW M25 BS 0 NI 2 G25 | M 25 / 1.5 | 20.30-27.40 | 13.00-20.00 | 1.25-1.6 | 58 / 16 | 38 | 47.5 | L38 | 20 | **1136480000** |
| KDSW M32 BS 0 NI 1 G32 | M 32 / 1.5 | 23.20-30.50 | 19.00-26.30 | 1.6-2 | 65 / 16 | 46 | 55 | L46 | 10 | **1136490000** |
| KDSW M32 BS 0 NI 2 G32 | M 32 / 1.5 | 26.70-34.00 | 19.00-26.30 | 1.6-2 | 65 / 16 | 46 | 55 | L46 | 10 | **1136510000** |
| KDSW M40 BS 0 NI 1 G40 | M 40 / 1.5 | 28.60-36.20 | 25.00-32.20 | 1.6-2 | 72 / 16 | 55 | 65 | L55 | 10 | **1136520000** |
| KDSW M40 BS 0 NI 2 G40 | M 40 / 1.5 | 33.00-40.60 | 25.00-32.20 | 1.6-2 | 72 / 16 | 55 | 65 | L55 | 10 | **1136530000** |
| KDSW M50 BS 0 NI 1 G50 | M 50 / 1.5 | 41.10-48.50 | 36.50-44.10 | 2-2.5 | 73 / 16 | 65 | 80 | L65 | 1 | **1136560000** |
| KDSW M50 BS 0 NI 2 G50 | M 50 / 1.5 | 45.70-53.20 | 36.50-44.10 | 2-2.5 | 73 / 16 | 65 | 80 | L65 | 1 | **1136570000** |
| KDSW M50 BS 0 NI 1 G50S | M 50 / 1.5 | 34.80-42.40 | 31.50-38.20 | 2-2.5 | 73 / 16 | 65 | 80 | L65 | 1 | **1136540000** |
| KDSW M50 BS 0 NI 2 G50S | M 50 / 1.5 | 39.40-46.70 | 31.50-38.20 | 2-2.5 | 73 / 16 | 65 | 80 | L65 | 1 | **1136550000** |
| KDSW M63 BS 0 NI 1 G63 | M 63 / 1.5 | 53.80-61.20 | 49.50-56.00 | 2.5 | 76 / 19 | 80 | 95 | L80 | 1 | **1136600000** |
| KDSW M63 BS 0 NI 2 G63 | M 63 / 1.5 | 58.40-65.80 | 49.50-56.00 | 2.5 | 76 / 19 | 80 | 95 | L80 | 1 | **1136610000** |
| KDSW M63 BS 0 NI 1 G63S | M 63 / 1.5 | 47.50-54.80 | 42.50-50.10 | 2.5 | 76 / 19 | 80 | 95 | L80 | 1 | **1136580000** |
| KDSW M63 BS 0 NI 2 G63S | M 63 / 1.5 | 52.10-59.50 | 42.50-50.10 | 2.5 | 76 / 19 | 80 | 95 | L80 | 1 | **1136590000** |
| KDSW M75 BS 0 NI 1 G75 | M 75 / 1.5 | 66.50-73.40 | 60.50-68.00 | 2.5 | 82 / 19 | 90 | 110 | L90 | 1 | **1136640000** |
| KDSW M75 BS 0 NI 2 G75 | M 75 / 1.5 | 71.10-78.00 | 60.50-68.00 | 2.5 | 82 / 19 | 90 | 110 | L90 | 1 | **1136650000** |
| KDSW M75 BS 0 NI 1 G75S | M 75 / 1.5 | 60.20-68.00 | 54.50-62.00 | 2.5 | 82 / 19 | 90 | 110 | L90 | 1 | **1136620000** |
| KDSW M75 BS 0 NI 2 G75S | M 75 / 1.5 | 64.80-72.20 | 54.50-62.00 | 2.5 | 82 / 19 | 90 | 110 | L90 | 1 | **1136630000** |

**Note**
- All cable glands have a thread pitch of 1.5 mm.
- In the case of Ex d applications, the inner threads used for cable glands must meet the requirements of section 5.3 of EN/IEC 60079-1. In the screwed in position, at least 5 threads must be engaged.
- If the cable glands are installed in non-metallic Ex e connection equipment, these must be connected to the protective earth of the system.
- The connection cable must be laid securely and inflexibly to rule out tensile stress.

## Klippon® cable glands - Brass - Ex e, Ex d, IP 66 / IP 68 for armoured cables

Cable gland for cables and lines with single-wire armouring and lead-sheath armouring.

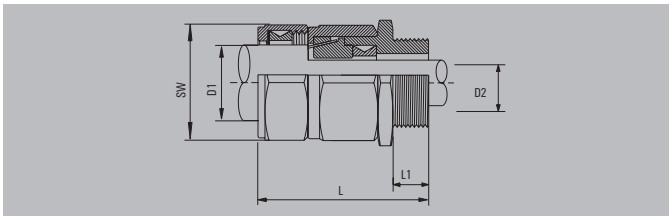


### Technical data

| | |
|---|---|
| Material | Brass |
| Seal insert | CR |
| Temperature range | -20 °C...85 °C |
| Protection degree | IP 54 |
| Protection degree with GWDR | IP 66, IP 68 - 2.5 bar |
| Water depth | 25 m (30 Min.) |
| Type of armouring | Single-wire armouring, Lead sheath armouring |
| Approval | ATEX II 2 GD, Ex d IIC / Ex e II / Ex tD A21 IP68, IECEx Ex d IIC / Ex e II |

**Note** IP protection without GWDR is IP 54. To achieve IP 66/68 protection, a nylon GWDR must be ordered separately.

### Ordering data

| Typ | Thread | D1 outer cable Ø | D2 inner cable Ø | Cable armour | L/L1 | SW | MODR | SUHB | Qty. | Order No. |
|---|---|---|---|---|---|---|---|---|---|---|
| **metric, brass** | | | | | | | | | | |
| KDSW M20 BN L SC 1 G16 | M 20 / 1.5 | 4.90-10.00 | 4.00-8.40 | 0.9 | 58 / 16 | 24 | 32.5 | L24 | 20 | **1076250000** |
| KDSW M20 BN L SC 2 G16 | M 20 / 1.5 | 8.40-13.50 | 4.00-8.40 | 0.9 | 58 / 16 | 24 | 32.5 | L24 | 20 | **1076270000** |
| KDSW M20 BN L SC 1 G20S | M 20 / 1.5 | 9.40-12.50 | 8.00-11.70 | 0.9-1.25 | 58 / 16 | 24 | 32.5 | L24 | 20 | **1076280000** |
| KDSW M20 BN L SC 2 G20S | M 20 / 1.5 | 11.50-16.00 | 8.00-11.70 | 0.9-1.25 | 58 / 16 | 24 | 32.5 | L24 | 20 | **1076290000** |
| KDSW M20 BN L SC 1 G20 | M 20 / 1.5 | 12.00-17.60 | 6.70-14.00 | 0.9-1.25 | 58 / 16 | 30 | 32.5 | L30 | 20 | **1076300000** |
| KDSW M20 BN L SC 2 G20 | M 20 / 1.5 | 15.50-21.10 | 6.70-14.00 | 0.9-1.25 | 58 / 16 | 30 | 32.5 | L30 | 20 | **1076310000** |
| KDSW M25 BN L SC 1 G25 | M 25 / 1.5 | 16.80-23.90 | 13.00-20.00 | 1.25-1.6 | 58 / 16 | 38 | 47.5 | L38 | 20 | **1076320000** |
| KDSW M25 BN L SC 2 G25 | M 25 / 1.5 | 20.30-27.40 | 13.00-20.00 | 1.25-1.6 | 58 / 16 | 38 | 47.5 | L38 | 20 | **1076330000** |
| KDSW M32 BN L SC 1 G32 | M 32 / 1.5 | 23.20-30.50 | 19.00-26.30 | 1.6-2 | 65 / 16 | 46 | 55 | L46 | 10 | **1076340000** |
| KDSW M32 BN L SC 2 G32 | M 32 / 1.5 | 26.70-34.00 | 19.00-26.30 | 1.6-2 | 65 / 16 | 46 | 55 | L46 | 10 | **1076350000** |
| KDSW M40 BN L SC 1 G40 | M 40 / 1.5 | 28.60-36.20 | 25.00-32.20 | 1.6-2 | 72 / 16 | 55 | 65 | L55 | 10 | **1076360000** |
| KDSW M40 BN L SC 2 G40 | M 40 / 1.5 | 33.00-40.60 | 25.00-32.20 | 1.6-2 | 72 / 16 | 55 | 65 | L55 | 10 | **1076370000** |
| KDSW M50 BN L SC 1 G50S | M 50 / 1.5 | 34.80-42.40 | 31.50-38.20 | 2-2.5 | 73 / 16 | 65 | 80 | L65 | 1 | **1076380000** |
| KDSW M50 BN L SC 2 G50S | M 50 / 1.5 | 39.40-46.70 | 31.50-38.20 | 2-2.5 | 73 / 16 | 65 | 80 | L65 | 1 | **1076390000** |
| KDSW M50 BN L SC 1 G50 | M 50 / 1.5 | 41.10-48.50 | 36.50-44.10 | 2-2.5 | 73 / 16 | 65 | 80 | L65 | 1 | **1076400000** |
| KDSW M50 BN L SC 2 G50 | M 50 / 1.5 | 45.70-53.20 | 36.50-44.10 | 2-2.5 | 73 / 16 | 65 | 80 | L65 | 1 | **1076410000** |
| KDSW M63 BN L SC 1 G63S | M 63 / 1.5 | 47.50-54.80 | 42.50-50.10 | 2.5 | 76 / 19 | 80 | 95 | L80 | 1 | **1076420000** |
| KDSW M63 BN L SC 2 G63S | M 63 / 1.5 | 52.10-59.50 | 42.50-50.10 | 2.5 | 76 / 19 | 80 | 95 | L80 | 1 | **1076430000** |
| KDSW M63 BN L SC 1 G63 | M 63 / 1.5 | 53.80-61.20 | 49.50-56.00 | 2.5 | 76 / 19 | 80 | 95 | L80 | 1 | **1076440000** |
| KDSW M63 BN L SC 2 G63 | M 63 / 1.5 | 58.40-65.80 | 49.50-56.00 | 2.5 | 76 / 19 | 80 | 95 | L80 | 1 | **1076450000** |
| KDSW M75 BN L SC 1 G75S | M 75 / 1.5 | 60.20-68.00 | 54.50-62.00 | 2.5 | 82 / 19 | 90 | 110 | L90 | 1 | **1076460000** |
| KDSW M75 BN L SC 2 G75S | M 75 / 1.5 | 64.80-72.20 | 54.50-62.00 | 2.5 | 82 / 19 | 90 | 110 | L90 | 1 | **1076470000** |
| KDSW M75 BN L SC 1 G75 | M 75 / 1.5 | 66.50-73.40 | 60.50-68.00 | 2.5 | 82 / 19 | 90 | 110 | L90 | 1 | **1076480000** |
| KDSW M75 BN L SC 2 G75 | M 75 / 1.5 | 71.10-78.00 | 60.50-68.00 | 2.5 | 82 / 19 | 90 | 110 | L90 | 1 | **1076490000** |

**Note**
- All cable glands have a thread pitch of 1.5 mm.
- In the case of Ex d applications, the inner threads used for cable glands must meet the requirements of section 5.3 of EN/IEC 60079-1. In the screwed in position, at least 5 threads must be engaged.
- If the cable glands are installed in non-metallic Ex e connection equipment, these must be connected to the protective earth of the system.
- The connection cable must be laid securely and inflexibly to rule out tensile stress.

## Klippon® cable glands - Brass - Ex e, Ex d, IP 66 / IP 68 for armoured cables

Cable gland for cables and lines with single-wire armouring and lead-sheath armouring.

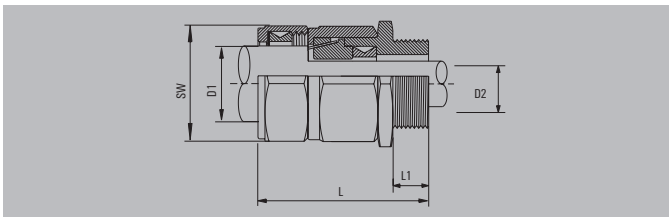


## Technical data

| | |
|---|---|
| Material | Brass, nickel-plated |
| Seal insert | CR |
| Temperature range | -20 °C...85 °C |
| Protection degree | IP 54 |
| Protection degree with GWDR | IP 66, IP 68 - 2.5 bar |
| Water depth | 25 m (30 Min.) |
| Type of armouring | Single-wire armouring, Lead sheath armouring |
| Approval | ATEX II 2 GD, Ex d IIC / Ex e II / Ex tD A21 IP68, IECEx Ex d IIC / Ex e II |

**Note** IP protection without GWDR is IP 54. To achieve IP 66/68 protection, a nylon GWDR must be ordered separately.

## Ordering data

| Typ | Thread | D1 outer cable Ø | D2 inner cable Ø | Cable armour | L/L1 | SW | MODR | SUHB | Qty. | Order No. |
|---|---|---|---|---|---|---|---|---|---|---|
| **metric, nickel-plated brass** | | | | | | | | | | |
| KDSW M20 BN L NI 1 G16 | M 20 / 1.5 | 4.90-10.00 | 4.00-8.40 | 0.9 | 58 / 16 | 24 | 32.5 | L24 | 20 | **1074660000** |
| KDSW M20 BN L NI 2 G16 | M 20 / 1.5 | 8.40-13.50 | 4.00-8.40 | 0.9 | 58 / 16 | 24 | 32.5 | L24 | 20 | **1074690000** |
| KDSW M20 BN L NI 1 G20 | M 20 / 1.5 | 12.00-17.60 | 6.70-14.00 | 0.9-1.25 | 58 / 16 | 30 | 32.5 | L30 | 20 | **1074760000** |
| KDSW M20 BN L NI 2 G20 | M 20 / 1.5 | 15.50-21.10 | 6.70-14.00 | 0.9-1.25 | 58 / 16 | 30 | 32.5 | L30 | 20 | **1074780000** |
| KDSW M20 BN L NI 1 G20S | M 20 / 1.5 | 9.40-12.50 | 8.00-11.70 | 0.9-1.25 | 58 / 16 | 24 | 32.5 | L24 | 20 | **1074720000** |
| KDSW M20 BN L NI 2 G20S | M 20 / 1.5 | 11.50-16.00 | 8.00-11.70 | 0.9-1.25 | 58 / 16 | 24 | 32.5 | L24 | 20 | **1074740000** |
| KDSW M25 BN L NI 1 G25 | M 25 / 1.5 | 16.80-23.90 | 13.00-20.00 | 1.25-1.6 | 58 / 16 | 38 | 47.5 | L38 | 20 | **1074810000** |
| KDSW M25 BN L NI 2 G25 | M 25 / 1.5 | 20.30-27.40 | 13.00-20.00 | 1.25-1.6 | 58 / 16 | 38 | 47.5 | L38 | 20 | **1074830000** |
| KDSW M32 BN L NI 1 G32 | M 32 / 1.5 | 23.20-30.50 | 19.00-26.30 | 1.6-2 | 65 / 16 | 46 | 55 | L46 | 10 | **1074850000** |
| KDSW M32 BN L NI 2 G32 | M 32 / 1.5 | 26.70-34.00 | 19.00-26.30 | 1.6-2 | 65 / 16 | 46 | 55 | L46 | 10 | **1074860000** |
| KDSW M40 BN L NI 1 G40 | M 40 / 1.5 | 28.60-36.20 | 25.00-32.20 | 1.6-2 | 72 / 16 | 55 | 65 | L55 | 10 | **1074870000** |
| KDSW M40 BN L NI 2 G40 | M 40 / 1.5 | 33.00-40.60 | 25.00-32.20 | 1.6-2 | 72 / 16 | 55 | 65 | L55 | 10 | **1074880000** |
| KDSW M50 BN L NI 1 G50 | M 50 / 1.5 | 41.40-48.50 | 36.50-44.10 | 2-2.5 | 73 / 16 | 65 | 80 | L65 | 1 | **1074920000** |
| KDSW M50 BN L NI 2 G50 | M 50 / 1.5 | 45.70-53.20 | 36.50-44.10 | 2-2.5 | 73 / 16 | 65 | 80 | L65 | 1 | **1074930000** |
| KDSW M50 BN L NI 1 G50S | M 50 / 1.5 | 34.80-42.40 | 31.50-38.20 | 2-2.5 | 73 / 16 | 65 | 80 | L65 | 1 | **1074890000** |
| KDSW M50 BN L NI 2 G50S | M 50 / 1.5 | 39.40-46.70 | 31.50-38.20 | 2-2.5 | 73 / 16 | 65 | 80 | L65 | 1 | **1074910000** |
| KDSW M63 BN L NI 1 G63 | M 63 / 1.5 | 53.80-61.20 | 49.50-56.00 | 2.5 | 76 / 19 | 80 | 95 | L80 | 1 | **1074960000** |
| KDSW M63 BN L NI 2 G63 | M 63 / 1.5 | 58.40-65.80 | 49.50-56.00 | 2.5 | 76 / 19 | 80 | 95 | L80 | 1 | **1074970000** |
| KDSW M63 BN L NI 1 G63S | M 63 / 1.5 | 47.50-54.80 | 42.50-50.10 | 2.5 | 76 / 19 | 80 | 95 | L80 | 1 | **1074940000** |
| KDSW M63 BN L NI 2 G63S | M 63 / 1.5 | 52.10-59.50 | 42.50-50.10 | 2.5 | 76 / 19 | 80 | 95 | L80 | 1 | **1074950000** |
| KDSW M75 BN L NI 1 G75 | M 75 / 1.5 | 66.50-73.40 | 60.50-68.00 | 2.5 | 82 / 19 | 90 | 110 | L90 | 1 | **1075010000** |
| KDSW M75 BN L NI 2 G75 | M 75 / 1.5 | 71.10-78.00 | 60.50-68.00 | 2.5 | 82 / 19 | 90 | 110 | L90 | 1 | **1075020000** |
| KDSW M75 BN L NI 1 G75S | M 75 / 1.5 | 60.20-68.00 | 54.50-62.00 | 2.5 | 82 / 19 | 90 | 110 | L90 | 1 | **1074980000** |
| KDSW M75 BN L NI 2 G75S | M 75 / 1.5 | 64.80-72.20 | 54.50-62.00 | 2.5 | 82 / 19 | 90 | 110 | L90 | 1 | **1074990000** |

**Note**
- All cable glands have a thread pitch of 1.5 mm.
- In the case of Ex d applications, the inner threads used for cable glands must meet the requirements of section 5.3 of EN/IEC 60079-1. In the screwed in position, at least 5 threads must be engaged.
- If the cable glands are installed in non-metallic Ex e connection equipment, these must be connected to the protective earth of the system.
- The connection cable must be laid securely and inflexibly to rule out tensile stress.

## Klippon® cable glands - Brass - Ex e, Ex d, IP 66 / IP 68 for armoured cables

Cable gland for cables and lines with braided armouring.

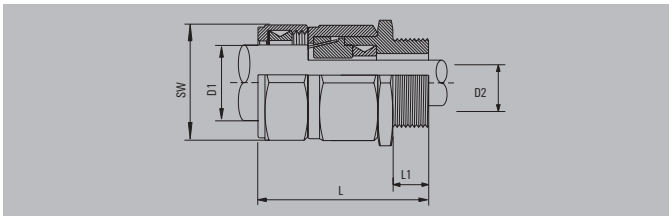


## Technical data

| | |
|---|---|
| Material | Brass |
| Seal insert | Silicone |
| Temperature range | -60 °C...180 °C |
| Protection degree | IP 54 |
| Protection degree with GWDR | IP 66, IP 68 - 2.5 bar |
| Water depth | 25 m (30 Min.) |
| Type of armouring | Braided armouring |
| Approval | ATEX II 2 GD, Ex d IIC / Ex e II / Ex tD A21 IP68, IECEx Ex d IIC / Ex e II |

**Note** IP protection without GWDR is IP 54. To achieve IP 66/68 protection, a nylon GWDR must be ordered separately.

## Ordering data

| Typ | Thread | D1 outer cable Ø | D2 inner cable Ø | Cable armour | L/L1 | SW | MODR | SUHB | Qty. | Order No. |
|---|---|---|---|---|---|---|---|---|---|---|
| **metric, brass** | | | | | | | | | | |
| KDSX M20 BS 0 SC 1 G16 | M 20 / 1.5 | 4.90-10.00 | 4.00-8.40 | 0.15-0.35 | 58 / 16 | 24 | 32.5 | L24 | 20 | **1135650000** |
| KDSX M20 BS 0 SC 2 G16 | M 20 / 1.5 | 8.40-13.50 | 4.00-8.40 | 0.15-0.35 | 58 / 16 | 24 | 32.5 | L24 | 20 | **1135660000** |
| KDSX M20 BS 0 SC 1 G20S | M 20 / 1.5 | 9.40-12.50 | 8.00-11.70 | 0.15-0.35 | 58 / 16 | 24 | 32.5 | L24 | 20 | **1135670000** |
| KDSX M20 BS 0 SC 2 G20S | M 20 / 1.5 | 11.50-16.00 | 8.00-11.70 | 0.15-0.35 | 58 / 16 | 24 | 32.5 | L24 | 20 | **1135680000** |
| KDSX M20 BS 0 SC 1 G20 | M 20 / 1.5 | 12.00-17.60 | 6.70-14.00 | 0.15-0.5 | 58 / 16 | 30 | 32.5 | L30 | 20 | **1135690000** |
| KDSX M20 BS 0 SC 2 G20 | M 20 / 1.5 | 15.50-21.10 | 6.70-14.00 | 0.15-0.5 | 58 / 16 | 30 | 32.5 | L30 | 20 | **1135710000** |
| KDSX M25 BS 0 SC 1 G25 | M 25 / 1.5 | 16.80-23.90 | 13.00-20.00 | 0.15-0.5 | 58 / 16 | 38 | 47.5 | L38 | 20 | **1135720000** |
| KDSX M25 BS 0 SC 2 G25 | M 25 / 1.5 | 20.30-27.40 | 13.00-20.00 | 0.15-0.5 | 58 / 16 | 38 | 47.5 | L38 | 20 | **1135730000** |
| KDSX M32 BS 0 SC 1 G32 | M 32 / 1.5 | 23.20-30.50 | 19.00-26.30 | 0.15-0.55 | 65 / 16 | 46 | 55 | L46 | 10 | **1135740000** |
| KDSX M32 BS 0 SC 2 G32 | M 32 / 1.5 | 26.70-34.00 | 19.00-26.30 | 0.15-0.55 | 65 / 16 | 46 | 55 | L46 | 10 | **1135750000** |
| KDSX M40 BS 0 SC 1 G40 | M 40 / 1.5 | 28.60-36.20 | 25.00-32.20 | 0.2-0.6 | 72 / 16 | 55 | 65 | L55 | 10 | **1135760000** |
| KDSX M40 BS 0 SC 2 G40 | M 40 / 1.5 | 33.00-40.60 | 25.00-32.20 | 0.2-0.6 | 72 / 16 | 55 | 65 | L55 | 10 | **1135770000** |
| KDSX M50 BS 0 SC 1 G50S | M 50 / 1.5 | 34.80-42.40 | 31.50-38.20 | 0.2-0.6 | 73 / 16 | 65 | 80 | L65 | 1 | **1135780000** |
| KDSX M50 BS 0 SC 2 G50S | M 50 / 1.5 | 39.40-46.70 | 31.50-38.20 | 0.2-0.6 | 73 / 16 | 65 | 80 | L65 | 1 | **1135790000** |
| KDSX M50 BS 0 SC 1 G50 | M 50 / 1.5 | 41.10-48.50 | 36.50-44.10 | 0.3-0.8 | 73 / 16 | 65 | 80 | L65 | 1 | **1135800000** |
| KDSX M50 BS 0 SC 2 G50 | M 50 / 1.5 | 45.70-53.20 | 36.50-44.10 | 0.3-0.8 | 73 / 16 | 65 | 80 | L65 | 1 | **1135810000** |
| KDSX M63 BS 0 SC 1 G63S | M 63 / 1.5 | 47.50-54.80 | 42.50-50.10 | 0.3-0.8 | 76 / 19 | 80 | 95 | L80 | 1 | **1135820000** |
| KDSX M63 BS 0 SC 2 G63S | M 63 / 1.5 | 52.10-59.50 | 42.50-50.10 | 0.3-0.8 | 76 / 19 | 80 | 95 | L80 | 1 | **1135830000** |
| KDSX M63 BS 0 SC 1 G63 | M 63 / 1.5 | 53.80-61.20 | 49.50-56.00 | 0.3-0.8 | 76 / 19 | 80 | 95 | L80 | 1 | **1135840000** |
| KDSX M63 BS 0 SC 2 G63 | M 63 / 1.5 | 58.40-65.80 | 49.50-56.00 | 0.3-0.8 | 76 / 19 | 80 | 95 | L80 | 1 | **1135850000** |
| KDSX M75 BS 0 SC 1 G75S | M 75 / 1.5 | 60.20-68.00 | 54.50-62.00 | 0.3-1 | 82 / 19 | 90 | 110 | L90 | 1 | **1135860000** |
| KDSX M75 BS 0 SC 2 G75S | M 75 / 1.5 | 64.80-72.20 | 54.50-62.00 | 0.3-1 | 82 / 19 | 90 | 110 | L90 | 1 | **1135870000** |
| KDSX M75 BS 0 SC 1 G75 | M 75 / 1.5 | 66.50-73.40 | 60.50-68.00 | 0.3-1 | 82 / 19 | 90 | 110 | L90 | 1 | **1135880000** |
| KDSX M75 BS 0 SC 2 G75 | M 75 / 1.5 | 71.10-78.00 | 60.50-68.00 | 0.3-1 | 82 / 19 | 90 | 110 | L90 | 1 | **1135890000** |

**Note**
- All cable glands have a thread pitch of 1.5 mm.
- In the case of Ex d applications, the inner threads used for cable glands must meet the requirements of section 5.3 of EN/IEC 60079-1. In the screwed in position, at least 5 threads must be engaged.
- If the cable glands are installed in non-metallic Ex e connection equipment, these must be connected to the protective earth of the system.
- The connection cable must be laid securely and inflexibly to rule out tensile stress.

## Klippon® cable glands - Brass - Ex e, Ex d, IP 66 / IP 68 for armoured cables

Cable gland for cables and lines with braided armouring.

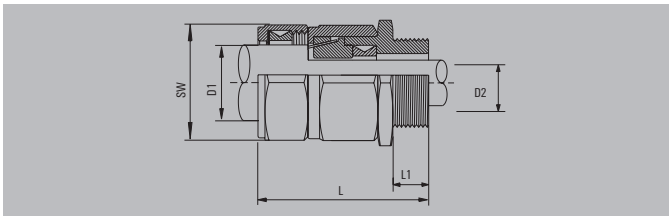


## Technical data

| | |
|---|---|
| Material | Brass, nickel-plated |
| Seal insert | Silicone |
| Temperature range | -60 °C...180 °C |
| Protection degree | IP 54 |
| Protection degree with GWDR | IP 66, IP 68 - 2.5 bar |
| Water depth | 25 m (30 Min.) |
| Type of armouring | Braided armouring |
| Approval | ATEX II 2 GD, Ex d IIC / Ex e II / Ex tD A21 IP68, IECEx Ex d IIC / Ex e II |

**Note** IP protection without GWDR is IP 54. To achieve IP 66/68 protection, a nylon GWDR must be ordered separately.

## Ordering data

| Typ | Thread | D1 outer cable Ø | D2 inner cable Ø | Cable armour | L/L1 | SW | MODR | SUHB | Qty. | Order No. |
|---|---|---|---|---|---|---|---|---|---|---|
| **metric, nickel-plated brass** | | | | | | | | | | |
| KDSX M20 BS O NI 1 G16 | M 20 / 1.5 | 4.90-10.00 | 4.00-8.40 | 0.15-0.35 | 58 / 16 | 24 | 32.5 | L24 | 20 | **1135910000** |
| KDSX M20 BS O NI 2 G16 | M 20 / 1.5 | 8.40-13.50 | 4.00-8.40 | 0.15-0.35 | 58 / 16 | 24 | 32.5 | L24 | 20 | **1135920000** |
| KDSX M20 BS O NI 1 G20 | M 20 / 1.5 | 12.00-17.60 | 6.70-14.00 | 0.15-0.5 | 58 / 16 | 30 | 32.5 | L30 | 20 | **1135950000** |
| KDSX M20 BS O NI 2 G20 | M 20 / 1.5 | 15.50-21.10 | 6.70-14.00 | 0.15-0.5 | 58 / 16 | 30 | 32.5 | L30 | 20 | **1135960000** |
| KDSX M20 BS O NI 1 G20S | M 20 / 1.5 | 9.40-12.50 | 8.00-11.70 | 0.15-0.35 | 58 / 16 | 24 | 32.5 | L24 | 20 | **1135930000** |
| KDSX M20 BS O NI 2 G20S | M 20 / 1.5 | 11.50-16.00 | 8.00-11.70 | 0.15-0.35 | 58 / 16 | 24 | 32.5 | L24 | 20 | **1135940000** |
| KDSX M25 BS O NI 1 G25 | M 25 / 1.5 | 16.80-23.90 | 13.00-20.00 | 0.15-0.5 | 58 / 16 | 38 | 47.5 | L38 | 20 | **1135970000** |
| KDSX M25 BS O NI 2 G25 | M 25 / 1.5 | 20.30-27.40 | 13.00-20.00 | 0.15-0.5 | 58 / 16 | 38 | 47.5 | L38 | 20 | **1135980000** |
| KDSX M32 BS O NI 1 G32 | M 32 / 1.5 | 23.20-30.50 | 19.00-26.30 | 0.15-0.55 | 65 / 16 | 46 | 55 | L46 | 10 | **1135990000** |
| KDSX M32 BS O NI 2 G32 | M 32 / 1.5 | 26.70-34.00 | 19.00-26.30 | 0.15-0.55 | 65 / 16 | 46 | 55 | L46 | 10 | **1136000000** |
| KDSX M40 BS O NI 1 G40 | M 40 / 1.5 | 28.60-36.20 | 25.00-32.20 | 0.2-0.6 | 72 / 16 | 55 | 65 | L55 | 10 | **1136010000** |
| KDSX M40 BS O NI 2 G40 | M 40 / 1.5 | 33.00-40.60 | 25.00-32.20 | 0.2-0.6 | 72 / 16 | 55 | 65 | L55 | 10 | **1136020000** |
| KDSX M50 BS O NI 1 G50 | M 50 / 1.5 | 41.10-48.50 | 36.50-44.10 | 0.2-0.8 | 73 / 16 | 65 | 80 | L65 | 1 | **1136050000** |
| KDSX M50 BS O NI 2 G50 | M 50 / 1.5 | 45.70-53.20 | 36.50-44.10 | 0.2-0.8 | 73 / 16 | 65 | 80 | L65 | 1 | **1136060000** |
| KDSX M50 BS O NI 1 G50S | M 50 / 1.5 | 34.80-42.40 | 31.50-38.20 | 0.2-0.6 | 73 / 16 | 65 | 80 | L65 | 1 | **1136030000** |
| KDSX M50 BS O NI 2 G50S | M 50 / 1.5 | 39.40-46.70 | 31.50-38.20 | 0.2-0.6 | 73 / 16 | 65 | 80 | L65 | 1 | **1136040000** |
| KDSX M63 BS O NI 1 G63 | M 63 / 1.5 | 53.80-61.20 | 49.50-65.00 | 0.3-0.8 | 76 / 19 | 80 | 95 | L80 | 1 | **1136090000** |
| KDSX M63 BS O NI 2 G63 | M 63 / 1.5 | 58.40-65.80 | 49.50-65.00 | 0.3-0.8 | 76 / 19 | 80 | 95 | L80 | 1 | **1136110000** |
| KDSX M63 BS O NI 1 G63S | M 63 / 1.5 | 47.50-54.80 | 42.50-50.10 | 0.3-0.8 | 76 / 19 | 80 | 95 | L80 | 1 | **1136070000** |
| KDSX M63 BS O NI 2 G63S | M 63 / 1.5 | 52.10-59.50 | 42.50-50.10 | 0.3-0.8 | 76 / 19 | 80 | 95 | L80 | 1 | **1136080000** |
| KDSX M75 BS O NI 1 G75 | M 75 / 1.5 | 66.50-73.40 | 60.50-68.00 | 0.3-1 | 82 / 19 | 90 | 110 | L90 | 1 | **1136140000** |
| KDSX M75 BS O NI 2 G75 | M 75 / 1.5 | 71.10-78.00 | 60.50-68.00 | 0.3-1 | 82 / 19 | 90 | 110 | L90 | 1 | **1136150000** |
| KDSX M75 BS O NI 1 G75S | M 75 / 1.5 | 60.20-68.00 | 54.50-62.00 | 0.3-1 | 82 / 19 | 90 | 110 | L90 | 1 | **1136120000** |
| KDSX M75 BS O NI 2 G75S | M 75 / 1.5 | 64.80-72.20 | 54.50-62.00 | 0.3-1 | 82 / 19 | 90 | 110 | L90 | 1 | **1136130000** |

**Note**
- All cable glands have a thread pitch of 1.5 mm.
- In the case of Ex d applications, the inner threads used for cable glands must meet the requirements of section 5.3 of EN/IEC 60079-1. In the screwed in position, at least 5 threads must be engaged.
- If the cable glands are installed in non-metallic Ex e connection equipment, these must be connected to the protective earth of the system.
- The connection cable must be laid securely and inflexibly to rule out tensile stress.

## Klippon® cable glands - Brass - Ex e, Ex d, IP 66 / IP 68 for non-armoured cables

Cable gland exclusively for non-armoured cables and lines.

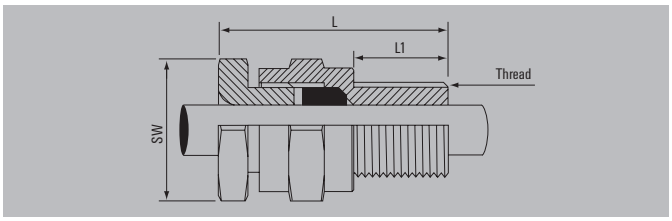


### Technical data

| | |
|---|---|
| Material | Brass, nickel-plated |
| O-ring / Seal insert | CR / CR |
| Temperature range | -20 °C...85 °C |
| Degree of protection | IP 66, IP 68 - 2.5 bar |
| Water depth | 25 m (30 Min.) |
| Approval | ATEX II 2 GD, Ex d IIC / Ex e II / Ex tD A21 IP68, IECEx Ex d IIC / Ex e II |

**Note** Length „L" varies according to cable diameter used.

### Ordering data

| Typ | Thread | KB | L/L1 | SW | SUHB | Qty. | Order No. |
|---|---|---|---|---|---|---|---|
| **metric, brass** | | | | | | | |
| KSG M20 BN 0 SC 2 G16 | M 20 / 1.5 | 4-8.4 | 33 / 16 | 25 | L24 | 20 | **1909380000** |
| KSG M20 BN 0 SC 2 G20S | M 20 / 1.5 | 7.2-11.7 | 33 / 16 | 25 | L24 | 20 | **1909400000** |
| KSG M20 BN 0 SC 2 G20 | M 20 / 1.5 | 9.6-14 | 33 / 16 | 30 | L30 | 20 | **1909410000** |
| KSG M25 BN 0 SC 2 G25 | M 25 / 1.5 | 13.5-20 | 33 / 16 | 38 | L38 | 20 | **1909420000** |
| KSG M32 BN 0 SC 2 G32 | M 32 / 1.5 | 19.5-26.3 | 33 / 16 | 46 | L46 | 10 | **1909430000** |
| KSG M40 BN 0 SC 2 G40 | M 40 / 1.5 | 23-32.2 | 37 / 16 | 55 | L55 | 10 | **1909440000** |
| KSG M50 BN 0 SC 2 G50S | M 50 / 1.5 | 28.2-38.2 | 37 / 16 | 65 | L65 | 1 | **1909450000** |
| KSG M50 BN 0 SC 2 G50 | M 50 / 1.5 | 33.2-44.1 | 37 / 16 | 65 | L65 | 1 | **1909460000** |
| KSG M63 BN 0 SC 2 G63S | M 63 / 1.5 | 39.3-50.1 | 37 / 19 | 80 | L80 | 1 | **1909470000** |
| KSG M63 BN 0 SC 2 G63 | M 63 / 1.5 | 46.7-56 | 37 / 19 | 80 | L80 | 1 | **1909480000** |
| KSG M75 BN 0 SC 2 G75 | M 75 / 1.5 | 58.1-68 | 37 / 19 | 90 | L90 | 1 | **1075340000** |
| KSG M75 BN 0 SC 2 G75S | M 75 / 1.5 | 52.3-62 | 37 / 19 | 90 | L90 | 1 | **1075330000** |
| **metric, nickel-plated brass** | | | | | | | |
| KSG M20 BN 0 NI 2 G16 | M 20 / 1.5 | 4-8.4 | 33 / 16 | 25 | L24 | 20 | **1911510000** |
| KSG M20 BN 0 NI 2 G20S | M 20 / 1.5 | 7.2-11.7 | 33 / 16 | 25 | L24 | 20 | **1911540000** |
| KSG M20 BN 0 NI 2 G20 | M 20 / 1.5 | 9.6-14 | 33 / 16 | 30 | L30 | 20 | **1911560000** |
| KSG M25 BN 0 NI 2 G25 | M 25 / 1.5 | 13.5-20 | 33 / 16 | 38 | L38 | 20 | **1911570000** |
| KSG M32 BN 0 NI 2 G32 | M 32 / 1.5 | 19.5-26.3 | 33 / 16 | 46 | L46 | 10 | **1911580000** |
| KSG M40 BN 0 NI 2 G40 | M 40 / 1.5 | 23-32.2 | 37 / 16 | 55 | L55 | 10 | **1911590000** |
| KSG M50 BN 0 NI 2 G50S | M 50 / 1.5 | 28.2-38.2 | 37 / 16 | 65 | L65 | 1 | **1911600000** |
| KSG M50 BN 0 NI 2 G50 | M 50 / 1.5 | 33.2-44.1 | 37 / 16 | 65 | L65 | 1 | **1911610000** |
| KSG M63 BN 0 NI 2 G63S | M 63 / 1.5 | 39.3-50.1 | 37 / 19 | 80 | L80 | 1 | **1911620000** |
| KSG M63 BN 0 NI 2 G63 | M 63 / 1.5 | 46.7-56 | 37 / 19 | 80 | L80 | 1 | **1911630000** |
| KSG M75 BN 0 NI 2 G75 | M 75 / 1.5 | 58.1-68 | 37 / 19 | 90 | L90 | 1 | **1075360000** |
| KSG M75 BN 0 NI 2 G75S | M 75 / 1.5 | 52.3-62 | 37 / 19 | 90 | L90 | 1 | **1075350000** |

**Note**
- All cable glands have a thread pitch of 1.5 mm.
- In the case of Ex d applications, the inner threads used for cable glands must meet the requirements of section 5.3 of EN/IEC 60079-1. In the screwed in position, at least 5 threads must be engaged.
- If the cable glands are installed in non-metallic Ex e connection equipment, these must be connected to the protective earth of the system.
- The connection cable must be laid securely and inflexibly to rule out tensile stress.

## Klippon® cable glands - Brass - Ex e, Ex d, IP 66 / IP 68 for non-armoured cables

Cable gland exclusively for non-armoured cables and lines.

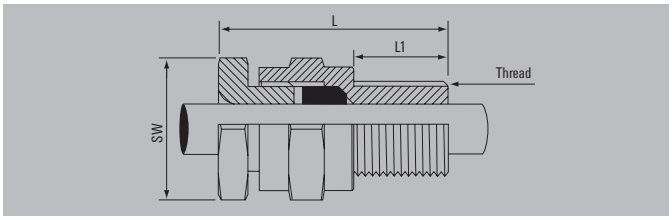


## Technical data

| | |
|---|---|
| Material | Brass |
| O-ring / Seal insert | Silicone / Silicone |
| Temperature range | -60 °C...180 °C |
| Degree of protection | IP 66, IP 68 - 2.5 bar |
| Water depth | 25 m (30 Min.) |
| Approval | ATEX II 2 GD, Ex d IIC / Ex e II / Ex tD A21 IP68, IECEx Ex d IIC / Ex e II |

**Note**

## Ordering data

| Typ | Thread | KB | L/L1 | SW | SUHB | Qty. | Order No. |
|---|---|---|---|---|---|---|---|
| **metric, brass** | | | | | | | |
| KSG M20 BS O SC 2 G16 | M 20 / 1.5 | 4-8.4 | 33 / 16 | 25 | L24 | 20 | **0930481212** |
| KSG M20 BS O SC 2 G20 | M 20 / 1.5 | 9.6-14 | 33 / 16 | 30 | L30 | 20 | **0930501212** |
| KSG M20 BS O SC 2 G20S | M 20 / 1.5 | 7.2-11.7 | 33 / 16 | 25 | L24 | 20 | **1136720000** |
| KSG M25 BS O SC 2 G25 | M 25 / 1.5 | 13.5-20 | 33 / 16 | 38 | L38 | 20 | **0930511212** |
| KSG M32 BS O SC 2 G32 | M 32 / 1.5 | 19.5-26.3 | 33 / 16 | 46 | L46 | 10 | **0930521212** |
| KSG M40 BS O SC 2 G40 | M 40 / 1.5 | 23-32.2 | 37 / 16 | 55 | L55 | 10 | **0930531212** |
| KSG M50 BS O SC 2 G50 | M 50 / 1.5 | 33.2-44.1 | 37 / 16 | 65 | L65 | 1 | **0930551212** |
| KSG M50 BS O SC 2 G50S | M 50 / 1.5 | 28.2-38.2 | 37 / 16 | 65 | L65 | 1 | **1136730000** |
| KSG M63 BS O SC 2 G63 | M 63 / 1.5 | 46.7-56 | 37 / 19 | 80 | L80 | 1 | **1136750000** |
| KSG M63 BS O SC 2 G63S | M 63 / 1.5 | 39.3-50.1 | 37 / 19 | 80 | L80 | 1 | **1136740000** |
| KSG M75 BS O SC 2 G75 | M 75 / 1.5 | 58.1-68 | 37 / 19 | 90 | L90 | 1 | **1136770000** |
| KSG M75 BS O SC 2 G75S | M 75 / 1.5 | 52.3-62 | 37 / 19 | 90 | L90 | 1 | **1136760000** |
| **metric, nickel-plated brass** | | | | | | | |
| KSG M20 BS O NI 2 G16 | M 20 / 1.5 | 4-8.4 | 33 / 16 | 25 | L24 | 20 | **0930481222** |
| KSG M20 BS O NI 2 G20 | M 20 / 1.5 | 9.6-14 | 33 / 16 | 25 | L30 | 20 | **0930501222** |
| KSG M20 BS O NI 2 G20S | M 20 / 1.5 | 7.2-11.7 | 33 / 16 | 25 | L24 | 20 | **0930491224** |
| KSG M25 BS O NI 2 G25 | M 25 / 1.5 | 13.5-20 | 33 / 16 | 38 | L38 | 20 | **0930511222** |
| KSG M32 BS O NI 2 G32 | M 32 / 1.5 | 19.5-26.3 | 33 / 16 | 46 | L46 | 10 | **0930521222** |
| KSG M40 BS O NI 2 G40 | M 40 / 1.5 | 23-32.2 | 37 / 16 | 55 | L55 | 10 | **0930531222** |
| KSG M50 BS O NI 2 G50 | M 50 / 1.5 | 33.2-44.1 | 37 / 16 | 65 | L65 | 1 | **1136670000** |
| KSG M50 BS O NI 2 G50S | M 50 / 1.5 | 28.2-38.2 | 37 / 16 | 65 | L65 | 1 | **1136660000** |
| KSG M63 BS O NI 2 G63 | M 63 / 1.5 | 46.7-56 | 37 / 19 | 80 | L80 | 1 | **1136690000** |
| KSG M63 BS O NI 2 G63S | M 63 / 1.5 | 39.3-50.1 | 37 / 19 | 80 | L80 | 1 | **1136680000** |
| KSG M75 BS O NI 2 G75 | M 75 / 1.5 | 58.1-68 | 37 / 19 | 90 | L90 | 1 | **1136710000** |
| KSG M75 BS O NI 2 G75S | M 75 / 1.5 | 52.3-62 | 37 / 19 | 90 | L90 | 1 | **1136700000** |

**Note**

- All cable glands have a thread pitch of 1.5 mm.
- In the case of Ex d applications, the inner threads used for cable glands must meet the requirements of section 5.3 of EN/IEC 60079-1. In the screwed in position, at least 5 threads must be engaged.
- If the cable glands are installed in non-metallic Ex e connection equipment, these must be connected to the protective earth of the system.
- The connection cable must be laid securely and inflexibly to rule out tensile stress.

## Klippon® cable glands - Brass - Ex d, IP 68 for armoured and non-armoured encapsulated cables

Barrier cable glands for cables and lines with a single-wire, metal-foil armouring, and braided armouring for Ex-d IIC enclosure, with a volume of more than two litres.

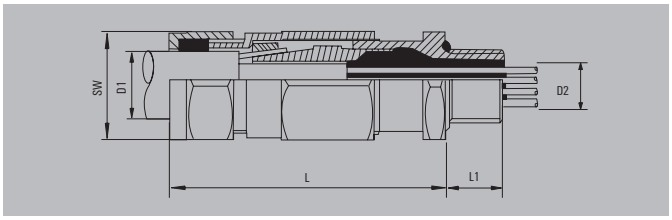


### Technical data

| | |
|---|---|
| Material | Brass |
| O-ring / Seal insert | Silicone / CR |
| Temperature range | -60 °C...85 °C |
| Degree of protection | IP 68 - 10 bar |
| Water depth | 100 m (30 Min.) |
| Type of armouring | Single-wire armouring, Metal foil armouring, Braided armouring |
| Encapsulation compound | Processing temperature at 21°C, the sealing compound is hardened after one hour, After 4 hours, the cable gland can be installed and initial commissioning can take place |
| Approval | ATEX II 2 GD, Ex d IIC / Ex tD A21 IP68, I M2 Ex d I, IECEx Ex d IIC / Ex d I |
| **Note** | |

### Ordering data

| Typ | Thread | D1 outer cable Ø | D2 inner cable Ø | L/L1 | SW | SUHB | Qty. | Order No. |
|---|---|---|---|---|---|---|---|---|
| **metric, brass** | | | | | | | | |
| KUB M20 BS 0 SC 1 G16 | M 20 / 1.5 | 6.70-16.00 | 14.00 | 72 / 16 | 24 | L24 | 20 | **1095340000** |
| KUB M20 BS 0 SC 2 G16 | M 20 / 1.5 | 9.00-17.60 | 11.70 | 72 / 16 | 24 | L24 | 20 | **1095350000** |
| KUB M20 BS 0 SC 1 G20S | M 20 / 1.5 | 9.40-10.30 | 11.70 | 72 / 16 | 24 | L24 | 20 | **1095360000** |
| KUB M20 BS 0 SC 2 G20S | M 20 / 1.5 | 11.50-21.10 | 11.70 | 72 / 16 | 24 | L24 | 20 | **1095370000** |
| KUB M20 BS 0 SC 1 G20 | M 20 / 1.5 | 12.00-13.50 | 11.70 | 73 / 16 | 30 | EL30 | 20 | **1095380000** |
| KUB M20 BS 0 SC 2 G20 | M 20 / 1.5 | 15.50-12.50 | 14.00 | 73 / 16 | 30 | EL30 | 20 | **1095390000** |
| KUB M25 BS 0 SC 1 G25 | M 25 / 1.5 | 16.80-23.90 | 20.00 | 83 / 16 | 38 | EL38 | 20 | **1095400000** |
| KUB M25 BS 0 SC 2 G25 | M 25 / 1.5 | 20.30-27.40 | 20.00 | 83 / 16 | 38 | EL38 | 20 | **1095410000** |
| KUB M32 BS 0 SC 1 G32 | M 32 / 1.5 | 23.20-30.50 | 26.30 | 103 / 16 | 46 | EL46 | 10 | **1095420000** |
| KUB M32 BS 0 SC 2 G32 | M 32 / 1.5 | 26.70-34.00 | 26.30 | 103 / 16 | 46 | EL46 | 10 | **1095430000** |
| KUB M40 BS 0 SC 1 G40 | M 40 / 1.5 | 28.60-36.20 | 32.20 | 105 / 16 | 55 | EL55 | 10 | **1095440000** |
| KUB M40 BS 0 SC 2 G40 | M 40 / 1.5 | 33.00-46.70 | 38.20 | 105 / 16 | 55 | EL55 | 10 | **1095450000** |
| KUB M50 BS 0 SC 1 G50S | M 50 / 1.5 | 34.80-48.50 | 44.10 | 115 / 16 | 65 | EL65 | 1 | **1095460000** |
| KUB M50 BS 0 SC 2 G50S | M 50 / 1.5 | 39.40-59.50 | 50.10 | 115 / 16 | 65 | EL65 | 1 | **1095470000** |
| KUB M50 BS 0 SC 1 G50 | M 50 / 1.5 | 41.10-40.60 | 32.20 | 115 / 16 | 65 | EL65 | 1 | **1095480000** |
| KUB M50 BS 0 SC 2 G50 | M 50 / 1.5 | 45.70-42.40 | 38.20 | 115 / 16 | 65 | EL65 | 1 | **1095490000** |
| KUB M63 BS 0 SC 1 G63S | M 63 / 1.5 | 47.50-61.20 | 56.00 | 115 / 19 | 80 | EL80 | 1 | **1095500000** |
| KUB M63 BS 0 SC 2 G63S | M 63 / 1.5 | 52.10-72.20 | 62.00 | 115 / 19 | 80 | EL80 | 1 | **1095510000** |
| KUB M63 BS 0 SC 1 G63 | M 63 / 1.5 | 53.80-53.20 | 44.10 | 115 / 19 | 80 | EL80 | 1 | **1095520000** |
| KUB M63 BS 0 SC 2 G63 | M 63 / 1.5 | 58.40-54.80 | 50.10 | 115 / 19 | 80 | EL80 | 1 | **1095530000** |
| KUB M75 BS 0 SC 1 G75S | M 75 / 1.5 | 60.20-73.40 | 68.00 | 122 / 19 | 90 | EL90 | 1 | **1095540000** |
| KUB M75 BS 0 SC 2 G75S | M 75 / 1.5 | 64.80-78.00 | 68.00 | 122 / 19 | 90 | EL90 | 1 | **1095550000** |
| KUB M75 BS 0 SC 1 G75 | M 75 / 1.5 | 66.50-65.80 | 56.00 | 122 / 19 | 90 | EL90 | 1 | **1095560000** |
| KUB M75 BS 0 SC 2 G75 | M 75 / 1.5 | 71.10-68.00 | 62.00 | 122 / 19 | 90 | EL90 | 1 | **1095570000** |

**Note**
- All cable glands have a thread pitch of 1.5 mm.
- In the case of Ex d applications, the inner threads used for cable glands must meet the requirements of section 5.3 of EN/IEC 60079-1. In the screwed in position, at least 5 threads must be engaged.
- The connection cable must be laid securely and inflexibly to rule out tensile stress.

## Klippon® cable glands - Brass - Ex d, IP 68 for armoured and non-armoured encapsulated cables

Barrier cable glands for cables and lines with a single-wire, metal-foil armouring, and braided armouring for Ex-d IIC enclosure, with a volume of more than two litres.

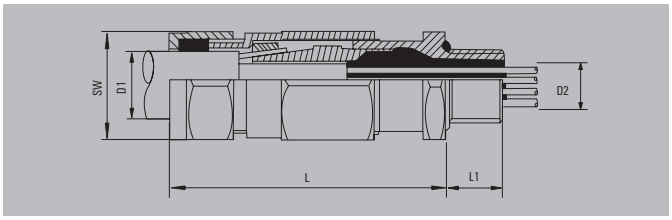




### Technical data

| | |
|---|---|
| Material | Brass, nickel-plated |
| O-ring / Seal insert | Silicone / Silicone |
| Temperature range | -60 °C...85 °C |
| Degree of protection | IP 68 - 10 bar |
| Water depth | 100 m (30 Min.) |
| Type of armouring | Single-wire armouring, Metal foil armouring, Braided armouring |
| Encapsulation compound | Processing temperature at 21°C, the sealing compound is hardened after one hour, After 4 hours, the cable gland can be installed and initial commissioning can take place |
| Approval | ATEX II 2 GD, Ex d IIC / Ex tD A21 IP68, I M2 Ex d I, IECEx Ex d IIC / Ex d I |
| **Note** | |

### Ordering data

| Typ | Thread | D1 outer cable Ø | D2 inner cable Ø | L/L1 | SW | SUHB | Qty. | Order No. |
|---|---|---|---|---|---|---|---|---|
| **metric, nickel-plated brass** | | | | | | | | |
| KUB M20 BS 0 NI 1 G16 | M 20 / 1.5 | 6.70-10.30 | 11.70 | 72 / 16 | 24 | L24 | 20 | **1095100000** |
| KUB M20 BS 0 NI 2 G16 | M 20 / 1.5 | 9.00-13.50 | 11.70 | 72 / 16 | 24 | L24 | 20 | **1095110000** |
| KUB M20 BS 0 NI 1 G20 | M 20 / 1.5 | 12.00-17.60 | 11.70 | 73 / 16 | 30 | EL30 | 20 | **1095140000** |
| KUB M20 BS 0 NI 2 G20 | M 20 / 1.5 | 15.50-21.10 | 11.70 | 73 / 16 | 30 | EL30 | 20 | **1095150000** |
| KUB M20 BS 0 NI 1 G20S | M 20 / 1.5 | 9.40-12.50 | 14.00 | 72 / 16 | 24 | L24 | 20 | **1095120000** |
| KUB M20 BS 0 NI 2 G20S | M 20 / 1.5 | 11.50-16.00 | 14.00 | 72 / 16 | 24 | L24 | 20 | **1095130000** |
| KUB M25 BS 0 NI 1 G25 | M 25 / 1.5 | 16.80-23.90 | 20.00 | 83 / 16 | 38 | EL38 | 20 | **1095160000** |
| KUB M25 BS 0 NI 2 G25 | M 25 / 1.5 | 20.30-27.40 | 20.00 | 83 / 16 | 38 | EL38 | 20 | **1095170000** |
| KUB M32 BS 0 NI 1 G32 | M 32 / 1.5 | 23.20-30.50 | 26.30 | 103 / 16 | 46 | EL46 | 10 | **1095180000** |
| KUB M32 BS 0 NI 2 G32 | M 32 / 1.5 | 26.70-34.00 | 26.30 | 103 / 16 | 46 | EL46 | 10 | **1095190000** |
| KUB M40 BS 0 NI 1 G40 | M 40 / 1.5 | 28.60-36.20 | 32.20 | 105 / 16 | 55 | EL55 | 10 | **1095200000** |
| KUB M40 BS 0 NI 2 G40 | M 40 / 1.5 | 33.00-40.60 | 32.20 | 105 / 16 | 55 | EL55 | 10 | **1095210000** |
| KUB M50 BS 0 NI 1 G50 | M 50 / 1.5 | 41.10-48.50 | 44.10 | 115 / 16 | 65 | EL65 | 1 | **1095240000** |
| KUB M50 BN 0 NI 2 G50 | M 50 / 1.5 | 45.70-53.20 | 44.10 | 115 / 16 | 65 | EL65 | 1 | **1095250000** |
| KUB M50 BS 0 NI 1 G50S | M 50 / 1.5 | 34.80-42.40 | 38.20 | 115 / 16 | 65 | EL65 | 1 | **1095220000** |
| KUB M50 BS 0 NI 2 G50S | M 50 / 1.5 | 39.40-46.70 | 38.20 | 115 / 16 | 65 | EL65 | 1 | **1095230000** |
| KUB M63 BS 0 NI 1 G63 | M 63 / 1.5 | 53.80-61.20 | 56.00 | 115 / 19 | 80 | EL80 | 1 | **1095280000** |
| KUB M63 BS 0 NI 2 G63 | M 63 / 1.5 | 58.40-65.80 | 56.00 | 115 / 19 | 80 | EL80 | 1 | **1095290000** |
| KUB M63 BS 0 NI 1 G63S | M 63 / 1.5 | 47.50-54.80 | 50.10 | 115 / 19 | 80 | EL80 | 1 | **1095260000** |
| KUB M63 BS 0 NI 2 G63S | M 63 / 1.5 | 52.10-59.50 | 50.10 | 115 / 19 | 80 | EL80 | 1 | **1095270000** |
| KUB M75 BS 0 NI 1 G75 | M 75 / 1.5 | 66.50-73.40 | 68.00 | 122 / 19 | 90 | EL90 | 1 | **1095320000** |
| KUB M75 BS 0 NI 2 G75 | M 75 / 1.5 | 71.10-78.00 | 68.00 | 122 / 19 | 90 | EL90 | 1 | **1095330000** |
| KUB M75 BS 0 NI 1 G75S | M 75 / 1.5 | 60.20-68.00 | 62.00 | 122 / 19 | 90 | EL90 | 1 | **1095300000** |
| KUB M75 BS 0 NI 2 G75S | M 75 / 1.5 | 64.80-72.20 | 62.00 | 122 / 19 | 90 | EL90 | 1 | **1095310000** |

**Note**
- All cable glands have a thread pitch of 1.5 mm.
- In the case of Ex d applications, the inner threads used for cable glands must meet the requirements of section 5.3 of EN/IEC 60079-1. In the screwed in position, at least 5 threads must be engaged.
- The connection cable must be laid securely and inflexibly to rule out tensile stress.

## Lock nuts - Plastic 7035

Lock nuts with collar for preventing enclosure damage on installation. These are used to secure plastic cable glands and sealing plugs.

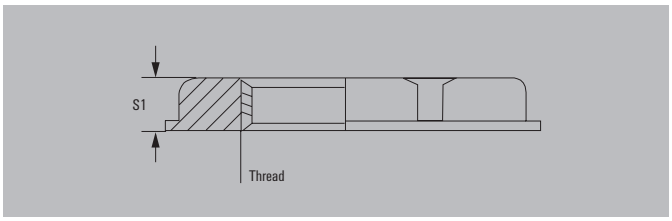


## Technical data

| | |
|---|---|
| Material / Colour | Polyamid 6 (PA6 - GF30) / RAL 7035 |
| Temperature range | -20 °C...80 °C |
| Flammability rating | V-2 |

**Note**

## Ordering data

| Typ | Thread | S1 | SW | Qty. | Order No. |
|---|---|---|---|---|---|
| **metric** | | | | | |
| SKMU M12 - K GR | M 12 / 1.5 | 5.00 | 18 | 100 | **1772440000** |
| SKMU M16 - K GR | M 16 / 1.5 | 5.00 | 22 | 100 | **1772450000** |
| SKMU M20 - K GR | M 20 / 1.5 | 6.00 | 26 | 100 | **1772460000** |
| SKMU M25 - K GR | M 25 / 1.5 | 6.00 | 32 | 100 | **1772470000** |
| SKMU M32 - K GR | M 32 / 1.5 | 7.00 | 41 | 100 | **1772480000** |
| SKMU M40 - K GR | M 40 / 1.5 | 7.00 | 50 | 50 | **1772490000** |
| SKMU M50 - K GR | M 50 / 1.5 | 8.00 | 60 | 10 | **1772500000** |
| SKMU M63 - K GR | M 63 / 1.5 | 8.00 | 75 | 10 | **1772510000** |
| **PG** | | | | | |
| SKMU PG7-K GR | PG 7 | 5.00 | 19 | 100 | **1697440000** |
| SKMU PG9-K GR | PG 9 | 5.00 | 22 | 100 | **1697450000** |
| SKMU PG11-K GR | PG 11 | 5.00 | 24 | 100 | **1697460000** |
| SKMU PG 13.5-K GR | PG 13.5 | 6.00 | 27 | 100 | **1697470000** |
| SKMU PG16-K GR | PG 16 | 6.00 | 30 | 100 | **1697480000** |
| SKMU PG21-K GR | PG 21 | 7.00 | 36 | 100 | **1698220000** |
| SKMU PG29-K GR | PG 29 | 7.00 | 46 | 50 | **1698230000** |
| SKMU PG36-K GR | PG 36 | 8.00 | 60 | 25 | **1698240000** |
| SKMU PG42-K GR | PG 42 | 8.00 | 65 | 25 | **1698250000** |
| SKMU PG48-K GR | PG 48 | 8.00 | 70 | 25 | **1719090000** |

**Note** Further versions on request

## Lock nuts - Plastic 9005

Lock nuts with collar for preventing enclosure damage on installation. These are used to secure plastic cable glands and sealing plugs - recommended for Ex e and Ex i plastic cable glands.

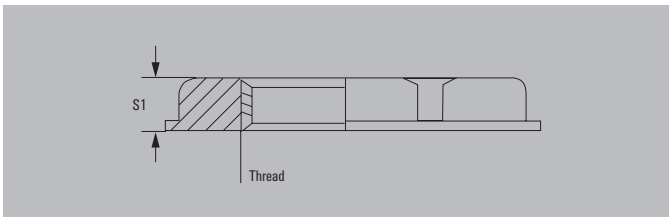


### Technical data

| | |
|---|---|
| Material / Colour | Polyamid 6 (PA6 - GF30) / RAL 9005 |
| Temperature range | -20 °C...80 °C |
| Flammability rating | V-2 |

**Note**

### Ordering data

| Typ | Thread | S1 | SW | Qty. | Order No. |
|---|---|---|---|---|---|
| **metric** | | | | | |
| SKMU M12-K SW | M 12 / 1.5 | 5.00 | 18 | 100 | **1806540000** |
| SKMU M16 K SW | M 16 / 1.5 | 5.00 | 22 | 100 | **1736920000** |
| SKMU M20 K SW | M 20 / 1.5 | 6.00 | 26 | 100 | **1736930000** |
| SKMU M25 K SW | M 25 / 1.5 | 6.00 | 32 | 25 | **1736940000** |
| SKMU M32 K SW | M 32 / 1.5 | 7.00 | 41 | 100 | **1736950000** |
| SKMU M40 K SW | M 40 / 1.5 | 7.00 | 50 | 10 | **1736960000** |
| SKMU M50 K SW | M 50 / 1.5 | 8.00 | 60 | 5 | **1736970000** |
| SKMU M63 K SW | M 63 / 1.5 | 8.00 | 75 | 5 | **1736980000** |
| **PG** | | | | | |
| SKMU PG7-K SW | PG 7 | 5.00 | 19 | 50 | **1719100000** |
| SKMU PG9-K SW | PG 9 | 5.00 | 22 | 50 | **1719110000** |
| SKMU PG11-K SW | PG 11 | 5.00 | 24 | 50 | **1719120000** |
| SKMU PG13.5-K SW | PG 13.5 | 6.00 | 27 | 50 | **1719130000** |
| SKMU PG16-K SW | PG 16 | 6.00 | 30 | 25 | **1719140000** |
| SKMU PG21-K SW | PG 21 | 7.00 | 36 | 20 | **1719150000** |
| SKMU PG29-K SW | PG 29 | 7.00 | 46 | 20 | **1719160000** |
| SKMU PG36-K SW | PG 36 | 8.00 | 60 | 10 | **1719170000** |
| SKMU PG42-K SW | PG 42 | 8.00 | 65 | 10 | **1719180000** |
| SKMU PG48-K SW | PG 48 | 8.00 | 70 | 5 | **1719190000** |

**Note**

## Lock nuts - Brass - Nickel-plated

A lock nut is used to secure the brass cable glands and sealing plugs – also recommended when working with Ex applications.

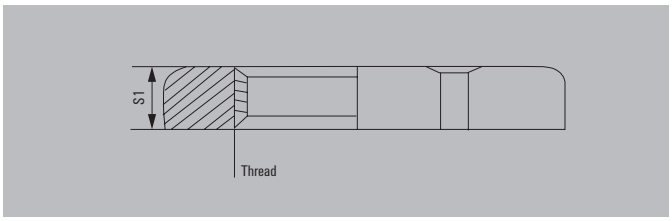


## Technical data

| | |
|---|---|
| Material | Brass, nickel-plated |

**Note**

## Ordering data

| Typ | Thread | S1 | SW | Qty. | Order No. |
|---|---|---|---|---|---|
| **metric** | | | | | |
| SKMU M12 - MS | M 12 / 1.5 | 2.8 | 14 | 50 | **1772360000** |
| SKMU M16 MS | M 16 / 1.5 | 2.8 | 19 | 50 | **1736990000** |
| SKMU M20 MS | M 20 / 1.5 | 3 | 24 | 50 | **1737000000** |
| SKMU M25 MS | M 25 / 1.5 | 3 | 28 | 25 | **1737010000** |
| SKMU M32 MS | M 32 / 1.5 | 4 | 36 | 20 | **1737020000** |
| SKMU M40 MS | M 40 / 1.5 | 4.5 | 44 | 10 | **1737030000** |
| SKMU M50 MS | M 50 / 1.5 | 5 | 54 | 5 | **1737040000** |
| SKMU M63 MS | M 63 / 1.5 | 6 | 70 | 5 | **1737050000** |
| SKMU M75 MS | M 75 / 1.5 | 8 | 85 | 5 | **1737060000** |
| **PG** | | | | | |
| SKMU PG7-MS | PG 7 | 2.8 | 15 | 100 | **1694070000** |
| SKMU PG9-MS | PG 9 | 2.8 | 18 | 100 | **1694080000** |
| SKMU PG11-MS | PG 11 | 3 | 21 | 100 | **1694090000** |
| SKMU PG13.5-MS | PG 13.5 | 3 | 23 | 100 | **1694100000** |
| SKMU PG16-MS | PG 16 | 3 | 26 | 100 | **1694110000** |
| SKMU PG21-MS | PG 21 | 3.5 | 32 | 50 | **1719200000** |
| SKMU PG29-MS | PG 29 | 4 | 41 | 50 | **1719210000** |
| SKMU PG36-MS | PG 36 | 5 | 51 | 50 | **1719220000** |
| SKMU PG42-MS | PG 42 | 5 | 60 | 50 | **1719230000** |
| SKMU PG48-MS | PG 48 | 5.5 | 64 | 50 | **1719240000** |

**Note** Further versions on request

## Lock nuts - Brass - Natural

A lock nut made from untreated brass is used to secure the brass cable glands and sealing plugs – also recommended when working with Ex applications.

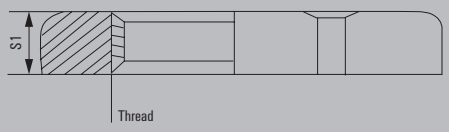


## Technical data

| | |
|---|---|
| Material | Brass |

**Note**

## Ordering data

| Typ | Thread | S1 | SW | Qty. | Order No. |
|---|---|---|---|---|---|
| **metric** | | | | | |
| SKMU M16 MS SC | M 16 / 1.5 | 4 | 22 | 50 | **0930640001** |
| SKMU M20 MS SC | M 20 / 1.5 | 4 | 24 | 50 | **0930640002** |
| SKMU M25 MS SC | M 25 / 1.5 | 4 | 30 | 25 | **0930640003** |
| SKMU M32 MS SC | M 32 / 1.5 | 4 | 40 | 20 | **0930640004** |
| SKMU M40 MS SC | M 40 / 1.5 | 4.5 | 50 | 10 | **0930640005** |
| SKMU M50 MS SC | M 50 / 1.5 | 5 | 65 | 5 | **0930640006** |
| SKMU M63 MS SC | M 63 / 1.5 | 6.5 | 75 | 5 | **0930640007** |
| SKMU M75 MS SC | M 75 / 1.5 | 7 | 90 | 5 | **0930640008** |
| SKMU M80 MS SC | M 80 / 1.5 | 7 | 90 | 5 | **0930640009** |
| SKMU M85 MS SC | M 85 / 1.5 | 7 | 104.8 | 5 | **0930640010** |
| SKMU M90 MS SC | M 90 / 1.5 | 7 | 104.8 | 5 | **0930640011** |

**Note**

## Lock nuts - Brass - EMC

Serrated locks are used for securing brass cable glands and sealing plugs – specially equipped with 6 edges which contact the enclosure when the lock nut is tightened.

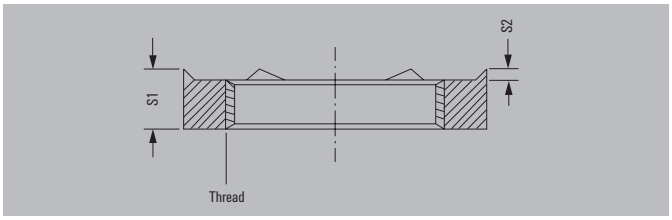


### Technical data

| | |
|---|---|
| Material | Brass, nickel-plated |

**Note**

### Ordering data

| Typ | Thread | S1 | SW | Qty. | Order No. |
|---|---|---|---|---|---|
| **metric** | | | | | |
| SKMU EMV M12 | M 12 / 1.5 | 3.6 | 15 | 50 | **1777610000** |
| SKMU EMV M16 | M 16 / 1.5 | 3.6 | 19 | 50 | **1777620000** |
| SKMU EMV M20 | M 20 / 1.5 | 3.6 | 24 | 50 | **1777630000** |
| SKMU EMV M25 | M 25 / 1.5 | 3.6 | 30 | 20 | **1777640000** |
| SKMU EMV M32 | M 32 / 1.5 | 4.1 | 36 | 20 | **1777650000** |
| SKMU EMV M40 | M 40 / 1.5 | 4.6 | 46 | 10 | **1777660000** |
| SKMU EMV M50 | M 50 / 1.5 | 4.6 | 60 | 10 | **1777670000** |
| SKMU EMV M63 | M 63 / 1.5 | 6.6 | 70 | 10 | **1777680000** |
| **PG** | | | | | |
| SKMU EMV PG7 | PG 7 | 4.7 | 15 | 20 | **1718900000** |
| SKMU EMV PG9 | PG 9 | 4.7 | 18 | 20 | **1718910000** |
| SKMU EMV PG11 | PG 11 | 4.7 | 21 | 20 | **1718920000** |
| SKMU EMV PG13.5 | PG 13.5 | 4.7 | 23 | 10 | **1718930000** |
| SKMU EMV PG16 | PG 16 | 4.7 | 26 | 10 | **1718940000** |
| SKMU EMV PG21 | PG 21 | 5.2 | 32 | 10 | **1718950000** |
| SKMU EMV PG29 | PG 29 | 5.7 | 41 | 15 | **1718960000** |
| SKMU EMV PG 36 | PG 36 | 4.6 | 51 | 1 | **1777710000** |
| SKMU EMV PG 42 | PG 42 | 4.6 | 58 | 1 | **1777700000** |
| SKMU EMV PG 48 | PG 48 | 5.6 | 64 | 1 | **1777690000** |

**Note** Further versions on request

## Flat IP washer - Standard - Polyethylene

Flat IP washer for increasing the degree of protection for cable glands and sealing plugs.
The IP washer is also suitable as a replacement for O-rings.

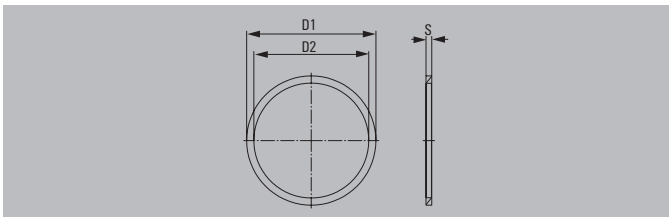


## Technical data

| | |
|---|---|
| Material / Colour | Polyethylene / Transparent |
| Temperature range | -30 °C...90 °C |

**Note**

## Ordering data

| Typ | Thread | D1 | D2 | S | Qty. | Order No. |
|---|---|---|---|---|---|---|
| **metric** | | | | | | |
| GWDR M12-PO | M 12 / 1.5 | 16.00 | 12.00 | 1.50 | 50 | **1777920000** |
| GWDR M16-PO | M 16 / 1.5 | 20.00 | 16.00 | 1.50 | 50 | **1777930000** |
| GWDR M20-PO | M 20 / 1.5 | 25.00 | 20.40 | 2.00 | 100 | **1777940000** |
| GWDR M25-PO | M 25 / 1.5 | 30.00 | 25.00 | 2.00 | 50 | **1777950000** |
| GWDR M32-PO | M 32 / 1.5 | 38.00 | 32.00 | 2.00 | 50 | **1777960000** |
| GWDR M40-PO | M 40 / 1.5 | 45.00 | 40.00 | 2.00 | 50 | **1777970000** |
| GWDR M50-PO | M 50 / 1.5 | 56.00 | 50.00 | 2.00 | 50 | **1777980000** |
| GWDR M63-PO | M 63 / 1.5 | 70.00 | 63.00 | 2.00 | 50 | **1777990000** |
| **PG** | | | | | | |
| GWDR PG7-PO | PG 7 | 16.50 | 12.50 | 1.60 | 100 | **1719440000** |
| GWDR PG9-PO | PG 9 | 19.00 | 15.20 | 1.60 | 100 | **1719450000** |
| GWDR PG11-PO | PG 11 | 22.50 | 18.60 | 1.80 | 100 | **1719460000** |
| GWDR PG13.5-PO | PG 13.5 | 25.00 | 20.40 | 1.80 | 100 | **1719470000** |
| GWDR PG16-PO | PG 16 | 27.00 | 22.50 | 1.80 | 100 | **1719480000** |
| GWDR PG21-PO | PG 21 | 33.50 | 28.30 | 2.20 | 100 | **1719490000** |
| GWDR PG29-PO | PG 29 | 43.50 | 37.00 | 2.20 | 50 | **1719500000** |
| GWDR PG36-PO | PG 36 | 55.00 | 47.00 | 2.70 | 50 | **1719510000** |
| GWDR PG42-PO | PG 42 | 63.00 | 54.00 | 3.20 | 10 | **1719520000** |
| GWDR PG48-PO | PG 48 | 69.00 | 59.30 | 3.20 | 5 | **1719530000** |

**Note** Further versions on request

## Flat gasket seals - Standard - Neoprene

Flat gasket seal to increase the degree of protection for cable glands and sealing plugs – recommended for use in Ex applications. The seal is also suitable as a replacement for O-rings.

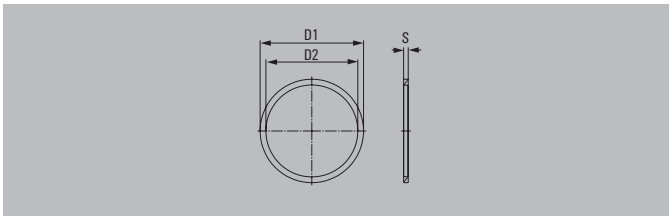


## Technical data

| | |
|---|---|
| Material / Colour | Neoprene / RAL 9005 |
| Temperature range | -30 °C...100 °C |

**Note**

## Ordering data

| Typ | Thread | D1 | D2 | S | Qty. | Order No. |
|---|---|---|---|---|---|---|
| **metric** | | | | | | |
| GWDR M12-NP | M 12 / 1.5 | 18.00 | 12.00 | 1.20 | 50 | **1913320000** |
| GWDR M16-NP | M 16 / 1.5 | 22.00 | 16.00 | 1.20 | 50 | **1736230000** |
| GWDR M20-NP | M 20 / 1.5 | 24.00 | 20.00 | 1.20 | 50 | **1736240000** |
| GWDR M25-NP | M 25 / 1.5 | 30.00 | 25.00 | 1.50 | 50 | **1736250000** |
| GWDR M32-NP | M 32 / 1.5 | 42.00 | 32.00 | 1.50 | 50 | **1736260000** |
| GWDR M40-NP | M 40 / 1.5 | 52.00 | 40.00 | 1.50 | 20 | **1736270000** |
| GWDR M50-NP | M 50 / 1.5 | 63.00 | 50.00 | 1.50 | 20 | **1736280000** |
| GWDR M63-NP | M 63 / 1.5 | 77.00 | 63.00 | 2.00 | 10 | **1736290000** |
| **PG** | | | | | | |
| GWDR PG7-NP | PG 7 | 17.00 | 11.60 | 1.20 | 100 | **1719540000** |
| GWDR PG9-NP | PG 9 | 21.00 | 14.00 | 1.20 | 100 | **1719550000** |
| GWDR PG11-NP | PG 11 | 24.00 | 17.00 | 1.20 | 100 | **1719560000** |
| GWDR PG13.5-NP | PG 13.5 | 27.00 | 19.50 | 1.20 | 100 | **1719570000** |
| GWDR PG16-NP | PG 16 | 30.00 | 22.50 | 1.20 | 100 | **1719580000** |
| GWDR PG21-NP | PG 21 | 35.00 | 28.30 | 1.50 | 100 | **1719590000** |
| GWDR PG29-NP | PG 29 | 45.00 | 37.00 | 1.50 | 50 | **1719600000** |
| GWDR PG36-NP | PG 36 | 60.00 | 47.00 | 1.50 | 20 | **1719610000** |
| GWDR PG42-NP | PG 42 | 65.00 | 54.00 | 1.50 | 10 | **1719620000** |
| GWDR PG48-NP | PG 48 | 71.00 | 59.30 | 1.50 | 5 | **1719630000** |

**Note** Further versions on request

## Flat IP washer - Standard - Nylon

Flat nylon IP washer, used for sealing large surfaces, for example around cable glands on enclosures.

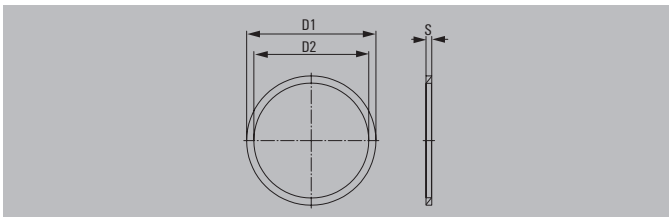


## Technical data

| | |
|---|---|
| Material / Colour | Nylon 6 / RAL 3020 |
| Temperature range | -40 °C...135 °C |

**Note**

## Ordering data

| Typ | Thread | D1 | D2 | S | Qty. | Order No. |
|---|---|---|---|---|---|---|
| **metric** | | | | | | |
| KSWN M16 | M 16 / 1.5 | 25.00 | 16.50 | 2.00 | 25 | **1076630000** |
| KSWN M20 | M 20 / 1.5 | 29.40 | 20.70 | 2.00 | 25 | **0930730002** |
| KSWN M25 | M 25 / 1.5 | 38.10 | 25.70 | 2.00 | 25 | **1076640000** |
| KSWN M32 | M 32 / 1.5 | 42.50 | 32.50 | 2.00 | 25 | **1076650000** |
| KSWN M40 | M 40 / 1.5 | 52.00 | 40.50 | 2.00 | 25 | **0899780000** |
| KSWN M50 | M 50 / 1.5 | 65.00 | 50.50 | 2.00 | 25 | **0900660000** |
| KSWN M63 | M 63 / 1.5 | 79.40 | 63.50 | 2.00 | 25 | **1076660000** |
| KSWN M75 | M 75 / 1.5 | 90.50 | 75.50 | 2.00 | 25 | **1076670000** |

**Note**

## Flat IP washer - Standard - Vulcanised fibre

Flat nylon IP washer made from vulcanised fibre, used for sealing large surfaces, for example around cable glands on enclosures.

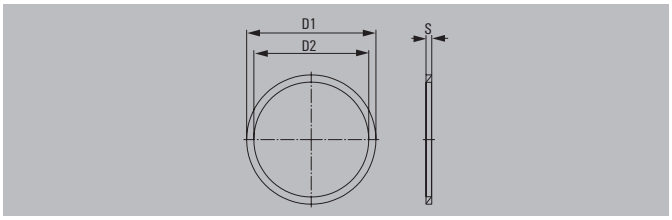


## Technical data

| | |
|---|---|
| Material / Colour | Vulcanized fibre / RAL 3011 |
| Temperature range | -40 °C...95 °C |

**Note**

## Ordering data

| Typ | Thread | D1 | D2 | S | Qty. | Order No. |
|---|---|---|---|---|---|---|
| **metric** | | | | | | |
| KSWF M16 | M 16 / 1.5 | 25.00 | 16.50 | 2.00 | 25 | **1076680000** |
| KSWF M20 | M 20 / 1.5 | 29.40 | 20.70 | 2.00 | 25 | **0899750000** |
| KSWF M25 | M 25 / 1.5 | 38.10 | 25.70 | 2.00 | 25 | **0899770000** |
| KSWF M32 | M 32 / 1.5 | 42.50 | 32.50 | 2.00 | 25 | **1076690000** |
| KSWF M40 | M 40 / 1.5 | 52.00 | 40.50 | 2.00 | 25 | **1076710000** |
| KSWF M50 | M 50 / 1.5 | 65.00 | 50.50 | 2.00 | 25 | **1076720000** |
| KSWF M63 | M 63 / 1.5 | 79.40 | 63.50 | 2.00 | 25 | **1076730000** |
| KSWF M75 | M 75 / 1.5 | 90.50 | 75.50 | 2.00 | 25 | **1076740000** |
| KSWF M90 | M 90 / 1.5 | 114.30 | 90.50 | 2.00 | 25 | **1192820000** |

**Note**

## Accessories - Earth tags - Brass - Nickel plated

Earth tags are best used when a cable shielding is being tightened onto the cable gland, and when it has the same potential as another cable gland on the enclosure.

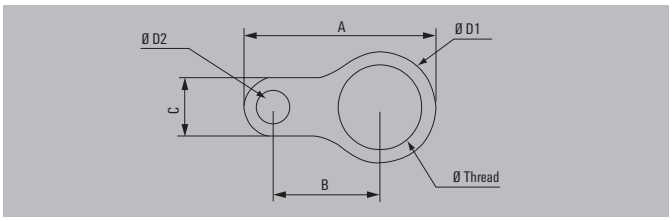


### Technical data

| | |
|---|---|
| Material | Brass, nickel-plated |

**Note**

### Ordering data

| Typ | Thread | A | B | C | D1 | D2 | Qty. | Order No. |
|---|---|---|---|---|---|---|---|---|
| **metric** | | | | | | | | |
| EA-RING MS/M 16 | M 16 / 1.5 | 48.75 | 30.00 | 13.00 | 24.50 | 6.75 | 20 | **1736480000** |
| EA-RING MS/M 20 | M 20 / 1.5 | 53.8 | 33.00 | 13.00 | 28.60 | 7.00 | 20 | **1736490000** |
| EA-RING MS/M 25 | M 25 / 1.5 | 61.5 | 36.00 | 17.00 | 34.00 | 10.50 | 20 | **1736500000** |
| EA-RING MS/M 32 | M 32 / 1.5 | 73 | 41.00 | 22.00 | 42.00 | 12.20 | 20 | **1736510000** |
| EA-RING MS/M 40 | M 40 / 1.5 | 86.5 | 44.50 | 30.00 | 54.00 | 13.50 | 10 | **1736520000** |
| EA-RING MS/M 50 | M 50 / 1.5 | 111.5 | 58.00 | 40.00 | 67.00 | 13.50 | 10 | **1736530000** |
| EA-RING MS/M 63 | M 63 / 1.5 | 125.5 | 67.00 | 40.00 | 77.00 | 13.50 | 10 | **1736540000** |
| EA-RING MS/M 75 | M 75 / 1.5 | 137.5 | 73.00 | 40.00 | 89.00 | 13.50 | 10 | **1736550000** |

**Note** Further versions on request

## Accessories - Earth tags - Brass - Natural

Earth tags are best used when a cable shielding is being tightened onto the cable gland, and when it has the same potential as another cable gland on the enclosure.

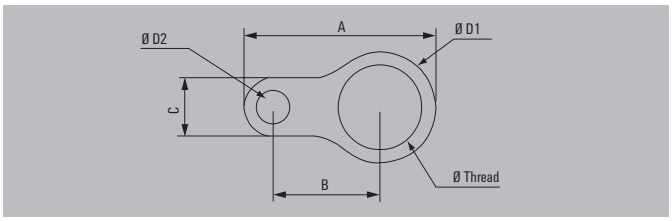


### Technical data

| | |
|---|---|
| Material | Brass |

**Note**

### Ordering data

| Typ | Thread | A | B | C | D1 | D2 | Qty. | Order No. |
|---|---|---|---|---|---|---|---|---|
| **metric** | | | | | | | | |
| EA-RING MS/M16 SC | M 16 / 1.5 | 50.8 | 31.80 | 12.80 | 16.30 | 6.90 | 20 | **0930710001** |
| EA-RING MS/M20 SC | M 20 / 1.5 | 54 | 33.00 | 12.80 | 21.80 | 6.90 | 20 | **0930710002** |
| EA-RING MS/M25 SC | M 25 / 1.5 | 60.2 | 36.50 | 12.80 | 27.30 | 6.90 | 20 | **0930710003** |
| EA-RING MS/M32 SC | M 32 / 1.5 | 74.6 | 42.50 | 22.30 | 33.80 | 11.80 | 20 | **0930710004** |
| EA-RING MS/M40 SC | M 40 / 1.5 | 86.7 | 45.50 | 31.70 | 42.70 | 13.50 | 10 | **0930710005** |
| EA-RING MS/M50 SC | M 50 / 1.5 | 111 | 58.10 | 41.30 | 50.70 | 13.50 | 10 | **0930710006** |
| EA-RING MS/M63 SC | M 63 / 1.5 | 128.7 | 66.80 | 41.30 | 63.50 | 13.50 | 10 | **0930710007** |
| EA-RING MS/M75 SC | M 75 / 1.5 | 141.3 | 73.00 | 41.30 | 76.30 | 13.50 | 10 | **0930710008** |

**Note** Other versions on request

## Accessories - Shrouds - PVC

The cover shroud a cable gland before and after the installation. It also protects against external environmental influences.

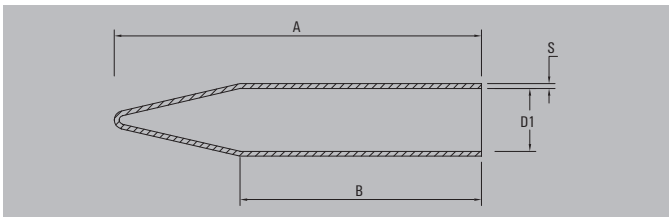


## Technical data

| | |
|---|---|
| Material / Colour | PVC / RAL 9005 |
| Temperature range | -25 °C...70 °C |
| Hardness [Shore A] | 65 |

**Note**

## Ordering data

| Typ | A | B | D1 | S | Qty. | Order No. |
|---|---|---|---|---|---|---|
| **metric** | | | | | | |
| KSP L24 | 120 | 70.00 | 25.00 | 1.50 | 10 | **1736570000** |
| KSP L30 | 110 | 55.00 | 30.00 | 1.50 | 10 | **1736580000** |
| KSP L38 | 160 | 60.00 | 37.00 | 1.50 | 10 | **1736590000** |
| KSP L46 | 160 | 60.00 | 46.00 | 1.50 | 10 | **1736600000** |
| KSP L55 | 160 | 60.00 | 55.00 | 1.50 | 10 | **1736610000** |
| KSP L65 | 210 | 70.00 | 65.00 | 1.50 | 10 | **1736620000** |
| KSP L80 | 240 | 90.00 | 80.00 | 1.50 | 10 | **1736630000** |
| KSP L90 | 240 | 90.00 | 90.00 | 1.50 | 10 | **1736640000** |
| KSP EL30* | 127.5 | 75.00 | 30.00 | 1.50 | 10 | **1736670000** |
| KSP EL38* | 168 | 80.00 | 38.00 | 1.50 | 10 | **1736680000** |
| KSP EL46* | 198 | 95.00 | 46.00 | 1.50 | 10 | **1076750000** |
| KSP EL55* | 210 | 105.00 | 55.00 | 1.50 | 10 | **1076760000** |
| KSP EL65* | 250 | 115.00 | 65.00 | 1.50 | 10 | **1076770000** |
| KSP EL80* | 270 | 115.00 | 80.00 | 2.00 | 10 | **1076780000** |
| KSP EL90* | 285 | 120.00 | 90.00 | 2.00 | 10 | **1076790000** |

**Note** *These shrouds have been specially designed for the Klippon® KDSU and Klippon® KUB cable glands.

## Accessories - Shrouds - Silicone

The cover shroud a cable gland before and after the installation. It also protects against external environmental influences.

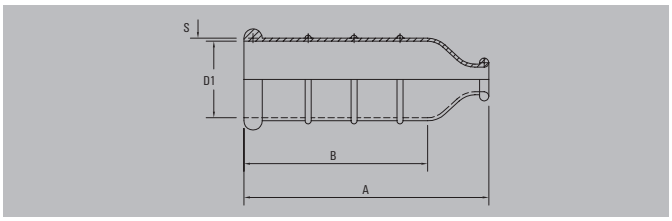


## Technical data

| | |
|---|---|
| Material / Colour | Silicone / RAL 5015 |
| Temperature range | -60 °C...200 °C |
| Hardness [IRHD] | 65 |

**Note**

## Ordering data

| Typ | A | B | D1 | S | Qty. | Order No. |
|---|---|---|---|---|---|---|
| **metric** | | | | | | |
| KSP L24 S | 80 | 60.00 | 25.00 | 1.50 | 10 | **0930700001** |
| KSP L30 S | 80 | 60.00 | 30.00 | 1.50 | 10 | **0930700002** |
| KSP L38 S | 85 | 65.00 | 37.00 | 1.50 | 10 | **0930700003** |
| KSP L46 S | 95 | 70.00 | 46.00 | 1.50 | 10 | **0930700004** |
| KSP L55 S | 95 | 70.00 | 55.00 | 1.50 | 10 | **0930700005** |
| KSP L65 S | 110 | 80.00 | 65.00 | 1.50 | 10 | **0930700006** |
| KSP L80 S | 120 | 90.00 | 80.00 | 1.50 | 10 | **0930700007** |
| KSP L90 S | 140 | 110.00 | 90.00 | 1.50 | 10 | **0930700008** |
| KSP L 104 S | 160 | 130.00 | 104.00 | 1.50 | 10 | **1193940000** |
| KSP L114 S | 180 | 150.00 | 114.00 | 1.50 | 10 | **1192790000** |

**Note**

## Accessories - Serrated washers, Stainless steel

Serrated stainless steel washers to prevent mounted cable glands from loosening.

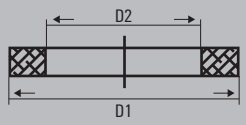


## Technical data

| | |
|---|---|
| Material | Stainless steel 1.4404 (316L) |

**Note**

## Ordering data

| Typ | Thread | D1 | D2 | Qty. | Order No. |
|---|---|---|---|---|---|
| **metric** | | | | | |
| SZS M16 | M 16 / 1.5 | 25.50 | 17.30 | 50 | **1736300000** |
| SZS M20 | M 20 / 1.5 | 32.40 | 21.30 | 10 | **1736310000** |
| SZS M25 | M 25 / 1.5 | 37.40 | 25.30 | 10 | **1736320000** |
| SZS M32 | M 32 / 1.5 | 48.00 | 33.00 | 20 | **1736330000** |
| SZS M40 | M 40 / 1.5 | 60.00 | 41.00 | 5 | **1736340000** |
| SZS M50 | M 50 / 1.5 | 71.00 | 51.00 | 5 | **1736350000** |
| SZS M63 | M 63 / 1.5 | 87.00 | 64.00 | 5 | **1736360000** |

**Note**

## Sealing plugs - Plastic

Plastic sealing plug with cross-head is used to seal surplus threaded holes and to maintain the IP protection degree.

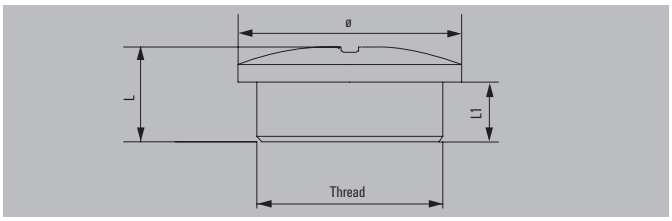


## Technical data

| | |
|---|---|
| Material / Colour | Polyamid 6 (PA6 - GF30) / RAL 7035 |
| Temperature range | -40 °C...100 °C |
| Protection degree | IP 54 |
| Flammability rating | V-2 |

| | |
|---|---|
| **Note** | Optional sealing ring |

## Ordering data

| Typ | Thread | L | L1 | Head Ø | Qty. | Order No. |
|---|---|---|---|---|---|---|
| **metric** | | | | | | |
| VP M12 K54 | M 12 / 1.5 | 5.5 | 6 | 15.00 | 100 | **1776930000** |
| VP M16 K54 | M 16 / 1.5 | 5.5 | 7 | 20.00 | 100 | **1776920000** |
| VP M20 K54 | M 20 / 1.5 | 6.5 | 7 | 24.00 | 100 | **1776910000** |
| VP M25 K54 | M 25 / 1.5 | 7 | 10 | 30.00 | 100 | **1776900000** |
| VP M32 K54 | M 32 / 1.5 | 7 | 11 | 37.00 | 100 | **1776940000** |
| VP M40 K54 | M 40 / 1.5 | 7 | 13 | 46.00 | 50 | **1776950000** |
| VP M50 K54 | M 50 / 1.5 | 8.5 | 14 | 56.00 | 25 | **1776960000** |
| VP M63 K54 | M 63 / 1.5 | 8.5 | 15 | 69.50 | 50 | **1776970000** |
| **PG** | | | | | | |
| VP 7-K54 | PG 7 | 8 | 6 | 15.00 | 50 | **1719250000** |
| VP 9-K54 | PG 9 | 9.5 | 5 | 19.00 | 100 | **0294760000** |
| VP 11-K54 | PG 11 | 10 | 6.5 | 22.00 | 100 | **0294860000** |
| VP 13.5-K54 | PG 13.5 | 10 | 5 | 25.00 | 100 | **0294960000** |
| VP 16-K54 | PG 16 | 10 | 5 | 27.00 | 100 | **0295060000** |
| VP 21-K54 | PG 21 | 12 | 8 | 33.00 | 100 | **0295160000** |
| VP 29-K54 | PG 29 | 11.5 | 8 | 44.00 | 50 | **0501160000** |
| VP 36-K54 | PG 36 | 14 | 10 | 55.00 | 25 | **0501260000** |
| VP 42-K54 | PG 42 | 14 | 10 | 62.00 | 10 | **0501360000** |
| VP 48-K54 | PG 48 | 16 | 12 | 69.00 | 5 | **1719260000** |

| | |
|---|---|
| **Note** | Other versions available on request. The sealing plugs must be tightened „hand-tight" with the screwdriver. |

## Sealing plugs - Brass - Nickel-plated

Brass sealing plug with cross-head is used to seal surplus threaded holes and to maintain the IP protection degree.

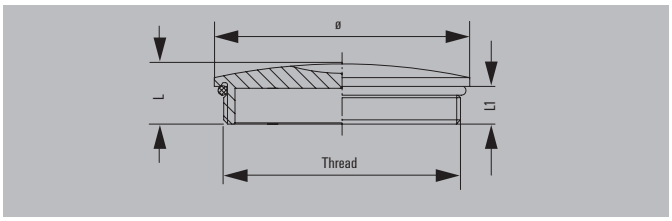


## Technical data

| | |
|---|---|
| Material | Brass, nickel-plated |
| O-Ring | NBR |
| Temperature range | -40 °C...100 °C |
| Protection degree | IP 68 |

**Note**

## Ordering data

| Typ | Thread | L | L1 | Head Ø | Qty. | Order No. |
|---|---|---|---|---|---|---|
| **metric** | | | | | | |
| VP M12-MS65 | M 12 / 1.5 | 5 | 5 | 14.00 | 100 | **1777720000** |
| VP M16-MS65 | M 16 / 1.5 | 8 | 5 | 18.00 | 100 | **1777730000** |
| VP M20-MS65 | M 20 / 1.5 | 9.5 | 6.5 | 22.00 | 100 | **1777740000** |
| VP M25-MS65 | M 25 / 1.5 | 11 | 7 | 28.00 | 100 | **1777750000** |
| VP M32-MS65 | M 32 / 1.5 | 12 | 8 | 35.00 | 50 | **1777760000** |
| VP M40-MS65 | M 40 / 1.5 | 13 | 8 | 44.00 | 50 | **1777770000** |
| VP M50-MS65 | M 50 / 1.5 | 15 | 9 | 54.00 | 25 | **1777780000** |
| VP M63-MS65 | M 63 / 1.5 | 16 | 10 | 67.00 | 10 | **1777790000** |
| **PG** | | | | | | |
| VP 7-MS65 | PG 7 | 7.5 | 5 | 15.00 | 100 | **0521600000** |
| VP 9-MS65 | PG 9 | 8 | 5 | 18.00 | 100 | **0294700000** |
| VP 11-MS65 | PG 11 | 8 | 5 | 22.00 | 100 | **0294800000** |
| VP 13.5-MS65 | PG 13.5 | 9 | 6 | 24.00 | 100 | **0294900000** |
| VP 16-MS65 | PG 16 | 9 | 6 | 26.00 | 100 | **0295000000** |
| VP 21-MS65 | PG 21 | 10 | 6 | 32.00 | 100 | **0295100000** |
| VP 29-MS65 | PG 29 | 12 | 8 | 40.00 | 50 | **0501100000** |
| VP 36-MS65 | PG 36 | 15 | 9 | 50.00 | 25 | **0501200000** |
| VP 42-MS65 | PG 42 | 16 | 10 | 57.00 | 10 | **0501300000** |
| VP 48-MS65 | PG 48 | 16 | 10 | 64.00 | 5 | **1719270000** |

**Note** Other versions available on request. The sealing plugs must be tightened „hand-tight" with the screwdriver.

## Sealing plugs - Plastic - Ex e

Sealing plug with cross-head is used to seal surplus threaded holes and to maintain the IP protection degree – especially for Ex-e Ex applications.

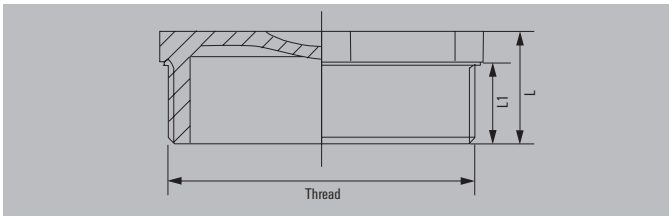


### Technical data

| | |
|---|---|
| Material / Colour | Polyamide / RAL 9005 |
| Temperature range | -20 °C...80 °C |
| Protection degree | IP 66 |
| Protection degree with GWDR | IP 68 |
| UL 94 flammability rating | V-2 |
| Approval | II 2 GD, Ex d IIC, Ex e II, Ex tD |

**Note** Optional sealing ring

### Ordering data

| Typ | Thread | L | L1 | SW | Qty. | Order No. |
|---|---|---|---|---|---|---|
| **metric** | | | | | | |
| VP M16-EXE SW | M 16 / 1.5 | 19 | 15 | 19 | 50 | **1737070000** |
| VP M20-EXE SW | M 20 / 1.5 | 19 | 15 | 23 | 50 | **1737080000** |
| VP M25-EXE SW | M 25 / 1.5 | 20 | 15 | 28 | 100 | **1737090000** |
| VP M32-EXE SW | M 32 / 1.5 | 20.5 | 15 | 36 | 20 | **1737100000** |
| VP M40-EXE SW | M 40 / 1.5 | 20.5 | 15 | 44 | 10 | **1737110000** |
| VP M50-EXE SW | M 50 / 1.5 | 21 | 15 | 54 | 5 | **1737120000** |
| VP M63-EXE SW | M 63 / 1.5 | 23.5 | 15 | 67 | 5 | **1737130000** |

**Note** Refer to the enclosed installation instructions for the tightening torque.

## Sealing plugs - Brass - Ex e, Ex d

Sealing plug is used for sealing surplus threaded holes to ensure the IP protection degree - especially for Ex-e and Ex-d applications.

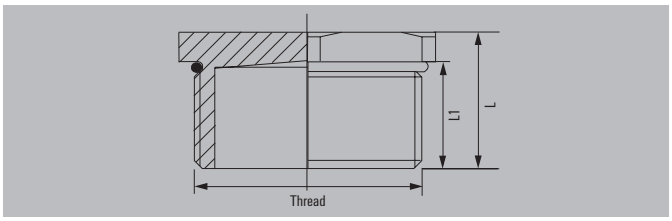


## Technical data

| | |
|---|---|
| Material | Brass, nickel-plated |
| O-Ring | NBR |
| Temperature range | -40 °C...100 °C |
| Protection degree | IP 68 |
| Approval | II 2 GD, Ex d IIC, Ex e II, Ex tD |

**Note**

## Ordering data

| Typ | Thread | L | L1 | SW | Qty. | Order No. |
|---|---|---|---|---|---|---|
| **metric** | | | | | | |
| VP M16 EXE MS | M 16 / 1.5 | 15 | 12 | 17 | 50 | **1210890000** |
| VP M20 EXE MS | M 20 / 1.5 | 15 | 12 | 23 | 50 | **1210900000** |
| VP M25 EXE MS | M 25 / 1.5 | 15.5 | 12 | 29 | 25 | **1210910000** |
| VP M32 EXE MS | M 32 / 1.5 | 16 | 12 | 39 | 10 | **1210920000** |
| VP M40 EXE MS | M 40 / 1.5 | 19 | 15 | 45 | 10 | **1210930000** |
| VP M50 EXE MS | M 50 / 1.5 | 20 | 15 | 58 | 5 | **1210940000** |
| VP M63 EXE MS | M 63 / 1.5 | 26 | 19 | 70 | 5 | **1210950000** |

**Note** Refer to the enclosed installation instructions for the tightening torque.

## Sealing plugs - Brass - Ex e, Ex d, IP 54

Sealing plug with accessible hexagon recess. It is used to seal unused threaded holes so that cable glands can be connected in the future. Approved for use with the pressure-resistant Ex d encapsulation.

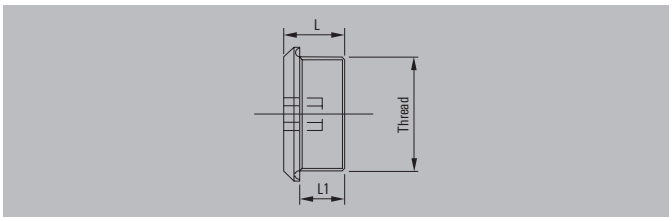


### Technical data

| | |
|---|---|
| Material | Brass, nickel-plated |
| Temperature range | -50 °C...180 °C |
| Protection degree | IP 54 |
| Approval | ATEX I M2 II 2 GD Ex d I/IIC Mb Gb Ex tb IIIDb IP6X, IECEx Ex d I/IIC & Ex e I/IIC MbGb Ex tb IIC Db IP6X |

**Note**

### Ordering data

| Typ | Thread | L1 | Qty. | Order No. |
|---|---|---|---|---|
| **metric** | | | | |
| KSPA M16 BNI | M 16 | 16 | 20 | **0887490000** |
| KSPA M20 BNI | M 20 | 16 | 20 | **0886670000** |
| KSPA M25 BNI | M 25 | 16 | 20 | **0886680000** |
| KSPA M32 BNI | M 32 | 16 | 10 | **0886690000** |
| KSPA M40 BNI | M 40 | 16 | 10 | **0886700000** |
| KSPA M50 BNI | M 50 | 16 | 1 | **0886710000** |
| KSPA M63 BNI | M 63 | 16 | 1 | **1075370000** |
| KSPA M75 BNI | M 75 | 16 | 1 | **1075380000** |

**Note**

## Sealing plugs - Brass and Stainless steel - Ex e, Ex d, IP 66 / IP 68

Dome head sealing plug with accessible hexagon recess. It is used to seal unused threaded holes so that cable glands can be connected in the future. Available in brass and stainless steel. Approved for use with the pressure-resistant Ex d encapsulation and increased safety Ex e.

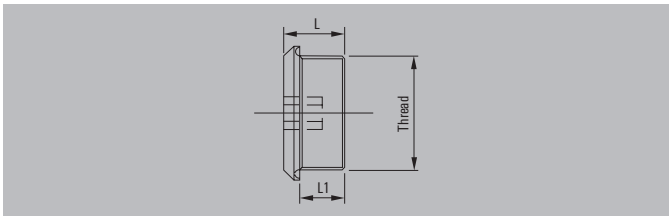


### Technical data

| | |
|---|---|
| O-Ring | NBR |
| Temperature range | -30 °C...100 °C |
| Protection degree | IP 66, IP 68 |
| Approval | ATEX I M2 II 2 GD Ex dI/IIC Mb Gb Ex e I/IIC Mb Gb Ex tb IIIC Db IP6X, IECEx Ex d I/IIC & Ex e I/IIC MbGb Ex tb IIC Db IP6X |

**Note**

### Ordering data

| Typ | Thread | L | L1 | Qty. | Order No. |
|---|---|---|---|---|---|
| **Stainless steel** | | | | | |
| KSPM M16 SSC | M 16 | 21.5 | 16 | 20 | **0887500000** |
| KSPM M20 SSC | M 20 | 21.5 | 16 | 20 | **0886720000** |
| KSPM M25 SSC | M 25 | 21.5 | 16 | 20 | **0886730000** |
| KSPM M32 SSC | M 32 | 21.5 | 16 | 10 | **0886740000** |
| KSPM M40 SSC | M 40 | 21.5 | 16 | 10 | **0886750000** |
| KSPM M50 SSC | M 50 | 21.5 | 16 | 1 | **1075510000** |
| KSPM M63 SSC | M 63 | 21.5 | 16 | 1 | **1075520000** |
| KSPM M75 SSC | M 75 | 21.5 | 16 | 1 | **1075530000** |
| **brass** | | | | | |
| KSPM M16 BSC | M 16 | 21.5 | 16 | 20 | **0887480000** |
| KSPM M20 BSC | M 20 | 21.5 | 16 | 20 | **0885410000** |
| KSPM M25 BSC | M 25 | 21.5 | 16 | 20 | **0885420000** |
| KSPM M32 BSC | M 32 | 21.5 | 16 | 10 | **0885430000** |
| KSPM M40 BSC | M 40 | 21.5 | 16 | 10 | **0885440000** |
| KSPM M50 BSC | M 50 | 21.5 | 16 | 1 | **0885450000** |
| KSPM M63 BSC | M 63 | 21.5 | 16 | 1 | **1075480000** |
| KSPM M75 BSC | M 75 | 21.5 | 16 | 1 | **1075490000** |

**Note**

## Sealing plugs - Plastic - Ex e, IP 66

Sealing plugs with accessible hexagon recess, made from glass-fibre-reinforced nylon. They are used to seal unused threaded holes so that cable glands can be connected in the future – also recommended for Ex applications.

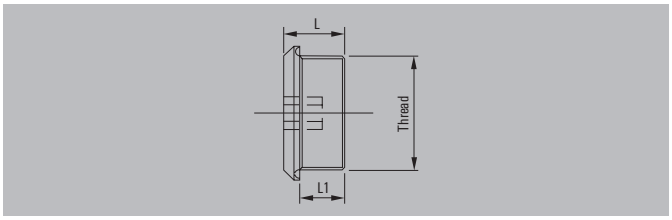


### Technical data

| | |
|---|---|
| Material | Nylon |
| O-Ring | NBR |
| Temperature range | -20 °C...40 °C |
| Protection degree | IP 66 |
| Approval | II 2 GD, Ex e IIC Gb, Ex tb IIIC Db, IP6X |

**Note**

### Ordering data

| Typ | Thread | L | L1 | Qty. | Order No. |
|---|---|---|---|---|---|
| **metric** | | | | | |
| KSPM M16 PL | M 16 / 1.5 | 21.5 | 16 | 20 | **1209890000** |
| KSPM M20 PL | M 20 / 1.5 | 21.5 | 16 | 20 | **1209910000** |
| KSPM M25 PL | M 25 / 1.5 | 21.5 | 16 | 20 | **1209920000** |
| KSPM M32 PL | M 32 / 1.5 | 21.5 | 16 | 10 | **1209930000** |
| KSPM M40 PL | M 40 / 1.5 | 21.5 | 16 | 10 | **1209940000** |
| KSPM M50 PL | M 50 / 1.5 | 21.5 | 16 | 1 | **1209950000** |

**Note**

## Adaptors with NPT male threads

Adaptors can be used to connect threaded holes and cable glands of different thread sizes and types.

## Technical data

| | |
|---|---|
| Material | Brass, nickel-plated |
| Temperature range | -40 °C...100 °C |
| Protection degree | IP 54 |
| Approval | II 2 GD, Ex d IIC, Ex e II, Ex tD |

## Ordering data

| External thread | 1/2" NPT | 3/4" NPT | 1" NPT | 1 1/4" NPT | 1 1/2" NPT | 2" NPT | 2 1/2" NPT | 3" NPT |
|---|---|---|---|---|---|---|---|---|
| Inner thread | Order No. | Order No. | Order No. | Order No. | Order No. | Order No. | Order No. | Order No. |
| M16 | 1737490000 | | | | | 1737440000 | 1737430000 | 1737420000 |
| M20 | 1737650000 | 1737640000 | 1737630000 | | | 1737600000 | 1737590000 | 1737580000 |
| M25 | 1737810000 | 1737800000 | 1737790000 | | | 1737760000 | 1737750000 | 1737740000 |
| M32 | | 1737950000 | | | | 1737910000 | 1737900000 | 1737890000 |
| M40 | | | 1738070000 | | | 1738040000 | 1738030000 | 1738020000 |
| M50 | | | | | | 1738150000 | 1738140000 | 1738130000 |
| M63 | | | | | | 1738240000 | 1738230000 | 1738220000 |
| M75 | | | | | | 1738310000 | 1738300000 | 1738290000 |
| 1/2" NPT | 1738410000 | 1738400000 | 1738390000 | 1738380000 | 1738370000 | 1738360000 | 1738350000 | 1738340000 |
| 3/4" NPT | 1738570000 | 1738560000 | 1738550000 | 1738540000 | 1738530000 | 1738520000 | 1738510000 | 1738500000 |
| 1" NPT | | | 1738700000 | 1738690000 | 1738680000 | 1738670000 | 1738660000 | 1738650000 |
| 1 1/4" NPT | | | 1738820000 | 1738810000 | 1738800000 | 1738790000 | 1738780000 | 1738770000 |
| 1 1/2" NPT | | | | 1738920000 | 1738910000 | 1738900000 | 1738890000 | 1738880000 |
| 2" NPT | | | | | | 1738990000 | 1738980000 | 1738970000 |
| 2 1/2" NPT | | | | | | 1739060000 | 1739050000 | 1739040000 |
| 3" NPT | | | | | | | 1739100000 | 1739090000 |

**Note** Qty. = 1

## Adaptors with metric male threads

Adaptors can be used to connect threaded holes and cable glands of different thread sizes and types.



## Technical data

| | |
|---|---|
| Material | Brass, nickel-plated |
| Temperature range | -40 °C...100 °C |
| Protection degree | IP 54 |
| Approval | II 2 GD, Ex d IIC, Ex e II, Ex tD |

## Ordering data

| External thread | M 16 | M 20 | M 25 | M 32 | M 40 | M 50 | M 63 | M 75 |
|---|---|---|---|---|---|---|---|---|
| Inner thread | Order No. | Order No. | Order No. | Order No. | Order No. | Order No. | Order No. | Order No. |
| M16 | | 1737560000 | 1737550000 | 1737540000 | 1737530000 | 1737520000 | 1737510000 | 1737500000 |
| M20 | 1737730000 | 1737720000 | 1737710000 | 1737700000 | 1737690000 | 1737680000 | 1737670000 | 1737660000 |
| M25 | | 1737880000 | | 1737860000 | 1737850000 | 1737840000 | 1737830000 | 1737820000 |
| M32 | | | 1738010000 | | 1737990000 | 1737980000 | 1737970000 | 1737960000 |
| M40 | | | | 1738120000 | 1738110000 | 1738100000 | 1738090000 | 1738080000 |
| M50 | | | | | 1738210000 | | 1738190000 | 1738180000 |
| M75 | | | | | | 1738280000 | 1738330000 | 1738260000 |
| 1/2" NPT | | 1738480000 | | 1738460000 | 1738450000 | 1738440000 | 1738430000 | 1738420000 |
| 3/4" NPT | | 1738640000 | 1738630000 | | 1738610000 | 1738600000 | 1738590000 | 1738580000 |
| 1" NPT | | | 1738760000 | 1738750000 | 1738740000 | 1738730000 | 1738720000 | 1738710000 |
| 1 1/4" NPT | | | | 1738870000 | | 1738850000 | 1738840000 | 1738830000 |
| 1 1/2" NPT | | | | | | | 1738940000 | 1738930000 |
| 2" NPT | | | | | | | | 1739010000 |
| 2 1/2" NPT | | | | | | | 1739080000 | 1739070000 |
| 3" NPT | | | | | | | | 1739110000 |

**Note** Qty. = 1

## Compensation elements - Plastic - DAE

The DAE pressure-compensation element provides good ventilation for the enclosure and prevents moisture build-up. At the same time it maintains the high IP 69k protection level. The membrane repels water and oil.

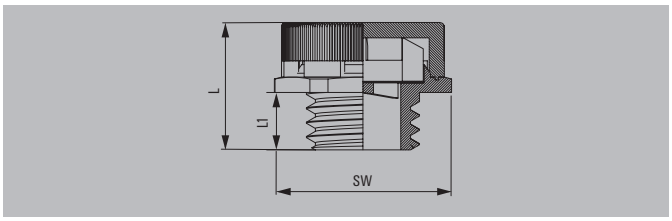


## Technical data

| | |
|---|---|
| Material / Colour | Polyamide 6 / RAL 9005 |
| O-Ring | NBR |
| Temperature range | -40 °C...105 °C |
| Protection degree | IP 66, IP 68, IP 69K |
| Air flow | 0.8 l/min at 0.1 bar ΔP, up to 7.6 l/min at 1bar ΔP |
| Wasser inlet point | > 1.5 bar |
| UL 94 flammability rating | V-2 |

**Note**

## Ordering data

| Typ | Thread | L | L1 | SW | Qty. | Order No. |
|---|---|---|---|---|---|---|
| **metric** | | | | | | |
| DAE M12 PA long | M 12 / 1.5 | 17.4 | 10 | 17 | 10 | **1868570000** |
| DAE M12 PA short | M 12 / 1.5 | 13.4 | 6 | 17 | 10 | **1868560000** |

**Note** Light grey version - RAL 7035 - on request

## Compensation elements - Stainless steel - DAE

The DAE pressure-compensation element provides good ventilation for the enclosure and prevents moisture build-up. At the same time it maintains the high IP 69k protection level. The membrane repels water and oil.

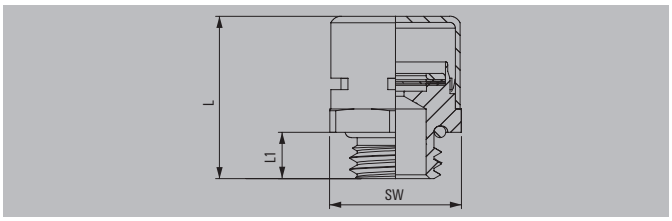


### Technical data

| | |
|---|---|
| Material | Stainless steel |
| O-Ring | NBR |
| Temperature range | -40 °C...105 °C |
| Protection degree | IP 66, IP 68, IP 69K |
| Air flow | 0.8 l/min at 0.1 bar ΔP, up to 7.6 l/min at 1bar ΔP |
| Wasser inlet point | > 1.5 bar |

**Note**

### Ordering data

| Typ | Thread | L | L1 | SW | Qty. | Order No. |
|---|---|---|---|---|---|---|
| **metric** | | | | | | |
| DAE M12 SS | M 12 / 1.5 | 21.1 | 10 | 17 | 10 | **1868550000** |
| **Note** | | | | | | |

## Compensation elements - BD 1

The BD1 compensation element can be used for enclosure ventilation and to prevent moisture build-up. It is specially designed for Ex applications.

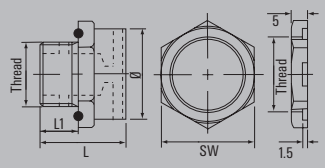


## Technical data

| | |
|---|---|
| O-Ring | NBR |
| Temperature range | -30 °C...85 °C |
| Protection degree | IP 66 |
| Filter | HDPE insert |
| Approval | Ex e II, II 2 GD |

**Note**

## Ordering data

| Typ | Thread | L | L1 | SW | Qty. | Order No. |
|---|---|---|---|---|---|---|
| **metric, brass** | | | | | | |
| BD 1 brass | M 20 / 1.5 | 25 | 10 | 29 | 1 | **3080760000** |
| **metric, stainless steel 1.4404 316L** | | | | | | |
| BD 1 ss | M 20 / 1.5 | 25 | 10 | 29 | 1 | **3080770000** |

**Note**

## Compensation elements - EWS

We recommend using the EWS drainage plug in order to drain moisture out of the enclosure. This component is not suitable for providing ventilation to the enclosure.

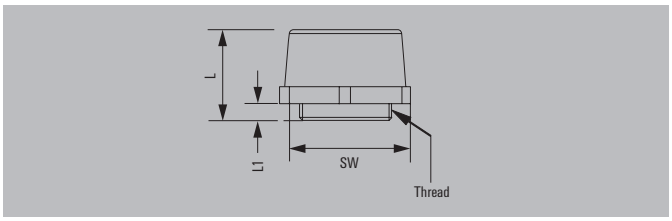


## Technical data

| | |
|---|---|
| Material / Colour | Polyamide / RAL 9005 |
| Temperature range | -20 °C...40 °C |
| Protection degree | IP 54 |
| Flammability rating | V-2 |
| Approval | Ex e II, II 2 GD |

| | |
|---|---|
| **Note** | Installed at the lowest point from the bottom in the wall of the enclosure<br>Minimum enclosure wall thickness of 4 mm must be maintained. |

## Ordering data

| Typ | Thread | L | L1 | SW | Qty. | Order No. |
|---|---|---|---|---|---|---|
| **metric** | | | | | | |
| EWS M 25X1.5 | M 25 / 1.5 | 23 | 5 | 30 | 20 | **1719740000** |
| **Note** | | | | | | |

## Breather drains – Klippon® BDX

The BDX compensating element is used for ventilating the enclosure and preventing a build up of moisture, particularly in Ex applications.

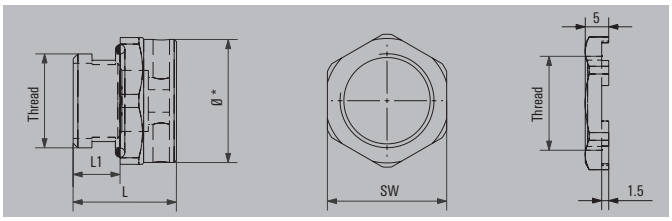


## Technical data

| | |
|---|---|
| Material | Stainless steel 1.4404 (316L) or brass CuZnPb (CZ121) |
| IP class | IP 66 |
| Impact resistance | 20 J |
| Filter | sintered bronze |
| Flow rate | 0.25 Litres per hour |
| Sealing ring | silicone O-ring |
| Temperature range | -60 °C to +200 °C |
| Plating | natural |
| Torque | 10 Nm |

**Note**
- The breather-drain is only to be fitted on the bottom side of the enclosure, aligned vertically with the thread upwards, and at the lowest point to permit proper drainage.
- Fully assembly instructions are supplied with the breather drain. The instructions must be read prior to installation and adhered to in full.
- The water flow rate has been tested by a water filled empty enclosure (no pressure or heat producing internal components). The water flow rate can slightly differ by influences from operational parameter and environmental conditions.

## Ordering data

| Type | Material | Thread | L/L1 | SW | Diameter Ø* | Order No. |
|---|---|---|---|---|---|---|
| KLIPPON BDX M20 B | brass | M20 x 1.5 | 22/10 | 27 | 26.2 | **1292540000** |
| KLIPPON BDX M20 S | stainless steel | M20 x 1.5 | 22/10 | 27 | 26.2 | **1292530000** |
| KLIPPON BDX M20X15 S | stainless steel | M20 x 1.5 | 27/15 | 27 | 26.2 | **1344630000** |
| **Note** | | | Dimensions in mm | | | |

# Cable entry system


| | | |
|---|---|---|
| **Cable entry system** | Cable entry system | D.2 |
| | Cable grommets | D.3 |
| | Cable entry strips and panels | D.4 |
| | Strain-relief strips | D.9 |
| | Separable cable gland | D.10 |

Would you prefer to connect a pre-assembled cable to an installation enclosure or cabinet, or install it later, without having to dismantle the plug or cut it from the cable?
If so, you can save time and money by using our modular Cabtite cable entry system. These systems are a combination of splittable cable entry strips or cable glands connected with clamping grommets.

The use of split, captive grommets allows different diameters to be fed into the enclosure whilst simultaneously guaranteeing IP 54 protection and strain relief. Thanks to the fact that they have the same design and dimensions, the modular components and grommets can be used in cable entry strips as well as in cable glands. The system is found particularly in measurement, power, computer lines or field bus systems in the areas of:

- Control engineering
- Switchgear cabinet manufacture
- Motor vehicle manufacture
- Systems engineering
- Mechanical engineering
- Electrical installation

## Cabtite KEL SNAP frame

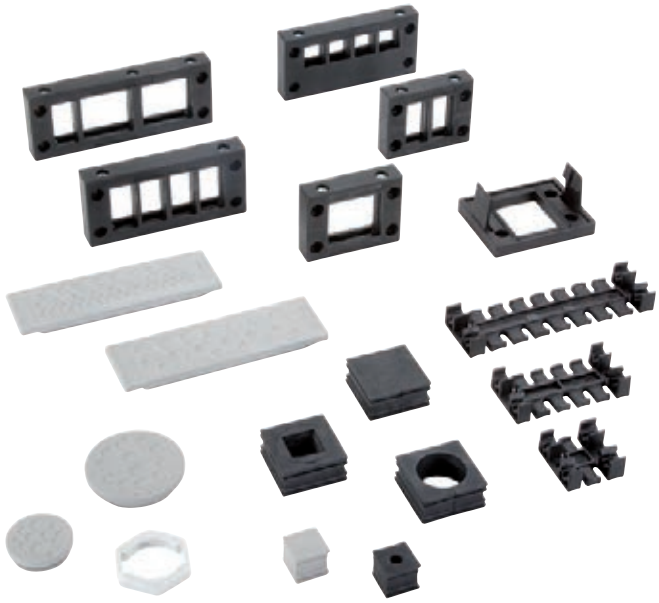

## Separable cable gland Cabtite KVT

## Cabtite sample set

Get a feel for the Cabtite system with our Cabtite sample set. It contains cable entry frames, snap frames, separable cable glands as well as diverse cable grommets.

### Ordering data

| Type | Qty. | Order No. |
|---|---|---|
| Cabtite Sample Kit | 1 | 1849780000 |

## HDC KT – Cable grommets, small

Cable grommets
for ASI cables

## HDC KT – Cable grommets, large

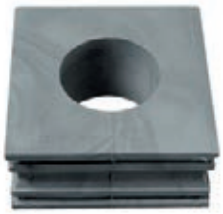

Blanking plugs

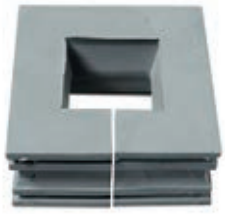

Adapter grommet

## Technical data

| | |
|---|---|
| Material, grey | Elastomers, free from halogens and silicone |
| Material, black | Elastomers with very high chemical resistance |
| Temperature range, grey | -40 °C to +90 °C (static) |
| Temperature range, black | -30 °C to +90 °C (static) |
| UL 94 flammability rating | V0 grey, HB black |

## Ordering data

| Type | Clamping range [mm] | Qty. | Order No. grey | Order No. black |
|---|---|---|---|---|
| HDC KT 3 | 3-4 | 10 | 1826460000 | 1827790000 |
| HDC KT 4 | 4-5 | 10 | 1826470000 | 1827800000 |
| HDC KT 5 | 5-6 | 10 | 1826480000 | 1827810000 |
| HDC KT 6 | 6-7 | 10 | 1826490000 | 1827830000 |
| HDC KT 7 | 7-8 | 10 | 1826500000 | 1827840000 |
| HDC KT 8 | 8-9 | 10 | 1826510000 | 1827850000 |
| HDC KT 9 | 9-10 | 10 | 1826520000 | 1827860000 |
| HDC KT 10 | 10-11 | 10 | 1826530000 | 1827870000 |
| HDC KT 11 | 11-12 | 10 | 1826540000 | 1827880000 |
| HDC KT 12 | 12-13 | 10 | 1826550000 | 1827890000 |
| HDC KT 13 | 13-14 | 10 | 1826560000 | 1827900000 |
| HDC KT 14 | 14-15 | 10 | 1826570000 | 1827910000 |
| HDC KT 15 | 15-16 | 10 | 1826580000 | 1827920000 |
| HDC KTS 16 | 16-17 | 10 | 1826590000 | 1827930000 |
| HDC KTS 17 | 17-18 | 10 | 1826600000 | 1827940000 |
| **for ASI cables** | | | | |
| HDC KT-ASI | | 10 | 1826610000 | 1828120000 |
| **2 or 4 openings** | | | | |
| HDC KT 2/4 | 2 x 4 | 10 | 1826620000 | 1828130000 |
| HDC KT 2/5 | 2 x 5 | 10 | 1826630000 | 1828140000 |
| HDC KT 2/6 | 2 x 6 | 10 | 1826640000 | 1828150000 |
| HDC KT 4/5 | 4 x 5 | 10 | 1826650000 | 1828160000 |
| **Blanking plugs, small** | | | | |
| HDC BTK | | 10 | 1828170000 | 1828200000 |

## Technical data

| | |
|---|---|
| Material, grey | Elastomers, free from halogens and silicone |
| Material, black | Elastomers with very high chemical resistance |
| Temperature range, grey | -40 °C to +90 °C (static) |
| Temperature range, black | -30 °C to +90 °C (static) |
| UL 94 flammability rating | V0 grey, HB black |

## Ordering data

| Type | Clamping range [mm] | Qty. | Order No. grey | Order No. black |
|---|---|---|---|---|
| HDC KT 16 | 16-17 | 10 | 1825950000 | 1827950000 |
| HDC KT 17 | 17-18 | 10 | 1826300000 | 1827960000 |
| HDC KT 18 | 18-19 | 10 | 1826310000 | 1827970000 |
| HDC KT 19 | 19-20 | 10 | 1826320000 | 1827980000 |
| HDC KT 20 | 20-21 | 10 | 1826330000 | 1827990000 |
| HDC KT 21 | 21-22 | 10 | 1826340000 | 1828000000 |
| HDC KT 22 | 22-23 | 10 | 1826350000 | 1828010000 |
| HDC KT 23 | 23-24 | 10 | 1826360000 | 1828020000 |
| HDC KT 24 | 24-25 | 10 | 1826370000 | 1828030000 |
| HDC KT 25 | 25-26 | 10 | 1826380000 | 1828040000 |
| HDC KT 26 | 26-27 | 10 | 1826390000 | 1828050000 |
| HDC KT 27 | 27-28 | 10 | 1826400000 | 1828060000 |
| HDC KT 28 | 28-29 | 10 | 1826410000 | 1828070000 |
| HDC KT 29 | 29-30 | 10 | 1826420000 | 1828080000 |
| HDC KT 30 | 31-32 | 10 | 1826430000 | 1828090000 |
| HDC KT 32 | 32-33 | 10 | 1826440000 | 1828100000 |
| HDC KT 34 | 33-34 | 10 | 1826450000 | 1828110000 |
| **Adapter grommet, large (for small cable grommets)** | | | | |
| HDC ATG | | 10 | 1828190000 | 1828220000 |
| **Blanking plugs, large** | | | | |
| HDC BTG | | 10 | 1828180000 | 1828210000 |

# Cabtite KEL

**Cabtite KEL**
The rectangular panel cutout frames fit exactly into the standard cutout for heavy-duty connectors. This makes it possible to accommodate up to 40 connectors in a very confined space.

- Feeds through prefabricated wiring in confined spaces.
- Two-piece, two-tier system
- Fast and easy mounting
- Standard panel cutout frames for 16 and 24 pole industrial plug-in connectors
- The predefined gap achieves a minimum class of protection of IP 54
- Large numbers of cables in very confined spaces
- Retrofitting of prefabricated wiring also possible
- The manufacturer's guarantee covering the prefabricated cables remains valid
- Integral strain relief to VDE 0619
- Locknuts ensure that working "overhead" is safe and simple

**Cabtite KEL SNAP frame**
Snap frame for mounting the cable entry frame in the switchgear cabinet.

- The KEL can be fitted quickly without tools
- The KEL need not be fitted or removed to add or remove individual cables
- The drilling pattern is identical with that of the KEL
- Seals are already integrated on both sides
- Switchgear cabinets can be fitted with KEL SNAP in advance
- KEL Snap is available for KEL 16, KEL 24 and KEL B4.

**Cabtite KEL-DP**
The Cabtite KEL-DP feed-through plate system offers an affordable alternative to standard cable glands. It is ideal when multiple cables must be connected within an installation enclosure and when IP 54 protection is adequate. Weidmüller offers this system with round and rectangular entry plates. The entry plates are simply pressed into the standard cut-outs. The position of the system is centred by means of integrated spring-loaded pins.

The advantages of this system are clear:

- High packing density
- Affordable
- Simple, tool free installation in seconds
- Very low profile

**Operating mode**

1. The grommet is fitted around the cable.
   **Important:**
   Choose an appropriately sized grommet for the diameter of the cable!

2. Press the grommet with the cable into the open cable entry frame..
   **Important:**
   The flat side of the grommet must face upwards!

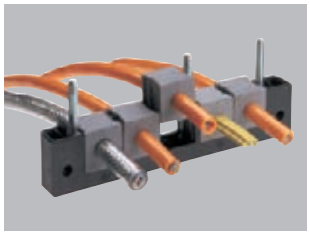

3. Assemble the two halves of the cable entry frame using the M5x50 Allen screws supplied. This achieves integral strain relief in accordance with VDE 0619 (VDE = German Association for Electrical, Electronic and Information Technologies).

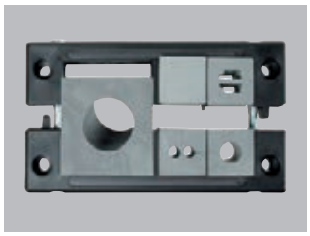

4. Finally, the rubber seal is glued around the cabinet panel cutout and the cable entry frame is secured with 4 screws. The cable entry is now complete, and has a protection class of IP 54!

**Advantage:** The panel cutout frames are the same as those used for heavy-duty connectors. They are supplied by the switchgear cabinet manufacturers. You do not require a new punching die!

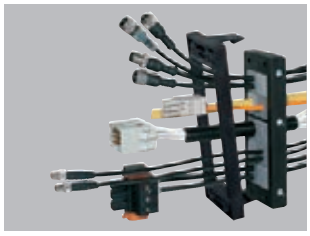

## HDC KEL 16

**Size equivalent to 16-pole HE inserts**

KEL 16/8 with 8 small grommets

KEL 16/4 closed half-shell and
4 small grommets

Snap frame
KEL 16 SNAP

### Technical data

| | |
|---|---|
| Material | Polyamide, free from halogens and silicone |
| Colour | black |
| Temperatur range | -40 °C to +140 °C (static) |
| Class of protection | IP 54, when the correct cable grommet is selected |
| UL 94 flammability rating | V0 |

### Ordering data

| Type | Number of grommet positions | | Qty. | Order No. |
|---|---|---|---|---|
| | small | large | | |
| HDC KEL 16/2 | – | 2 | 10 | **1825860000** |
| HDC KEL 16/4 | 4 | – *) | 10 | **1825900000** |
| HDC KEL 16/5 | 4 | 1 | 10 | **1849770000** |
| HDC KEL 16/8 | 8 | – | 10 | **1825910000** |
| **Snap frame** | | | | |
| HDC KEL 16 SNAP | | | 10 | **1827770000** |

*) with closed half shell

### Dimensions

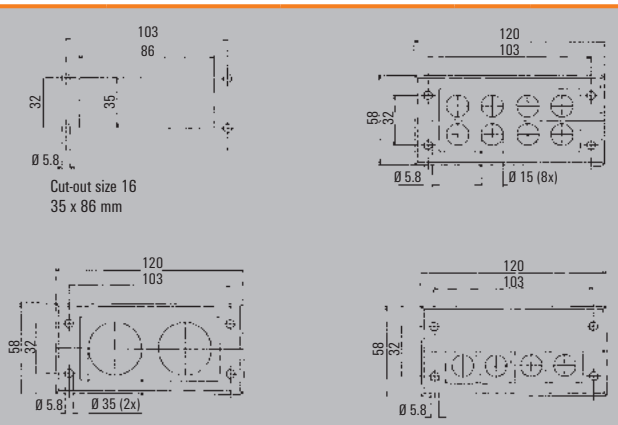


## HDC KEL 24

**Size equivalent to 24-pole HE inserts**

KEL 24/10 with 10 small grommets

KEL 24/7 with 1 large and
6 small grommets

Snap frame
KEL 24 SNAP

### Technical data

| | |
|---|---|
| Material | Polyamide, free from halogens and silicone |
| Colour | black |
| Temperatur range | -40 °C to +140 °C (static) |
| Class of protection | IP 54, when the correct cable grommet is selected |
| UL 94 flammability rating | V0 |

### Ordering data

| Type | Number of grommet positions | | Qty. | Order No. |
|---|---|---|---|---|
| | small | large | | |
| HDC KEL 24/4 | 2 | 2 | 10 | **1825930000** |
| HDC KEL 24/5 | 5 | – *) | 10 | **1825940000** |
| HDC KEL 24/7 | 6 | 1 | 10 | **1849760000** |
| HDC KEL 24/10 | 10 | – | 10 | **1827760000** |
| **Snap frame** | | | | |
| HDC KEL 24 SNAP | | | 10 | **1827780000** |

*) with closed half shell

### Dimensions

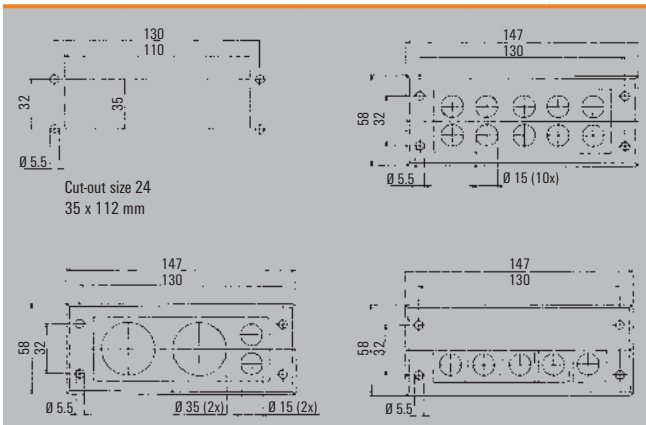

## HDC KEL B

KEL B 1 with 1 large grommet

KEL B 4 with 4 small grommets

Snap frame KEL.SNAP B4

### Technical data

| | |
|---|---|
| Material | Polyamide, free from halogens and silicone |
| Colour | black |
| Temperatur range | -40 °C to +140 °C (static) |
| Class of protection | IP 54, when the correct cable grommet is selected |
| UL 94 flammability rating | V0 |

### Ordering data

| Type | Number of grommet positions small | Number of grommet positions large | Qty. | Order No. |
|---|---|---|---|---|
| HDC KEL-B1 | - | 1 | 10 | **1048170000** |
| HDC KEL-B4 | 4 | - | 10 | **1048180000** |
| **Snap frame** | | | | |
| HDC KEL-SNAP B4 | | | 10 | **1048190000** |

### Dimensions

HDC KEL-B1

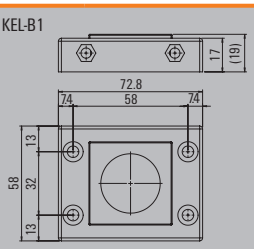


HDC KEL-B4

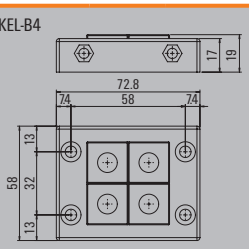


HDC KEL-SNAP B4

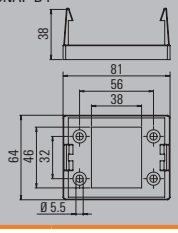

## HDC KEL DP - Rectangular version

**Rectangular cable entry plates (112 x 36 mm)**

CABTITE KEL-DP 24/14

CABTITE KEL-DP 24/17

CABTITE KEL-DP 24/19

CABTITE KEL-DP 24/26

CABTITE KEL-DP 24/48

CABTITE KEL-DP 24/50

## HDC KEL DP - Round version

**Round cable entry plates**

CABTITE KEL-DP 32/10

CABTITE KEL-DP 50/9

CABTITE KEL-DP 50/12

CABTITE KEL-DP 50/16

CABTITE KEL-DP 50/18

CABTITE KEL-DP 50/20

## Technical data

| | |
|---|---|
| Material | Elastomers, free from halogens and silicone |
| Colour | grey |
| Temperatur range | -40 °C to +90 °C (static) |
| Class of protection | IP 64 |
| UL 94 flammability rating | V0 |

## Technical data

| | |
|---|---|
| Material | Elastomers, free from halogens and silicone |
| Colour | grey |
| Temperatur range | -40 °C to +90 °C (static) |
| Class of protection | IP 65 |
| UL 94 flammability rating | V0 |

## Ordering data

**Rectangular version (112 x 36 mm)**

| Type | Number of lines with maximum diameter (in mm) | Qty. | Order No. |
|---|---|---|---|
| CABTITE KEL-DP 24/14 | 14 x max. 12.1mm | 1 | **1039850000** |
| CABTITE KEL-DP 24/17 | 12 x max. 12.6 mm<br>5 x max. 10.5 mm | 1 | **1039870000** |
| CABTITE KEL-DP 24/19 | 7 x max. 12.1 mm<br>12 x max. 6.5 mm | 1 | **1039890000** |
| CABTITE KEL-DP 24/26 | 2 x ASI cables<br>16 x max. 6.5 mm<br>4 x max. 12.1 mm<br>4 x max. 16.1 mm | 1 | **1039930000** |
| CABTITE KEL-DP 24/48 | 48 x max. 6.5 mm | 1 | **1039940000** |
| CABTITE KEL-DP 24/50 | 33 x max. 5.3 mm<br>9 x max. 6.4 mm<br>8 x max. 8.3 mm | 1 | **1039950000** |

## Ordering data

**Round version**

| Type | Number of lines with maximum diameter (in mm) | Qty. | Order No. for sheet thickness of 1.5-2.5 mm | Order No. for sheet thickness of 2.8-4.0 mm |
|---|---|---|---|---|
| CABTITE KEL-DP 32/10 | 6 x max. 5.2 mm<br>2 x max. 6.4 mm<br>2 x max. 9.4 mm | 1 | **1040120000** | **1040310000** |
| CABTITE KEL-DP 50/9 | 5 x max. 7.0 mm<br>4 x max. 18.0 mm | 1 | **1040130000** | **1040320000** |
| CABTITE KEL-DP 50/12 | 10 x max. 9.2 mm<br>2 x max. 11.2 mm | 1 | **1040160000** | **1040330000** |
| CABTITE KEL-DP 50/16 | 4 x max. 5.3 mm<br>5 x max. 6.3 mm<br>3 x max. 9.5 mm<br>4 x max. 11.3 mm | 1 | **1040180000** | **1040350000** |
| CABTITE KEL-DP 50/18 | 5 x max. 11.5 mm<br>5 x max. 9.0 mm<br>4 x max. 6.5 mm<br>2 x max. 5.5 mm<br>2 x max. 4.0 mm | 1 | **1040210000** | **1040360000** |
| CABTITE KEL-DP 50/20 | 16 x max. 6.3 mm<br>4 x max. 9.3 mm | 1 | **1040240000** | **1040370000** |

## Dimensions

Cut-out size KEL-DP 24
112 x 36 mm
1.5 - 4.0 mm sheet thickness

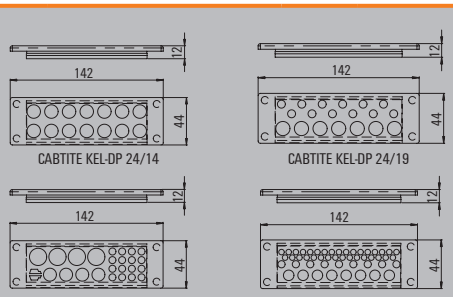


## Dimensions

2.8 to 4.0 mm sheet thickness

1.5 to 2.5 mm sheet thickness

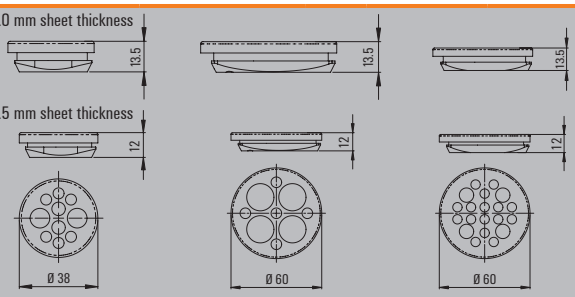

## Cable clamping rail Cabtite KEL-EMV

Provides electromagnetic protection for prefabricated cable without interrupting shielding.

**Advantages:**

- Direct, simple and quick contact with the enclosure
- Two-tier version saves space with up to 10 cables
- Strain relief without cable ties in accordance with VDE 0619
- No EMC cable glands necessary for mains-generated interference sources
- Low-impedance shielding contact
- Seals using outer sheath and not the shield = higher class of protection!
- Trouble-free retrofitting

### Technical data

| | |
|---|---|
| Material | Stainless steel |

### Ordering data

| Type | | for | Qty. | Order No. |
|---|---|---|---|---|
| | HDC KEL EMV 16/4 | KEL 16 | 10 | **1825750000** |
| | HDC KEL EMV 24/5 | KEL 24 | 10 | **1825760000** |

## Strain-relief strips

The Cabtite KZL strain-relief strips are used when routing various types of cables to machines and electrical cabinets. A secure grip is ensured by the undercut on the comb-shaped profile. Cable ties provide strain relief for the cables. Undercuts in the teeth of the KZL prevent the cable tie from slipping out.

## HDC KZL

CABTITE KZL 140

CABTITE KZL 80

CABTITE KZL 39

### Technical data

| | |
|---|---|
| Material | Polyamide, free from halogens and silicone |
| Colour | black |
| Temperatur range | -40 °C to +140 °C (static) |
| UL 94 flammability rating | V0 |

### Ordering data

| Type | Length | Qty. | Order No. for 35 mm DIN mounting rail | Order No. for C profile rail |
|---|---|---|---|---|
| CABTITE KZL 39 | 39 mm | 10 | 1039990000 | 1040080000 |
| CABTITE KZL 80 | 80 mm | 10 | 1039970000 | 1040060000 |
| CABTITE KZL 140 | 140 mm | 10 | 1039960000 | 1040030000 |

### Dimensions

CABTITE KZL 39 for 35 mm DIN rail

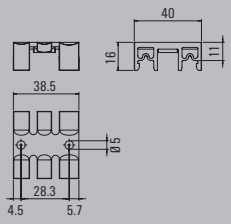


CABTITE KZL 80 for 35 mm DIN rail

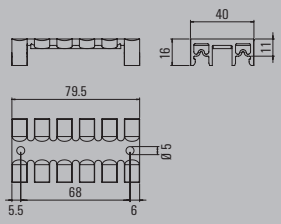


CABTITE KZL 140 for 35 mm DIN rail

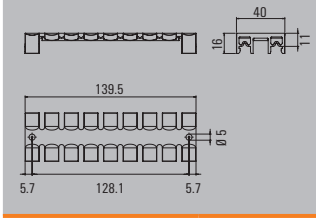

## Cabtite KVT

KVTs are used to feed through prefabricated cables when space is tight or only a few cables are required. As is the case with its big brother, the KEL, this product is also a two-piece system for easy assembly using the same cable grommets. The preassembled KVT32 can be used for hole diameters up to 35 mm, the KVT63 for hole diameters up to 65 mm. A sealing ring is also included.

- This two-piece system means that the size of the plug-in connector to be fed through is limited only by the size of the hole diameter.
- Two-piece two-tier system
- Fast and easy mounting
- The predefined gap achieves a minimum class of protection of IP54
- Large numbers of cables in very confined spaces
- Retrofitting of prefabricated wiring also possible
- The manufacturer's guarantee covering the prefabricated cables remains valid
- Integral strain relief to VDE 0619

## Operating mode

1. The grommet is fitted around the cable.
   **Important:**
   Choose an appropriately sized grommet for the diameter of the cable!

2. Press the grommet with the cable into the open cable gland. The flat sides of the grommet must face upwards when fitting the KVT 63/4!

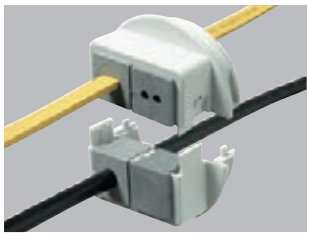

3. Squeeze the two halves of the cable gland together until they lock together with an audible "click".

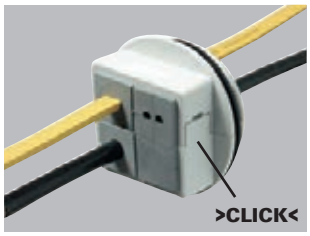


4. Place the seal, which is also supplied, over the thread. Then fit the cable gland into the hole and, if necessary, secure it with a locknut.

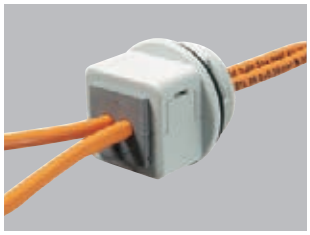

### Technical data

| | |
|---|---|
| Material | Polycarbonate, free from halogens and silicone |
| Colour | grey, similar to RAL 7035 |
| Temperatur range | IP54, when the correct cable grommet is selected |
| Class of protection | -30 °C to +100 °C (static) |
| UL 94 flammability rating | V0 |

### Ordering data

| Type | | Thread | No. of grommet positions small | large | Qty. | Order No. |
|---|---|---|---|---|---|---|
| | HDC KVT 25 | M 25 x 1.5 | 1 | - | 10 | **1826660000** |
| | HDC KVT 32 | M 32 x 1.5 | 1 | - | 10 | **1826670000** |
| | HDC KVT 63-4 | M 63 x 1.5 | 4 | - | 5 | **1828230000** |
| | HDC KVT 63-1 | M 63 x 1.5 | - | 1 | 5 | **1828240000** |
| **Locknut for D-Sub 9** | | | | | | |
| | KGM-SUB-D9 | M 32 x 1.5 | 1 | - | 10 | **1828250000** |

**Note:** HDC KVT 63-x types are supplied with a locknut.

### Dimensions

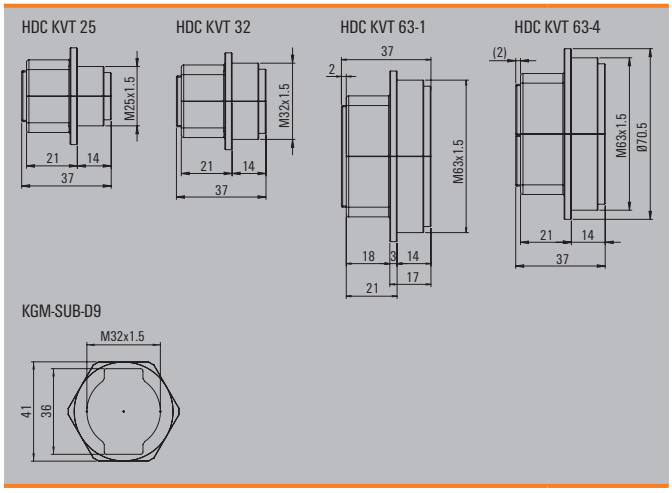

# Tools


| | | |
|---|---|---|
| **Tools** | Introduction | E.2 |
| | Hole punch | E.4 |
| | Screwdrivers | E.8 |
| | Torque screwdrivers | E.10 |
| | Uninsulated torque screwdriver | E.11 |
| | VDE-insulated torque screwdriver | E.12 |
| | Cable gland tools | E.13 |
| | Screwdrivers | E.14 |
| | VDE-insulated screwdriver | E.15 |
| | Uninsulated screwdriver | E.17 |
| | Weidmüller wrench set | E.19 |
| | Pin and electrical cabinet key | E.22 |

# Tools

Weidmüller´s professional tools are the result of an intensive development process that has been specifically focussed on the requirements of their use in practice. It is only possible to develop the perfect tool if you fully understand the applicat ing their products and tools. At Weidmüller, everything fits together. Weidmüller offers a variety of useful tools that will assist you in working safely and precisely and in the best possible way when processing and working with enclosures. Weidmüller offers a large range of screwdrivers, for example, using the DMS Manual range you can always make sure you reach the correct torque for mounting rails, gland plates or lid screws.



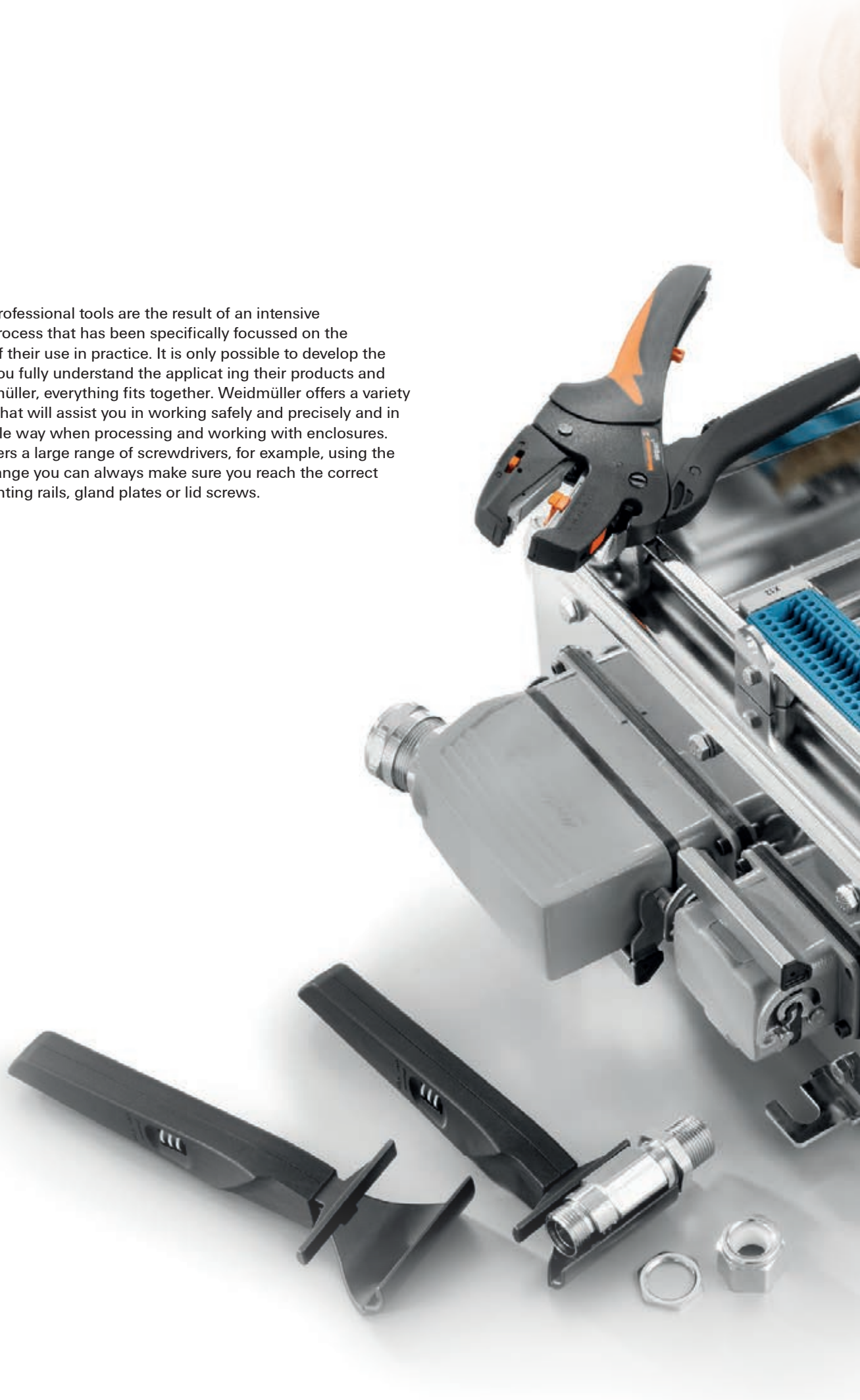

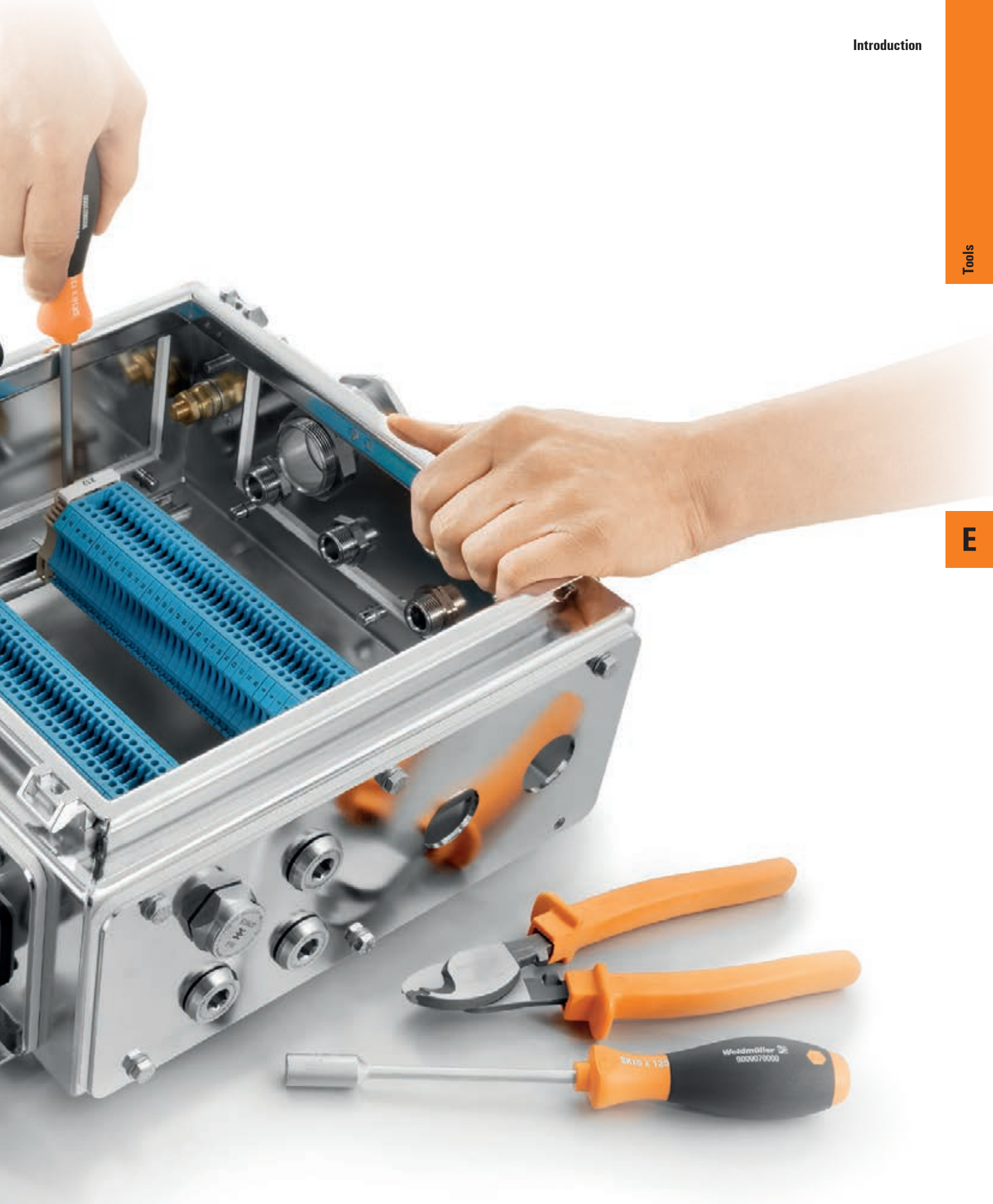
Weidmüller
9000070000

# Hydraulic hole puncher

The IP protection classes for enclosures, cable glands, heavy-duty connectors and Industrial Ethernet connectors can only be maintained under two conditions: the sheet metal must not be bent during the punching process and the size of the punched-out holes must correspond precisely with the specifications. The IE-KO-HAT hydraulic sheet metal hole puncher, together with its accessories, guarantees you the highest quality workmanship available. It ensures that the connector fits precisely with the punched-out holes so that you can fulfill the proper IP protection class requirements.

The hydraulic hole puncher punches out precise holes for accommodating metric and PG cable glands.

Automatic centre punching at the drill points when punching out holes for heavy-duty connectors.

Punching out holes for a variety of industrial Ethernet connectors.

The table below lists the round splitting stamps and their corresponding tension screws – for manual use and for use with the hydraulic screws

| Typee | Descriptions | Dimension | Order No. | Tension screw Ø x l in mm | Order No. | Hydraulic screw (tension bolt) Ø in mm | Order No. |
|---|---|---|---|---|---|---|---|
| KOS M 16 | Round splitting stamp for M16 cable glands | Ø 16.2 mm | **9204880000** | 9.5 x 50 | **9205030000** | 19 x 9.5 | **9205000000** |
| KOS M 20 | Round splitting stamp for M20 cable glands | Ø 20.4 mm | **9204950000** | 9.5 x 50 | **9205030000** | 19 x 9.5 | **9205000000** |
| KOS M 25 | Round splitting stamp for M25 cable glands | Ø 25.4 mm | **9204900000** | 9.5 x 50 | **9205030000** | 19 x 9.5 | **9205000000** |
| KOS M 32 | Round splitting stamp for M32 cable glands | Ø 32.5 mm | **9204910000** | 19.0 x 55 | **9205040000** | 19 | **9205010000** |
| KOS M 40 | Round splitting stamp for M40 cable glands | Ø 40.5 mm | **9204920000** | 19.0 x 75 | **9204780000** | 19 | **9205010000** |
| KOS PG 9 | Round splitting stamp for PG9 cable glands | Ø 15.2 mm | **9204930000** | 9.5 x 50 | **9205030000** | 19 x 9.5 | **9205000000** |
| KOS PG 11 | Round splitting stamp for PG11 cable glands | Ø 18.6 mm | **9204940000** | 9.5 x 50 | **9205030000** | 19 x 9.5 | **9205000000** |
| KOS PG 13 | Round splitting stamp for PG13 cable glands | Ø 20.4 mm | **9204950000** | 9.5 x 50 | **9205030000** | 19 x 9.5 | **9205000000** |
| KOS PG 16 | Round splitting stamp for PG16 cable glands | Ø 22.5 mm | **9204960000** | 9.5 x 50 | **9205030000** | 19 x 9.5 | **9205000000** |
| KOS PG 21 | Round splitting stamp for PG21 cable glands | Ø 28.3 mm | **9204970000** | 9.5 x 50 | **9205030000** | 19 x 9.5 | **9205000000** |
| KOS PG 29 | Round splitting stamp for PG29 cable glands | Ø 37.0 mm | **9204980000** | 19.0 x 55 | **9205040000** | 19 | **9205010000** |
| KOS PG 36 | Round splitting stamp for PG36 cable glands | Ø 47.0 mm | **9204990000** | 19.0 x 75 | **9204780000** | 19 | **9205010000** |

**Note:** Hydraulic screw included in the IE-KO-HAT set.
Tension screws only used for manual operation.

## Hydraulic hole puncher

Incl. accessories:
- 1 hydraulic screw Ø 19 mm
- 1 hydraulic screw Ø 19 x 9.5 mm
- 1 HSS pre-drill Ø 10 mm
- 1 spacer nut set (3-part)
- 1 bridge

## IE-KO-HAT

- Overpressure valve protects against overloading
- Cylinder head angled 90°
- Angled head can be rotated through 360°
- Ergonomic handle springs back automatically
- The piece of waste no longer becomes jammed thanks to 3-fold cleaving
- Hydraulic punch manufactured from high-strength aluminium (approx. 40 % less weight)

## Technical data

| Maximum steel-sheet punching performance | | IE-KO-HAT |
|---|---|---|
| Round holes from 1 to Ø 85 mm | - | 2.0 mm F = 370 N/mm² |
| Round holes from 2 to Ø 64 mm | | 3.0 mm F = 370 N/mm² |
| Square holes up to | - | 68 x 68 mm; 2.0 mm F = 370 N/mm² |
| Rectangular holes up to | - | 36 x 112 mm; 2.0 mm F = 370 N/mm² |
| **Maximum stainless steel sheet punching performance** | | |
| Round holes from 3 to Ø 64 mm | | 2.5 mm F = 600 N/mm² |
| **Tool data** | | |
| Length x width x height | mm | 290 / 120 / 70 |
| Weight | kg | 1.9 |
| Punching force | kN | 75 |
| Max. operating pressure | bar | 650 |
| **Note** | | |

## Ordering data

| Version | Type | Qty. | Order No. |
|---|---|---|---|
| | IE-KO-HAT | 1 | 1966810000 |
| **Note** | | | |

## Accessories

| | Type | Qty. | Order No. |
|---|---|---|---|
| | KOHS 19 | 1 | 9205010000 |
| | KOHS 9.5+19 | 1 | 9205000000 |
| | KOPD 10.0 | 1 | 9205020000 |
| **Note** | Splitting stamp on the next page | | |

# Hole punch

## Custom stamp for Industrial Ethernet connections

| Type | Description | Dimensions | Qty. | Order No. |
|---|---|---|---|---|
| IE-KOK-V1 | Custom shape for Bajonet 01 metal | Ø 27 mm x 1-sided 25.9 mm | 1 | 1966780000 |
| IE-KOK-V4 | Custom shape for Push Pull V04 plastic | Ø 23.2 mm x 2-sided 20.2 mm | 1 | 1966790000 |
| IE-KOK-V5 | Custom shape for RockStar® V05 metal | 22.0 x 22.0 mm | 1 | 9204790000 |
| IE-KOK-V14 | Custom shape for V14 flange | 22.0 x 18.5 mm | 1 | 1135240000 |

## Rectangular splitting stamp for heavy-duty connectors

| Type | Description | Dimensions | Size | Qty. | Order No. |
|---|---|---|---|---|---|
| KOK 52 x 36 | Splitting stamp for 6-pole heavy-duty connectors | 52.0 x 36 mm | 3 | 1 | 9204820000 |
| KOK 65 x 36 | Splitting stamp for 10-pole heavy-duty connectors | 65.0 x 36 mm | 4 | 1 | 9204830000 |
| KOK 86 x 36 | Splitting stamp for 16-pole heavy-duty connectors | 86.0 x 36 mm | 6 | 1 | 9204850000 |
| KOK 91 x 36 | Splitting stamp for 16-pole heavy-duty connectors | 91.0 x 36 mm | | 1 | 9204860000 |
| KOK 112 x 36 | Splitting stamp for 24-pole heavy-duty connectors | 112.0 x 36 mm | 8 | 1 | 9204870000 |

## Rectangular splitting stamp for switches

| Type | Description | Dimensions | Qty. | Order No. |
|---|---|---|---|---|
| KOK 46 x 46 | Rectangular splitting stamp for switches | 46.0 x 46.0 mm | 1 | 9204810000 |
| KOK 68 x 68 | Rectangular splitting stamp for switches | 68.0 x 68.0 mm | 1 | 9204840000 |

## Round splitting stamp for metric cable glands

| Type | Description | Dimensions | Qty. | Order No. |
|---|---|---|---|---|
| KOS M 16 | Round splitting stamp for M16 cable glands | Ø 16.2 mm | 1 | 9204880000 |
| KOS M 20 | Round splitting stamp for M20 cable glands | Ø 20.4 mm | 1 | 9204950000 |
| KOS M 25 | Round splitting stamp for M25 cable glands | Ø 25.4 mm | 1 | 9204900000 |
| KOS M 32 | Round splitting stamp for M32 cable glands | Ø 32.5 mm | 1 | 9204910000 |
| KOS M 40 | Round splitting stamp for M40 cable glands | Ø 40.5 mm | 1 | 9204920000 |

## Round splitting stamp for high-strength cable glands

| Type | Description | Dimensions | Qty. | Order No. |
|---|---|---|---|---|
| KOS PG 9 | Round splitting stamp for PG9 Cable glands | Ø 15.2 mm | 1 | 9204930000 |
| KOS PG 11 | Round splitting stamp for PG11 Cable glands | Ø 18.6 mm | 1 | 9204940000 |
| KOS PG 13 | Round splitting stamp for PG13 Cable glands | Ø 20.4 mm | 1 | 9204950000 |
| KOS PG 16 | Round splitting stamp for PG16 Cable glands | Ø 22.5 mm | 1 | 9204960000 |
| KOS PG 21 | Round splitting stamp for PG21 Cable glands | Ø 28.3 mm | 1 | 9204970000 |
| KOS PG 29 | Round splitting stamp for PG29 Cable glands | Ø 37.0 mm | 1 | 9204980000 |
| KOS PG 36 | Round splitting stamp for PG36 Cable glands | Ø 47.0 mm | 1 | 9204990000 |

## Tension screw

| Type | Description | Dimensions | Qty. | Order No. |
|---|---|---|---|---|
| KOBBS | Tension screw | 9.5 x 50 mm | 1 | 9205030000 |
| KOBBS | Tension screw | 19 x 55 mm | 1 | 9205040000 |
| KOBBS | Tension screw | 19 x 75 mm | 1 | 9204780000 |

# Screwdrivers

Precisely the proper torque! It's indispensable when you require your work to be precise, effective and repeatable: for example when screwing in sensitive or expensive components, during assembly, final testing, or during quality inspection. This is the ideal job for Weidmüller's manual torque screwdriver with its ergonomic grip and its unique interchangeable bit system.

The Weidmüller screwdriver assortment is the perfect solution; it features the ergonomic design and versatility required for demanding professional applications. Weidmüller safeguards your safety, health, comfort and efficiency with our ergonomic design.

In order to establish secure manual screw connections, all Weidmüller screwdrivers and manual torque screwdrivers feature an advanced geometry, slip protection and a special SoftFinish® area. These qualities enable optimal handling and ensure electrical safety and hand protection even when working on the most critical and potentially dangerous applications.

Weidmüller offers a wide variety of electric screwdrivers, standard bits and innovative quick-change holders – the perfect additions to the manual torque screwdriver. They are the ideal tool for achieving a high level of repetitive accuracy, which is made possible through their ergonomic design and integrated automatic torque control which comes as standard.

Weidmüller also offers innovative solutions for special applications such as cable glands or the fastening of sensor cables.



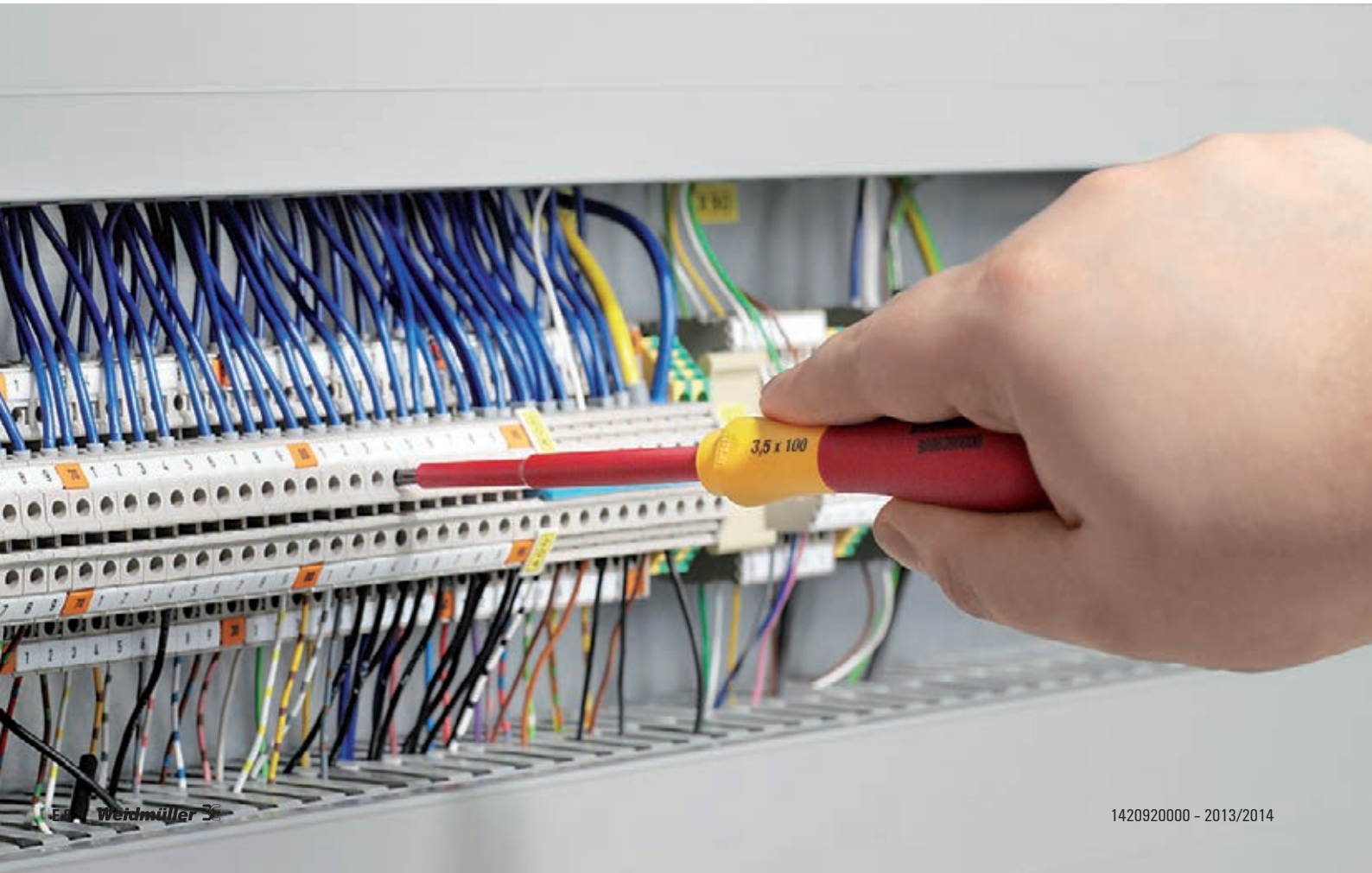

# DMS manual / DMSI manual

## Torque screwdrivers with insulation up to 1,000 V (VDE) DMSI manual

The „ DMSI manual“ with an integral window scale, combined with a Weidmüller 1,000 V insulated (VDE) interchangeable blade, ensures controlled tightening of screws and maximum reliability in electrical applications.

Every 1,000 V insulated (VDE) handle and blade is tested and provides the necessary safety up to 1,000 V AC / 1,500 V DC.

## Torque screwdrivers DMS manual

This is a versatile tool suitable for a variety of jobs, with an integral scale for easy reading of the torque value and a Weidmüller interchangeable blade.

Scale

**Each model is available with two torque ranges:**
- 0.5 to 1.7 Nm
- 2.0 to 8.0 Nm
- setting tool included

Setting tool

**Advantages:**
- Compact and especially lightweight design
- Torque set with special tool (included) to ensure the right setting
- Ergonomic handle size to match the torque range
- Every tool checked and given an ID No., 100 % quality control with verification and product reference
- Audible, unmistakable click upon reaching the torque, no unnecessary effort
- Interchangeable blade made from high-quality wear-resistant tool steel
- All tools comply with the accuracy stipulations of: EN ISO 6798, BS EN 26789, ASME B107.14M
- Operating accuracy: ±6 % of set scale value

## Uninsulated torque screwdriver

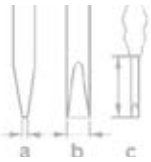


### DMS manual

**Torque screwdriver**
**EN ISO 6798, BS EN 26789, ASME B107.14M**

| Type | Size / AF | a | b | c | Order No. |
|---|---|---|---|---|---|
| DMS MANUELL 0,5-1,7 | 0.5 - 1.7 Nm | | | | 9918370000 |
| DMS MANUELL 2,0-8,0 | 2.0 - 8.0 Nm | | | | 9918380000 |

### WK K S

**Interchangeable bits for torque screwdriver**
**output acc. to DIN 5264, ISO 2380/1**

| | | | | | |
|---|---|---|---|---|---|
| WK S 0,4x2,5 | max. 0.4 Nm | 0.4 | 2.5 | 175 | 9918520000 |
| WK S 0,5x3,0 | max. 0.6 Nm | 0.5 | 3 | 175 | 9918530000 |
| WK S 0,6x3,5 | max. 1.1 Nm | 0.6 | 3.5 | 175 | 9918540000 |
| WK S 0,8x4,0 | max. 2.5 Nm | 0.8 | 4 | 175 | 9918550000 |
| WK S 1,0x5,5 | max. 3.8 Nm | 1 | 5.5 | 175 | 9918560000 |

### WK K PZ

**Interchangeable bits for torque screwdriver**
**output acc. to DIN 5260-PZ, ISO 8764/1-PZ**

| | | | | | |
|---|---|---|---|---|---|
| WK K PZ0 | max. 0.9 Nm | | | 175 | 9918600000 |
| WK K PZ1 | max. 3.8 Nm | | | 175 | 9918610000 |
| WK K PZ2 | max. 5.5 Nm | | | 175 | 9918620000 |

### WK K PH

**Interchangeable bits for torque screwdriver**
**output acc. to DIN 5260-PH, ISO 8764/1-PH**

| | | | | | |
|---|---|---|---|---|---|
| WK K PH0 | max. 0.9 Nm | | | 175 | 9918570000 |
| WK K PH1 | max. 3.8 Nm | | | 175 | 9918580000 |
| WK K PH2 | max. 5.5 Nm | | | 175 | 9918590000 |

### WGK 1/4 C6.3 E6.3

**Interchangeable bit with bit holder for torque screwdrivers**
**Drive: 1/4" C6.3 and 1/4" E6.3**

| | | | | | |
|---|---|---|---|---|---|
| WK 1/4" C6,3 E6,3 | | | | | 9202510000 |

## VDE-insulated torque screwdriver

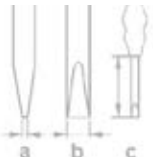


### DMSI manual

**VDE-insulated torque screwdriver**
**EN ISO 6798, BS EN 26789, ASME B107.14M**

| Type | Size / AF | a | b | c | Order No. |
|---|---|---|---|---|---|
| DMSI MANUELL 0,5-1,7 | 0.5 - 1.7 Nm | | | | 9918390000 |
| DMSI MANUELL 2,0-8,0 | 2.0 - 8.0 Nm | | | | 9918400000 |

### WK SI

**VDE-insulated interchangeable bits for VDE-insulated torque screwdriver; output acc. to DIN 5264, ISO 2380/1**

| | | | | | |
|---|---|---|---|---|---|
| WK SI 0,4x2,5 | max. 0.4 Nm | 0.4 | 2.5 | 200 | 9918410000 |
| WK SI 0,5x3,0 | max. 0.6 Nm | 0.5 | 3 | 200 | 9918420000 |
| WK SI 0,6x3,5 | max. 1.1 Nm | 0.6 | 3.5 | 200 | 9918430000 |
| WK SI 0,8x4,0 | max. 2.5 Nm | 0.8 | 4 | 200 | 9918440000 |
| WK SI 1,0x5,5 | max. 3.8 Nm | 1 | 5.5 | 200 | 9918450000 |

### WK IK PH

**VDE-insulated interchangeable bits for VDE-insulated torque screwdriver; output acc. to DIN 5260-PH, ISO 8764/1-PH**

| | | | |
|---|---|---|---|
| WK IK PH0 | max. 0.9 Nm | 200 | 9918460000 |
| WK IK PH1 | max. 3.8 Nm | 200 | 9918470000 |
| WK IK PH2 | max. 5.5 Nm | 200 | 9918480000 |

### WK IK PZ

**VDE-insulated interchangeable bits for VDE-insulated torque screwdriver; output acc. to DIN 5260-PZ, ISO 8764/1-PZ**

| | | | |
|---|---|---|---|
| WK IK PZ0 | max. 0.9 Nm | 200 | 9918490000 |
| WK IK PZ1 | max. 3.8 Nm | 200 | 9918500000 |
| WK IK PZ2 | max. 5.5 Nm | 200 | 9918510000 |

### WK IK SL/PH

**VDE-insulated interchangeable bits for VDE-insulated torque screwdriver**

| | |
|---|---|
| WK IK SL/PH1 | 1318130000 |
| WK IK SL/PH2 | 1318140000 |

## Cable gland tools

Screwing tool for all types of cable glands.

- Can tighten or loosen several rows of cable glands
- No deforming of the cable glands

### FleCaFix 11/24

**Cable gland tool**

- Spanner size: 11 to 24 AF
- Infinite adjustment of spanner size
- Ratchet function: not necessary to remove tool between turns
- Authentic one-hand tool

### FleCaFix 24/36

**Cable gland tool**

- Spanner size: 24 to 36 AF
- Infinite adjustment of spanner size
- Ratchet function: not necessary to remove tool between turns
- Authentic one-hand tool

## Technical data

| Tool data | | | |
|---|---|---|---|
| Length / Width / Height | mm | 190 / 30 / 60 | 204 / 30 / 60 |
| Weight | g | 190 | 240 |
| AF size | - | 11...24 mm | 24...36 mm |
| **Note** | | | |

## Ordering data

| Version | Type | Qty. | Order No. | Type | Qty. | Order No. |
|---|---|---|---|---|---|---|
| | FLECAFIX 11/24 | 1 | **9015900000** | FLECAFIX 24/36 | 1 | **9015980000** |
| **Note** | | | | | | |

# Screwdrivers

Weidmüller screwdrivers come in four different grip sizes, and are the result of a consistent grip concept which takes into account both the human hand and the different work requirements and conditions.

- Perfect handling with all grip sizes
- Maximum torques
- Optimum transmission of axial force
- Complete range including all commercial sizes

## SoftFinish® grip

Weidmüller's SoftFinish® grip zone for use in dry conditions and for general applications offers customers a complete range of screwdrivers that enables far higher torques as well as substantially more comfort due to the soft material of the grip.

**Product benefits:**

- Made of an especially soft material, which is kind to the skin, the SoftFinish® zone enables maximum torques
- Perfect ergonomic grip design for comfortable screw driving and optimum handling
- You can choose from long-life extremely stressable blades in standard sizes
- ChromTop blade tip offers maximum corrosion protection and greatest possible dimensional accuracy of the blade geometry in the screw head over many years

## SoftFinish® electric

VDE-insulated screwdriver according to DIN EN 60900, IEC 900 for work on live equipment

**Product benefits:**

- The protective insulation moulded directly on the screwdriver blade ensures electrical safety, even in critical applications
- Safe for working at up to 1,500 volts DC and 1,000 volts AC
- Each screwdriver is individually tested in a water bath at 10,000 volts according to DIN EN 60900
- Perfect ergonomic grip design for comfortable screw driving and optimum handling
- Made of special soft material which is kind to the skin, the SoftFinish® zone prevents slipping in critical situations and at the same time enables maximum torques

## VDE-insulated screwdriver

VDE-insulated screwdriver, for working on live parts up to 1.000 V AC and 1.500 V DC.
DIN EN 60900, IEC 900,
Each piece „GS Safety" tested. Bit made from fully hardened, high-alloy chromiumvanadium-molybdenum steel, gun-metal finish.

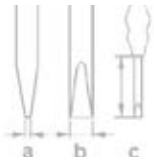


### SDI S

**VDE insulated slot-head screwdriver, SDI DIN 7437, ISO 2380/2, drive output acc. to DIN 5264, ISO 2380/1. SoftFinish® grip**

| Type | Blade type | Size / AF | a | b | c | Order No. |
|---|---|---|---|---|---|---|
| SDIS 0.4X2.0X60 | A | | 0.4 | 2 | 60 | 9205690000 |
| SDIS 0.4X2.5X75 | A | | 0.4 | 2.5 | 75 | 9008370000 |
| SDIS 0.5X3.0X100 | B | | 0.5 | 3 | 100 | 9008380000 |
| SDIS 0.6X3.5X100 | B | | 0.6 | 3.5 | 100 | 9008390000 |
| SDIS 0.8X4.0X100 | B | | 0.8 | 4 | 100 | 9008400000 |
| SDIS 1.0X4.5X125 | B | | 1 | 4.5 | 125 | 9008910000 |
| SDIS 1.0X4.5X175 | B | | 1 | 4.5 | 175 | 9205700000 |
| SDIS 1.0X5.5X125 | B | | 1 | 5.5 | 125 | 9008410000 |
| SDIS 1.0X5.5X175 | B | | 1 | 5.5 | 175 | 9205710000 |
| SDIS 1.2X6.5X150 | B | | 1.2 | 6.5 | 150 | 9008420000 |
| SDIS 1.6X8.0X175 | B | | 1.6 | 8 | 175 | 9008430000 |

### SDIK PH

**VDE-insulated crosshead screwdriver Pozidrive type, SDIK PZ DIN 7438, ISO 8764/2-PZ, output acc. to ISO 8764-PZ, SoftFinish® grip**

| | | | | | | |
|---|---|---|---|---|---|---|
| SDIK PH0 | | 0.00 | | | 60 | 9008560000 |
| SDIK PH1 | | 1.00 | | | 80 | 9008570000 |
| SDIK PH2 | | 2.00 | | | 100 | 9008580000 |
| SDIK PH3 | | 3.00 | | | 150 | 9008590000 |

### SDIK PZ

**VDE-insulated crosshead screwdriver Pozidrive type, SDIK PZ DIN 7438, ISO 8764/2-PZ, output acc. to ISO 8764-PZ, SoftFinish® grip**

| | | | | | | |
|---|---|---|---|---|---|---|
| SDIK PZ1 | | 1.00 | | | 80 | 9008900000 |
| SDIK PZ2 | | 2.00 | | | 100 | 9008890000 |

### SDI SL / PH

**VDE-insulated plus-minus screwdriver, Phillips, SDI SL/PH SoftFinish® handle**

| | | | | | | |
|---|---|---|---|---|---|---|
| SDI SL/PH 1 | | size PH1 | | | | 1318330000 |
| SDI SL/PH 2 | | size PH2 | | | | 1318340000 |

### SDIZ

**VDE insulated slot-head screwdriver, SDI DIN 7437, ISO 2380/2, drive output acc. to DIN 5264, ISO 2380/1. SoftFinish® grip**

| | | | | | | |
|---|---|---|---|---|---|---|
| SDIZ 0.6X3.5X100 | | | 0.6 | 3.5 | 100 | 9008450000 |
| SDIZ 0.8X4.0X100 | | | 0.8 | 4 | 100 | 9008460000 |
| SDIZ 0,8X5,5 150/248 | | | 0.8 | 5.5 | 150 | 9008640000 |

## VDE-insulated screwdriver

VDE-insulated screwdrivers, for working on live parts up to 1.000 V AC and 1.500 V DC, DIN EN 60900, IEC 900. Each piece „GS Safety" tested. Blade made from throughhardened, high-alloy chromium-vanadium-molybdenum steel, gun-metal black-oxide finish.

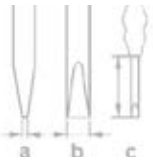


### SDIS 2.5-5.5/PH/1/2

**6-part set: VDE insulated slotted and crosshead PH screwdriver set**

| Type | Blade type | Size / AF | a | b | c | Order No. |
|---|---|---|---|---|---|---|
| SDIS 0.4X2.5X75 | A | | 0.4 | 2.5 | 75 | |
| SDIS 0.5X3.0X100 | B | | 0.5 | 3 | 100 | |
| SDIS 0.8X4.0X100 | B | | 0.8 | 4 | 100 | |
| SDIS 1.0X5.5X125 | B | | 1 | 5.5 | 125 | |
| SDIK PH1 | | 1.00 | | | 80 | |
| SDIK PH2 | | 2.00 | | | 100 | |
| SDI Set S2.5-5.5/PH1/2 | | | | | | **9009730000** |

### SDIS 2.5-5.5/PZ/1/2

| | | | | | | |
|---|---|---|---|---|---|---|
| SDIS 0.4X2.5X75 | A | | 0.4 | 2.5 | 75 | |
| SDIS 0.5X3.0X100 | B | | 0.5 | 3 | 100 | |
| SDIS 0.8X4.0X100 | B | | 0.8 | 4 | 100 | |
| SDIS 1.0X5.5X125 | B | | 1 | 5.5 | 125 | |
| SDIK PZ1 | | 1.00 | | | 80 | |
| SDIK PZ2 | | 2.00 | | | 100 | |
| SDI Set S2.5-5.5/PZ1/2 | | | | | 1 | **1128540000** |

### SDIS 2.0-5.5

**6-part set: VDE-insulated slotted screwdriver set**

| | | | | | | |
|---|---|---|---|---|---|---|
| SDIS 0.4X2.0X60 | A | | 0.4 | 2 | 60 | |
| SDIS 0.4X2.5X75 | A | | 0.4 | 2.5 | 75 | |
| SDIS 0.5X3.0X100 | B | | 0.5 | 3 | 100 | |
| SDIS 0.6X3.5X100 | B | | 0.6 | 3.5 | 100 | |
| SDIS 0.8X4.0X100 | B | | 0.8 | 4 | 100 | |
| SDIS 1.0X5.5X125 | B | | 1 | 5.5 | 125 | |
| SDI Set S2.0-5.5 | | | | | 1 | **9205550000** |

## Uninsulated screwdriver

Weidmüller SoftFinish® screwdriver for general applications.
Blade made from through-hardened, high-alloy chromium-vanadium-molybdenum steel, matt chrome-plated.

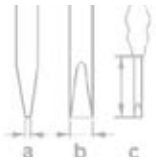


### SD S

**Slotted screwdriver with rounded blade SD DIN 5265, ISO 2380/2, output to DIN 5264, ISO 2380/1. ChromTop tip, SoftFinish® grip**

| Type | Blade type | Size / AF | a | b | c | Order No. |
|---|---|---|---|---|---|---|
| SDS 0.4X2.0X60 | B | | 0.4 | 2 | 60 | 9037160000 |
| SDS 0.4X2.5X75 | A | | 0.4 | 2.5 | 75 | 9009030000 |
| SDS 0.5X3.0X80 | A | | 0.5 | 3 | 80 | 9008320000 |
| SDS 0.6X3.5X100 | A | | 0.6 | 3.5 | 100 | 9008330000 |
| SDS 0.6X3.5X200 | A | | 0.6 | 3.5 | 200 | 9010110000 |
| SDS 0.8X4.0X100 | A | | 0.8 | 4 | 100 | 9008340000 |
| SDS 0.8X4.0X125 | A | | 0.8 | 4.5 | 125 | 9009020000 |
| SDS 1.0X5.5X150 | A | | 1 | 5.5 | 150 | 9008350000 |
| SDS 1.2X6.5X150 | A | | 1.2 | 6.5 | 150 | 9009010000 |

### SDK PH

**Crosshead screwdriver, Phillips, SDK PH DIN 5262, ISO 8764/2-PH, ouput to ISO 8764-PH, ChromTop tip, SoftFinish® grip**

| | | | | | | |
|---|---|---|---|---|---|---|
| SDK PH0 | | 0.00 | | | 60 | 9008470000 |
| SDK PH1 | | 1.00 | | | 80 | 9008480000 |
| SDK PH2 | | 2.00 | | | 100 | 9008490000 |
| SDK PH3 | | 3.00 | | | 150 | 9008500000 |

### SDK PZ

**Crosshead screwdriver, Pozidriv, SDK PZ DIN 5262, ISO 8764/2-PZ, ouput to ISO 8764/1-PZ, ChromTop tip, SoftFinish® grip**

| | | | | | | |
|---|---|---|---|---|---|---|
| SDK PZ1 | | 1.00 | | | 80 | 9008530000 |
| SDK PZ2 | | 2.00 | | | 100 | 9008540000 |
| SDK PZ3 | | 3.00 | | | 150 | 9008550000 |

### SD TH

**Torx® TH screwdriver with hole in tip of blade (tamper-resistant), SD TH for screwing Torx® and Torx®-TH security screws (pin in centre of Torx® recess), ChromTop tip, SoftFinish® grip**

| | | | | | | |
|---|---|---|---|---|---|---|
| SD TH10 | | | 10 | | 80 | 9009180000 |
| SD TH15 | | | 15 | | 80 | 9009170000 |
| SD TH20 | | | 20 | | 100 | 9009160000 |

### SK

**Hexagon socket wrench SK DIN 3125, ouput to DIN 3125, SoftFinish® grip**

| | | | | | | |
|---|---|---|---|---|---|---|
| SK 10,0x125 | | | | | | 9009070000 |

## Uninsulated screwdriver

Weidmüller SoftFinish® screwdriver for general applications.
Blade made from through-hardened, high-alloy chromium-vanadium-molybdenum steel, matt chrome-plated.

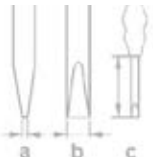


### Set S 2.5/3.0/4.0/5.5/PH 1/2

**6-part set: slotted and crosshead PH screwdriver set with circular blades**

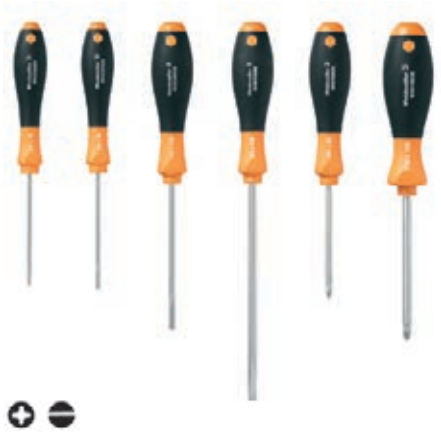

| Type | Blade type | Size / AF | a | b | c | Order No. |
|---|---|---|---|---|---|---|
| SDS 0.4X2.5X75 | A | | 0.4 | 2.5 | 75 | |
| SDS 0.5X3.0X80 | A | | 0.5 | 3 | 80 | |
| SDS 0.8X4.0X100 | A | | 0.8 | 4 | 100 | |
| SDS 1.0X5.5X150 | A | | 1 | 5.5 | 150 | |
| SDK PH1 | | 1.00 | | | 80 | |
| SDK PH2 | | 2.00 | | | 100 | |
| SD Set S2.5-5.5/PH1/2 | | | | | | **9009740000** |

### Set S 2.0/2.5/3.0/3.5/4.0/5.5

**6-part set: slotted screwdriver set**

| | | | | | | |
|---|---|---|---|---|---|---|
| SDS 0.4X2.0X60 | B | | 0.4 | 2 | 60 | |
| SDS 0.4X2.5X75 | A | | 0.4 | 2.5 | 75 | |
| SDS 0.5X3.0X80 | A | | 0.5 | 3 | 80 | |
| SDS 0.6X3.5X100 | A | | 0.6 | 3.5 | 100 | |
| SDS 0.8X4.0X100 | A | | 0.8 | 4 | 100 | |
| SDS 1.0X5.5X150 | A | | 1 | 5.5 | 150 | |
| SD Set S2.0-5.5 | | | | | 1 | **9205560000** |

### SD TO 0,6x3,0

**Angled slotted screwdriver with round handle, SoftFinish® handle**

| | | | | | | |
|---|---|---|---|---|---|---|
| SD TO 0,6X3,0 | A | | 0.6 | 3 | 70 | **1323880000** |

## Weidmüller wrench set

Socket wrench manufactured from through-hardened chromium-vanadium steel, manufactured according to DIN ISO 2936 L (DIN 911), high-quality finished surface.

| Type | Size / AF | a | b | c | Order No. |
|---|---|---|---|---|---|
| **SK WSD S** | | | | | |
| | 1.5 | | | | |
| | 2 | | | | |
| | 2.5 | | | | |
| | 3 | | | | |
| | 4 | | | | |
| | 5 | | | | |
| | 6 | | | | |
| | 8 | | | | |
| | 10 | | | | |
| SK WSD-S 1,5-10,0 | | | | | 9008850000 |
| **SK S** | | | | | |
| | | | | | |
| | | | | | |
| | | | | | |
| | | | | | |
| | | | | | |
| | | | | | |
| | | | | | |
| SKS 2,0-8,0 | | | | | 9008860000 |
| **SK S MR** | | | | | |
| | | | | | |
| | | | | | |
| | | | | | |
| | | | | | |
| | | | | | |
| | | | | | |
| | | | | | |
| SKS 2,0-8,0 MR | | | | | 9008870000 |
| **TH S** | | | | | |
| | | | | | |
| | | | | | |
| | | | | | |
| | | | | | |
| | | | | | |
| | | | | | |
| | | | | | |
| TH-S 9-40 | | | | | 9008880000 |

### SK WSD S

9-piece offset screwdriver set in the Prostar, with MagicRing:
tightly holds standard screws in any position thanks to its spring steel ring (up to size 3), with ball head for screwing up to an angle of 25°.

### SK S

7-piece Allen key set

### SK S MR

7-piece Allen key set with ball head and MagicRing: holds standard screws (size 3 and larger) in any position thanks to its spring steel ring, with ball head for screwing up to an angle of 25°.

### TH S

8-piece Torx®-TH socket wrench set with hole in the bit tip (tamper-resistant), for screwing Torx® and Torx®-TH safety screws (centre pin in the profile)

## Weidmüller wrench set

Weidmüller SoftFinish® screwdriver for general applications.
Blade made from through-hardened, high-alloy chromium-vanadium-molybdenum steel, matt chrome-plated.

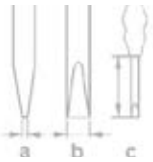


### System 11+1 S-PH-PZ-SK

12-piece set with interchangeable bits for slotted, cross-head PH/PZ and hexagon head screws, SoftFinish® handle

| Type | Size / AF | a | b | c | Order No. |
|---|---|---|---|---|---|
| SD | | | | | |
| SD | | | | | |
| SD | | | | | |
| SD | | | | | |
| PH 1 | | | | | |
| PH 2 | | | | | |
| PZ 1 | | | | | |
| PZ 2 | | | | | |
| SK | | | | | |
| SK | | | | | |
| SK | | | | | |
| SYSTEM 11+1 | | | | 140 | **9009750000** |

## IS 4 / IS 6 / IS 8

**Wrench with pegged pilot tip**

Hexagon screwdriver with cross-grip made from highquality plastic

- Nickel-plated surface
- Made from hardened chromium-vanadium steel
- Manufactured according to DIN 6911
- Designed for screws acc. to DIN 6912

### Technical data

| | IS4 | IS6 | IS8 |
|---|---|---|---|
| c | 60 mm | 80 mm | 90 mm |
| Weight | 27 g | 61 g | 89 g |

### Ordering data

| Type | Qty. | Order No. |
|---|---|---|
| IS 4 DIN 6911 | 1 | 0485100000 |
| IS 6 DIN 6911 | 1 | 0407900000 |
| IS 8 DIN 6911 | 1 | 0235000000 |

## IS 2 KG / IS 3 KG / IS 4 KG

**Socket wrench**

Hexagon screwdriver with cross-grip made from highquality plastic

- Nickel-plated surface
- Made from hardened chromium-vanadium steel
- Manufactured according to DIN 6911
- Designed for screws acc. to DIN 6912

### Technical data

| | IS 2 KG | IS 3 KG | IS 4 KG |
|---|---|---|---|
| c | 100 mm | 100 mm | 100 mm |
| Weight | 32 g | 32 g | 32 g |

### Ordering data

| Type | Qty. | Order No. |
|---|---|---|
| IS 2 KG | 1 | 1806630000 |
| IS 3 KG | 1 | 1806650000 |
| IS 4 KG | 1 | 1806660000 |

## SDQ T15 / SDQ T20 / SDQ T40

**Socket wrench, Torx®**

Torx® screwdriver with cross-grip made from high-quality plastic

- Matt-chrome surface finish
- Made from hardened chromium-vanadium steel

### Technical data

| | SDQ T15 | SDQ T20 | SDQ T40 |
|---|---|---|---|
| c | 100 mm | 100 mm | 100 mm |
| Weight | 32 g | 32 g | 32 g |

### Ordering data

| Type | Qty. | Order No. |
|---|---|---|
| SDQ T15 | 1 | 1318390000 |
| SDQ T20 | 1 | 1318400000 |
| SDQ T40 | 1 | 1318410000 |

## Cross-Key Master

**Universal key**

1.0 x 7 mm  PH 2

5 mm
7 mm  12 mm
9 mm  13.5 mm
8 mm  13.5 mm
4 mm  10 mm

- With bit holder and reversible bit (drives - refer to symbols)
- Material: diecast zinc
- Dimensions: 62 x 90 mm

**Application:** For almost all technical locking systems in buildings including: doors, window handles, radiator bleed valves, sanitary installations, HVAC, gas and water supply

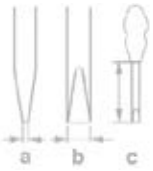


### Technical data

| | |
|---|---|
| | |
| | |
| | |
| | |
| | |
| | |
| | |
| | |

### Ordering data

| Type | Qty. | Order No. |
|---|---|---|
| CROSS-KEY MASTER | 1 | 9918150000 |
| | | |
| | | |

## Cross-Key Universal

**Universal electrical cabinet key**

1.0 x 7 mm  PH 2

5 mm
6 mm  11.5 mm
9 mm  13.5 mm
7-8 mm  13.5 mm
3-5 mm  9 mm

- With bit holder and reversible bit (drives - refer to symbols)
- Material: diecast zinc
- Dimensions: 72 x 72 mm

**Application:** For locking systems used in electrical engineering, fits all standard electrical cabinet locks.

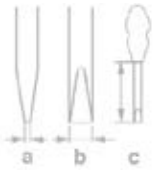


### Technical data

| | |
|---|---|
| | |
| | |
| | |
| | |
| | |
| | |
| | |
| | |

### Ordering data

| Type | Qty. | Order No. |
|---|---|---|
| CROSS-KEY UNIVERSAL | 1 | 9918130000 |
| | | |
| | | |

## Cross-Key Universal S

**Universal mini electrical cabinet key**

1.0 x 7 mm  PH 2

6 mm  11.5 mm
9 mm  13.5 mm
8 mm  13.5 mm
5 mm  9 mm

- With bit holder and reversible bit (drives - refer to symbols)
- Material: diecast zinc
- Dimensions: 42 x 42 mm

**Application:** For locking systems used in electrical engineering, fits all standard electrical cabinet locks.

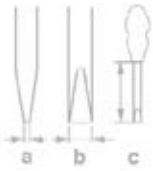


### Technical data

| | |
|---|---|
| | |
| | |
| | |
| | |
| | |
| | |
| | |
| | |

### Ordering data

| Type | Qty. | Order No. |
|---|---|---|
| CROSS-KEY UNIVERSAL S | 1 | 9918140000 |
| | | |
| | | |

# Weidmüller Solutions & Services


| | | |
|---|---|---|
| **Weidmüller Solutions & Service** | Customer specific solutions: best advice, best solutions | V.2 |
| | Digital support: RailDesigner®, Product Assistant for Distribution Boxes, Online product catalogue, M-Print® PRO label designer | V.8 |

# Application specific solutions – Your requirements are our motivation

Each industry has its own requirements calling for more and more individual solutions aside from standard products. Your new product might have to contend with severe conditions. Many applications are subjected to high mechanical strains – through vibration or directly applied forces. Extreme temperature conditions or an application in hazardous areas are further factors your product must be able to comply with. We can offer you highly competent expertise to support you in the selection of ideal products, whatever your application. Feel free to contact us!

From custom product development, customer-specific assembly or application-specific products that are ready for use - we can help you to optimise your working processes and ensure your company's sustained efficiency, today, as well as for the future.

**Individual product development**
Working closely with you, we can develop individual and future-proof products using the latest technologies and which are specifically tailored to your application.

**Customer-specific assembly**
Our highly-skilled production expertise and broad product portfolio means that we can deliver superior solutions to meet and exceed your specification requirements.

**Application-specific products**
Our cross-industrial solutions set standards: Set up for your application, instantly ready for use and available from stock.

# Individual product development for your success

**We have a passion for simple, innovative solutions**
Working with you, we can develop innovative and future-oriented products tailored to your application.
Our philosophy is "one customer - one product". It is not the product that is the starting point, but you, your technical specifications and your requirements.

**A connecting partnership**
The development of individual products means making the most of the experience and competencies available in the partnership. Our project management provides a professional and quality approach - from concept and design through to development, implementation and production.
Our extensive knowledge of electrical connectivity, enclosure and sealing technology, as well as signal conditioning are all at your disposal.

**Benefit from a reliable partner:**

- **Increase the efficiency of your development and production processes**
  Outsourcing the development and production of your components will shorten your time-to-market. In addition, you have more time to concentrate on your core competencies.
- **Take advantage of our applications and production expeience and expertise**
  You can draw on the accumulated knowledge of our applications engineers and our specialists in the fields of connection technology, enclosure and surface technology, as well as metal and plastic processing, which is second to none.
- **Feel safe with the professional approach of our project management**
  Through innovation workshops, feasability studies and profitability analyses we define a requirement profile forming the basis for the further development process.
  In this way, you can be sure of the best possible products for your needs.

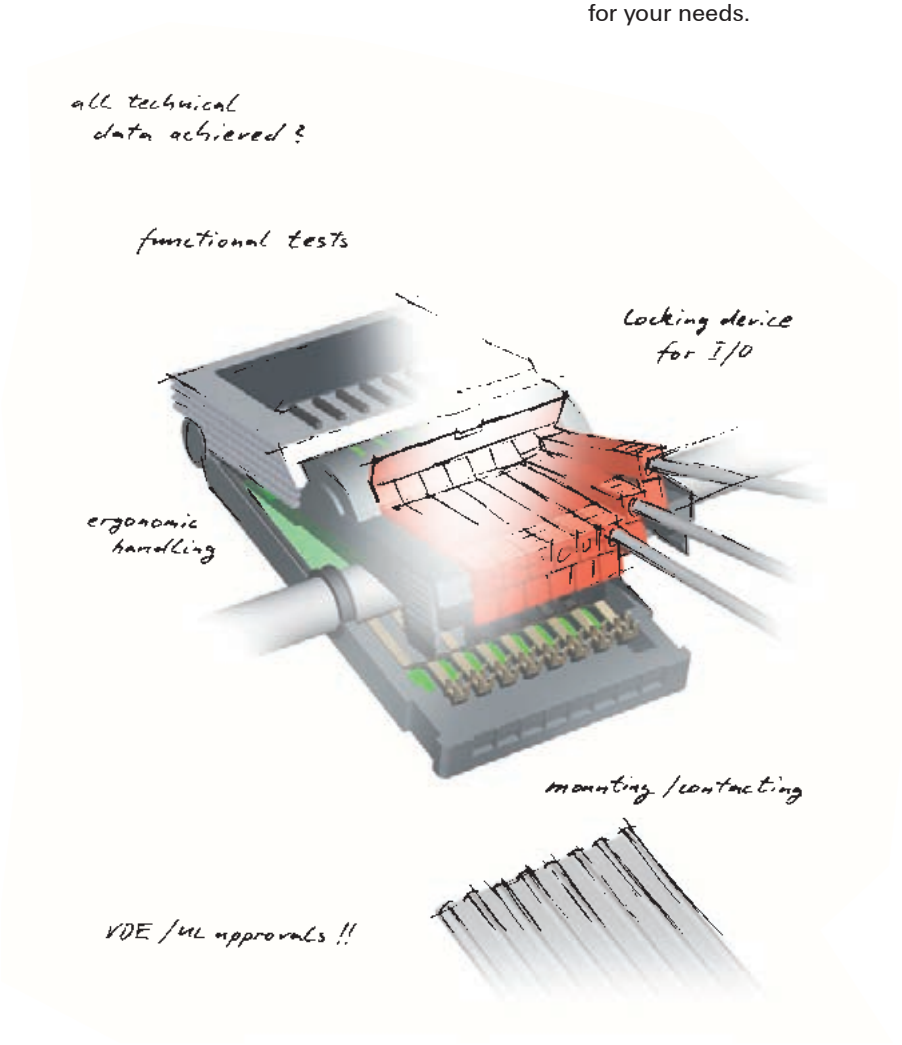

# Application specific products – solutions for industries and markets

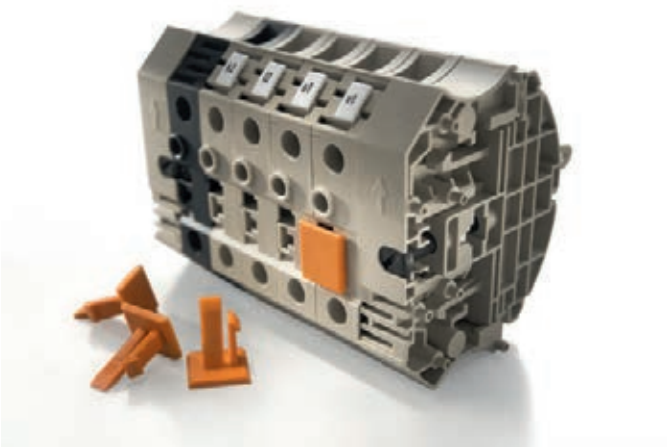

Industries and applications often have similar or even identical requirements for products or product assemblies. Application specific products that are based on earlier realised solutions are now directly available from stock.

**Your advantage:** You quickly get a suitable and cost-efficient solution.

**Cross industrial solutions as standard**
It is our aim to develop solutions that offer the additional advantage of a truly flexible design. Although this may mean an application-specific product may have an additional input or terminal you don't need, it can still be much cheaper than having a custom-made solution. Therefore, you not only save time, but money!

**Reap multiple benefits:**

- **High availability**
  Application specific products are available from stock without delay. So you can rely on the delivery of your products when you need them.
- **Advice from application engineers**
  Using the expertise of our applications engineers means that you can develop the solutions that are not only right, but which deliver added value to your applications.
- **Supportive software**
  Project planning and evaluation is made easy with our software solutions such as NetCalc, RailDesigner® or Softclinic.
- **Worldwide application centres**
  We stay in constant dialogue with our worldwide application centres, ensuring that our own application knowledge is shared, kept up to date and at your disposal anywhere you need us.

# Customer specific assembly, tailored configuration

You may be looking to bring costs down and increase your efficiency. It may be that you would like more time to focus on your core competencies. You could be looking for a partner who will sent up intelligent solutions for you, that you can trust to deliver your specific requirements. Here at Weidmüller, we have a wealth of expertise, capability, and capacity to deliver custom solutions that are flexible, economically advantageous and on time.

We offer to work closely with you, providing support and advice, and in putting together the job specification. Furthermore, our broad product portfolio means that we can jointly work together on the selection of the best components to make up your custom solution.

**Highest levels of professional production**
You have complete access to our highly-skilled project management team and our production expertise, for example, in the ATEX area. We can offer you a comprehensive portfolio of customer-specific assemblies, from simple assembly to the modification of existing electronics products.

Our services include:
- Adaptation and assembly of enclosures for all IP protection classes
- ATEX solutions for hazardous areas
- Assembly of heavy duty connectors
- Assembly of terminal strips
- Customer specific electronics solutions
- Cable assembly

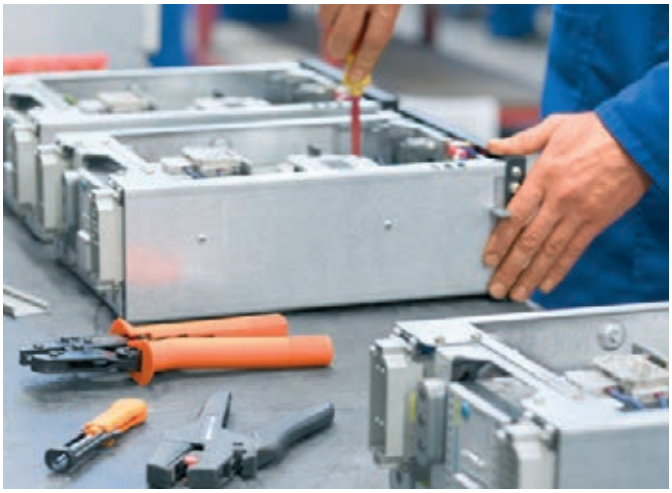

**Take advantage of:**
- **Simple ordering and stockholding information**
  One solution – one item number! It will no longer be necessary to order single components. Article variety and stockholding will be reduced.
- **Professional assembly**
  All individual components will be pre-assembled, reducing your own assembly time and costs.
- **Less costs for documentation**
  Our RailDesigner® software will facilitate the generation of parts lists or drawings.
- **Modern processing of enclosures**
  Our CNC processing centres can adapt the enclosures to suit your tailored solution.

# Customer specific assembly – consultation, product, development and production – all from a single source

Our application and manufacturing expertise influences decisions on all areas of modern connection technology. They therefore play an integral part of every solution.

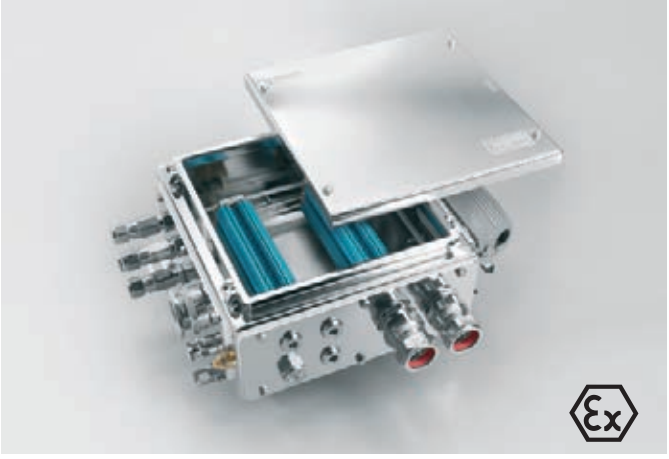

**Enclosures**
Perfect protection and safety
- Enclosures for all IP protection classes
- ATEX enclosures for hazardous areas
- Placement of inspection glasses, drill holes and threads
- Elaborate machining operations like the milling of contours
- Class C5 welding, according to DIN 6700, for stainless steel and sheet steel enclosures
- Surface coating as and when required
- Individual device and system markers

**Heavy duty connectors**
Perfect connection with system
- Placement of drill holes and cable glands
- Equipped with plug-and-play components
- Wiring of subassemblies
- Cable assembly
- All housings are available with individual laser marking

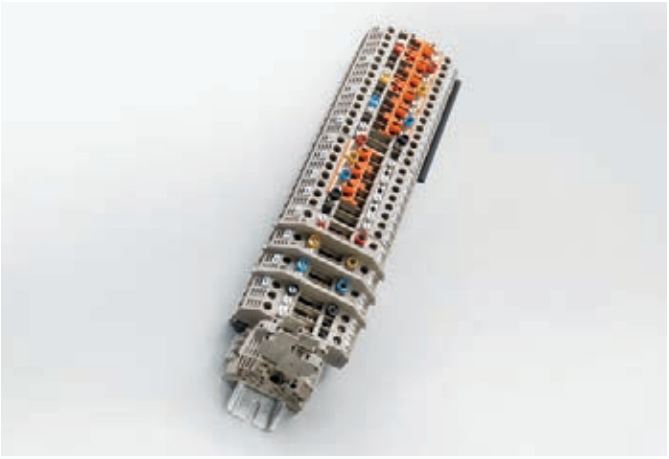

**Terminal strips**
Configuration made to measure
- Machining of mounting rails
- Snapping components onto terminal rails
- Placement of cross connections
- Mounting of standard wires
- Marking of terminals, devices, wires and cables

**Electronics**

Individual solution from the beginning

- Modular terminal blocks, component plugs, snap on bases, enclosures for electronics: integration of relevant electronic components
- Snap-on base: Component carrier design or simple wiring of the modules
- Interface units
- Modification of existing electronic products: Modification of the circuitry or specific calibration
- Combination of components: Relays or optocouplers in combination with other components

**Cable assembly**

Our special service

- Pre cutting of wires and cables
- Installation of
  - Heavy duty connectors
  - PCB connectors or DIN connectors
- Conditioning of wire ends
- Mounting of wire end ferrules and cable lugs
- Connection of wires to terminal rails

# RailDesigner®
# A faster way to configure and order terminal strips

These days, time and cost efficiency are of the essence when it comes to working in planning and production. RailDesigner®, our free configuration and purchasing software, uses its virtual assembly of mounting rails (assembled or unassembled) to help you with the design of your own completely personal solution.

**RailDesigner® brings you substantial benefits:**

**Less time required**
It speeds up the process of acquiring quotations and placing orders because, for example, all processes can be initiated directly from the software. You configure your projects and the rest virtually takes care of itself!

**User friendly operation**
Any potential errors are prevented by automatic installation tips and clear project processing and management. So that you can plan your project realistically, RailDesigner® offers both 2D and 3D displays.

**Wide selection from the current product portfolio**
"You can easily download software updates for RailDesigner® from the internet.
This means that you will always have access to the latest version of our product database."

**Project planning that is compatible with your software**
Plan and design your projects easily using your usual CAE software. With the integrated interface, transferring data from your CAE system has never been so simple. You can export component lists and terminal strip designs in various formats. Marking data is automatically transferred to the M-Print® Pro labelling software.

**Simple purchasing of terminal strips**
Once you have completed the planning stages of your projects in RailDesigner®, you can choose to send all of your data to us by email. Then we take over the assembly and deliver the required configuration to you, along with anything else that you still require for your project.

Download the software for free and discover the advantages to using RailDesigner® at **www.raildesigner.de**

# Product assistant for distribution boxes and assemblies – The perfect solution, in the shortest time

You can easily and quickly select, combine and purchase the required components, all with the help of the Weidmüller product assistant for distribution boxes and assemblies. This means that you can rapidly obtain your individual enclosure solutions which may include the following components:

**Empty enclosures without holes**
Empty enclosures in various sizes of the Klippon® K and Klippon® POK series (aluminium and plastic) with matching mounting rails.

**Empty enclosures with pre-threaded holes**
Empty enclosures in different sizes from the Klippon® K and Klippon® POK series (aluminium and plastic), that are already equipped with metric threaded holes.

**Mounting rails**
Exactly tailored mounting rails for the enclosure sizes on offer.

**Terminal strips**
Mounting rails, which also perfectly match the offered enclosure sizes and are pre-fitted with terminals, optionally with screw or tension clamp connection.

**Distribution boxes with Ex-protection**
Enclosures that are already assembled with a terminal strip and already equipped with metric threaded holes.

**Numerous possible combinations**
Enclosures with Ex-protection are supplied exclusively with terminal strips that are already fitted. The product assistant offers you various approaches for industry variants so that you can create the right enclosure variant.

You can start off with any of the listed components and then add further components to the combination. This means that, for example, you can select the required terminal strip and the product assistant will then offer the matching enclosure variants.
Or, you can start with the enclosure, and matching terminal strips or mounting rails will then be chosen. The selected products can then be directly included in the query list.

**Provision of all relevant data**
During the selection, you can choose filters for the terminal strips, such as length, connection technology or dimensional cross-section and, for the enclosure, you can choose material, size, holes etc. If a product is then selected and combined, the user can view all of the relevant data, including drawings and pictures. This means that you can extensively plan how the enclosure will be integrated into the customer's application.
The product assistant is available at
**http://galaxy.weidmueller.com**

# Online product catalogue

If you have questions about the specifications and details of our products, perhaps even outside normal business hours, then our online catalogue at
**http://catalog.weidmueller.com**
is opened 24 hours a day, 365 days a year and is the perfect source for information. Besides product features and part numbers, it contains extensive additional information on all product groups.

For further information, offers and your personal contact, simply consult the Weidmüller website at

**www.weidmueller.com**

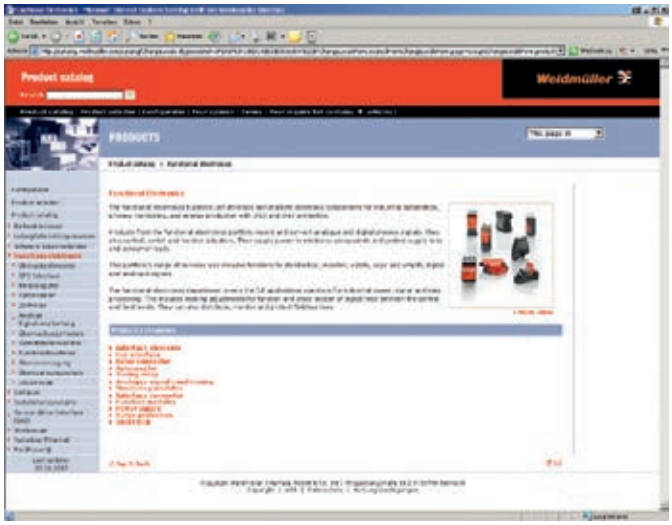


**With one click selection for the product data sheet of your choice.**

# M-Print® PRO label designer

The comprehensive range of Weidmüller services includes the M-Print® PRO software. This is a professional standard, Windows®-based program for printing and ordering labels and markers that is coordinated with our current printing systems and marking materials.

M-Print® PRO enables you to design your labelling materials professionally and quickly. Texts, borders, lines, graphics, barcodes, serial numbers and photographs are all possible. The interface to RailDesigner® or your CAE system enables the transfer of all your configured data.

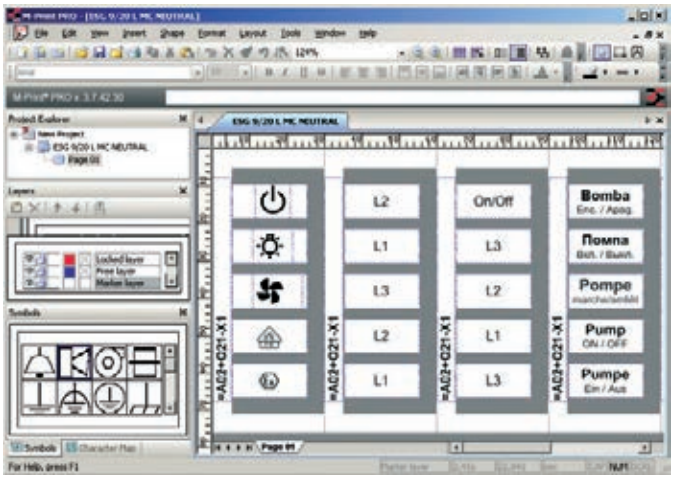

# Technical appendix


| | | |
|---|---|---|
| **Technical appendix** | ATEX directive 1999/92/EC | W.2 |
| | ATEX directive 94/9/EC | W.4 |
| | IECEx scheme | W.5 |
| | Classification of explosive groups in gas Ex protection | W.6 |
| | Classification of zones and equipment categories | W.6 |
| | Ratings plate of an empty enclosure | W.7 |
| | IP class of protection | W.8 |

# ATEX directive 1999/92/EC

Article 137 of the European Community Formation Treaty set out the minimum standards in order to improve workers' health and safety, this can also be put at risk by explosive atmospheres. An explosive atmosphere is a mixture of air and flammable gasses, vapours, mists or dust under atmospheric conditions where, following successful ignition, the burning process will propagate throughout the whole unburned mixture.

The ATEX directive 1999/92/EC was transferred into national law. Compliance with the minimum standards contained in this directive does not guarantee that all relevant national laws are met. It is possible for local regulators to introduce more stringent requirements.

The employer is required, according to the ATEX directive 1999/92/EC, to take measures to ensure the health and safety of the employees. One measure is the division of the area into zones where explosive atmospheres could be present.

Unless the risk analysis conducted by the employer indicates otherwise, all areas where an explosive atmosphere may be present must be equipped with devices and protective systems that meet the relevant category of the ATEX directive 94/9/EC.
In particular in these zones the following categories of equipment should be used, as long as they are suitable for use with gases, vapours, mists or dusts:

- In Zone 0 or Zone 20: category 1 devices,
- In Zone 1 or Zone 21: category 1 or category 2 devices,
- In Zone 2 or Zone 22: category 1, category 2 or category 3 devices.

**Zoning according to the ATEX directive 1999/92/EC**

**Zone 0**
An area which has a potentially explosive atmosphere that is a mixture of air and **flammable gases, vapours or mists**. The mixture is either permanently present or frequently present over long periods of time.

**Zone 1**
An area in which during normal operations a potentially explosive atmosphere of air and **flammable gases, vapours or mists** can occasionally form.

**Zone 2**
An area for which during normal operations there is at most only a short-term occurrence of a potentially explosive atmosphere of mixtures of air and **flammables gases, vapours or mists**.

**Zone 20**
An area where a potentially explosive atmosphere is present in the form of a **flammable dust** cloud in the air. This cloud is either permanently present or frequently present over long periods of time.

**Zone 21**
An area where, during normal operations, a potentially explosive atmosphere in the form of a **flammable dust** cloud in the air can occasionally form.

**Zone 22**
An area where, during normal operations, a potentially explosive atmosphere in the form of a **flammable dust** cloud in the air is not normally present or only present for a short time.

For the risk assessment and as well as the zoning concept described above, Ex devices themselves can be considered in an alternative process which uses the equipment protection level (EPL). These protective levels determine the internal ignition risk of a device where the sort of applied protection does not play a role.

The system of EPL classifications (Equipment Protection Level) is shown below.

**Firedamp (methane) risk mines (Group I)**

**EPL Ma**
Equipment for installation in mining applications, offering a „very high" level of protection and which do not constitute a source of ignition during normal operation, or in the event of rarely occurring faults.

**EPL Mb**
Equipment for installation in a mine with a high level of rotection. Has sufficient safety to ensure that there is no source of ignition in the period of time between the outbreak of gas and the time the equipment is switched off.

**Gases (Group II)**

**EPL Ga**
Equipment for explosive-risk gas atmospheres with a very high level of protection. No source of ignition is present during normal operation or when errors occur that cannot be necessarily expected on a regular basis.

**EPL Gb**
Equipment for explosive-risk gas atmospheres with a high level of protection. No source of ignition is present during normal operation or when errors occur that cannot be necessarily expected on a regular basis.

**EPL Gc**
Equipment for explosive-risk gas atmospheres with an elevated level of protection. No source of ignition is present during normal operation and it can have additional safeguards to ensure that none is present during faults which happen regularly (e. g. failure of a lamp).

**Dust (Group III)**

**EPL Da**
Equipment for combustible dust atmospheres with a very high level of protection. No source of ignition is present during normal operation or in very rare faults.

**EPL Db**
Equipment for combustible dust atmospheres with a high level of protection. No source of ignition is present during normal operation or when errors occur that cannot be necessarily expected on a regular basis.

**EPL Dc**
Equipment for combustible dust atmospheres with an elevated level of protection. No source of ignition is present during normal operation and it can have additional safeguards to ensure that none is present during faults which happen regularly (e. g. failure of a lamp).

# ATEX directive 94/9/EC

Article 95 of the European Community Formation Treaty deals with the equalization of laws of the Member States. The ATEX directive 94/9/EC sets out the basic requirements for health and safety protection as a directive following the new concept. It is aimed at manufacturers of equipment and components designed for used in potentially explosive atmosphere areas.

This directive had to be adopted without deviation into national law.
In Germany, this was implemented through the enactment of the Explosion Protection Regulation (11 ExVO) of the Equipment and Product Safety Law (GPSGV). It applies to all industrial potentially explosive areas, including mines, and also covers protection from dust-ignited explosions.

This directive sets out the requirements for the products depending on their equipment group and category. This is the category as set down by the ATEX directive 1999/92/EC applicable for each appropriate zone.

To prove conformity with the basic health and safety regulations, harmonised standards are used. If the requirements as laid out in the Official Journal of the EU are met, then it will be in compliance with the standard requirements for conformity (presumption of conformity). Various, mostly equivalent, protection types have been standardised harmoniously.

This conformity assessment process of the directives sets out different procedures. For device category 3, the manufacturer can perform the conformity assessment itself. For devices of categories 1 and 2, this conformity check must be carried out at a notified body in the form of a EC type-examination. In addition, quality assurance must be monitored for the devices of categories 1, 2 and 3.

Weidmüller has devices and components in its product range. Empty enclosures are components and are certified at the factory as such. Installing certified components does not create a certified equipment. To do this, additional tests must be carried out.

Weidmüller offers customer-specific devices available as certified solutions. The production of assembled enclosures is monitored by a notified body.

# IECEx scheme

The IECEx scheme is an international certification scheme for products which meet the requirements of the international standards, e.g. the technical committee TC31's IEC standards.

The certificates awarded in this scheme are published on the IECEx website (www.iecex.com) as an electronic certificate. They can be viewed online and printed out.

A Certificate of Conformity (CoC) refers to a test report (Ex Test Report ExTR) and on an assessment of the quality assessment report from the manufacturer (QAR).

The standards used for the production of the test report correspond almost entirely to the harmonised standards in Europe. Recent EN standards were initially adopted as IEC standards.

# Protection concepts

The zoning described above provides the basis for the selection of the type of ignition protection. So, as an example, in the ATEX applicable areas, only ignition protection devices meeting Ex ia for Zone 0 (highest probability of an explosive atmosphere being present) are allowed.

**Increased safety Ex e**
**No sparks and a surface temperature limited to a safe level**

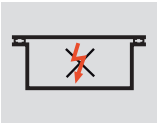

Increased safety is for products where there are no sparks produced during normal operation or in case of a failure. The surface temperature of the relevant parts is limited to a value below the ignition temperature. Increased safety is achieved by reducing the current load and raising the isolation properties and by maintaining clearance and creepage distances above the value in an industrial application. The highest voltage permitted for this protection scheme is 11 kV (D.C. or A.C. rms).

This protection scheme is usually used for distribution cabinets..

**Intrinsically safe Ex i**
**Limited to a safe level of ignition energy**

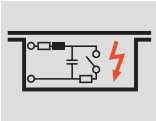

Intrinsic safety is for products where electrical energy which flows into the product, or is stored in the product, is not sufficient to ignite the surrounding explosive atmosphere. This also applies in fault conditions. The methods that achieve intrinsic safety mean that it is important that not only the devices installed in direct contact with the explosive atmosphere are constructed correctly, but also the electrical devices to which they are connected.

Intrinsically safe equipment and intrinsically safe parts of the associated equipment are divided into protection levels: ia (for zones 0, 1, and 2), ib (for zones 1 and 2), and ic (only for zone 2).

A typical application area are control and display circuits with low voltage and current.

**Pressure-resistant Ex d encapsulation**
**Limits the explosion to the inside of the enclosure**

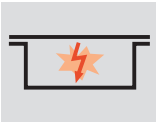

Pressure-resistant encapsulated enclosures are designed for devices where sparks are generated or which have hot surfaces which are a source of ignition during normal operation. Similarly, industrial components for use in potentially explosive atmospheres are often made suitable by encapsulating them in a pressure-resistant enclosure which otherwise could not be used.

The surrounding possibly explosive atmosphere can enter the enclosure and will produce an internal explosion during the equipment's lifespan.

The enclosure must therefore be stable enough to ensure that it is not deformed or destroyed by the pressure created. All connections of the enclosure are sized so that they cannot transmit an explosion from inside to the surrounding atmosphere. These connections are known as ignition gaps.

For this sort of ignition protection the explosion groups apply (IIA, IIB, IIC). Devices using this protection principle may not be installed in Zone 0.

## Classification of explosive groups in gas Ex protection

Flammable gases, vapours or mists are divided according to their ignition resistance capacity into the explosive groups IIA, IIB and IIC. This classification is based on the respective maximum experimental safe gap (MESG) and the minimum ignition current of the gases. The lower this value, the higher the danger presented by the gases. The danger of the gas increases from IIA to IIC so that all equipment certified for use in IIC areas may also be used in IIA and IIB areas.

| Explosion group | Maximum experimental safe gap (MESG) | Minimum ignition current |
|---|---|---|
| IIA | > 0.9 mm | > 0.8 |
| IIB | 0.5 mm to 0.9 mm | 0.45 to 0.8 |
| IIC | < 0.9 mm | < 0.45 |

## Definition of dust ignition protection

Dust refers to solid particles contained in the atmosphere, which eventually settle due to their own weight, but which for a time are present in the atmosphere as a dust-air mixture.

**Classification of zones and equipment categories**

| Combustible ingredients | Explosive atmospheres | Zone division | Identification | |
|---|---|---|---|---|
| | | | Equipment group | Device category |
| Gas, mist, vapours/fumes (G / Gas) | permanent, long-term | Zone 0 | II | 1G |
| | occasionally | Zone 1 | II | 2G |
| | unlikely, short-term | Zone 2 | II | 3G |
| Dusts (D / Dust) | permanent, long-term | Zone 20 | II | 1D |
| | occasionally | Zone 21 | II | 2D |
| | unlikely, short-term | Zone 22 | II | 3D |

# Ratings plate of an Ex-certified empty enclosure

1 Number of the notified body

2 Part No.

3 Part designation

4 Ex marking

5 Equipment group

6 Device category

7 • G Gas (gas)
• D flammable dust

8 Explosion protection type

9 IP ingress protection class (DIN EN 60529)

10 EC type-examination certificate

11 Year of manufacture

12 Name and address of manufacturer

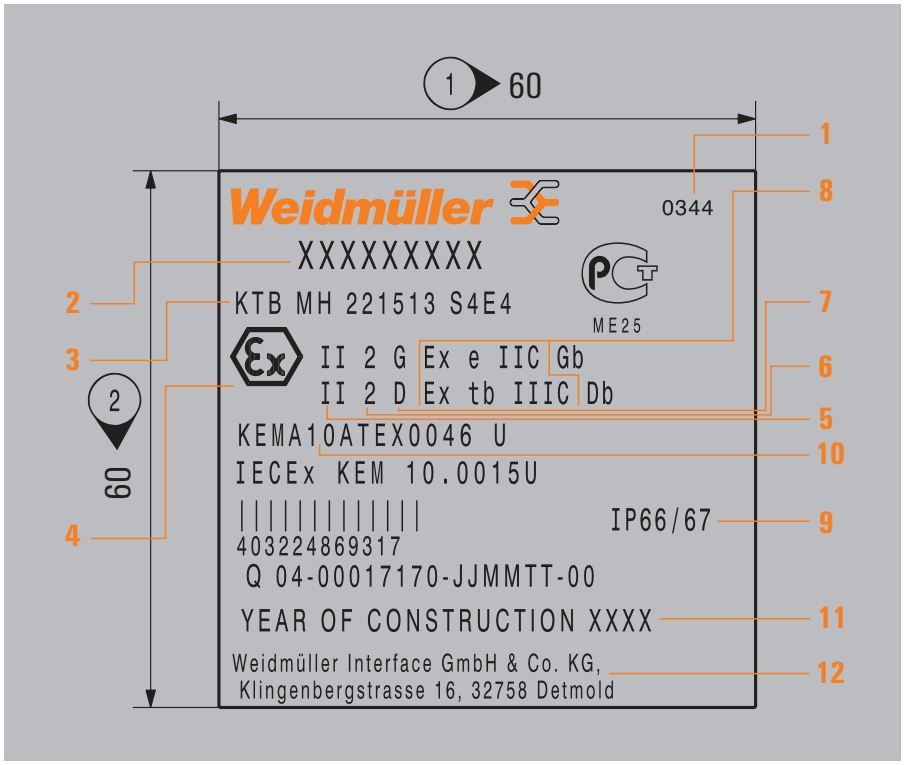

# IP class of protection to DIN EN 60529

The ingress protection class or IP rating is indicated by a code consisting of the two letters IP and two digits representing the class of protection.

Example: **I P 6 5**

2nd digit: protection from liquids
1st digit: protection from solid bodies

**Protection against intrusion of external particle matter (1st digit)**

| Code digit | | |
|---|---|---|
| 0 | 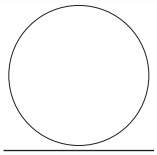 | No protection |
| 1 | | Protection against ingress of large solid bodies with diameter > 50 mm. (Protection to prevent dangerous parts being touched with the back of the hand.) |
| 2 | | Protection against ingress of large solid bodies with diameter > 12.5 mm. (Protection to prevent dangerous parts being touched with the fingers.) |
| 3 | | Protection against ingress of large solid bodies with diameter > 2.5 mm. (Protection to prevent dangerous parts being touched with a tool.) |
| 4 | | Protection against ingress of large solid bodies with diameter > 1 mm. (Protection to prevent dangerous parts being touched with a piece of wire.) |
| 5 | | Protection against harmful deposits of dust, which cannot enter in an amount sufficient to interfere with satisfactory operation. |
| 6 | | Complete protection against ingress of dust. |

**Protection against penetration of liquids (2nd digit)**

| Code digit | | |
|---|---|---|
| 0 | 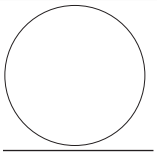 | No protection |
| 1 | 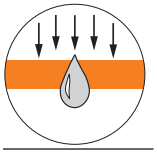 | Protection against drops of condensed water falling vertically. |
| 2 | 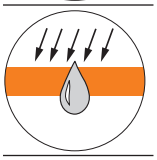 | Protection against drops of liquid falling at an angle of 15° with respect to the vertical. |
| 3 | 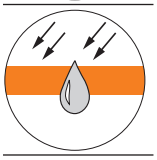 | Protection against drops of liquid falling at an angle of 60° with respect to the vertical. |
| 4 | 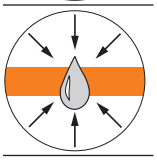 | Protection against liquids splashed from any direction. |
| 5 | 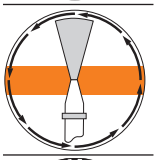 | Protection against water jets projected by a nozzle from any direction. |
| 6 | | Protection against water from heavy sea on ships'decks. |
| 7 | 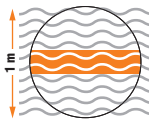  | Protection against immersion in water under defined conditions of pressure and time. |
| 8 | 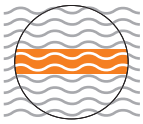 | Protection against indefinite immersion in water under defined conditions of pressure (which must be agreed between manufacturer and user and must be more adverse than number 7). |

# Definition of the protection degrees according to NEMA, UL and CSA

| Type | NEMA | UL | CSA |
|---|---|---|---|
| Designation | National Electrical Manufacturers Association<br>NEMA 250-1991 | Underwriters Laboratories Inc.<br>UL 50 und UL 508 | Canadian Standards Association<br>CSA-C22.2 No. 94-M91 |
| **Type 1** | Enclosure predominately for indoor use.<br>Protection against penetration by solid foreign bodies. | Enclosure predominately for indoor use.<br>Protection against penetration by solid foreign bodies. | Enclosure for general use.<br>Protection against accidental contact with live components. |
| **Type 2** | Enclosure predominately for indoor use.<br>Protection against penetration by solid foreign bodies and water. | Enclosure predominately for indoor use.<br>Protection against penetration by solid foreign bodies and water. | Enclosure for indoor use.<br>Protection against non-corrosive drops/splashes of liquid and foreign bodies. |
| **Type 3** | Enclosure predominately for indoor use.<br>Protection against penetration by rainfall and dust as well as damage due to ice formation. | Enclosure predominately for indoor use.<br>Protection against penetration by rainfall and dust as well as damage due to ice formation. | Enclosure for indoor or outdoor use.<br>Protection against penetration by rainfall and snow as well as damage due to ice formation. |
| **Type 3R** | Enclosure predominately for indoor use.<br>Protection against rain and snow as damage due to ice-formation. | Enclosure predominately for indoor use.<br>Protection against rain and snow as damage due to ice-formation. | Enclosure for indoor or outdoor use.<br>Protection against penetration by rainfall and snow as well as damage due to ice formation. |
| **Type 3S** | Enclosure predominately for indoor use.<br>Protection against rain, snow and foreign bodies.<br>External mechanisms can be operated despite ice accumulation. | Enclosure predominately for indoor use.<br>Protection against rain, snow and foreign bodies.<br>External mechanisms can be operated despite ice accumulation. | Enclosure for indoor or outdoor use.<br>Protection against rain, snow and foreign bodies.<br>External mechanisms can be operated despite ice accumulation. |
| **Type 4** | Enclosure for indoor or outdoor use.<br>Protection against rain, foreign bodies, splashing water and hose water as well as damage due to ice-formation on the outside of the enclosure. | Enclosure for indoor or outdoor use.<br>Protection against rain, foreign bodies, splashing water and hose water as well as damage due to ice-formation on the outside of the enclosure. | Enclosure for indoor or outdoor use.<br>Protection against rain, snow, foreign bodies, splashing water and hose water as well as damage due to ice-formation on the outside of the enclosure. |
| **Type 4X** | Enclosure for indoor or outdoor use.<br>Protection against corrosion, rain, foreign bodies, splashing water and hose water as well as damage due to ice-formation on the outside of the enclosure. | Enclosure for indoor or outdoor use.<br>Protection against corrosion, rain, foreign bodies, splashing water and hose water as well as damage due to ice-formation on the outside of the enclosure. | Enclosure for indoor or outdoor use.<br>Protection against rain, foreign bodies, splashing water and hose water as well as damage due to ice-formation on the outside of the enclosure. |
| **Type 6** | Enclosure for indoor or outdoor use.<br>Protection against hose water as well as against penetration by water during immersion; protection damage due to ice formation on the outside of the enclosure. | Enclosure for indoor or outdoor use.<br>Protection against hose water as well as against penetration by water during immersion; protection damage due to ice formation on the outside of the enclosure. | Enclosure for indoor or outdoor use.<br>Protection against penetration by water during immersion; protection damage due to ice formation on the outside of the enclosure. |
| **Type 12** | Enclosure for indoor use.<br>Protection against dust accumulation, foreign bodies and non-corrosive drops of liquids. | Enclosure for indoor use.<br>Protection against dust accumulation, foreign bodies and non-corrosive drops of liquids. | Enclosure for indoor or outdoor use.<br>Protection against a build-up of dust, fibres and foreign bodies as well as against non-corrosive liquid drips, without pre-formed openings. |
| **Type 13** | Enclosure for indoor use.<br>Protection against dust build-up, splashing water, oil, and non-corrosive coolants. | Enclosure for indoor use.<br>Protection against dust build-up, splashing water, oil, and non-corrosive coolants. | Enclosure for indoor or outdoor use.<br>Protection against a build-up of dust, fibres and foreign bodies as well as against non-corrosive liquid sprays including oil and coolants. |

# Index




| | | |
|---|---|---|
| **Index** | Index Type | X.2 |
| | Index Order No. | X.8 |
| | Addresses worldwide | X.16 |

| Type | Order No. | Page |
|---|---|---|
| **A** | | |
| ADAP EX 1 1/2-1 1/2NPT | 1738910000 | C.67 |
| ADAP EX 1 1/2NPT-1 1/4 | 1738800000 | C.67 |
| ADAP EX 1 1/2NPT-1/2NPT | 1738370000 | C.67 |
| ADAP EX 1 1/2NPT-1NPT | 1738680000 | C.67 |
| ADAP EX 1 1/2NPT-3/4NPT | 1738530000 | C.67 |
| ADAP EX 1 1/4-1 1/4NPT | 1738810000 | C.67 |
| ADAP EX 1 1/4NPT-1 1/2 | 1738920000 | C.67 |
| ADAP EX 1 1/4NPT-1/2NPT | 1738380000 | C.67 |
| ADAP EX 1 1/4NPT-1NPT | 1738690000 | C.67 |
| ADAP EX 1 1/4NPT-3/4NPT | 1738540000 | C.67 |
| ADAP EX 1/2NPT-3/4NPT | 1738570000 | C.67 |
| ADAP EX 1/2NPT-M16 | 1737490000 | C.67 |
| ADAP EX 1/2NPT-M20 | 1737650000 | C.67 |
| ADAP EX 1/2NPT-M25 | 1737810000 | C.67 |
| ADAP EX 1NPT-1 1/4NPT | 1738820000 | C.67 |
| ADAP EX 1NPT-1/2NPT | 1738390000 | C.67 |
| ADAP EX 1NPT-1NPT | 1738700000 | C.67 |
| ADAP EX 1NPT-3/4NPT | 1738550000 | C.67 |
| ADAP EX 1NPT-M20 | 1737630000 | C.67 |
| ADAP EX 1NPT-M25 | 1737790000 | C.67 |
| ADAP EX 1NPT-M40 | 1738070000 | C.67 |
| ADAP EX 2 1/2-2 1/2NPT | 1739050000 | C.67 |
| ADAP EX 2 1/2NPT-1 1/2 | 1738890000 | C.67 |
| ADAP EX 2 1/2NPT-1 1/4 | 1738780000 | C.67 |
| ADAP EX 2 1/2NPT-1/2 | 1738350000 | C.67 |
| ADAP EX 2 1/2NPT-1NPT | 1738660000 | C.67 |
| ADAP EX 2 1/2NPT-2NPT | 1738980000 | C.67 |
| ADAP EX 2 1/2NPT-3/4NPT | 1738510000 | C.67 |
| ADAP EX 2 1/2NPT-3NPT | 1739100000 | C.67 |
| ADAP EX 2 1/2NPT-M16 | 1737430000 | C.67 |
| ADAP EX 2 1/2NPT-M20 | 1737590000 | C.67 |
| ADAP EX 2 1/2NPT-M25 | 1737750000 | C.67 |
| ADAP EX 2 1/2NPT-M32 | 1737900000 | C.67 |
| ADAP EX 2 1/2NPT-M40 | 1738030000 | C.67 |
| ADAP EX 2 1/2NPT-M50 | 1738140000 | C.67 |
| ADAP EX 2 1/2NPT-M63 | 1738230000 | C.67 |
| ADAP EX 2 1/2NPT-M75 | 1738300000 | C.67 |
| ADAP EX 2NPT-1 1/2NPT | 1738900000 | C.67 |
| ADAP EX 2NPT-1 1/4NPT | 1738790000 | C.67 |
| ADAP EX 2NPT-1/2NPT | 1738360000 | C.67 |
| ADAP EX 2NPT-1NPT | 1738670000 | C.67 |
| ADAP EX 2NPT-2 1/2NPT | 1739060000 | C.67 |
| ADAP EX 2NPT-2NPT | 1738990000 | C.67 |
| ADAP EX 2NPT-3/4NPT | 1738520000 | C.67 |
| ADAP EX 2NPT-M16 | 1737440000 | C.67 |
| ADAP EX 2NPT-M20 | 1737600000 | C.67 |
| ADAP EX 2NPT-M25 | 1737760000 | C.67 |
| ADAP EX 2NPT-M32 | 1737910000 | C.67 |
| ADAP EX 2NPT-M40 | 1738040000 | C.67 |
| ADAP EX 2NPT-M50 | 1738150000 | C.67 |
| ADAP EX 2NPT-M63 | 1738240000 | C.67 |
| ADAP EX 2NPT-M75 | 1738310000 | C.67 |
| ADAP EX 3/4NPT-1/2NPT | 1738400000 | C.67 |
| ADAP EX 3/4NPT-3/4NPT | 1738560000 | C.67 |
| ADAP EX 3/4NPT-M20 | 1737640000 | C.67 |
| ADAP EX 3/4NPT-M25 | 1737800000 | C.67 |
| ADAP EX 3/4NPT-M32 | 1737950000 | C.67 |
| ADAP EX 3NPT-1 1/2NPT | 1738880000 | C.67 |
| ADAP EX 3NPT-1 1/4NPT | 1738770000 | C.67 |
| ADAP EX 3NPT-1/2NPT | 1738340000 | C.67 |
| ADAP EX 3NPT-1NPT | 1738650000 | C.67 |
| ADAP EX 3NPT-2 1/2NPT | 1739040000 | C.67 |
| ADAP EX 3NPT-2NPT | 1738970000 | C.67 |
| ADAP EX 3NPT-3/4NPT | 1738500000 | C.67 |
| ADAP EX 3NPT-3NPT | 1739090000 | C.67 |
| ADAP EX 3NPT-M16 | 1737420000 | C.67 |
| ADAP EX 3NPT-M20 | 1737580000 | C.67 |
| ADAP EX 3NPT-M25 | 1737740000 | C.67 |
| ADAP EX 3NPT-M32 | 1737890000 | C.67 |
| ADAP EX 3NPT-M40 | 1738020000 | C.67 |
| ADAP EX 3NPT-M50 | 1738130000 | C.67 |
| ADAP EX 3NPT-M63 | 1738220000 | C.67 |
| ADAP EX 3NPT-M75 | 1738290000 | C.67 |
| ADAP EX M16-M20 | 1737730000 | C.68 |
| ADAP EX M20-1/2NPT | 1738480000 | C.68 |
| ADAP EX M20-3/4NPT | 1738640000 | C.68 |
| ADAP EX M20-M16 | 1737560000 | B.154 |
| ADAP EX M20-M20 | 1737720000 | C.68 |
| ADAP EX M20-M25 | 1737880000 | C.68 |
| ADAP EX M25-1NPT | 1738760000 | C.68 |
| ADAP EX M25-3/4NPT | 1738630000 | C.68 |
| ADAP EX M25-M16 | 1737550000 | C.68 |
| ADAP EX M25-M20 | 1737710000 | C.68 |
| ADAP EX M25-M32 | 1738010000 | C.68 |
| ADAP EX M32-1 1/4NPT | 1738870000 | C.68 |
| ADAP EX M32-1/2NPT | 1738460000 | C.68 |
| ADAP EX M32-1NPT | 1738750000 | C.68 |
| ADAP EX M32-M16 | 1737540000 | C.68 |
| ADAP EX M32-M20 | 1737700000 | C.68 |
| ADAP EX M32-M25 | 1737860000 | C.68 |
| ADAP EX M32-M40 | 1738120000 | C.68 |
| ADAP EX M40-1/2NPT | 1738450000 | C.68 |
| ADAP EX M40-1NPT | 1738740000 | C.68 |
| ADAP EX M40-3/4NPT | 1738610000 | C.68 |
| ADAP EX M40-M16 | 1737530000 | C.68 |
| ADAP EX M40-M20 | 1737690000 | C.68 |
| ADAP EX M40-M25 | 1737850000 | C.68 |
| ADAP EX M40-M32 | 1737990000 | C.68 |
| ADAP EX M40-M40 | 1738110000 | C.68 |
| ADAP EX M40-M50 | 1738210000 | C.68 |
| ADAP EX M50-1 1/4NPT | 1738850000 | C.68 |
| ADAP EX M50-1/2NPT | 1738440000 | C.68 |
| ADAP EX M50-1NPT | 1738730000 | C.68 |
| ADAP EX M50-3/4NPT | 1738600000 | C.68 |
| ADAP EX M50-M16 | 1737520000 | C.68 |
| ADAP EX M50-M20 | 1737680000 | C.68 |
| ADAP EX M50-M25 | 1737840000 | C.68 |
| ADAP EX M50-M32 | 1737980000 | C.68 |
| ADAP EX M50-M40 | 1738100000 | C.68 |
| ADAP EX M50-M63 | 1738280000 | C.68 |
| ADAP EX M63-1 1/2NPT | 1738940000 | C.68 |
| ADAP EX M63-1 1/4NPT | 1738840000 | C.68 |
| ADAP EX M63-1/2NPT | 1738430000 | C.68 |
| ADAP EX M63-1NPT | 1738720000 | C.68 |
| ADAP EX M63-2 1/2NPT | 1739080000 | C.68 |
| ADAP EX M63-3/4NPT | 1738590000 | C.68 |
| ADAP EX M63-M16 | 1737510000 | C.68 |
| ADAP EX M63-M20 | 1737670000 | C.68 |
| ADAP EX M63-M25 | 1737830000 | C.68 |
| ADAP EX M63-M32 | 1737970000 | C.68 |
| ADAP EX M63-M40 | 1738090000 | C.68 |
| ADAP EX M63-M50 | 1738190000 | C.68 |
| ADAP EX M63-M75 | 1738330000 | C.68 |
| ADAP EX M75-1 1/2NPT | 1738930000 | C.68 |
| ADAP EX M75-1 1/4NPT | 1738830000 | C.68 |
| ADAP EX M75-1/2NPT | 1738420000 | C.68 |
| ADAP EX M75-1NPT | 1738710000 | C.68 |
| ADAP EX M75-2 1/2NPT | 1739070000 | C.68 |
| ADAP EX M75-2NPT | 1739010000 | C.68 |
| ADAP EX M75-3/4NPT | 1738580000 | C.68 |
| ADAP EX M75-3NPT | 1739110000 | C.68 |
| ADAP EX M75-M16 | 1737500000 | C.68 |
| ADAP EX M75-M20 | 1737660000 | C.68 |
| ADAP EX M75-M25 | 1737820000 | C.68 |
| ADAP EX M75-M32 | 1737960000 | C.68 |
| ADAP EX M75-M40 | 1738080000 | C.68 |
| ADAP EX M75-M50 | 1738180000 | C.68 |
| ADAP EX M75-M63 | 1738260000 | C.68 |
| ADAPAP EX 1/2NPT-1/2NPT | 1738410000 | C.67 |
| **B** | | |
| BD 1 brass | 3080760000 | C.71 |
| BD 1 ss | 3080770000 | C.71 |
| BK 4/E | 7906080000 | B.150 |
| **C** | | |
| CABTITE KEL 16/2 | 1825860000 | D.5 |
| CABTITE KEL 16/4 | 1825900000 | D.5 |
| CABTITE KEL 16/4 EMV | 1825750000 | D.8 |
| CABTITE KEL 16/5 | 1849770000 | D.5 |
| CABTITE KEL 16/8 | 1825910000 | D.5 |
| CABTITE KEL 24/10 | 1827760000 | D.5 |
| CABTITE KEL 24/4 | 1825930000 | D.5 |
| CABTITE KEL 24/5 | 1825940000 | D.5 |
| CABTITE KEL 24/5 EMV | 1825760000 | D.8 |
| CABTITE KEL 24/7 | 1849760000 | D.5 |
| CABTITE KEL B1 | 1048170000 | D.6 |
| CABTITE KEL B4 | 1048180000 | D.6 |
| CABTITE KEL SNAP 16 | 1827770000 | D.5 |
| CABTITE KEL SNAP 24 | 1827780000 | D.5 |
| CABTITE KEL SNAP B4 | 1048190000 | D.6 |
| CABTITE KEL-DP 24/14 | 1039850000 | D.7 |
| CABTITE KEL-DP 24/17 | 1039870000 | D.7 |
| CABTITE KEL-DP 24/19 | 1039890000 | D.7 |
| CABTITE KEL-DP 24/26 | 1039930000 | D.7 |
| CABTITE KEL-DP 24/48 | 1039940000 | D.7 |
| CABTITE KEL-DP 24/50 | 1039950000 | D.7 |
| CABTITE KEL-DP 32/10 | 1040310000 | D.7 |
| CABTITE KEL-DP 32/10/2 | 1040120000 | D.7 |
| CABTITE KEL-DP 50/12 | 1040330000 | D.7 |
| CABTITE KEL-DP 50/12/2 | 1040160000 | D.7 |
| CABTITE KEL-DP 50/16 | 1040350000 | D.7 |
| CABTITE KEL-DP 50/16/2 | 1040180000 | D.7 |
| CABTITE KEL-DP 50/18 | 1040360000 | D.7 |
| CABTITE KEL-DP 50/18/2 | 1040210000 | D.7 |
| CABTITE KEL-DP 50/20 | 1040370000 | D.7 |
| CABTITE KEL-DP 50/20/2 | 1040240000 | D.7 |
| CABTITE KEL-DP 50/9 | 1040320000 | D.7 |
| CABTITE KEL-DP 50/9/2 | 1040130000 | D.7 |
| CABTITE KT 10 | 1826530000 | D.3 |
| CABTITE KT 10 b | 1827870000 | D.3 |
| CABTITE KT 11 | 1826540000 | D.3 |
| CABTITE KT 11 b | 1827880000 | D.3 |
| CABTITE KT 12 | 1826550000 | D.3 |
| CABTITE KT 12 b | 1827890000 | D.3 |
| CABTITE KT 13 | 1826560000 | D.3 |
| CABTITE KT 13 b | 1827900000 | D.3 |
| CABTITE KT 14 | 1826570000 | D.3 |
| CABTITE KT 14 b | 1827910000 | D.3 |
| CABTITE KT 15 | 1826580000 | D.3 |
| CABTITE KT 15 b | 1827920000 | D.3 |
| CABTITE KT 16 | 1825950000 | D.3 |
| CABTITE KT 16 b | 1827950000 | D.3 |
| CABTITE KT 17 | 1826300000 | D.3 |
| CABTITE KT 17 b | 1827960000 | D.3 |
| CABTITE KT 18 | 1826310000 | D.3 |
| CABTITE KT 18 b | 1827970000 | D.3 |
| CABTITE KT 19 | 1826320000 | D.3 |
| CABTITE KT 19 b | 1827980000 | D.3 |
| CABTITE KT 2/4 | 1826620000 | D.3 |
| CABTITE KT 2/4 b | 1828130000 | D.3 |
| CABTITE KT 2/5 | 1826630000 | D.3 |
| CABTITE KT 2/5 b | 1828140000 | D.3 |
| CABTITE KT 2/6 | 1826640000 | D.3 |
| CABTITE KT 2/6 b | 1828150000 | D.3 |
| CABTITE KT 20 | 1826330000 | D.3 |
| CABTITE KT 20 b | 1827990000 | D.3 |
| CABTITE KT 21 | 1826340000 | D.3 |
| CABTITE KT 21 b | 1828000000 | D.3 |
| CABTITE KT 22 | 1826350000 | D.3 |
| CABTITE KT 22 b | 1828010000 | D.3 |
| CABTITE KT 23 | 1826360000 | D.3 |
| CABTITE KT 23 b | 1828020000 | D.3 |
| CABTITE KT 24 | 1826370000 | D.3 |
| CABTITE KT 24 b | 1828030000 | D.3 |
| CABTITE KT 25 | 1826380000 | D.3 |
| CABTITE KT 25 b | 1828040000 | D.3 |
| CABTITE KT 26 | 1826390000 | D.3 |
| CABTITE KT 26 b | 1828050000 | D.3 |
| CABTITE KT 27 | 1826400000 | D.3 |
| CABTITE KT 27 b | 1828060000 | D.3 |
| CABTITE KT 28 | 1826410000 | D.3 |
| CABTITE KT 28 b | 1828070000 | D.3 |
| CABTITE KT 29 | 1826420000 | D.3 |
| CABTITE KT 29 b | 1828080000 | D.3 |
| CABTITE KT 3 | 1826460000 | D.3 |
| CABTITE KT 3 b | 1827790000 | D.3 |
| CABTITE KT 30 | 1826430000 | D.3 |
| CABTITE KT 30 b | 1828090000 | D.3 |
| CABTITE KT 32 | 1826440000 | D.3 |
| CABTITE KT 32 b | 1828100000 | D.3 |
| CABTITE KT 34 | 1826450000 | D.3 |
| CABTITE KT 34 b | 1828110000 | D.3 |
| CABTITE KT 4 | 1826470000 | D.3 |
| CABTITE KT 4 b | 1827800000 | D.3 |
| CABTITE KT 4/5 | 1826650000 | D.3 |
| CABTITE KT 4/5 b | 1828160000 | D.3 |
| CABTITE KT 5 | 1826480000 | D.3 |
| CABTITE KT 5 b | 1827810000 | D.3 |
| CABTITE KT 6 | 1826490000 | D.3 |
| CABTITE KT 6 b | 1827830000 | D.3 |
| CABTITE KT 7 | 1826500000 | D.3 |
| CABTITE KT 7 b | 1827840000 | D.3 |
| CABTITE KT 8 | 1826510000 | D.3 |
| CABTITE KT 8 b | 1827850000 | D.3 |
| CABTITE KT 9 | 1826520000 | D.3 |
| CABTITE KT 9 b | 1827860000 | D.3 |
| CABTITE KT ASI | 1826610000 | D.3 |
| CABTITE KT ASI b | 1828120000 | D.3 |
| CABTITE KT ATG | 1828190000 | D.3 |
| CABTITE KT ATG b | 1828220000 | D.3 |
| CABTITE KT BTG | 1828180000 | D.3 |
| CABTITE KT BTG b | 1828210000 | D.3 |
| CABTITE KT BTK | 1828170000 | D.3 |
| CABTITE KT BTK b | 1828200000 | D.3 |
| CABTITE KTs 16 | 1826590000 | D.3 |
| CABTITE KTs 16 b | 1827930000 | D.3 |
| CABTITE KTs 17 | 1826600000 | D.3 |
| CABTITE KTs 17 b | 1827940000 | D.3 |
| CABTITE KV T 25 | 1826660000 | D.10 |
| CABTITE KV T 32 | 1826670000 | D.10 |
| CABTITE KV T 63-1 | 1828240000 | D.10 |
| CABTITE KV T 63-4 | 1828230000 | D.10 |
| CABTITE KZL 140 C | 1040030000 | D.9 |
| CABTITE KZL 140 TS39 | 1039960000 | D.9 |
| CABTITE KZL 39 C | 1040080000 | D.9 |
| CABTITE KZL 39 TS35 | 1039990000 | D.9 |
| CABTITE KZL 80 C | 1040060000 | D.9 |
| CABTITE KZL 80 TS35 | 1039970000 | D.9 |
| Cabtite Sample Kit | 1849780000 | D.2 |
| CABTITE SUBD9 | 1828250000 | D.10 |
| CROSS-KEY MASTER | 9918150000 | E.23 |
| CROSS-KEY UNIVERSAL | 9918130000 | E.23 |
| CROSS-KEY UNIVERSAL S | 9918140000 | E.23 |
| **D** | | |
| DAE M12 PA long | 1868570000 | C.69 |
| DAE M12 PA short | 1868560000 | C.69 |
| DAE M12 SS | 1868550000 | C.70 |
| DESC M6X14 KTB SET | 1253230000 | B.15 |
| DMS MANUELL 0,5-1,7 | 9918370000 | E.11 |
| DMS MANUELL 2,0-8,0 | 9918380000 | E.11 |
| DMSI MANUELL 0,5-1,7 | 9918390000 | E.12 |
| DMSI MANUELL 2,0-8,0 | 9918400000 | E.12 |
| DOHA KTB A4 S2 R | 1252730000 | B.26 |
| DOHA KTB A5 S2 R | 1252750000 | B.24 |
| DOHA KTB A6 S2 R | 1252780000 | B.16 |
| **E** | | |
| EA-RING MS/M 16 | 1736480000 | C.55 |
| EA-RING MS/M 20 | 1736490000 | C.55 |
| EA-RING MS/M 25 | 1736500000 | C.55 |
| EA-RING MS/M 32 | 1736510000 | C.55 |
| EA-RING MS/M 40 | 1736520000 | C.55 |
| EA-RING MS/M 50 | 1736530000 | C.55 |
| EA-RING MS/M 63 | 1736540000 | C.55 |
| EA-RING MS/M 75 | 1736550000 | C.55 |
| EA-RING MS/M16 SC | 0930710001 | C.56 |
| EA-RING MS/M20 SC | 0930710002 | C.56 |
| EA-RING MS/M25 SC | 0930710003 | C.56 |
| EA-RING MS/M32 SC | 0930710004 | C.56 |
| EA-RING MS/M40 SC | 0930710005 | C.56 |
| EA-RING MS/M50 SC | 0930710006 | C.56 |
| EA-RING MS/M63 SC | 0930710007 | C.56 |
| EA-RING MS/M75 SC | 0930710008 | C.56 |
| EB K51/POK5 | 9511210000 | B.143 |
| EB K52/POK | 9511220000 | B.144 |
| EB K61/POK6 | 9511230000 | B.146 |
| EB K71/POK10 | 9511190000 | B.148 |
| EF TBF 19/15 | 9502930000 | B.194 |
| EF TBF 30/30 | 9502950000 | B.195 |
| EF TBF 37/30 | 9502960000 | B.195 |
| EF TBF 60/30 | 9502990000 | B.197 |
| EF TBF 60/37 | 9503000000 | B.198 |
| EF TBF 60/60 | 9503010000 | B.198 |
| ES TBF M10 brass | 9502710000 | B.194 |
| ES TBF M10 ss | 9500870000 | B.194 |
| ES TBF M6 brass | 9502700000 | B.194 |
| ES TBF M6 ss | 9505240000 | B.194 |
| EWS M 25X1,5 | 1719740000 | C.72 |
| **F** | | |
| FKSC M6X8 D9/SW3 | 0642600000 | B.15 |
| FLECAFIX 11/24 | 9015900000 | E.13 |
| FLECAFIX 24/36 | 9015980000 | E.13 |
| FPC 20/20/13 7035 | 9535690000 | B.209 |
| FPC 20/20/13 trsp | 9535680000 | B.209 |
| FPC 20/30/13 7035 | 9535710000 | B.209 |
| FPC 20/30/13 trsp | 9535700000 | B.209 |
| FPC 20/40/13 7035 | 9535730000 | B.210 |
| FPC 20/40/13 trsp | 9535720000 | B.210 |
| FPC 30/30/13 7035 | 9535750000 | B.210 |
| FPC 30/30/13 trsp | 9535740000 | B.210 |
| FPC 30/40/13 7035 | 9535770000 | B.211 |
| FPC 30/40/13 trsp | 9535760000 | B.211 |
| FPC 40/60/13 7035 | 9535810000 | B.211 |
| FPC 40/60/13 trsp | 9535820000 | B.211 |
| **G** | | |
| GFSC M5x10 TX20 SET | 1274150000 | B.15 |
| GWDR M12-NP | 1913320000 | C.52 |
| GWDR M12-PO | 1777920000 | C.51 |
| GWDR M16-NP | 1736230000 | C.52 |
| GWDR M16-PO | 1777930000 | C.51 |
| GWDR M20-NP | 1736240000 | C.52 |
| GWDR M20-PO | 1777940000 | C.51 |
| GWDR M25-NP | 1736250000 | C.52 |
| GWDR M25-PO | 1777950000 | C.51 |
| GWDR M32-NP | 1736260000 | C.52 |
| GWDR M32-PO | 1777960000 | C.51 |
| GWDR M40-NP | 1736270000 | C.52 |
| GWDR M40-PO | 1777970000 | C.51 |
| GWDR M50-NP | 1736280000 | C.52 |
| GWDR M50-PO | 1777980000 | C.51 |
| GWDR M63-NP | 1736290000 | C.52 |
| GWDR M63-PO | 1777990000 | C.51 |
| GWDR PG11-NP | 1719560000 | C.52 |
| GWDR PG11-PO | 1719460000 | C.51 |
| GWDR PG13,5-NP | 1719570000 | C.52 |
| GWDR PG13,5-PO | 1719470000 | C.51 |
| GWDR PG16-NP | 1719580000 | C.52 |
| GWDR PG16-PO | 1719480000 | C.51 |
| GWDR PG21-NP | 1719590000 | C.52 |
| GWDR PG21-PO | 1719490000 | C.51 |
| GWDR PG29-NP | 1719600000 | C.52 |
| GWDR PG29-PO | 1719500000 | C.51 |
| GWDR PG36-NP | 1719610000 | C.52 |
| GWDR PG36-PO | 1719510000 | C.51 |
| GWDR PG42-NP | 1719620000 | C.52 |
| GWDR PG42-PO | 1719520000 | C.51 |
| GWDR PG48-NP | 1719630000 | C.52 |
| GWDR PG48-PO | 1719530000 | C.51 |
| GWDR PG7-NP | 1719540000 | C.52 |
| GWDR PG7-PO | 1719440000 | C.51 |
| GWDR PG9-NP | 1719550000 | C.52 |
| GWDR PG9-PO | 1719450000 | C.51 |
| **H** | | |
| HG FPC | 9535990000 | B.209 |
| HG K+POK | 1580360000 | B.134 |
| HG MPC | 9535590000 | B.202 |
| **I** | | |
| IE-KO-HAT | 1966810000 | E.5 |
| IE-KOK-V1 | 1966780000 | E.6 |
| IE-KOK-V14 | 1135240000 | E.6 |

| Type | Order No. | Page |
|---|---|---|
| IE-KOK-V4 | 1966790000 | E.6 |
| IE-KOK-V5 | 9204790000 | E.6 |
| IS 2 KG | 1806630000 | E.22 |
| IS 3 KG | 1806650000 | E.22 |
| IS 4 DIN 6911 | 0485100000 | E.22 |
| IS 4 KG | 1806660000 | E.22 |
| IS 6 DIN 6911 | 0407900000 | E.22 |
| IS 8 DIN 6911 | 0235000000 | E.22 |

# K

| Type | Order No. | Page |
|---|---|---|
| KDSU M20 BN O NI 1 G16 | 1083280000 | C.31 |
| KDSU M20 BN O NI 1 G20 | 1083320000 | C.31 |
| KDSU M20 BN O NI 1 G20S | 1083290000 | C.31 |
| KDSU M20 BN O NI 2 G16 | 1911380000 | C.31 |
| KDSU M20 BN O NI 2 G20 | 1911400000 | C.31 |
| KDSU M20 BN O NI 2 G20S | 1911390000 | C.31 |
| KDSU M20 BN O SC 1 G16 | 1076120000 | C.30 |
| KDSU M20 BN O SC 1 G20 | 1076140000 | C.30 |
| KDSU M20 BN O SC 1 G20S | 1076130000 | C.30 |
| KDSU M20 BN O SC 2 G16 | 1909260000 | C.30 |
| KDSU M20 BN O SC 2 G20 | 1909300000 | C.30 |
| KDSU M20 BN O SC 2 G20S | 1909290000 | C.30 |
| KDSU M20 BS O NI 1 G16 | 0930001221 | C.33 |
| KDSU M20 BS O NI 1 G20 | 0930021221 | C.33 |
| KDSU M20 BS O NI 1 G20S | 0930011223 | C.33 |
| KDSU M20 BS O NI 2 G16 | 0930001222 | C.33 |
| KDSU M20 BS O NI 2 G20 | 0930021222 | C.33 |
| KDSU M20 BS O NI 2 G20S | 0930011224 | C.33 |
| KDSU M20 BS O SC 1 G16 | 0930001211 | C.32 |
| KDSU M20 BS O SC 1 G20 | 0930021211 | C.32 |
| KDSU M20 BS O SC 1 G20S | 0930011213 | C.32 |
| KDSU M20 BS O SC 2 G16 | 0930001212 | C.32 |
| KDSU M20 BS O SC 2 G20 | 0930021212 | C.32 |
| KDSU M20 BS O SC 2 G20S | 0930011214 | C.32 |
| KDSU M25 BN O NI 1 G25 | 1083330000 | C.31 |
| KDSU M25 BN O NI 2 G25 | 1911420000 | C.31 |
| KDSU M25 BN O SC 1 G25 | 1076150000 | C.30 |
| KDSU M25 BN O SC 2 G25 | 1909310000 | C.30 |
| KDSU M25 BS O NI 1 G25 | 0930031221 | C.33 |
| KDSU M25 BS O NI 2 G25 | 0930031222 | C.33 |
| KDSU M25 BS O SC 1 G25 | 0930031211 | C.32 |
| KDSU M25 BS O SC 2 G25 | 0930031212 | C.32 |
| KDSU M32 BN O NI 1 G32 | 1083340000 | C.31 |
| KDSU M32 BN O NI 2 G32 | 1911430000 | C.31 |
| KDSU M32 BN O SC 1 G32 | 1076160000 | C.30 |
| KDSU M32 BN O SC 2 G32 | 1909320000 | C.30 |
| KDSU M32 BS O NI 1 G32 | 0930041221 | C.33 |
| KDSU M32 BS O NI 2 G32 | 0930041222 | C.33 |
| KDSU M32 BS O SC 1 G32 | 0930041211 | C.32 |
| KDSU M32 BS O SC 2 G32 | 0930041212 | C.32 |
| KDSU M40 BN O NI 1 G40 | 1083350000 | C.31 |
| KDSU M40 BN O NI 2 G40 | 1911440000 | C.31 |
| KDSU M40 BN O SC 1 G40 | 1076170000 | C.30 |
| KDSU M40 BN O SC 2 G40 | 1909330000 | C.30 |
| KDSU M40 BS O NI 1 G40 | 1136990000 | C.33 |
| KDSU M40 BS O NI 2 G40 | 0930051222 | C.33 |
| KDSU M40 BS O SC 1 G40 | 1136870000 | C.32 |
| KDSU M40 BS O SC 2 G40 | 0930051212 | C.32 |
| KDSU M50 BN O NI 1 G50 | 1083370000 | C.31 |
| KDSU M50 BN O NI 1 G50S | 1083360000 | C.31 |
| KDSU M50 BN O NI 2 G50 | 1911460000 | C.31 |
| KDSU M50 BN O NI 2 G50S | 1911450000 | C.31 |
| KDSU M50 BN O SC 1 G50 | 1076190000 | C.30 |
| KDSU M50 BN O SC 1 G50S | 1076180000 | C.30 |
| KDSU M50 BN O SC 2 G50 | 1909350000 | C.30 |
| KDSU M50 BN O SC 2 G50S | 1909340000 | C.30 |
| KDSU M50 BS O NI 1 G50 | 1137010000 | C.33 |
| KDSU M50 BS O NI 1 G50S | 1137000000 | C.33 |
| KDSU M50 BS O NI 2 G50 | 1137020000 | C.33 |
| KDSU M50 BS O NI 2 G50S | 0930061224 | C.33 |
| KDSU M50 BS O SC 1 G50 | 1136890000 | C.32 |
| KDSU M50 BS O SC 1 G50S | 0930061213 | C.32 |
| KDSU M50 BS O SC 2 G50 | 1136910000 | C.32 |
| KDSU M50 BS O SC 2 G50S | 1136880000 | C.32 |
| KDSU M63 BN O NI 1 G63 | 1083390000 | C.31 |
| KDSU M63 BN O NI 1 G63S | 1083380000 | C.31 |
| KDSU M63 BN O NI 2 G63 | 1911490000 | C.31 |
| KDSU M63 BN O NI 2 G63S | 1911480000 | C.31 |
| KDSU M63 BN O SC 1 G63 | 1076210000 | C.30 |
| KDSU M63 BN O SC 1 G63S | 1076200000 | C.30 |
| KDSU M63 BN O SC 2 G63 | 1909370000 | C.30 |
| KDSU M63 BN O SC 2 G63S | 1909360000 | C.30 |
| KDSU M63 BS O NI 1 G63 | 1137050000 | C.33 |
| KDSU M63 BS O NI 1 G63S | 1137030000 | C.33 |
| KDSU M63 BS O NI 2 G63 | 0930091222 | C.33 |
| KDSU M63 BS O NI 2 G63S | 1137040000 | C.33 |
| KDSU M63 BS O SC 1 G63 | 1136940000 | C.32 |
| KDSU M63 BS O SC 1 G63S | 1136920000 | C.32 |
| KDSU M63 BS O SC 2 G63 | 1136950000 | C.32 |
| KDSU M63 BS O SC 2 G63S | 1136930000 | C.32 |
| KDSU M75 BN O NI 1 G75 | 1083420000 | C.31 |
| KDSU M75 BN O NI 1 G75S | 1083400000 | C.31 |
| KDSU M75 BN O NI 2 G75 | 1083430000 | C.31 |
| KDSU M75 BN O NI 2 G75S | 1083410000 | C.31 |
| KDSU M75 BN O SC 1 G75 | 1076240000 | C.30 |
| KDSU M75 BN O SC 1 G75S | 1076220000 | C.30 |
| KDSU M75 BN O SC 2 G75 | 1076260000 | C.30 |
| KDSU M75 BN O SC 2 G75S | 1076230000 | C.30 |
| KDSU M75 BS O NI 1 G75 | 1137080000 | C.33 |
| KDSU M75 BS O NI 1 G75S | 1137060000 | C.33 |
| KDSU M75 BS O NI 2 G75 | 1137090000 | C.33 |
| KDSU M75 BS O NI 2 G75S | 1137070000 | C.33 |
| KDSU M75 BS O SC 1 G75 | 1136980000 | C.32 |
| KDSU M75 BS O SC 1 G75S | 1136960000 | C.32 |
| KDSU M75 BS O SC 2 G75 | 0930111212 | C.32 |
| KDSU M75 BS O SC 2 G75S | 1136970000 | C.32 |
| KDSW M20 BN L NI 1 G16 | 1074660000 | C.39 |
| KDSW M20 BN L NI 1 G20 | 1074760000 | C.39 |
| KDSW M20 BN L NI 1 G20S | 1074720000 | C.39 |
| KDSW M20 BN L NI 2 G16 | 1074690000 | C.39 |
| KDSW M20 BN L NI 2 G20 | 1074780000 | C.39 |
| KDSW M20 BN L NI 2 G20S | 1074740000 | C.39 |
| KDSW M20 BN L SC 1 G16 | 1076250000 | C.38 |
| KDSW M20 BN L SC 1 G20 | 1076300000 | C.38 |
| KDSW M20 BN L SC 1 G20S | 1076280000 | C.38 |
| KDSW M20 BN L SC 2 G16 | 1076270000 | C.38 |
| KDSW M20 BN L SC 2 G20 | 1076310000 | C.38 |
| KDSW M20 BN L SC 2 G20S | 1076290000 | C.38 |
| KDSW M20 BN O NI 1 G16 | 1075030000 | C.35 |
| KDSW M20 BN O NI 1 G20 | 1075070000 | C.35 |
| KDSW M20 BN O NI 1 G20S | 1075050000 | C.35 |
| KDSW M20 BN O NI 2 G16 | 1075040000 | C.35 |
| KDSW M20 BN O NI 2 G20 | 1075080000 | C.35 |
| KDSW M20 BN O NI 2 G20S | 1075060000 | C.35 |
| KDSW M20 BN O SC 1 G16 | 1074480000 | C.34 |
| KDSW M20 BN O SC 1 G20 | 1074520000 | C.34 |
| KDSW M20 BN O SC 1 G20S | 1074500000 | C.34 |
| KDSW M20 BN O SC 2 G20 | 1074530000 | C.34 |
| KDSW M20 BN O SC 2 G20S | 1074510000 | C.34 |
| KDSW M20 BS O NI 1 G16 | 1136410000 | C.37 |
| KDSW M20 BS O NI 1 G20 | 1136450000 | C.37 |
| KDSW M20 BS O NI 1 G20S | 1136430000 | C.37 |
| KDSW M20 BS O NI 2 G16 | 1136420000 | C.37 |
| KDSW M20 BS O NI 2 G20 | 1136460000 | C.37 |
| KDSW M20 BS O NI 2 G20S | 1136440000 | C.37 |
| KDSW M20 BS O SC 1 G16 | 1136160000 | C.36 |
| KDSW M20 BS O SC 1 G20 | 1136200000 | C.36 |
| KDSW M20 BS O SC 1 G20S | 1136180000 | C.36 |
| KDSW M20 BS O SC 2 G16 | 1136170000 | C.36 |
| KDSW M20 BS O SC 2 G20 | 1136210000 | C.36 |
| KDSW M20 BS O SC 2 G20S | 1136190000 | C.36 |
| KDSW M20BN O SC 2 G16 | 1074490000 | C.34 |
| KDSW M25 BN L NI 1 G25 | 1074810000 | C.39 |
| KDSW M25 BN L NI 2 G25 | 1074830000 | C.39 |
| KDSW M25 BN L SC 1 G25 | 1076320000 | C.38 |
| KDSW M25 BN L SC 2 G25 | 1076330000 | C.38 |
| KDSW M25 BN O NI 1 G25 | 1075090000 | C.35 |
| KDSW M25 BN O NI 2 G25 | 1075110000 | C.35 |
| KDSW M25 BN O SC 1 G25 | 1074540000 | C.34 |
| KDSW M25 BN O SC 2 G25 | 1074550000 | C.34 |
| KDSW M25 BS O NI 1 G25 | 1136470000 | C.37 |
| KDSW M25 BS O NI 2 G25 | 1136480000 | C.37 |
| KDSW M25 BS O SC 1 G25 | 1136220000 | C.36 |
| KDSW M25 BS O SC 2 G25 | 1136230000 | C.36 |
| KDSW M32 BN L NI 1 G32 | 1074850000 | C.39 |
| KDSW M32 BN L NI 2 G32 | 1074860000 | C.39 |
| KDSW M32 BN L SC 1 G32 | 1076340000 | C.38 |
| KDSW M32 BN L SC 2 G32 | 1076350000 | C.38 |
| KDSW M32 BN O NI 1 G32 | 1075120000 | C.35 |
| KDSW M32 BN O NI 2 G32 | 1075130000 | C.35 |
| KDSW M32 BN O SC 1 G32 | 1074570000 | C.34 |
| KDSW M32 BN O SC 2 G32 | 1074580000 | C.34 |
| KDSW M32 BS O NI 1 G32 | 1136490000 | C.37 |
| KDSW M32 BS O NI 2 G32 | 1136510000 | C.37 |
| KDSW M32 BS O SC 1 G32 | 1136240000 | C.36 |
| KDSW M32 BS O SC 2 G32 | 1136250000 | C.36 |
| KDSW M40 BN L NI 1 G40 | 1074870000 | C.39 |
| KDSW M40 BN L NI 2 G40 | 1074880000 | C.39 |
| KDSW M40 BN L SC 1 G40 | 1076360000 | C.38 |
| KDSW M40 BN L SC 2 G40 | 1076370000 | C.38 |
| KDSW M40 BN O NI 1 G40 | 1075140000 | C.35 |
| KDSW M40 BN O NI 2 G40 | 1075150000 | C.35 |
| KDSW M40 BN O SC 1 G40 | 1074590000 | C.34 |
| KDSW M40 BN O SC 2 G40 | 1074610000 | C.34 |
| KDSW M40 BS O NI 1 G40 | 1136520000 | C.37 |
| KDSW M40 BS O NI 2 G40 | 1136530000 | C.37 |
| KDSW M40 BS O SC 1 G40 | 1136260000 | C.36 |
| KDSW M40 BS O SC 2 G40 | 1136270000 | C.36 |
| KDSW M50 BN L NI 1 G50 | 1074920000 | C.39 |
| KDSW M50 BN L NI 1 G50S | 1074890000 | C.39 |
| KDSW M50 BN L NI 2 G50 | 1074930000 | C.39 |
| KDSW M50 BN L NI 2 G50S | 1074910000 | C.39 |
| KDSW M50 BN L SC 1 G50 | 1076400000 | C.38 |
| KDSW M50 BN L SC 1 G50S | 1076380000 | C.38 |
| KDSW M50 BN L SC 2 G50 | 1076410000 | C.38 |
| KDSW M50 BN L SC 2 G50S | 1076390000 | C.38 |
| KDSW M50 BN O NI 1 G50 | 1075180000 | C.35 |
| KDSW M50 BN O NI 1 G50S | 1075160000 | C.35 |
| KDSW M50 BN O NI 2 G50 | 1075190000 | C.35 |
| KDSW M50 BN O NI 2 G50S | 1075170000 | C.35 |
| KDSW M50 BN O SC 1 G50 | 1074640000 | C.34 |
| KDSW M50 BN O SC 1 G50S | 1074620000 | C.34 |
| KDSW M50 BN O SC 2 G50 | 1074650000 | C.34 |
| KDSW M50 BN O SC 2 G50S | 1074630000 | C.34 |
| KDSW M50 BS O NI 1 G50 | 1136560000 | C.37 |
| KDSW M50 BS O NI 1 G50S | 1136540000 | C.37 |
| KDSW M50 BS O NI 2 G50 | 1136570000 | C.37 |
| KDSW M50 BS O NI 2 G50S | 1136550000 | C.37 |
| KDSW M50 BS O SC 1 G50 | 1136310000 | C.36 |
| KDSW M50 BS O SC 1 G50S | 1136280000 | C.36 |
| KDSW M50 BS O SC 2 G50 | 1136320000 | C.36 |
| KDSW M50 BS O SC 2 G50S | 1136290000 | C.36 |
| KDSW M63 BN L NI 1 G63 | 1074960000 | C.39 |
| KDSW M63 BN L NI 1 G63S | 1074940000 | C.39 |
| KDSW M63 BN L NI 2 G63 | 1074970000 | C.39 |
| KDSW M63 BN L NI 2 G63S | 1074950000 | C.39 |
| KDSW M63 BN L SC 1 G63 | 1076440000 | C.38 |
| KDSW M63 BN L SC 1 G63S | 1076420000 | C.38 |
| KDSW M63 BN L SC 2 G63 | 1076450000 | C.38 |
| KDSW M63 BN L SC 2 G63S | 1076430000 | C.38 |
| KDSW M63 BN O NI 1 G63 | 1075230000 | C.35 |
| KDSW M63 BN O NI 1 G63S | 1075210000 | C.35 |
| KDSW M63 BN O NI 2 G63 | 1075240000 | C.35 |
| KDSW M63 BN O NI 2 G63S | 1075220000 | C.35 |
| KDSW M63 BN O SC 1 G63 | 1074730000 | C.34 |
| KDSW M63 BN O SC 1 G63S | 1074670000 | C.34 |
| KDSW M63 BN O SC 2 G63 | 1074750000 | C.34 |
| KDSW M63 BN O SC 2 G63S | 1074710000 | C.34 |
| KDSW M63 BS O NI 1 G63 | 1136600000 | C.37 |
| KDSW M63 BS O NI 1 G63S | 1136580000 | C.37 |
| KDSW M63 BS O NI 2 G63 | 1136610000 | C.37 |
| KDSW M63 BS O NI 2 G63S | 1136590000 | C.37 |
| KDSW M63 BS O SC 1 G63 | 1136350000 | C.36 |
| KDSW M63 BS O SC 1 G63S | 1136330000 | C.36 |
| KDSW M63 BS O SC 2 G63 | 1136360000 | C.36 |
| KDSW M63 BS O SC 2 G63S | 1136340000 | C.36 |
| KDSW M75 BN L NI 1 G75 | 1075010000 | C.39 |
| KDSW M75 BN L NI 1 G75S | 1074980000 | C.39 |
| KDSW M75 BN L NI 2 G75 | 1075020000 | C.39 |
| KDSW M75 BN L NI 2 G75S | 1074990000 | C.39 |
| KDSW M75 BN L SC 1 G75 | 1076480000 | C.38 |
| KDSW M75 BN L SC 1 G75S | 1076460000 | C.38 |
| KDSW M75 BN L SC 2 G75 | 1076490000 | C.38 |
| KDSW M75 BN L SC 2 G75S | 1076470000 | C.38 |
| KDSW M75 BN O NI 1 G75 | 1075270000 | C.35 |
| KDSW M75 BN O NI 1 G75S | 1075250000 | C.35 |
| KDSW M75 BN O NI 2 G75 | 1075280000 | C.35 |
| KDSW M75 BN O NI 2 G75S | 1075260000 | C.35 |
| KDSW M75 BN O SC 1 G75 | 1074820000 | C.34 |
| KDSW M75 BN O SC 1 G75S | 1074770000 | C.34 |
| KDSW M75 BN O SC 2 G75 | 1074840000 | C.34 |
| KDSW M75 BN O SC 2 G75S | 1074790000 | C.34 |
| KDSW M75 BS O NI 1 G75 | 1136640000 | C.37 |
| KDSW M75 BS O NI 1 G75S | 1136620000 | C.37 |
| KDSW M75 BS O NI 2 G75 | 1136650000 | C.37 |
| KDSW M75 BS O NI 2 G75S | 1136630000 | C.37 |
| KDSW M75 BS O SC 1 G75 | 1136390000 | C.36 |
| KDSW M75 BS O SC 1 G75S | 1136370000 | C.36 |
| KDSW M75 BS O SC 2 G75 | 1136400000 | C.36 |
| KDSW M75 BS O SC 2 G75S | 1136380000 | C.36 |
| KDSX M20 BS O NI 1 G16 | 1135910000 | C.41 |
| KDSX M20 BS O NI 1 G20 | 1135950000 | C.41 |
| KDSX M20 BS O NI 1 G20S | 1135930000 | C.41 |
| KDSX M20 BS O NI 2 G16 | 1135920000 | C.41 |
| KDSX M20 BS O NI 2 G20 | 1135960000 | C.41 |
| KDSX M20 BS O NI 2 G20S | 1135940000 | C.41 |
| KDSX M20 BS O SC 1 G16 | 1135650000 | C.40 |
| KDSX M20 BS O SC 1 G20 | 1135690000 | C.40 |
| KDSX M20 BS O SC 1 G20S | 1135670000 | C.40 |
| KDSX M20 BS O SC 2 G16 | 1135660000 | C.40 |
| KDSX M20 BS O SC 2 G20 | 1135710000 | C.40 |
| KDSX M20 BS O SC 2 G20S | 1135680000 | C.40 |
| KDSX M25 BS O NI 1 G25 | 1135970000 | C.41 |
| KDSX M25 BS O NI 2 G25 | 1135980000 | C.41 |
| KDSX M25 BS O SC 1 G25 | 1135720000 | C.40 |
| KDSX M25 BS O SC 2 G25 | 1135730000 | C.40 |
| KDSX M32 BS O NI 1 G32 | 1135990000 | C.41 |
| KDSX M32 BS O NI 2 G32 | 1136000000 | C.41 |
| KDSX M32 BS O SC 1 G32 | 1135740000 | C.40 |
| KDSX M32 BS O SC 2 G32 | 1135750000 | C.40 |
| KDSX M40 BS O NI 1 G40 | 1136010000 | C.41 |
| KDSX M40 BS O NI 2 G40 | 1136020000 | C.41 |
| KDSX M40 BS O SC 1 G40 | 1135760000 | C.40 |
| KDSX M40 BS O SC 2 G40 | 1135770000 | C.40 |
| KDSX M50 BS O NI 1 G50 | 1136050000 | C.41 |
| KDSX M50 BS O NI 1 G50S | 1136030000 | C.41 |
| KDSX M50 BS O NI 2 G50 | 1136060000 | C.41 |
| KDSX M50 BS O NI 2 G50S | 1136040000 | C.41 |
| KDSX M50 BS O SC 1 G50 | 1135800000 | C.40 |
| KDSX M50 BS O SC 1 G50S | 1135780000 | C.40 |
| KDSX M50 BS O SC 2 G50 | 1135810000 | C.40 |
| KDSX M50 BS O SC 2 G50S | 1135790000 | C.40 |
| KDSX M63 BS O NI 1 G63 | 1136090000 | C.41 |
| KDSX M63 BS O NI 1 G63S | 1136070000 | C.41 |
| KDSX M63 BS O NI 2 G63 | 1136110000 | C.41 |
| KDSX M63 BS O NI 2 G63S | 1136080000 | C.41 |
| KDSX M63 BS O SC 1 G63 | 1135840000 | C.40 |
| KDSX M63 BS O SC 1 G63S | 1135820000 | C.40 |
| KDSX M63 BS O SC 2 G63 | 1135850000 | C.40 |
| KDSX M63 BS O SC 2 G63S | 1135830000 | C.40 |
| KDSX M75 BS O NI 1 G75 | 1136140000 | C.41 |
| KDSX M75 BS O NI 1 G75S | 1136120000 | C.41 |
| KDSX M75 BS O NI 2 G75 | 1136150000 | C.41 |
| KDSX M75 BS O NI 2 G75S | 1136130000 | C.41 |
| KDSX M75 BS O SC 1 G75 | 1135880000 | C.40 |
| KDSX M75 BS O SC 1 G75S | 1135860000 | C.40 |
| KDSX M75 BS O SC 2 G75 | 1135890000 | C.40 |
| KDSX M75 BS O SC 2 G75S | 1135870000 | C.40 |
| KL SET 10A4 S | 8000004145 | B.184 |
| KL SET 10A4 S | 8000004145 | B.187 |
| KL SET 12W4 S | 8000003444 | B.150 |
| KL SET 13A4 S | 8000004134 | B.156 |
| KL SET 14Z2.5 S | 8000004133 | B.156 |
| KL SET 15Z4 S | 8000004141 | B.161 |
| KL SET 18A4 S | 8000004146 | B.184 |
| KL SET 18A4 S | 8000004146 | B.188 |
| KL SET 18W4 S | 8000004140 | B.161 |
| KL SET 21A4 S | 8000004137 | B.158 |
| KL SET 24Z2.5 S | 8000004136 | B.158 |
| KL SET 32W4 S | 8000004142 | B.150 |
| KL SET 38Z2.5 S | 8000004143 | B.162 |
| KL SET 38Z2.5 S | 8000004143 | B.184 |
| KL SET 38Z2.5 S | 8000004143 | B.190 |
| KL SET 4Z4 S | 8000004139 | B.159 |
| KL SET 5A4 S | 8000004131 | B.154 |
| KL SET 5W4 S | 8000004138 | B.159 |
| KL SET 5Z2.5 S | 8000004130 | B.154 |
| KL SET 6A4 S | 8000004144 | B.184 |
| KL SET 6A4 S | 8000004144 | B.186 |
| KL SET 9Z4 S | 8000003445 | B.150 |
| KL SET KLIPPON POK1 BK4 | 8000004365 | B.184 |
| KL SET KLIPPON POK1 BK4 | 8000004365 | B.186 |
| KL SET KLIPPON POK2 BK6 | 8000004366 | B.184 |
| KL SET KLIPPON POK2 BK6 | 8000004366 | B.187 |
| KL SET KLIPPON POK3BK12 | 8000004367 | B.184 |
| KL SET KLIPPON POK3BK12 | 8000004367 | B.188 |
| KLIPPON BDX M20 B | 1292540000 | C.73 |
| KLIPPON BDX M20 S | 1292530000 | C.73 |
| KLIPPON BDX M20X15 S | 1344630000 | C.73 |
| KLIPPON COPL 080806 | 1390910000 | B.166 |
| KLIPPON COPL 081106 | 1390920000 | B.167 |
| KLIPPON COPL 081606 | 1390930000 | B.168 |
| KLIPPON COPL 081906 | 1390940000 | B.169 |
| KLIPPON COPL 082306 | 1390950000 | B.170 |
| KLIPPON COPL 121209 | 1390970000 | B.171 |
| KLIPPON COPL 122209 | 1390980000 | B.172 |
| KLIPPON COPL 161609 | 1390990000 | B.173 |
| KLIPPON COPL 162609 | 1391000000 | B.174 |
| KLIPPON COPL 163609 | 1391010000 | B.175 |
| KLIPPON COPL 165609 | 1391020000 | B.176 |
| KLIPPON COPL 252512/16 | 1391030000 | B.177 |
| KLIPPON COPL 252512/16 | 1391030000 | B.181 |
| KLIPPON COPL 254012/16 | 1391040000 | B.178 |
| KLIPPON COPL 254012/16 | 1391040000 | B.182 |
| KLIPPON COPL 256012 | 1391050000 | B.179 |
| KLIPPON COPL 404012 | 1391070000 | B.180 |
| KLIPPON K MF KIT 16 | 9529080000 | B.142 |
| KLIPPON K MF KIT 25 | 9527590000 | B.141 |
| KLIPPON K0 | 0573200000 | B.130 |
| KLIPPON K0 RAL7001 | 9529090000 | B.130 |
| KLIPPON K0 VMQ RAL7001 | 1937920000 | B.130 |
| KLIPPON K01 | 1565240000 | B.131 |
| KLIPPON K01 | 1565240000 | B.150 |
| KLIPPON K01 1M16AB CSS | 8000004184 | B.152 |
| KLIPPON K01 RAL7001 | 9529100000 | B.131 |
| KLIPPON K01 VMQ RAL7001 | 1937850000 | B.131 |
| KLIPPON K02 | 1565250000 | B.132 |
| KLIPPON K02 RAL7001 | 9529110000 | B.132 |
| KLIPPON K02 VMQ RAL7001 | 1937840000 | B.132 |
| KLIPPON K1 | 0342000000 | B.133 |
| KLIPPON K1 1,5M16AB CSS | 8000004147 | B.153 |
| KLIPPON K1 1M20AB CSS | 8000004148 | B.153 |
| KLIPPON K1 EX | 9526840000 | B.133 |
| KLIPPON K1 M16BCSS EX | 8000004202 | B.153 |
| KLIPPON K1 M20BCSS EX | 8000004203 | B.153 |
| KLIPPON K1 RAL7001 | 9529120000 | B.133 |
| KLIPPON K1 VMQ RAL7001 | 1937630000 | B.133 |
| KLIPPON K11 | 0573300000 | B.134 |
| KLIPPON K11 2M16AB CSS | 8000004149 | B.154 |
| KLIPPON K11 2M20AB CSS | 8000004150 | B.154 |
| KLIPPON K11 EX | 9526850000 | B.134 |
| KLIPPON K11 M16ACSS EX | 8000004207 | B.154 |
| KLIPPON K11 M16ZCSS EX | 8000004204 | B.154 |
| KLIPPON K11 M20ACSS EX | 8000004209 | B.154 |
| KLIPPON K11 M20ZCSS EX | 8000004208 | B.154 |
| KLIPPON K11 RAL7001 | 9529130000 | B.134 |
| KLIPPON K11 VMQ RAL7001 | 1937910000 | B.134 |
| KLIPPON K2 | 0342100000 | B.135 |
| KLIPPON K2 2M20AB CSS | 8000004151 | B.155 |
| KLIPPON K2 EX | 9526860000 | B.135 |
| KLIPPON K2 M20BCSS EX | 8000004210 | B.155 |
| KLIPPON K2 RAL7001 | 9529140000 | B.135 |
| KLIPPON K2 VMQ RAL7001 | 1937930000 | B.135 |
| KLIPPON K21 | 0573400000 | B.136 |
| KLIPPON K21 3M16AB CSS | 8000004152 | B.156 |
| KLIPPON K21 EX | 9526870000 | B.136 |
| KLIPPON K21 M16ACSS EX | 8000004212 | B.156 |
| KLIPPON K21 M16ZCSS EX | 8000004211 | B.156 |
| KLIPPON K21 RAL7001 | 9529150000 | B.136 |
| KLIPPON K21 VMQ RAL7001 | 1937830000 | B.136 |
| KLIPPON K3 | 0342200000 | B.137 |
| KLIPPON K3 4M20AB CSS | 8000004153 | B.157 |
| KLIPPON K3 EX | 9526880000 | B.137 |
| KLIPPON K3 M20BCSS EX | 8000004213 | B.157 |
| KLIPPON K3 RAL7001 | 9529160000 | B.137 |

| Type | Order No. | Page |
|---|---|---|
| KLIPPON K3 VMQ RAL7001 | 1937900000 | B.137 |
| KLIPPON K31 | 0573500000 | B.138 |
| KLIPPON K31 4M20AB CSS | 8000004154 | B.158 |
| KLIPPON K31 EX | 9526890000 | B.138 |
| KLIPPON K31 M20ACSS EX | 8000004215 | B.158 |
| KLIPPON K31 M20ZCSS EX | 8000004214 | B.158 |
| KLIPPON K31 RAL7001 | 9529170000 | B.138 |
| KLIPPON K31 VMQ RAL7001 | 1937820000 | B.138 |
| KLIPPON K32 | 1565260000 | B.139 |
| KLIPPON K32 EX | 9526900000 | B.139 |
| KLIPPON K32 RAL7001 | 9529180000 | B.139 |
| KLIPPON K32 VMQ RAL7001 | 1937810000 | B.139 |
| KLIPPON K4 | 0342300000 | B.140 |
| KLIPPON K4 2M20AB CSS | 8000004155 | B.159 |
| KLIPPON K4 EX | 9526910000 | B.140 |
| KLIPPON K4 M20WCSS EX | 8000004216 | B.159 |
| KLIPPON K4 M20ZCSS EX | 8000004217 | B.159 |
| KLIPPON K4 RAL7001 | 9529190000 | B.140 |
| KLIPPON K4 VMQ RAL7001 | 1937890000 | B.140 |
| KLIPPON K41 | 1565270000 | B.141 |
| KLIPPON K41 | 1565270000 | B.150 |
| KLIPPON K41 2M25AB CSS | 8000003446 | B.160 |
| KLIPPON K41 3M20AB CSS | 8000003447 | B.160 |
| KLIPPON K41 EX | 9526920000 | B.141 |
| KLIPPON K41 M20WCSS EX | 8000003591 | B.160 |
| KLIPPON K41 M20ZCSS EX | 8000003592 | B.160 |
| KLIPPON K41 M25WCSS EX | 8000003589 | B.160 |
| KLIPPON K41 M25ZCSS EX | 8000003590 | B.160 |
| KLIPPON K41 RAL7001 | 9529200000 | B.141 |
| KLIPPON K41 VMQ RAL7001 | 1937800000 | B.141 |
| KLIPPON K5 | 0342400000 | B.142 |
| KLIPPON K5 4M20AB CSS | 8000004158 | B.161 |
| KLIPPON K5 4M20WCSS EX | 8000004218 | B.161 |
| KLIPPON K5 4M20ZCSS EX | 8000004219 | B.161 |
| KLIPPON K5 EX | 9526930000 | B.142 |
| KLIPPON K5 RAL7001 | 9529210000 | B.142 |
| KLIPPON K5 VMQ RAL7001 | 1937860000 | B.142 |
| KLIPPON K51 | 1565280000 | B.143 |
| KLIPPON K51 EX | 9526940000 | B.143 |
| KLIPPON K51 RAL7001 | 9529220000 | B.143 |
| KLIPPON K51 VMQ RAL7001 | 1937750000 | B.143 |
| KLIPPON K52 | 1565290000 | B.144 |
| KLIPPON K52 | 1565290000 | B.150 |
| KLIPPON K52 4M20AB CSS | 8000004159 | B.162 |
| KLIPPON K52 EX | 9526950000 | B.144 |
| KLIPPON K52 M20WCSS EX | 8000004220 | B.162 |
| KLIPPON K52 M20ZCSS EX | 8000004221 | B.162 |
| KLIPPON K52 RAL7001 | 9529230000 | B.144 |
| KLIPPON K52 VMQ RAL7001 | 1937740000 | B.144 |
| KLIPPON K6 | 0342500000 | B.145 |
| KLIPPON K6 EX | 9526960000 | B.145 |
| KLIPPON K6 RAL7001 | 9529240000 | B.145 |
| KLIPPON K6 VMQ RAL7001 | 1937870000 | B.145 |
| KLIPPON K61 | 0573600000 | B.146 |
| KLIPPON K61 EX | 9526970000 | B.146 |
| KLIPPON K61 RAL7001 | 9529250000 | B.146 |
| KLIPPON K61 VMQ RAL7001 | 1937730000 | B.146 |
| KLIPPON K7 | 0342600000 | B.147 |
| KLIPPON K7 EX | 9526980000 | B.147 |
| KLIPPON K7 RAL7001 | 9529260000 | B.147 |
| KLIPPON K7 VMQ RAL7001 | 1937880000 | B.147 |
| KLIPPON K71 | 0573700000 | B.148 |
| KLIPPON K71 EX | 9526990000 | B.148 |
| KLIPPON K71 RAL7001 | 9529270000 | B.148 |
| KLIPPON K71 VMQ RAL7001 | 1937720000 | B.148 |
| Klippon POK 1 | 1277200000 | B.166 |
| Klippon POK 1 Ex | 9510210000 | B.166 |
| Klippon POK 10 | 1565440000 | B.180 |
| Klippon POK 10 Ex | 9510310000 | B.180 |
| Klippon POK 11 | 9510530000 | B.181 |
| Klippon POK 11 Ex | 9510360000 | B.181 |
| Klippon POK 12 | 9510540000 | B.182 |
| Klippon POK 12 Ex | 9510370000 | B.182 |
| Klippon POK 2 | 1277300000 | B.167 |
| Klippon POK 2 Ex | 9510220000 | B.167 |
| Klippon POK 3 | 1277400000 | B.168 |
| Klippon POK 3 Ex | 9510320000 | B.168 |
| Klippon POK 31 Ex | 9510330000 | B.169 |
| Klippon POK 32 | 9510510000 | B.170 |
| Klippon POK 32 Ex | 9510340000 | B.170 |
| Klippon POK 4 | 1277500000 | B.171 |
| Klippon POK 4 Ex | 9510230000 | B.171 |
| Klippon POK 5 | 1277600000 | B.172 |
| Klippon POK 5 Ex | 9510240000 | B.172 |
| Klippon POK 51 | 1565410000 | B.173 |
| Klippon POK 51 | 1565410000 | B.184 |
| Klippon POK 51 Ex | 9510250000 | B.173 |
| Klippon POK 6 | 1277700000 | B.174 |
| Klippon POK 6 Ex | 9510260000 | B.174 |
| Klippon POK 7 | 1277800000 | B.175 |
| Klippon POK 7 Ex | 9510270000 | B.175 |
| Klippon POK 71 | 9510520000 | B.176 |
| Klippon POK 71 Ex | 9510350000 | B.176 |
| Klippon POK 8 | 1565420000 | B.177 |
| Klippon POK 8 Ex | 9510280000 | B.177 |
| Klippon POK 9 | 1565430000 | B.178 |
| Klippon POK 9 Ex | 9510290000 | B.178 |
| Klippon POK 91 | 9510470000 | B.179 |
| Klippon POK 91 Ex | 9510300000 | B.179 |

| Type | Order No. | Page |
|---|---|---|
| KLIPPON POK1 2M16AB CSS | 8000004160 | B.184 |
| KLIPPON POK1 2M16AB CSS | 8000004160 | B.186 |
| KLIPPON POK1 M16ACSS EX | 8000004223 | B.184 |
| KLIPPON POK1 M16ACSS EX | 8000004223 | B.186 |
| KLIPPON POK1 M16BCSS EX | 8000004222 | B.184 |
| KLIPPON POK1 M16BCSS EX | 8000004222 | B.186 |
| KLIPPON POK2 2M20AB CSS | 8000004161 | B.184 |
| KLIPPON POK2 2M20AB CSS | 8000004161 | B.187 |
| KLIPPON POK2 M20ACSS EX | 8000004225 | B.184 |
| KLIPPON POK2 M20ACSS EX | 8000004225 | B.187 |
| KLIPPON POK2 M20BCSS EX | 8000004224 | B.184 |
| KLIPPON POK2 M20BCSS EX | 8000004224 | B.187 |
| KLIPPON POK3 4M20AB CSS | 8000004162 | B.184 |
| KLIPPON POK3 4M20AB CSS | 8000004162 | B.188 |
| KLIPPON POK3 M20ACSS EX | 8000004228 | B.184 |
| KLIPPON POK3 M20ACSS EX | 8000004228 | B.188 |
| KLIPPON POK3 M20BCSS EX | 8000004226 | B.184 |
| KLIPPON POK3 M20BCSS EX | 8000004226 | B.188 |
| Klippon POK31 | 1565400000 | B.169 |
| KLIPPON POK4 3M20AB CSS | 8000003448 | B.184 |
| KLIPPON POK4 3M20AB CSS | 8000003448 | B.189 |
| KLIPPON POK4 M20WCSS EX | 8000003593 | B.184 |
| KLIPPON POK4 M20WCSS EX | 8000003593 | B.189 |
| KLIPPON POK4 M20ZCSS EX | 8000003594 | B.184 |
| KLIPPON POK4 M20ZCSS EX | 8000003594 | B.189 |
| KLIPPON POK51 4M20ABCSS | 8000004164 | B.184 |
| KLIPPON POK51 4M20ABCSS | 8000004164 | B.190 |
| KLIPPON POK51 M20WCSS E | 8000004229 | B.184 |
| KLIPPON POK51 M20WCSS E | 8000004229 | B.190 |
| KLIPPON POK51 M20ZCSS E | 8000004230 | B.184 |
| KLIPPON POK51 M20ZCSS E | 8000004230 | B.190 |
| KLIPPON STB 1 MS HT | 1024970000 | B.120 |
| KLIPPON STB 1 SS | 1002690000 | B.120 |
| KLIPPON STB 1 SS E | 1058810000 | B.120 |
| KLIPPON STB 1.1 MS HT | 1024980000 | B.121 |
| KLIPPON STB 1.1 SS | 1002750000 | B.121 |
| KLIPPON STB 1.1 SS E | 1058820000 | B.121 |
| KLIPPON STB 2 MS HT | 1024990000 | B.122 |
| KLIPPON STB 2 SS | 1002740000 | B.122 |
| KLIPPON STB 2 SS E | 1058830000 | B.122 |
| KLIPPON STB 2.1 MS HT | 1025010000 | B.123 |
| KLIPPON STB 2.1 SS | 1002730000 | B.123 |
| KLIPPON STB 2.1 SS E | 1058840000 | B.123 |
| KLIPPON STB 3 MS HT | 1025020000 | B.124 |
| KLIPPON STB 3 SS | 1002720000 | B.124 |
| KLIPPON STB 3 SS E | 1058850000 | B.124 |
| KLIPPON STB 4 MS HT | 1025030000 | B.125 |
| KLIPPON STB 4 SS | 1002710000 | B.125 |
| KLIPPON STB 4 SS E | 1058860000 | B.125 |
| KLIPPON STB 5 MS HT | 1025040000 | B.126 |
| KLIPPON STB 5 SS | 1002700000 | B.126 |
| KLIPPON STB 5 SS E | 1058880000 | B.126 |
| KLIPPON STB 6 MS HT | 1025050000 | B.127 |
| KLIPPON STB 6 SS | 1002760000 | B.127 |
| KLIPPON STB 6 SS E | 1058870000 | B.127 |
| KOBBS 19X55 | 9205040000 | E.4 |
| KOBBS 19X75 | 9204780000 | E.4 |
| KOBBS 9.5X50 | 9205030000 | E.4 |
| KOHS 19 | 9205010000 | E.4 |
| KOHS 9.5+19 | 9205000000 | E.4 |
| KOK-112X36 | 9204870000 | E.6 |
| KOK-46X46 | 9204810000 | E.6 |
| KOK-52X36 | 9204820000 | E.6 |
| KOK-65X36 | 9204830000 | E.6 |
| KOK-68X68 | 9204840000 | E.6 |
| KOK-86X36 | 9204850000 | E.6 |
| KOK-91X36 | 9204860000 | E.6 |
| KOPD 10.0 | 9205020000 | E.5 |
| KOS PG 13/M20 | 9204950000 | E.4 |
| KOS-M16 | 9204880000 | E.4 |
| KOS-M25 | 9204900000 | E.4 |
| KOS-M32 | 9204910000 | E.4 |
| KOS-M40 | 9204920000 | E.4 |
| KOS-PG11 | 9204940000 | E.4 |
| KOS-PG16 | 9204960000 | E.4 |
| KOS-PG21 | 9204970000 | E.4 |
| KOS-PG29 | 9204980000 | E.4 |
| KOS-PG36 | 9204990000 | E.4 |
| KOS-PG9 | 9204930000 | E.4 |
| KSG M20 BN O NI 2 G16 | 1911510000 | C.42 |
| KSG M20 BN O NI 2 G20 | 1911560000 | C.42 |
| KSG M20 BN O NI 2 G20S | 1911540000 | C.42 |
| KSG M20 BN O SC 2 G16 | 1909380000 | C.42 |
| KSG M20 BN O SC 2 G20 | 1909410000 | C.42 |
| KSG M20 BN O SC 2 G20S | 1909400000 | C.42 |
| KSG M20 BS O NI 2 G16 | 0930481222 | C.43 |
| KSG M20 BS O NI 2 G20 | 0930501222 | C.43 |
| KSG M20 BS O NI 2 G20S | 0930491224 | C.43 |
| KSG M20 BS O SC 2 G16 | 0930481212 | C.43 |
| KSG M20 BS O SC 2 G20 | 0930501212 | C.43 |
| KSG M20 BS O SC 2 G20S | 1136720000 | C.43 |
| KSG M25 BN O NI 2 G25 | 1911570000 | C.42 |
| KSG M25 BN O SC 2 G25 | 1909420000 | C.42 |
| KSG M25 BS O NI 2 G25 | 0930511222 | C.43 |
| KSG M25 BS O SC 2 G25 | 0930511212 | C.43 |
| KSG M32 BN O NI 2 G32 | 1911580000 | C.42 |
| KSG M32 BN O SC 2 G32 | 1909430000 | C.42 |
| KSG M32 BS O NI 2 G32 | 0930521222 | C.43 |
| KSG M32 BS O SC 2 G32 | 0930521212 | C.43 |

| Type | Order No. | Page |
|---|---|---|
| KSG M40 BN O NI 2 G40 | 1911590000 | C.42 |
| KSG M40 BN O SC 2 G40 | 1909440000 | C.42 |
| KSG M40 BS O NI 2 G40 | 0930531222 | C.43 |
| KSG M40 BS O SC 2 G40 | 0930531212 | C.43 |
| KSG M50 BN O NI 2 G50 | 1911610000 | C.42 |
| KSG M50 BN O NI 2 G50S | 1911600000 | C.42 |
| KSG M50 BN O SC 2 G50 | 1909460000 | C.42 |
| KSG M50 BN O SC 2 G50S | 1909450000 | C.42 |
| KSG M50 BS O NI 2 G50 | 1136670000 | C.43 |
| KSG M50 BS O NI 2 G50S | 1136660000 | C.43 |
| KSG M50 BS O SC 2 G50 | 0930551212 | C.43 |
| KSG M50 BS O SC 2 G50S | 1136730000 | C.43 |
| KSG M63 BN O NI 2 G63 | 1911630000 | C.42 |
| KSG M63 BN O NI 2 G63S | 1911620000 | C.42 |
| KSG M63 BN O SC 2 G63 | 1909480000 | C.42 |
| KSG M63 BN O SC 2 G63S | 1909470000 | C.42 |
| KSG M63 BS O NI 2 G63 | 1136690000 | C.43 |
| KSG M63 BS O NI 2 G63S | 1136680000 | C.43 |
| KSG M63 BS O SC 2 G63 | 1136750000 | C.43 |
| KSG M63 BS O SC 2 G63S | 1136740000 | C.43 |
| KSG M75 BN O NI 2 G75 | 1075360000 | C.42 |
| KSG M75 BN O NI 2 G75S | 1075350000 | C.42 |
| KSG M75 BN O SC 2 G75 | 1075340000 | C.42 |
| KSG M75 BN O SC 2 G75S | 1075330000 | C.42 |
| KSG M75 BS O NI 2 G75 | 1136710000 | C.43 |
| KSG M75 BS O NI 2 G75S | 1136700000 | C.43 |
| KSG M75 BS O SC 2 G75 | 1136770000 | C.43 |
| KSG M75 BS O SC 2 G75S | 1136760000 | C.43 |
| KSP EL30 | 1736670000 | C.57 |
| KSP EL38 | 1736680000 | C.57 |
| KSP EL46 | 1076750000 | C.57 |
| KSP EL55 | 1076760000 | C.57 |
| KSP EL65 | 1076770000 | C.57 |
| KSP EL80 | 1076780000 | C.57 |
| KSP EL90 | 1076790000 | C.57 |
| KSP L 104 S | 1193940000 | C.58 |
| KSP L114 S | 1192790000 | C.58 |
| KSP L24 | 1736570000 | C.57 |
| KSP L24 S | 0930700001 | C.58 |
| KSP L30 | 1736580000 | C.57 |
| KSP L30 S | 0930700002 | C.58 |
| KSP L38 | 1736590000 | C.57 |
| KSP L38 S | 0930700003 | C.58 |
| KSP L46 | 1736600000 | C.57 |
| KSP L46 S | 0930700004 | C.58 |
| KSP L55 | 1736610000 | C.57 |
| KSP L55 S | 0930700005 | C.58 |
| KSP L65 | 1736620000 | C.57 |
| KSP L65 S | 0930700006 | C.58 |
| KSP L80 | 1736630000 | C.57 |
| KSP L80 S | 0930700007 | C.58 |
| KSP L90 | 1736640000 | C.57 |
| KSP L90 S | 0930700008 | C.58 |
| KSPA M16 BNI | 0887490000 | C.64 |
| KSPA M20 BNI | 0886670000 | C.64 |
| KSPA M25 BNI | 0886680000 | C.64 |
| KSPA M32 BNI | 0886690000 | C.64 |
| KSPA M40 BNI | 0886700000 | C.64 |
| KSPA M50 BNI | 0886710000 | C.64 |
| KSPA M63 BNI | 1075370000 | C.64 |
| KSPA M75 BNI | 1075380000 | C.64 |
| KSPM M16 BSC | 0887480000 | C.65 |
| KSPM M16 PL | 1209890000 | C.66 |
| KSPM M16 SSC | 0887500000 | C.65 |
| KSPM M20 BSC | 0885410000 | C.65 |
| KSPM M20 PL | 1209910000 | C.66 |
| KSPM M20 SSC | 0886720000 | C.65 |
| KSPM M25 BSC | 0885420000 | C.65 |
| KSPM M25 PL | 1209920000 | C.66 |
| KSPM M25 SSC | 0886730000 | C.65 |
| KSPM M32 BSC | 0885430000 | C.65 |
| KSPM M32 PL | 1209930000 | C.66 |
| KSPM M32 SSC | 0886740000 | C.65 |
| KSPM M40 BSC | 0885440000 | C.65 |
| KSPM M40 PL | 1209940000 | C.66 |
| KSPM M40 SSC | 0886750000 | C.65 |
| KSPM M50 BSC | 0885450000 | C.65 |
| KSPM M50 PL | 1209950000 | C.66 |
| KSPM M50 SSC | 1075510000 | C.65 |
| KSPM M63 BSC | 1075480000 | C.65 |
| KSPM M63 SSC | 1075520000 | C.65 |
| KSPM M75 BSC | 1075490000 | C.65 |
| KSPM M75 SSC | 1075530000 | C.65 |
| KSWF M16 | 1076680000 | C.54 |
| KSWF M20 | 0899750000 | C.54 |
| KSWF M25 | 0899770000 | C.54 |
| KSWF M32 | 1076690000 | C.54 |
| KSWF M40 | 1076710000 | C.54 |
| KSWF M50 | 1076720000 | C.54 |
| KSWF M63 | 1076730000 | C.54 |
| KSWF M75 | 1076740000 | C.54 |
| KSWF M90 | 1192820000 | C.54 |
| KSWN M16 | 1076630000 | C.53 |
| KSWN M20 | 0930730002 | C.53 |
| KSWN M25 | 1076640000 | C.53 |
| KSWN M32 | 1076650000 | C.53 |
| KSWN M40 | 0899780000 | C.53 |
| KSWN M50 | 0900660000 | C.53 |
| KSWN M63 | 1076660000 | C.53 |

| Type | Order No. | Page |
|---|---|---|
| KSWN M75 | 1076670000 | C.53 |
| KTB FS 221513 S4E1 | 1195660000 | B.67 |
| KTB FS 221513 S4E2 | 1195670000 | B.67 |
| KTB FS 221513 S4E3 | 1195680000 | B.67 |
| KTB FS 221513 S4E4 | 1195690000 | B.67 |
| KTB FS 262615 S4E1 | 1195710000 | B.68 |
| KTB FS 262615 S4E2 | 1195720000 | B.68 |
| KTB FS 262615 S4E3 | 1195730000 | B.68 |
| KTB FS 262615 S4E4 | 1195740000 | B.68 |
| KTB FS 262620 S4E1 | 1195760000 | B.69 |
| KTB FS 262620 S4E2 | 1195770000 | B.69 |
| KTB FS 262620 S4E3 | 1195780000 | B.69 |
| KTB FS 262620 S4E4 | 1195790000 | B.69 |
| KTB FS 303015 S4E1 | 1195810000 | B.70 |
| KTB FS 303015 S4E2 | 1195820000 | B.70 |
| KTB FS 303015 S4E3 | 1195830000 | B.70 |
| KTB FS 303015 S4E4 | 1195840000 | B.70 |
| KTB FS 303020 S4E1 | 1195860000 | B.71 |
| KTB FS 303020 S4E2 | 1195870000 | B.71 |
| KTB FS 303020 S4E3 | 1195880000 | B.71 |
| KTB FS 303020 S4E4 | 1195890000 | B.71 |
| KTB FS 352615 S4E1 | 1195910000 | B.72 |
| KTB FS 352615 S4E2 | 1195920000 | B.72 |
| KTB FS 352615 S4E3 | 1195930000 | B.72 |
| KTB FS 352615 S4E4 | 1195940000 | B.72 |
| KTB FS 352620 S4E1 | 1195960000 | B.73 |
| KTB FS 352620 S4E2 | 1195970000 | B.73 |
| KTB FS 352620 S4E3 | 1195980000 | B.73 |
| KTB FS 352620 S4E4 | 1195990000 | B.73 |
| KTB FS 403015 S4E1 | 1196010000 | B.74 |
| KTB FS 403015 S4E2 | 1196020000 | B.74 |
| KTB FS 403015 S4E3 | 1196030000 | B.74 |
| KTB FS 403015 S4E4 | 1196040000 | B.74 |
| KTB FS 403020 S4E1 | 1196060000 | B.75 |
| KTB FS 403020 S4E2 | 1196070000 | B.75 |
| KTB FS 403020 S4E3 | 1196080000 | B.75 |
| KTB FS 403020 S4E4 | 1196090000 | B.75 |
| KTB FS 453815 S4E1 | 1196110000 | B.76 |
| KTB FS 453815 S4E2 | 1196120000 | B.76 |
| KTB FS 453815 S4E3 | 1196130000 | B.76 |
| KTB FS 453815 S4E4 | 1196140000 | B.76 |
| KTB FS 453820 S4E1 | 1196160000 | B.77 |
| KTB FS 453820 S4E2 | 1196170000 | B.77 |
| KTB FS 453820 S4E3 | 1196180000 | B.77 |
| KTB FS 453820 S4E4 | 1196190000 | B.77 |
| KTB FS 484815 S4E1 | 1196210000 | B.78 |
| KTB FS 484815 S4E2 | 1196220000 | B.78 |
| KTB FS 484815 S4E3 | 1196230000 | B.78 |
| KTB FS 484815 S4E4 | 1196240000 | B.78 |
| KTB FS 484820 S4E1 | 1196260000 | B.79 |
| KTB FS 484820 S4E2 | 1196270000 | B.79 |
| KTB FS 484820 S4E3 | 1196280000 | B.79 |
| KTB FS 484820 S4E4 | 1196290000 | B.79 |
| KTB FS 553515 S4E1 | 1196310000 | B.80 |
| KTB FS 553515 S4E2 | 1196320000 | B.80 |
| KTB FS 553515 S4E3 | 1196330000 | B.80 |
| KTB FS 553515 S4E4 | 1196340000 | B.80 |
| KTB FS 553520 S4E1 | 1196360000 | B.81 |
| KTB FS 553520 S4E2 | 1196370000 | B.81 |
| KTB FS 553520 S4E3 | 1196380000 | B.81 |
| KTB FS 553520 S4E4 | 1196390000 | B.81 |
| KTB FS 624515 S4E1 | 1196410000 | B.82 |
| KTB FS 624515 S4E2 | 1196420000 | B.82 |
| KTB FS 624515 S4E3 | 1196430000 | B.82 |
| KTB FS 624515 S4E4 | 1196440000 | B.82 |
| KTB FS 624520 S4E1 | 1196460000 | B.83 |
| KTB FS 624520 S4E2 | 1196470000 | B.83 |
| KTB FS 624520 S4E3 | 1196480000 | B.83 |
| KTB FS 624520 S4E4 | 1196490000 | B.83 |
| KTB FS 765015 S4E1 | 1196510000 | B.84 |
| KTB FS 765015 S4E2 | 1196520000 | B.84 |
| KTB FS 765015 S4E3 | 1196530000 | B.84 |
| KTB FS 765015 S4E4 | 1196540000 | B.84 |
| KTB FS 765020 S4E1 | 1196560000 | B.85 |
| KTB FS 765020 S4E2 | 1196570000 | B.85 |
| KTB FS 765020 S4E3 | 1196580000 | B.85 |
| KTB FS 765020 S4E4 | 1196590000 | B.85 |
| KTB FS 916115 S4E1 | 1196610000 | B.86 |
| KTB FS 916115 S4E2 | 1196620000 | B.86 |
| KTB FS 916115 S4E3 | 1196630000 | B.86 |
| KTB FS 916115 S4E4 | 1196640000 | B.86 |
| KTB FS 916120 S4E1 | 1196660000 | B.87 |
| KTB FS 916120 S4E2 | 1196670000 | B.87 |
| KTB FS 916120 S4E3 | 1196680000 | B.87 |
| KTB FS 916120 S4E4 | 1196690000 | B.87 |
| KTB FS 987420 S4E1 | 1196710000 | B.88 |
| KTB FS 987420 S4E2 | 1196720000 | B.88 |
| KTB FS 987420 S4E3 | 1196730000 | B.88 |
| KTB FS 987420 S4E4 | 1196740000 | B.88 |
| KTB GP 221513 AB S4 6MM | 1256270000 | B.15 |
| KTB GP 221513 CD S4 6MM | 1256280000 | B.15 |
| KTB GP 262615 AB S4 6MM | 1256290000 | B.16 |
| KTB GP 262615 CD S4 6MM | 1256310000 | B.16 |
| KTB GP 262620 AB S4 6MM | 1256320000 | B.17 |
| KTB GP 262620 CD S4 6MM | 1256330000 | B.17 |
| KTB GP 303015 AB S4 6MM | 1256340000 | B.18 |
| KTB GP 303015 CD S4 6MM | 1256350000 | B.18 |
| KTB GP 303020 AB S4 6MM | 1256360000 | B.19 |
| KTB GP 303020 CD S4 6MM | 1256370000 | B.19 |

| Type | Order No. | Page |
|---|---|---|
| KTB GP 352615 AB S4 6MM | 1256380000 | B.20 |
| KTB GP 352615 CD S4 6MM | 1256390000 | B.20 |
| KTB GP 352620 AB S4 6MM | 1256410000 | B.21 |
| KTB GP 352620 CD S4 6MM | 1256420000 | B.21 |
| KTB GP 403015 AB S4 6MM | 1256430000 | B.22 |
| KTB GP 403015 CD S4 6MM | 1256440000 | B.22 |
| KTB GP 403020 AB S4 6MM | 1256450000 | B.23 |
| KTB GP 403020 CD S4 6MM | 1256470000 | B.23 |
| KTB GP 453815 AB S4 6MM | 1256480000 | B.24 |
| KTB GP 453815 CD S4 6MM | 1256490000 | B.24 |
| KTB GP 453820 AB S4 6MM | 1256510000 | B.25 |
| KTB GP 453820 CD S4 6MM | 1256520000 | B.25 |
| KTB GP 484815 AB S4 6MM | 1256530000 | B.26 |
| KTB GP 484815 CD S4 6MM | 1256540000 | B.26 |
| KTB GP 484820 AB S4 6MM | 1256550000 | B.27 |
| KTB GP 484820 CD S4 6MM | 1256560000 | B.27 |
| KTB GP 553515 AB S4 6MM | 1256570000 | B.28 |
| KTB GP 553515 CD S4 6MM | 1256580000 | B.28 |
| KTB GP 553520 AB S4 6MM | 1256590000 | B.29 |
| KTB GP 553520 CD S4 6MM | 1256610000 | B.29 |
| KTB GP 624515 AB S4 6MM | 1256620000 | B.30 |
| KTB GP 624515 CD S4 6MM | 1256630000 | B.30 |
| KTB GP 624520 AB S4 6MM | 1256640000 | B.31 |
| KTB GP 624520 CD S4 6MM | 1256650000 | B.31 |
| KTB GP 765015 AB S4 6MM | 1256660000 | B.32 |
| KTB GP 765015 CD S4 6MM | 1256670000 | B.32 |
| KTB GP 765020 AB S4 6MM | 1256680000 | B.33 |
| KTB GP 765020 CD S4 6MM | 1256690000 | B.33 |
| KTB GP 916115 AB S4 6MM | 1256710000 | B.34 |
| KTB GP 916115 CD S4 6MM | 1256720000 | B.34 |
| KTB GP 916120 AB S4 6MM | 1256730000 | B.35 |
| KTB GP 916120 CD S4 6MM | 1256740000 | B.35 |
| KTB GP 987420 AB S4 6MM | 1256750000 | B.36 |
| KTB GP 987420 CD S4 6MM | 1256760000 | B.36 |
| KTB MH 221513 S4E1 | 1194560000 | B.15 |
| KTB MH 221513 S4E2 | 1194570000 | B.15 |
| KTB MH 221513 S4E3 | 1194580000 | B.15 |
| KTB MH 221513 S4E4 | 1194590000 | B.15 |
| KTB MH 262615 S4E1 | 1194610000 | B.16 |
| KTB MH 262615 S4E2 | 1194620000 | B.16 |
| KTB MH 262615 S4E3 | 1194630000 | B.16 |
| KTB MH 262615 S4E4 | 1194640000 | B.16 |
| KTB MH 262620 S4E1 | 1194660000 | B.17 |
| KTB MH 262620 S4E2 | 1194670000 | B.17 |
| KTB MH 262620 S4E3 | 1194680000 | B.17 |
| KTB MH 262620 S4E4 | 1194690000 | B.17 |
| KTB MH 303015 S4E1 | 1194710000 | B.18 |
| KTB MH 303015 S4E2 | 1194720000 | B.18 |
| KTB MH 303015 S4E3 | 1194730000 | B.18 |
| KTB MH 303015 S4E4 | 1194740000 | B.18 |
| KTB MH 303020 S4E1 | 1194760000 | B.19 |
| KTB MH 303020 S4E2 | 1194770000 | B.19 |
| KTB MH 303020 S4E3 | 1194780000 | B.19 |
| KTB MH 303020 S4E4 | 1194790000 | B.19 |
| KTB MH 352615 S4E1 | 1194810000 | B.20 |
| KTB MH 352615 S4E2 | 1194820000 | B.20 |
| KTB MH 352615 S4E3 | 1194830000 | B.20 |
| KTB MH 352615 S4E4 | 1194840000 | B.20 |
| KTB MH 352620 S4E1 | 1194860000 | B.21 |
| KTB MH 352620 S4E2 | 1194870000 | B.21 |
| KTB MH 352620 S4E3 | 1194880000 | B.21 |
| KTB MH 352620 S4E4 | 1194890000 | B.21 |
| KTB MH 403015 S4E1 | 1194910000 | B.22 |
| KTB MH 403015 S4E2 | 1194920000 | B.22 |
| KTB MH 403015 S4E3 | 1194930000 | B.22 |
| KTB MH 403015 S4E4 | 1194940000 | B.22 |
| KTB MH 403020 S4E1 | 1194960000 | B.23 |
| KTB MH 403020 S4E2 | 1194970000 | B.23 |
| KTB MH 403020 S4E3 | 1194980000 | B.23 |
| KTB MH 403020 S4E4 | 1194990000 | B.23 |
| KTB MH 453815 S4E1 | 1195010000 | B.24 |
| KTB MH 453815 S4E2 | 1195020000 | B.24 |
| KTB MH 453815 S4E3 | 1195030000 | B.24 |
| KTB MH 453815 S4E4 | 1195040000 | B.24 |
| KTB MH 453820 S4E1 | 1195060000 | B.25 |
| KTB MH 453820 S4E2 | 1195070000 | B.25 |
| KTB MH 453820 S4E3 | 1195080000 | B.25 |
| KTB MH 453820 S4E4 | 1195090000 | B.25 |
| KTB MH 484815 S4E1 | 1195110000 | B.26 |
| KTB MH 484815 S4E2 | 1195120000 | B.26 |
| KTB MH 484815 S4E3 | 1195130000 | B.26 |
| KTB MH 484815 S4E4 | 1195140000 | B.26 |
| KTB MH 484820 S4E1 | 1195160000 | B.27 |
| KTB MH 484820 S4E2 | 1195170000 | B.27 |
| KTB MH 484820 S4E3 | 1195180000 | B.27 |
| KTB MH 484820 S4E4 | 1195190000 | B.27 |
| KTB MH 553515 S4E1 | 1195210000 | B.28 |
| KTB MH 553515 S4E2 | 1195220000 | B.28 |
| KTB MH 553515 S4E3 | 1195230000 | B.28 |
| KTB MH 553515 S4E4 | 1195240000 | B.28 |
| KTB MH 553520 S4E1 | 1195260000 | B.29 |
| KTB MH 553520 S4E2 | 1195270000 | B.29 |
| KTB MH 553520 S4E3 | 1195280000 | B.29 |
| KTB MH 553520 S4E4 | 1195290000 | B.29 |
| KTB MH 624515 S4E1 | 1195310000 | B.30 |
| KTB MH 624515 S4E2 | 1195320000 | B.30 |
| KTB MH 624515 S4E3 | 1195330000 | B.30 |
| KTB MH 624515 S4E4 | 1195340000 | B.30 |
| KTB MH 624520 S4E1 | 1195360000 | B.31 |
| KTB MH 624520 S4E2 | 1195370000 | B.31 |
| KTB MH 624520 S4E3 | 1195380000 | B.31 |
| KTB MH 624520 S4E4 | 1195390000 | B.31 |
| KTB MH 765015 S4E1 | 1195410000 | B.32 |
| KTB MH 765015 S4E2 | 1195420000 | B.32 |
| KTB MH 765015 S4E3 | 1195430000 | B.32 |
| KTB MH 765015 S4E4 | 1195440000 | B.32 |
| KTB MH 765020 S4E1 | 1195460000 | B.33 |
| KTB MH 765020 S4E2 | 1195470000 | B.33 |
| KTB MH 765020 S4E3 | 1195480000 | B.33 |
| KTB MH 765020 S4E4 | 1195490000 | B.33 |
| KTB MH 916115 S4E1 | 1195510000 | B.34 |
| KTB MH 916115 S4E2 | 1195520000 | B.34 |
| KTB MH 916115 S4E3 | 1195530000 | B.34 |
| KTB MH 916115 S4E4 | 1195540000 | B.34 |
| KTB MH 916120 S4E1 | 1195560000 | B.35 |
| KTB MH 916120 S4E2 | 1195570000 | B.35 |
| KTB MH 916120 S4E3 | 1195580000 | B.35 |
| KTB MH 916120 S4E4 | 1195590000 | B.35 |
| KTB MH 987420 S4E1 | 1195610000 | B.36 |
| KTB MH 987420 S4E2 | 1195620000 | B.36 |
| KTB MH 987420 S4E3 | 1195630000 | B.36 |
| KTB MH 987420 S4E4 | 1195640000 | B.36 |
| KTB MOPL 2215 MSZN | 1193930000 | B.15 |
| KTB MOPL 2215 S2N | 1193810000 | B.15 |
| KTB MOPL 2215 S2N H | 1257650000 | B.15 |
| KTB MOPL 2626 MSZN | 1193950000 | B.16 |
| KTB MOPL 2626 S2N | 1193820000 | B.16 |
| KTB MOPL 2626 S2N H | 1257660000 | B.16 |
| KTB MOPL 3030 MSZN | 1193960000 | B.18 |
| KTB MOPL 3030 S2N | 1193830000 | B.18 |
| KTB MOPL 3030 S2N H | 1257670000 | B.18 |
| KTB MOPL 3526 MSZN | 1193970000 | B.20 |
| KTB MOPL 3526 S2N | 1193840000 | B.20 |
| KTB MOPL 3526 S2N H | 1257680000 | B.20 |
| KTB MOPL 4030 MSZN | 1193980000 | B.22 |
| KTB MOPL 4030 S2N | 1193850000 | B.22 |
| KTB MOPL 4030 S2N H | 1257690000 | B.22 |
| KTB MOPL 4538 MSZN | 1193990000 | B.24 |
| KTB MOPL 4538 S2N | 1193860000 | B.24 |
| KTB MOPL 4538 S2N H | 1257700000 | B.24 |
| KTB MOPL 4848 MSZN | 1194000000 | B.26 |
| KTB MOPL 4848 S2N | 1193870000 | B.26 |
| KTB MOPL 4848 S2N H | 1257710000 | B.26 |
| KTB MOPL 5535 MSZN | 1194010000 | B.28 |
| KTB MOPL 5535 S2N | 1193880000 | B.28 |
| KTB MOPL 5535 S2N H | 1257720000 | B.28 |
| KTB MOPL 6245 MSZN | 1194020000 | B.30 |
| KTB MOPL 6245 S2N | 1193890000 | B.30 |
| KTB MOPL 6245 S2N H | 1257740000 | B.30 |
| KTB MOPL 7650 MSZN | 1194030000 | B.32 |
| KTB MOPL 7650 S2N | 1193900000 | B.32 |
| KTB MOPL 7650 S2N H | 1257750000 | B.32 |
| KTB MOPL 9161 MSZN | 1194040000 | B.34 |
| KTB MOPL 9161 S2N | 1193910000 | B.34 |
| KTB MOPL 9161 S2N H | 1257760000 | B.34 |
| KTB MOPL 9874 MSZN | 1194050000 | B.36 |
| KTB MOPL 9874 S2N | 1193920000 | B.36 |
| KTB MOPL 9874 S2N H | 1257770000 | B.36 |
| KTB QL 221513 S4E1 | 1199860000 | B.41 |
| KTB QL 221513 S4E2 | 1199870000 | B.41 |
| KTB QL 221513 S4E3 | 1199880000 | B.41 |
| KTB QL 221513 S4E4 | 1199890000 | B.41 |
| KTB QL 262615 S4E1 | 1199910000 | B.42 |
| KTB QL 262615 S4E2 | 1199920000 | B.42 |
| KTB QL 262615 S4E3 | 1199930000 | B.42 |
| KTB QL 262615 S4E4 | 1199940000 | B.42 |
| KTB QL 262620 S4E1 | 1199960000 | B.43 |
| KTB QL 262620 S4E2 | 1199970000 | B.43 |
| KTB QL 262620 S4E3 | 1199980000 | B.43 |
| KTB QL 262620 S4E4 | 1199990000 | B.43 |
| KTB QL 303015 S4E1 | 1200020000 | B.44 |
| KTB QL 303015 S4E2 | 1200030000 | B.44 |
| KTB QL 303015 S4E3 | 1200040000 | B.44 |
| KTB QL 303015 S4E4 | 1200050000 | B.44 |
| KTB QL 303020 S4E1 | 1200070000 | B.45 |
| KTB QL 303020 S4E2 | 1200080000 | B.45 |
| KTB QL 303020 S4E3 | 1200090000 | B.45 |
| KTB QL 303020 S4E4 | 1200100000 | B.45 |
| KTB QL 352615 S4E1 | 1200120000 | B.46 |
| KTB QL 352615 S4E2 | 1200130000 | B.46 |
| KTB QL 352615 S4E3 | 1200140000 | B.46 |
| KTB QL 352615 S4E4 | 1200150000 | B.46 |
| KTB QL 352620 S4E1 | 1200170000 | B.47 |
| KTB QL 352620 S4E2 | 1200180000 | B.47 |
| KTB QL 352620 S4E3 | 1200190000 | B.47 |
| KTB QL 352620 S4E4 | 1200210000 | B.47 |
| KTB QL 403015 S4E1 | 1200230000 | B.48 |
| KTB QL 403015 S4E2 | 1200240000 | B.48 |
| KTB QL 403015 S4E3 | 1200250000 | B.48 |
| KTB QL 403015 S4E4 | 1200260000 | B.48 |
| KTB QL 403020 S4E1 | 1200280000 | B.49 |
| KTB QL 403020 S4E2 | 1200290000 | B.49 |
| KTB QL 403020 S4E3 | 1200310000 | B.49 |
| KTB QL 403020 S4E4 | 1200320000 | B.49 |
| KTB QL 453815 S4E1 | 1200340000 | B.50 |
| KTB QL 453815 S4E2 | 1200350000 | B.50 |
| KTB QL 453815 S4E3 | 1200360000 | B.50 |
| KTB QL 453815 S4E4 | 1200370000 | B.50 |
| KTB QL 453820 S4E1 | 1200390000 | B.51 |
| KTB QL 453820 S4E2 | 1200410000 | B.51 |
| KTB QL 453820 S4E3 | 1200420000 | B.51 |
| KTB QL 453820 S4E4 | 1200430000 | B.51 |
| KTB QL 484815 S4E1 | 1200450000 | B.52 |
| KTB QL 484815 S4E2 | 1200460000 | B.52 |
| KTB QL 484815 S4E3 | 1200470000 | B.52 |
| KTB QL 484815 S4E4 | 1200480000 | B.52 |
| KTB QL 484820 S4E1 | 1200510000 | B.53 |
| KTB QL 484820 S4E2 | 1200520000 | B.53 |
| KTB QL 484820 S4E3 | 1200530000 | B.53 |
| KTB QL 484820 S4E4 | 1200540000 | B.53 |
| KTB QL 553515 S4E1 | 1200560000 | B.54 |
| KTB QL 553515 S4E2 | 1200570000 | B.54 |
| KTB QL 553515 S4E3 | 1200580000 | B.54 |
| KTB QL 553515 S4E4 | 1200590000 | B.54 |
| KTB QL 553520 S4E1 | 1200620000 | B.55 |
| KTB QL 553520 S4E2 | 1200630000 | B.55 |
| KTB QL 553520 S4E3 | 1200640000 | B.55 |
| KTB QL 553520 S4E4 | 1200650000 | B.55 |
| KTB QL 624515 S4E1 | 1200670000 | B.56 |
| KTB QL 624515 S4E2 | 1200680000 | B.56 |
| KTB QL 624515 S4E3 | 1200690000 | B.56 |
| KTB QL 624515 S4E4 | 1200710000 | B.56 |
| KTB QL 624520 S4E1 | 1200730000 | B.57 |
| KTB QL 624520 S4E2 | 1200740000 | B.57 |
| KTB QL 624520 S4E3 | 1200750000 | B.57 |
| KTB QL 624520 S4E4 | 1200760000 | B.57 |
| KTB QL 765015 S4E1 | 1200780000 | B.58 |
| KTB QL 765015 S4E2 | 1200790000 | B.58 |
| KTB QL 765015 S4E3 | 1200810000 | B.58 |
| KTB QL 765015 S4E4 | 1200820000 | B.58 |
| KTB QL 765020 S4E1 | 1200840000 | B.59 |
| KTB QL 765020 S4E2 | 1200850000 | B.59 |
| KTB QL 765020 S4E3 | 1200860000 | B.59 |
| KTB QL 765020 S4E4 | 1200870000 | B.59 |
| KTB QL 916115 S4E1 | 1200890000 | B.60 |
| KTB QL 916115 S4E2 | 1200910000 | B.60 |
| KTB QL 916115 S4E3 | 1200920000 | B.60 |
| KTB QL 916115 S4E4 | 1200930000 | B.60 |
| KTB QL 916120 S4E1 | 1200950000 | B.61 |
| KTB QL 916120 S4E2 | 1200960000 | B.61 |
| KTB QL 916120 S4E3 | 1200970000 | B.61 |
| KTB QL 916120 S4E4 | 1200980000 | B.61 |
| KTB QL 987420 S4E1 | 1201010000 | B.62 |
| KTB QL 987420 S4E2 | 1201020000 | B.62 |
| KTB QL 987420 S4E3 | 1201030000 | B.62 |
| KTB QL 987420 S4E4 | 1201040000 | B.62 |
| KTB QLL S2 DB3 | 1191590000 | B.93 |
| KTB QLL S2 SLS | 1191600000 | B.93 |
| KTB RNHD 221513 R | 1281360000 | B.15 |
| KTB RNHD 221513 R | 1281360000 | B.41 |
| KTB RNHD 262615 R | 1281370000 | B.16 |
| KTB RNHD 262615 R | 1281370000 | B.42 |
| KTB RNHD 262620 R | 1281380000 | B.17 |
| KTB RNHD 262620 R | 1281380000 | B.43 |
| KTB RNHD 303015 R | 1281390000 | B.18 |
| KTB RNHD 303015 R | 1281390000 | B.44 |
| KTB RNHD 303020 R | 1281400000 | B.19 |
| KTB RNHD 303020 R | 1281400000 | B.45 |
| KTB RNHD 352615 R | 1281410000 | B.20 |
| KTB RNHD 352615 R | 1281410000 | B.46 |
| KTB RNHD 352620 R | 1281420000 | B.21 |
| KTB RNHD 352620 R | 1281420000 | B.47 |
| KTB RNHD 403015 R | 1281430000 | B.22 |
| KTB RNHD 403015 R | 1281430000 | B.48 |
| KTB RNHD 403020 R | 1281440000 | B.23 |
| KTB RNHD 403020 R | 1281440000 | B.49 |
| KTB RNHD 453815 R | 1281450000 | B.24 |
| KTB RNHD 453815 R | 1281450000 | B.50 |
| KTB RNHD 453820 R | 1281460000 | B.25 |
| KTB RNHD 453820 R | 1281460000 | B.51 |
| KTB RNHD 484815 R | 1281470000 | B.26 |
| KTB RNHD 484815 R | 1281470000 | B.52 |
| KTB RNHD 484820 R | 1281480000 | B.27 |
| KTB RNHD 484820 R | 1281480000 | B.53 |
| KTB RNHD 553515 R | 1281490000 | B.28 |
| KTB RNHD 553515 R | 1281490000 | B.54 |
| KTB RNHD 553520 R | 1281500000 | B.29 |
| KTB RNHD 553520 R | 1281500000 | B.55 |
| KTB RNHD 624515 R | 1281510000 | B.30 |
| KTB RNHD 624515 R | 1281510000 | B.56 |
| KTB RNHD 624520 R | 1281520000 | B.31 |
| KTB RNHD 624520 R | 1281520000 | B.57 |
| KTB RNHD 765015 R | 1281530000 | B.32 |
| KTB RNHD 765015 R | 1281530000 | B.58 |
| KTB RNHD 765020 R | 1281540000 | B.33 |
| KTB RNHD 765020 R | 1281540000 | B.59 |
| KTB RNHD 916115 R | 1281550000 | B.34 |
| KTB RNHD 916115 R | 1281550000 | B.60 |
| KTB RNHD 916120 R | 1281570000 | B.35 |
| KTB RNHD 916120 R | 1281570000 | B.61 |
| KTB RNHD 987420 R | 1281580000 | B.36 |
| KTB RNHD 987420 R | 1281580000 | B.62 |
| KTBI FS 302015 S2E0 | 1197200000 | B.107 |
| KTBI FS 302015 S2E1 | 1197210000 | B.107 |
| KTBI FS 303015 S2E0 | 1197220000 | B.108 |
| KTBI FS 303015 S2E1 | 1197230000 | B.108 |
| KTBI FS 303022 S2E0 | 1197240000 | B.109 |
| KTBI FS 303022 S2E1 | 1197250000 | B.109 |
| KTBI FS 403015 S2E0 | 1197260000 | B.110 |
| KTBI FS 403015 S2E1 | 1197270000 | B.110 |
| KTBI FS 403022 S2E0 | 1197280000 | B.111 |
| KTBI FS 403022 S2E1 | 1197290000 | B.111 |
| KTBI FS 404022 S2E0 | 1197300000 | B.112 |
| KTBI FS 404022 S2E1 | 1197310000 | B.112 |
| KTBI FS 504022 S2E0 | 1197320000 | B.113 |
| KTBI FS 504022 S2E1 | 1197330000 | B.113 |
| KTBI FS 505022 S2E0 | 1197340000 | B.114 |
| KTBI FS 505022 S2E1 | 1197350000 | B.114 |
| KTBI FS 604022 S2E0 | 1197360000 | B.115 |
| KTBI FS 604022 S2E1 | 1197370000 | B.115 |
| KTBI FS 606022 S2E0 | 1197380000 | B.116 |
| KTBI FS 606022 S2E1 | 1197390000 | B.116 |
| KTBI FS 806022 S2E0 | 1197400000 | B.117 |
| KTBI FS 806022 S2E1 | 1197410000 | B.117 |
| KTBI MF S2 SET | 1289180000 | B.93 |
| KTBI MOPL 3020 MSZN | 1309690000 | B.93 |
| KTBI MOPL 3020 MSZN | 1309690000 | B.107 |
| KTBI MOPL 3020 S2N | 1309700000 | B.93 |
| KTBI MOPL 3020 S2N | 1309700000 | B.107 |
| KTBI MOPL 3030 MSZN | 1310410000 | B.94 |
| KTBI MOPL 3030 S2N | 1310320000 | B.94 |
| KTBI MOPL 3030 S2N | 1310320000 | B.95 |
| KTBI MOPL 3030 S2N | 1310320000 | B.108 |
| KTBI MOPL 3030 S2N | 1310320000 | B.109 |
| KTBI MOPL 4030 MSZN | 1310420000 | B.96 |
| KTBI MOPL 4030 S2N | 1310330000 | B.96 |
| KTBI MOPL 4030 S2N | 1310330000 | B.97 |
| KTBI MOPL 4030 S2N | 1310330000 | B.110 |
| KTBI MOPL 4030 S2N | 1310330000 | B.111 |
| KTBI MOPL 4040 MSZN | 1310430000 | B.98 |
| KTBI MOPL 4040 MSZN | 1310430000 | B.112 |
| KTBI MOPL 4040 S2N | 1310340000 | B.98 |
| KTBI MOPL 4040 S2N | 1310340000 | B.112 |
| KTBI MOPL 5040 MSZN | 1310440000 | B.99 |
| KTBI MOPL 5040 MSZN | 1310440000 | B.113 |
| KTBI MOPL 5040 S2N | 1310350000 | B.99 |
| KTBI MOPL 5040 S2N | 1310350000 | B.113 |
| KTBI MOPL 5050 MSZN | 1310450000 | B.100 |
| KTBI MOPL 5050 MSZN | 1310450000 | B.114 |
| KTBI MOPL 5050 S2N | 1310360000 | B.100 |
| KTBI MOPL 5050 S2N | 1310360000 | B.114 |
| KTBI MOPL 6040 MSZN | 1310460000 | B.101 |
| KTBI MOPL 6040 MSZN | 1310460000 | B.115 |
| KTBI MOPL 6040 S2N | 1310370000 | B.101 |
| KTBI MOPL 6040 S2N | 1310370000 | B.115 |
| KTBI MOPL 6060 MSZN | 1310470000 | B.102 |
| KTBI MOPL 6060 MSZN | 1310470000 | B.116 |
| KTBI MOPL 6060 S2N | 1310380000 | B.102 |
| KTBI MOPL 6060 S2N | 1310380000 | B.116 |
| KTBI MOPL 8060 MSZN | 1310480000 | B.103 |
| KTBI MOPL 8060 MSZN | 1310480000 | B.117 |
| KTBI MOPL 8060 S2N | 1310390000 | B.103 |
| KTBI MOPL 8060 S2N | 1310390000 | B.117 |
| KTBI QL 302015 S2E0 | 1197430000 | B.93 |
| KTBI QL 302015 S2E1 | 1197440000 | B.93 |
| KTBI QL 303015 S2E0 | 1197450000 | B.94 |
| KTBI QL 303015 S2E1 | 1197460000 | B.94 |
| KTBI QL 303022 S2E0 | 1197470000 | B.95 |
| KTBI QL 303022 S2E1 | 1197480000 | B.95 |
| KTBI QL 403015 S2E0 | 1197490000 | B.96 |
| KTBI QL 403015 S2E1 | 1197500000 | B.96 |
| KTBI QL 403022 S2E0 | 1197510000 | B.97 |
| KTBI QL 403022 S2E1 | 1197520000 | B.97 |
| KTBI QL 404022 S2E0 | 1197530000 | B.98 |
| KTBI QL 404022 S2E1 | 1197540000 | B.98 |
| KTBI QL 504022 S2E0 | 1197550000 | B.99 |
| KTBI QL 504022 S2E1 | 1197560000 | B.99 |
| KTBI QL 505022 S2E0 | 1197570000 | B.100 |
| KTBI QL 505022 S2E1 | 1197580000 | B.100 |
| KTBI QL 604022 S2E0 | 1197590000 | B.101 |
| KTBI QL 604022 S2E1 | 1197600000 | B.101 |
| KTBI QL 606022 S2E0 | 1197610000 | B.102 |
| KTBI QL 606022 S2E1 | 1197620000 | B.102 |
| KTBI QL 806022 S2E0 | 1197630000 | B.103 |
| KTBI QL 806022 S2E1 | 1197640000 | B.103 |
| KUB M20 BS 0 NI 1 G16 | 1095100000 | C.45 |
| KUB M20 BS 0 NI 1 G20 | 1095140000 | C.45 |
| KUB M20 BS 0 NI 1 G20S | 1095120000 | C.45 |
| KUB M20 BS 0 NI 2 G16 | 1095110000 | C.45 |
| KUB M20 BS 0 NI 2 G20 | 1095150000 | C.45 |
| KUB M20 BS 0 NI 2 G20S | 1095130000 | C.45 |
| KUB M20 BS 0 SC 1 G16 | 1095340000 | C.44 |
| KUB M20 BS 0 SC 1 G20 | 1095380000 | C.44 |
| KUB M20 BS 0 SC 1 G20S | 1095360000 | C.44 |
| KUB M20 BS 0 SC 2 G16 | 1095350000 | C.44 |
| KUB M20 BS 0 SC 2 G20 | 1095390000 | C.44 |
| KUB M20 BS 0 SC 2 G20S | 1095370000 | C.44 |
| KUB M25 BS 0 NI 1 G25 | 1095160000 | C.45 |
| KUB M25 BS 0 NI 2 G25 | 1095170000 | C.45 |
| KUB M25 BS 0 SC 1 G25 | 1095400000 | C.44 |
| KUB M25 BS 0 SC 2 G25 | 1095410000 | C.44 |
| KUB M32 BS 0 NI 1 G32 | 1095180000 | C.45 |
| KUB M32 BS 0 NI 2 G32 | 1095190000 | C.45 |
| KUB M32 BS 0 SC 1 G32 | 1095420000 | C.44 |
| KUB M32 BS 0 SC 2 G32 | 1095430000 | C.44 |
| KUB M40 BS 0 NI 1 G40 | 1095200000 | C.45 |

| Type | Order No. | Page |
|---|---|---|
| KUB M40 BS O NI 2 G40 | 1095210000 | C.45 |
| KUB M40 BS O SC 1 G40 | 1095440000 | C.44 |
| KUB M40 BS O SC 2 G40 | 1095450000 | C.44 |
| KUB M50 BN O NI 2 G50 | 1095250000 | C.45 |
| KUB M50 BS O NI 1 G50 | 1095240000 | C.45 |
| KUB M50 BS O NI 1 G50S | 1095220000 | C.45 |
| KUB M50 BS O NI 2 G50S | 1095230000 | C.45 |
| KUB M50 BS O SC 1 G50 | 1095480000 | C.44 |
| KUB M50 BS O SC 1 G50S | 1095460000 | C.44 |
| KUB M50 BS O SC 2 G50 | 1095490000 | C.44 |
| KUB M50 BS O SC 2 G50S | 1095470000 | C.44 |
| KUB M63 BS O NI 1 G63 | 1095280000 | C.45 |
| KUB M63 BS O NI 1 G63S | 1095260000 | C.45 |
| KUB M63 BS O NI 2 G63 | 1095290000 | C.45 |
| KUB M63 BS O NI 2 G63S | 1095270000 | C.45 |
| KUB M63 BS O SC 1 G63 | 1095520000 | C.44 |
| KUB M63 BS O SC 1 G63S | 1095500000 | C.44 |
| KUB M63 BS O SC 2 G63 | 1095530000 | C.44 |
| KUB M63 BS O SC 2 G63S | 1095510000 | C.44 |
| KUB M75 BS O NI 1 G75 | 1095320000 | C.45 |
| KUB M75 BS O NI 1 G75S | 1095300000 | C.45 |
| KUB M75 BS O NI 2 G75 | 1095330000 | C.45 |
| KUB M75 BS O NI 2 G75S | 1095310000 | C.45 |
| KUB M75 BS O SC 1 G75 | 1095560000 | C.44 |
| KUB M75 BS O SC 1 G75S | 1095540000 | C.44 |
| KUB M75 BS O SC 2 G75 | 1095570000 | C.44 |
| KUB M75 BS O SC 2 G75S | 1095550000 | C.44 |
| KV 11-M | 1656390000 | C.14 |
| KV 13-M | 1656400000 | C.14 |
| KV 16-M | 1656410000 | C.14 |
| KV 21-M | 1656420000 | C.14 |
| KV 29-M | 1656430000 | C.14 |

## M

| Type | Order No. | Page |
|---|---|---|
| MF FPC | 9536040000 | B.209 |
| MF MPC | 9535600000 | B.202 |
| MF POK big | 9510910000 | B.171 |
| MF POK small | 9510900000 | B.166 |
| MF TBF | 0360800000 | B.194 |
| MOPL K1 BKVARIO SET | 8000004495 | B.153 |
| MOPL K1 N FE | 1905280000 | B.133 |
| MOPL K11 STAHL | 3073000000 | B.134 |
| MOPL K2 BKVARIO SET | 8000004496 | B.155 |
| MOPL K2 N FE | 1905270000 | B.135 |
| MOPL K21 STAHL | 3073020000 | B.136 |
| MOPL K3 BKVARIO SET | 8000004497 | B.157 |
| MOPL K3 N FE | 1898210000 | B.137 |
| MOPL K3 NT FE | 1899630000 | B.137 |
| MOPL K31 STAHL | 3073040000 | B.138 |
| MOPL K32 STAHL | 3073050000 | B.139 |
| MOPL K4 STAHL | 3073060000 | B.140 |
| MOPL K41 STAHL | 3073070000 | B.141 |
| MOPL K5 STAHL | 3073080000 | B.142 |
| MOPL K51 STAHL | 3073090000 | B.143 |
| MOPL K52 STAHL | 3073100000 | B.144 |
| MOPL K6 STAHL | 3073110000 | B.145 |
| MOPL K61 STAHL | 3073120000 | B.146 |
| MOPL K7 STAHL | 3073130000 | B.147 |
| MOPL K71 STAHL | 3073140000 | B.148 |
| MOPL SET BK12 S | 8000004135 | B.157 |
| MOPL SET BK4 S | 8000004129 | B.153 |
| MOPL SET BK6 S | 8000004132 | B.155 |
| MP FPC 20/20 | 9535920000 | B.209 |
| MP FPC 20/30 | 9535930000 | B.209 |
| MP FPC 20/40 | 9535940000 | B.210 |
| MP FPC 30/30 | 9535950000 | B.210 |
| MP FPC 30/40 | 9535960000 | B.211 |
| MP FPC 40/60 | 9535980000 | B.211 |
| MP MPC 07/12 | 9535540000 | B.202 |
| MP MPC 12/12 | 9535550000 | B.203 |
| MP MPC 12/17 | 9535560000 | B.203 |
| MP MPC 17/17 | 9535570000 | B.205 |
| MP MPC 17/25 | 9535580000 | B.206 |
| MP POK 32 | 9510700000 | B.170 |
| MP TBF 19/15 | 9502720000 | B.194 |
| MP TBF 30/19 | 3018950000 | B.194 |
| MP TBF 30/30 | 9502730000 | B.195 |
| MP TBF 37/30 | 9502740000 | B.195 |
| MP TBF 49/30 | 9500960000 | B.196 |
| MP TBF 56/30 | 9500950000 | B.196 |
| MP TBF 60/30 | 9502750000 | B.197 |
| MP TBF 60/37 | 9502910000 | B.198 |
| MP TBF 60/60 | 9502920000 | B.198 |
| MPC 07/12/07 7035 | 9535170000 | B.202 |
| MPC 07/12/07 trsp | 9535180000 | B.202 |
| MPC 07/12/12 7035 | 9535210000 | B.202 |
| MPC 07/12/12 trsp | 9535220000 | B.202 |
| MPC 12/12/07 7035 | 9535230000 | B.203 |
| MPC 12/12/07 trsp | 9535240000 | B.203 |
| MPC 12/17/07 7035 | 9535290000 | B.203 |
| MPC 12/17/07 trsp | 9535300000 | B.203 |
| MPC 12/17/10 7035 | 9535310000 | B.204 |
| MPC 12/17/10 trsp | 9535320000 | B.204 |
| MPC 12/17/12 7035 | 9535330000 | B.204 |
| MPC 12/17/12 trsp | 9535340000 | B.204 |
| MPC 17/17/07 7035 | 9535370000 | B.205 |
| MPC 17/17/07 trsp | 9535380000 | B.205 |
| MPC 17/17/15 7035 | 9535430000 | B.206 |
| MPC 17/17/15 trsp | 9535440000 | B.206 |
| MPC 17/25/10 7035 | 9535470000 | B.206 |
| MPC 17/25/10 trsp | 9535480000 | B.206 |

## P

| Type | Order No. | Page |
|---|---|---|
| PADLOCK KLIPPON TB SS | 0905680000 | B.15 |
| PEBZ M10 KTB S4 SET | 1192690000 | B.15 |
| POK MOPL 0808 | 9510570000 | B.166 |
| POK MOPL 0811 | 9510580000 | B.167 |
| POK MOPL 0816 | 9510680000 | B.168 |
| POK MOPL 0819 | 9510690000 | B.169 |
| POK MOPL 1212 | 9510590000 | B.171 |
| POK MOPL 1222 | 9510600000 | B.172 |
| POK MOPL 1616 | 9510610000 | B.173 |
| POK MOPL 1626 | 9510620000 | B.174 |
| POK MOPL 1636 | 9510630000 | B.175 |
| POK MOPL 1656 | 9510710000 | B.176 |
| POK MOPL 2525 | 9510640000 | B.181 |
| POK MOPL 2540 | 9510650000 | B.182 |
| POK MOPL 2560 | 9510660000 | B.179 |
| POK MOPL 4040 | 9510670000 | B.180 |

## S

| Type | Order No. | Page |
|---|---|---|
| SD FIXING SET | 1285200000 | B.15 |
| SD Set S2.0-5.5 | 9205560000 | E.18 |
| SD Set S2.5-5.5/PH1/2 | 9009740000 | E.18 |
| SD TH10 | 9009180000 | E.17 |
| SD TH15 | 9009170000 | E.17 |
| SD TH20 | 9009160000 | B.130 |
| SD TO 0,6X3,0 | 1323880000 | E.18 |
| SDI Set S2.0-5.5 | 9205550000 | E.16 |
| SDI Set S2.5-5.5/PH1/2 | 9009730000 | E.16 |
| SDI Set S2.5-5.5/PZ1/2 | 1128540000 | E.16 |
| SDI SL/PH 1 | 1318330000 | E.15 |
| SDI SL/PH 2 | 1318340000 | E.15 |
| SDIK PH0 | 9008560000 | E.15 |
| SDIK PH1 | 9008570000 | E.15 |
| SDIK PH2 | 9008580000 | E.15 |
| SDIK PH3 | 9008590000 | E.15 |
| SDIK PZ1 | 9008900000 | E.15 |
| SDIK PZ2 | 9008890000 | E.15 |
| SDIS 0.4X2.0X60 | 9205690000 | E.15 |
| SDIS 0.4X2.5X75 | 9008370000 | E.15 |
| SDIS 0.5X3.0X100 | 9008380000 | E.15 |
| SDIS 0.6X3.5X100 | 9008390000 | E.15 |
| SDIS 0.8X4.0X100 | 9008400000 | E.15 |
| SDIS 1.0X4.5X125 | 9008910000 | E.15 |
| SDIS 1.0X4.5X175 | 9205700000 | E.15 |
| SDIS 1.0X5.5X125 | 9008410000 | E.15 |
| SDIS 1.0X5.5X175 | 9205710000 | E.15 |
| SDIS 1.2X6.5X150 | 9008420000 | E.15 |
| SDIS 1.6X8.0X175 | 9008430000 | E.15 |
| SDIZ 0,8X5,5 150/248 | 9008640000 | E.15 |
| SDIZ 0.6X3.5X100 | 9008450000 | E.15 |
| SDIZ 0.8X4.0X100 | 9008460000 | E.15 |
| SDK PH0 | 9008470000 | E.17 |
| SDK PH1 | 9008480000 | E.17 |
| SDK PH2 | 9008490000 | E.17 |
| SDK PH3 | 9008500000 | E.17 |
| SDK PZ1 | 9008530000 | E.17 |
| SDK PZ2 | 9008540000 | E.17 |
| SDK PZ3 | 9008550000 | E.17 |
| SDQ T15 | 1318390000 | E.22 |
| SDQ T20 | 1318400000 | E.22 |
| SDQ T40 | 1318410000 | E.22 |
| SDS 0.4X2.0X60 | 9037160000 | E.17 |
| SDS 0.4X2.5X75 | 9009030000 | E.17 |
| SDS 0.5X3.0X80 | 9008320000 | E.17 |
| SDS 0.6X3.5X100 | 9008330000 | E.17 |
| SDS 0.6X3.5X200 | 9010110000 | E.17 |
| SDS 0.8X4.0X100 | 9008340000 | E.17 |
| SDS 0.8X4.0X125 | 9009020000 | E.17 |
| SDS 1.0X5.5X150 | 9008350000 | E.17 |
| SDS 1.2X6.5X150 | 9009010000 | E.17 |
| SFNS5 VKMU M5 SW15 | 0433500000 | B.120 |
| SK 10,0x125 | 9009070000 | B.120 |
| SK WSD-S 1,5-10,0 | 9008850000 | E.19 |
| SKMU EMV M12 | 1777610000 | C.50 |
| SKMU EMV M16 | 1777620000 | C.50 |
| SKMU EMV M20 | 1777630000 | C.50 |
| SKMU EMV M25 | 1777640000 | C.50 |
| SKMU EMV M32 | 1777650000 | C.50 |
| SKMU EMV M40 | 1777660000 | C.50 |
| SKMU EMV M50 | 1777670000 | C.50 |
| SKMU EMV M63 | 1777680000 | C.50 |
| SKMU EMV PG 36 | 1777710000 | C.50 |
| SKMU EMV PG 42 | 1777700000 | C.50 |
| SKMU EMV PG 48 | 1777690000 | C.50 |
| SKMU EMV PG11 | 1718920000 | C.50 |
| SKMU EMV PG13,5 | 1718930000 | C.50 |
| SKMU EMV PG16 | 1718940000 | C.50 |
| SKMU EMV PG21 | 1718950000 | C.50 |
| SKMU EMV PG29 | 1718960000 | C.50 |
| SKMU EMV PG7 | 1718900000 | C.50 |
| SKMU EMV PG9 | 1718910000 | C.50 |
| SKMU M12 - K GR | 1772440000 | C.46 |
| SKMU M12 - MS | 1772360000 | C.48 |
| SKMU M12-K SW | 1806540000 | C.47 |
| SKMU M16 - K GR | 1772450000 | C.46 |
| SKMU M16 K SW | 1736920000 | C.47 |
| SKMU M16 MS | 1736990000 | C.48 |
| SKMU M16 MS SC | 0930640001 | C.49 |
| SKMU M20 - K GR | 1772460000 | C.46 |
| SKMU M20 K SW | 1736930000 | C.47 |
| SKMU M20 MS | 1737000000 | C.48 |
| SKMU M20 MS SC | 0930640002 | C.49 |
| SKMU M25 - K GR | 1772470000 | C.46 |
| SKMU M25 K SW | 1736940000 | C.47 |
| SKMU M25 MS | 1737010000 | C.48 |
| SKMU M25 MS SC | 0930640003 | C.49 |
| SKMU M32 - K GR | 1772480000 | C.46 |
| SKMU M32 K SW | 1736950000 | C.47 |
| SKMU M32 MS | 1737020000 | C.48 |
| SKMU M32 MS SC | 0930640004 | C.49 |
| SKMU M40 - K GR | 1772490000 | C.46 |
| SKMU M40 K SW | 1736960000 | C.47 |
| SKMU M40 MS | 1737030000 | C.48 |
| SKMU M40 MS SC | 0930640005 | C.49 |
| SKMU M50 - K GR | 1772500000 | C.46 |
| SKMU M50 K SW | 1736970000 | C.47 |
| SKMU M50 MS | 1737040000 | C.48 |
| SKMU M50 MS SC | 0930640006 | C.49 |
| SKMU M63 - K GR | 1772510000 | C.46 |
| SKMU M63 K SW | 1736980000 | C.47 |
| SKMU M63 MS | 1737050000 | C.48 |
| SKMU M63 MS SC | 0930640007 | C.49 |
| SKMU M75 MS | 1737060000 | C.48 |
| SKMU M75 MS SC | 0930640008 | C.49 |
| SKMU M80 MS SC | 0930640009 | C.49 |
| SKMU M85 MS SC | 0930640010 | C.49 |
| SKMU M90 MS SC | 0930640011 | C.49 |
| SKMU PG 13,5-K GR | 1697470000 | C.46 |
| SKMU PG11-K GR | 1697460000 | C.46 |
| SKMU PG11-K SW | 1719120000 | C.47 |
| SKMU PG11-MS | 1694090000 | C.48 |
| SKMU PG13,5-K SW | 1719130000 | C.47 |
| SKMU PG13,5-MS | 1694100000 | C.48 |
| SKMU PG16-K GR | 1697480000 | C.46 |
| SKMU PG16-K SW | 1719140000 | C.47 |
| SKMU PG16-MS | 1694110000 | C.48 |
| SKMU PG21-K GR | 1698220000 | C.46 |
| SKMU PG21-K SW | 1719150000 | C.47 |
| SKMU PG21-MS | 1719200000 | C.48 |
| SKMU PG29-K GR | 1698230000 | C.46 |
| SKMU PG29-K SW | 1719160000 | C.47 |
| SKMU PG29-MS | 1719210000 | C.48 |
| SKMU PG36-K GR | 1698240000 | C.46 |
| SKMU PG36-K SW | 1719170000 | C.47 |
| SKMU PG36-MS | 1719220000 | C.48 |
| SKMU PG42-K GR | 1698250000 | C.46 |
| SKMU PG42-K SW | 1719180000 | C.47 |
| SKMU PG42-MS | 1719230000 | C.48 |
| SKMU PG48-K GR | 1719090000 | C.46 |
| SKMU PG48-K SW | 1719190000 | C.47 |
| SKMU PG48-MS | 1719240000 | C.48 |
| SKMU PG7-K GR | 1697440000 | C.46 |
| SKMU PG7-K SW | 1719100000 | C.47 |
| SKMU PG7-MS | 1694070000 | C.48 |
| SKMU PG9-K GR | 1697450000 | C.46 |
| SKMU PG9-K SW | 1719110000 | C.47 |
| SKMU PG9-MS | 1694080000 | C.48 |
| SKS 2,0-8,0 | 9008860000 | E.19 |
| SKS 2,0-8,0 MR | 9008870000 | E.19 |
| SP M6 10 S2 | 0935110000 | B.15 |
| SP M6 15 MSZN | 3896100000 | B.93 |
| SP M6 15 S2 | 0935120000 | B.15 |
| SP M6 20 MSZN | 3896200000 | B.93 |
| SP M6 20 S2 | 0935130000 | B.15 |
| SP M6 30 MSZN | 3896300000 | B.93 |
| SP M6 30 S2 | 0935140000 | B.15 |
| SYSTEM 11+1 | 9009750000 | E.20 |
| SZS M16 | 1736300000 | C.59 |
| SZS M20 | 1736310000 | C.59 |
| SZS M25 | 1736320000 | C.59 |
| SZS M32 | 1736330000 | C.59 |
| SZS M40 | 1736340000 | C.59 |
| SZS M50 | 1736350000 | C.59 |
| SZS M63 | 1736360000 | C.59 |

## T

| Type | Order No. | Page |
|---|---|---|
| TBF 19/15/14 7035 | 0360100000 | B.194 |
| TBF 19/15/14 trsp | 0500500000 | B.194 |
| TBF 30/19/18 7035 | 0360200000 | B.194 |
| TBF 30/19/18 trsp | 0500600000 | B.194 |
| TBF 30/30/18 7035 | 0360300000 | B.195 |
| TBF 30/30/18 trsp | 0500700000 | B.195 |
| TBF 37/30/18 7035 | 0360400000 | B.195 |
| TBF 37/30/18 trsp | 0500800000 | B.195 |
| TBF 49/30/18 7035 | 9502800000 | B.196 |
| TBF 49/30/21 trsp | 9502840000 | B.196 |
| TBF 56/30/18 7035 | 9502810000 | B.196 |
| TBF 56/30/21 trsp | 9502850000 | B.196 |
| TBF 60/30/18 7035 | 0360500000 | B.197 |
| TBF 60/30/21 trsp | 0500900000 | B.197 |
| TBF 60/37/18 7035 | 9502820000 | B.198 |
| TBF 60/37/21 trsp | 9502860000 | B.198 |
| TBF 60/60/18 7035 | 9502830000 | B.198 |
| TBF 60/60/21 trsp | 9502870000 | B.198 |
| TH-S 9-40 | 9008880000 | E.19 |
| TPSD FIXING SET KTB | 1252190000 | B.15 |
| TPSDHA KTB 100X25 S2 2R | 1257640000 | B.15 |
| TPSDHA KTB 130X50 S2 R | 1283450000 | B.15 |
| TPSDHA KTB 70X70M3 S2 R | 1279320000 | B.15 |
| TS15 114 Klippon K21 CSS | 1910020000 | B.136 |
| TS15 147 Klippon POK3 CSS | 1928080000 | B.168 |
| TS15 155 Klippon K3 CSS | 1910030000 | B.137 |
| TS15 164 Klippon K31 CSS | 1910040000 | B.138 |
| TS15 60 KLippon K1 CSS | 1909980000 | B.133 |
| TS15 64 Klippon K11 | 1909990000 | B.134 |
| TS15 68 Klippon POK1 CSS | 1928060000 | B.166 |
| TS15 90 KLippon K2 CSS | 1910010000 | B.135 |
| TS15 98 Klippon POK2 CSS | 1928070000 | B.167 |
| TS35 105 Klippon K41/POK4 | 1910070000 | B.141 |
| TS35 64 Klippon K4K11 | 1910060000 | B.140 |
| TS35 POK4 Set | 1928110000 | B.171 |
| TS35 POK51 Set | 1928130000 | B.173 |
| TS35/140 Klippon K52 POK51 | 1910100000 | B.144 |
| TS35/148 KLIPPON K5 CSS | 1910080000 | B.142 |
| TS35/172 KLIPPON K6 CSS | 1910110000 | B.145 |
| TS35/203 KLIPPON K51POK5 | 1910090000 | B.143 |
| TS35/235 KLIPPON K32 CSS | 1910050000 | B.139 |
| TS35/239 KLIPPON K61POK6 | 1910120000 | B.146 |
| TS35/260 KLIPPON K71 CSS | 1910140000 | B.148 |
| TS35/324 KLIPPON K7 CSS | 1910130000 | B.147 |

## V

| Type | Order No. | Page |
|---|---|---|
| VG 11-K68 | 1568990000 | C.7 |
| VG 11-K68 SKS | 1720490000 | C.8 |
| VG 11-MS54 | 0260700000 | C.9 |
| VG 11-MS54-ZE | 1718820000 | C.12 |
| VG 11-MS68 | 1569080000 | C.11 |
| VG 11-SS 68 KB 5-10 | 1009760000 | C.17 |
| VG 13,5-K68 | 1569000000 | C.7 |
| VG 13,5-MS54 | 0260800000 | C.9 |
| VG 13,5-MS54-ZE | 1718830000 | C.12 |
| VG 13,5-MS68 | 1569090000 | C.11 |
| VG 13.5-K68 SKS | 1720500000 | C.8 |
| VG 16-K68 | 1569010000 | C.7 |
| VG 16-K68 SKS | 1720510000 | C.8 |
| VG 16-MS54 | 0261400000 | C.9 |
| VG 16-MS54-ZE | 1718840000 | C.12 |
| VG 16-MS68 | 1569100000 | C.11 |
| VG 16-SS 68 KB 10-14 | 1009780000 | C.17 |
| VG 21-K68 | 1569020000 | C.7 |
| VG 21-K68 SKS | 1720520000 | C.8 |
| VG 21-MS54 | 0260900000 | C.9 |
| VG 21-MS54-ZE | 1718850000 | C.12 |
| VG 21-MS68 | 1569110000 | C.11 |
| VG 21-SS 68 KB 13-18 | 1009790000 | C.17 |
| VG 29-K68 | 1569030000 | C.7 |
| VG 29-MS54 | 0261000000 | C.9 |
| VG 29-MS54-ZE | 1718860000 | C.12 |
| VG 29-MS68 | 1569120000 | C.11 |
| VG 29-SS 68 KB 18-25 | 1009800000 | C.17 |
| VG 36-K68 | 1569040000 | C.7 |
| VG 36-MS54 | 0497600000 | C.9 |
| VG 36-MS54-ZE | 1718870000 | C.12 |
| VG 36-MS68 | 1569130000 | C.11 |
| VG 36-SS 68 KB 22-32 | 1009810000 | C.17 |
| VG 42-K68 | 1569050000 | C.7 |
| VG 42-MS54 | 0497700000 | C.9 |
| VG 42-MS54-ZE | 1718880000 | C.12 |
| VG 42-MS68 | 1569140000 | C.11 |
| VG 42-SS 68 KB 30-38 | 1009820000 | C.17 |
| VG 48-K68 | 1718770000 | C.7 |
| VG 48-MS54 | 1718780000 | C.9 |
| VG 48-MS54-ZE | 1718890000 | C.12 |
| VG 48-MS68 | 1718790000 | C.11 |
| VG 48-SS 68 KB 34-44 | 1009830000 | C.17 |
| VG 7-K68 | 1568970000 | C.7 |
| VG 7-MS54 | 0521500000 | C.9 |
| VG 7-MS54-ZE | 1718800000 | C.12 |
| VG 7-MS68 | 1569060000 | C.11 |
| VG 7-SS 68 KB 3-6.5 | 1009740000 | C.17 |
| VG 9-K68 | 1568980000 | C.7 |
| VG 9-K68 SKS | 1720480000 | C.8 |
| VG 9-MS54 | 0261500000 | C.9 |
| VG 9-MS54-ZE | 1718810000 | C.12 |
| VG 9-MS68 | 1569070000 | C.11 |
| VG 9-SS 68 KB 4-8 | 1009750000 | C.17 |
| VG EMV M18X1,5 | 1706920000 | C.15 |
| VG EMV M20X1,5 | 1706940000 | C.15 |
| VG EMV M24X1,5 | 1706930000 | C.15 |
| VG EMV M25X1,5 | 1706950000 | C.15 |
| VG EMV PG 11 | 1706870000 | C.15 |
| VG EMV PG 13,5 | 1706880000 | C.15 |
| VG EMV PG 16 K14 | 1706890000 | C.15 |
| VG EMV PG 16 K18 | 1713880000 | C.15 |
| VG EMV PG 21 K18 | 1706900000 | C.15 |
| VG EMV PG 29 K26 | 1706910000 | C.15 |
| VG EMV PG 29 K29 | 1713900000 | C.15 |
| VG EMV PG 7/9 | 1713870000 | C.15 |
| VG EMV PG 9/11 | 1706860000 | C.15 |

| Type | Order No. | Page |
|---|---|---|
| VG EMV PG K28 | 1713890000 | C.15 |
| VG EMV PG36 K32-27 | 1770410000 | C.15 |
| VG H M20 MS | 1921720000 | C.14 |
| VG H M25 MS | 1921740000 | C.14 |
| VG H M32 MS | 1921760000 | C.14 |
| VG H M40 MS | 1921770000 | C.14 |
| VG M12 - MS 1/EMV | 1909490000 | C.16 |
| VG M12 - MS 68 | 1772200000 | C.11 |
| VG M12-1/K68 | 1772280000 | C.7 |
| VG M12-K67 | 1909660000 | C.6 |
| VG M12-K68 SKS | 1776700000 | C.8 |
| VG M16 - K 68 | 1772290000 | C.7 |
| VG M16 - MS 1/EMV | 1909500000 | C.16 |
| VG M16 - MS 68 | 1772210000 | C.11 |
| VG M16-1/K68 | 1909860000 | C.7 |
| VG M16-1/MS68 | 1909910000 | C.11 |
| VG M16-K67 4-8 | 1909670000 | C.6 |
| VG M16-K67 5-10 | 1909680000 | C.6 |
| VG M16-K68 SKS | 1776710000 | C.8 |
| VG M20 - MS 1/EMV | 1909510000 | C.16 |
| VG M20 - MS 68 | 1772220000 | C.11 |
| VG M20-1/K68 | 1772300000 | C.7 |
| VG M20-K67 10-14 | 1909700000 | C.6 |
| VG M20-K67 6-12 | 1909690000 | C.6 |
| VG M20-K68 SKS 10-14 | 1776720000 | C.8 |
| VG M20-K68 SKS 6-12 | 1778860000 | C.8 |
| VG M20-MS54 ZR 4-13 | 1009560000 | C.10 |
| VG M25 - K 68 | 1772310000 | C.7 |
| VG M25 - MS 1/EMV | 1909520000 | C.16 |
| VG M25 - MS 68 | 1772230000 | C.11 |
| VG M25-1/K68 | 1909870000 | C.7 |
| VG M25-1/MS68 | 1909920000 | C.11 |
| VG M25-K67 | 1909710000 | C.6 |
| VG M25-K68 SKS | 1776730000 | C.8 |
| VG M25-MS54 ZR 8.5-18 | 1009570000 | C.10 |
| VG M32 - K 68 | 1772320000 | C.7 |
| VG M32 - MS 1/EMV | 1909530000 | C.16 |
| VG M32 - MS 68 | 1772240000 | C.11 |
| VG M32-1/K68 | 1909880000 | C.7 |
| VG M32-1/MS68 | 1909930000 | C.11 |
| VG M32-K67 | 1909720000 | C.6 |
| VG M32-MS54 ZR 16-26 | 1009580000 | C.10 |
| VG M40 - K 68 | 1772330000 | C.7 |
| VG M40 - MS 1/EMV | 1909540000 | C.16 |
| VG M40 - MS 68 | 1772250000 | C.11 |
| VG M40-1/K68 | 1909890000 | C.7 |
| VG M40-1/MS68 | 1909940000 | C.11 |
| VG M40-K67 | 1909730000 | C.6 |
| VG M40-MS54 ZR 23-30 | 1009590000 | C.10 |
| VG M50 - K 68 | 1772340000 | C.7 |
| VG M50 - MS 1/EMV | 1909550000 | C.16 |
| VG M50 - MS 68 | 1772260000 | C.11 |
| VG M50-1/MS68 | 1909950000 | C.11 |
| VG M50-K67 | 1909740000 | C.6 |
| VG M50-MS54 ZR 32-40 | 1009600000 | C.10 |
| VG M63 - MS 1/EMV | 1909560000 | C.16 |
| VG M63 - MS 68 | 1772270000 | C.11 |
| VG M63-1/K68 | 1772350000 | C.7 |
| VG M63-K67 | 1909750000 | C.6 |
| VG PG11-K67 | 1909780000 | C.6 |
| VG PG13,5-K67 | 1909790000 | C.6 |
| VG PG16-K67 | 1909800000 | C.6 |
| VG PG16-MS54 ZR 7.5-15 | 1009620000 | C.10 |
| VG PG21-K67 | 1909810000 | C.6 |
| VG PG21-MS54 ZR 10-19 | 1009630000 | C.10 |
| VG PG29-K67 | 1909820000 | C.6 |
| VG PG29-MS54 ZR 18-27 | 1009640000 | C.10 |
| VG PG36-K67 | 1909830000 | C.6 |
| VG PG36-MS54 ZR 24-33 | 1009650000 | C.10 |
| VG PG42-K67 | 1909840000 | C.6 |
| VG PG42-MS54 ZR 30-39 | 1009670000 | C.10 |
| VG PG48-K67 | 1909850000 | C.6 |
| VG PG7-K67 | 1909760000 | C.6 |
| VG PG9-K67 | 1909770000 | C.6 |
| VGM12-MS54 KB 5,0-7,0 | 1778410000 | C.9 |
| VGM12-MS54 KB 6,0-8,0 | 1778400000 | C.9 |
| VGM12-MS54 ZE 5,0-7,0 | 1778420000 | C.12 |
| VGM12-SS 68 KB 3-6.5 | 1009840000 | C.17 |
| VGM16-MS54 | 1778390000 | C.9 |
| VGM16-MS54 ZE | 1778440000 | C.12 |
| VGM16-MS54ZE BS4-10 | 1005190000 | C.13 |
| VGM16-MS54ZE BS6.5-12.5 | 1005200000 | C.13 |
| VGM16-SS 68 KB 4-8 | 1009850000 | C.17 |
| VGM20-MS54 KB 10,0-12,0 | 1778370000 | C.9 |
| VGM20-MS54 KB 8,0-10,0 | 1778380000 | C.9 |
| VGM20-MS54 ZE | 1778450000 | C.12 |
| VGM20-MS54 ZE 6,0-13,5 | 1778460000 | C.12 |
| VGM20-MS54ZE BS1 | 1005210000 | C.13 |
| VGM20-MS54ZE BS6.5-15 | 1005220000 | C.13 |
| VGM20-SS 68 KB 6-12 | 1009860000 | C.17 |
| VGM25-MS54 KB 12,0-14,0 | 1778360000 | C.9 |
| VGM25-MS54 KB 15,0-17,0 | 1778350000 | C.9 |
| VGM25-MS54 ZE | 1778480000 | C.12 |
| VGM25-MS54ZE BS9-19 | 1005230000 | C.13 |
| VGM25-SS 68 KB 10-14 | 1009870000 | C.17 |
| VGM32-MS54 | 1778340000 | C.9 |
| VGM32-MS54 ZE | 1778490000 | C.12 |
| VGM32-MS54ZE BS17-27 | 1005240000 | C.13 |
| VGM32-SS 68 KB 13-18 | 1009880000 | C.17 |

| Type | Order No. | Page |
|---|---|---|
| VGM40-MS54 | 1778330000 | C.9 |
| VGM40-MS54 ZE | 1778500000 | C.12 |
| VGM40-SS 68 KB 18-25 | 1009890000 | C.17 |
| VGM50-MS54 KB 31,0-33,0 | 1778320000 | C.9 |
| VGM50-MS54 KB 39,0-41,0 | 1778310000 | C.9 |
| VGM50-MS54 ZE | 1778520000 | C.12 |
| VGM50-SS 68 KB 22-32 | 1009900000 | C.17 |
| VGM63-MS54 | 1778300000 | C.9 |
| VGM63-MS54 ZE | 1778530000 | C.12 |
| VGM63-SS 68 KB 34-44 | 1009910000 | C.17 |
| VGPG13.5-MS54ZR7.5-12.5 | 1009610000 | C.10 |
| VP 11-K54 | 0294860000 | C.60 |
| VP 11-MS65 | 0294800000 | C.61 |
| VP 13,5-K54 | 0294960000 | C.60 |
| VP 13,5-MS65 | 0294900000 | C.61 |
| VP 16-K54 | 0295060000 | C.60 |
| VP 16-MS65 | 0295000000 | C.61 |
| VP 21-K54 | 0295160000 | C.60 |
| VP 21-MS65 | 0295100000 | C.61 |
| VP 29-K54 | 0501160000 | C.60 |
| VP 29-MS65 | 0501100000 | C.61 |
| VP 36-K54 | 0501260000 | C.60 |
| VP 36-MS65 | 0501200000 | C.61 |
| VP 42-K54 | 0501360000 | C.60 |
| VP 42-MS65 | 0501300000 | C.61 |
| VP 48-K54 | 1719260000 | C.60 |
| VP 48-MS65 | 1719270000 | C.61 |
| VP 7-K54 | 1719250000 | C.60 |
| VP 7-MS65 | 0521600000 | C.61 |
| VP 9-K54 | 0294760000 | C.60 |
| VP 9-MS65 | 0294700000 | C.61 |
| VP M12 K54 | 1776930000 | C.60 |
| VP M12-MS65 | 1777720000 | C.61 |
| VP M16 EXE MS | 1210890000 | C.63 |
| VP M16 K54 | 1776920000 | C.60 |
| VP M16-EXE MS | 1737140000 | B.152 |
| VP M16-EXE SW | 1737070000 | C.62 |
| VP M16-MS65 | 1777730000 | C.61 |
| VP M20 EXE MS | 1210900000 | C.63 |
| VP M20 K54 | 1776910000 | C.60 |
| VP M20-EXE MS | 1737150000 | B.153 |
| VP M20-EXE SW | 1737080000 | C.62 |
| VP M20-MS65 | 1777740000 | C.61 |
| VP M25 EXE MS | 1210910000 | C.63 |
| VP M25 K54 | 1776900000 | C.60 |
| VP M25-EXE SW | 1737090000 | C.62 |
| VP M25-MS65 | 1777750000 | C.61 |
| VP M32 EXE MS | 1210920000 | C.63 |
| VP M32 K54 | 1776940000 | C.60 |
| VP M32-EXE SW | 1737100000 | C.62 |
| VP M32-MS65 | 1777760000 | C.61 |
| VP M40 EXE MS | 1210930000 | C.63 |
| VP M40 K54 | 1776950000 | C.60 |
| VP M40-EXE SW | 1737110000 | C.62 |
| VP M40-MS65 | 1777770000 | C.61 |
| VP M50 EXE MS | 1210940000 | C.63 |
| VP M50 K54 | 1776960000 | C.60 |
| VP M50-EXE SW | 1737120000 | C.62 |
| VP M50-MS65 | 1777780000 | C.61 |
| VP M63 EXE MS | 1210950000 | C.63 |
| VP M63 K54 | 1776970000 | C.60 |
| VP M63-EXE SW | 1737130000 | C.62 |
| VP M63-MS65 | 1777790000 | C.61 |


## W


| | | |
|---|---|---|
| WK 1/4" C6,3 E6,3 | 9202510000 | E.11 |
| WK IK PH0 | 9918460000 | E.12 |
| WK IK PH1 | 9918470000 | E.12 |
| WK IK PH2 | 9918480000 | E.12 |
| WK IK PZ0 | 9918490000 | E.12 |
| WK IK PZ1 | 9918500000 | E.12 |
| WK IK PZ2 | 9918510000 | E.12 |
| WK IK SL/PH1 | 1318130000 | E.12 |
| WK IK SL/PH2 | 1318140000 | E.12 |
| WK K PH0 | 9918570000 | E.11 |
| WK K PH1 | 9918580000 | E.11 |
| WK K PH2 | 9918590000 | E.11 |
| WK K PZ0 | 9918600000 | E.11 |
| WK K PZ1 | 9918610000 | E.11 |
| WK K PZ2 | 9918620000 | E.11 |
| WK S 0,4x2,5 | 9918520000 | E.11 |
| WK S 0,5x3,0 | 9918530000 | E.11 |
| WK S 0,6x3,5 | 9918540000 | E.11 |
| WK S 0,8x4,0 | 9918550000 | E.11 |
| WK S 1,0x5,5 | 9918560000 | E.11 |
| WK SI 0,4x2,5 | 9918410000 | E.12 |
| WK SI 0,5x3,0 | 9918420000 | E.12 |
| WK SI 0,6x3,5 | 9918430000 | E.12 |
| WK SI 0,8x4,0 | 9918440000 | E.12 |
| WK SI 1,0x5,5 | 9918450000 | E.12 |

| Order No. | Type | Page |
|---|---|---|

## 0230000000

| | | |
|---|---|---|
| 0235000000 | IS 8 DIN 6911 | E.22 |

## 0260000000

| | | |
|---|---|---|
| 0260700000 | VG 11-MS54 | C.9 |
| 0260800000 | VG 13,5-MS54 | C.9 |
| 0260900000 | VG 21-MS54 | C.9 |
| 0261000000 | VG 29-MS54 | C.9 |
| 0261400000 | VG 16-MS54 | C.9 |
| 0261500000 | VG 9-MS54 | C.9 |

## 0290000000

| | | |
|---|---|---|
| 0294700000 | VP 9-MS65 | C.61 |
| 0294760000 | VP 9-K54 | C.60 |
| 0294800000 | VP 11-MS65 | C.61 |
| 0294860000 | VP 11-K54 | C.60 |
| 0294900000 | VP 13,5-MS65 | C.61 |
| 0294960000 | VP 13,5-K54 | C.60 |
| 0295000000 | VP 16-MS65 | C.61 |
| 0295060000 | VP 16-K54 | C.60 |
| 0295100000 | VP 21-MS65 | C.61 |
| 0295160000 | VP 21-K54 | C.60 |

## 0340000000

| | | |
|---|---|---|
| 0342000000 | KLIPPON K1 | B.133 |
| 0342100000 | KLIPPON K2 | B.135 |
| 0342200000 | KLIPPON K3 | B.137 |
| 0342300000 | KLIPPON K4 | B.140 |
| 0342400000 | KLIPPON K5 | B.142 |
| 0342500000 | KLIPPON K6 | B.145 |
| 0342600000 | KLIPPON K7 | B.147 |

## 0360000000

| | | |
|---|---|---|
| 0360100000 | TBF 19/15/14 7035 | B.194 |
| 0360200000 | TBF 30/19/18 7035 | B.194 |
| 0360300000 | TBF 30/30/18 7035 | B.195 |
| 0360400000 | TBF 37/30/18 7035 | B.195 |
| 0360500000 | TBF 60/30/18 7035 | B.197 |
| 0360800000 | MF TBF | B.194 |

## 0400000000

| | | |
|---|---|---|
| 0407900000 | IS 6 DIN 6911 | E.22 |

## 0430000000

| | | |
|---|---|---|
| 0433500000 | SFNS5 VKMU M5 SW15 | B.120 |

## 0480000000

| | | |
|---|---|---|
| 0485100000 | IS 4 DIN 6911 | E.22 |

## 0490000000

| | | |
|---|---|---|
| 0497600000 | VG 36-MS54 | C.9 |
| 0497700000 | VG 42-MS54 | C.9 |

## 0500000000

| | | |
|---|---|---|
| 0500500000 | TBF 19/15/14 trsp | B.194 |
| 0500600000 | TBF 30/19/18 trsp | B.194 |
| 0500700000 | TBF 30/30/18 trsp | B.195 |
| 0500800000 | TBF 37/30/18 trsp | B.195 |
| 0500900000 | TBF 60/30/21 trsp | B.197 |
| 0501100000 | VP 29-MS65 | C.61 |
| 0501160000 | VP 29-K54 | C.60 |
| 0501200000 | VP 36-MS65 | C.61 |
| 0501260000 | VP 36-K54 | C.60 |
| 0501300000 | VP 42-MS65 | C.61 |
| 0501360000 | VP 42-K54 | C.60 |

## 0520000000

| | | |
|---|---|---|
| 0521500000 | VG 7-MS54 | C.9 |
| 0521600000 | VP 7-MS65 | C.61 |

## 0570000000

| | | |
|---|---|---|
| 0573200000 | KLIPPON K0 | B.130 |
| 0573300000 | KLIPPON K11 | B.134 |
| 0573400000 | KLIPPON K21 | B.136 |
| 0573500000 | KLIPPON K31 | B.138 |
| 0573600000 | KLIPPON K61 | B.146 |
| 0573700000 | KLIPPON K71 | B.148 |

## 0640000000

| | | |
|---|---|---|
| 0642600000 | FKSC M6X8 D9/SW3 | B.15 |

## 0880000000

| | | |
|---|---|---|
| 0885410000 | KSPM M20 BSC | C.65 |
| 0885420000 | KSPM M25 BSC | C.65 |
| 0885430000 | KSPM M32 BSC | C.65 |

| Order No. | Type | Page |
|---|---|---|
| 0885440000 | KSPM M40 BSC | C.65 |
| 0885450000 | KSPM M50 BSC | C.65 |
| 0886670000 | KSPA M20 BNI | C.64 |
| 0886680000 | KSPA M25 BNI | C.64 |
| 0886690000 | KSPA M32 BNI | C.64 |
| 0886700000 | KSPA M40 BNI | C.64 |
| 0886710000 | KSPA M50 BNI | C.64 |
| 0886720000 | KSPM M20 SSC | C.65 |
| 0886730000 | KSPM M25 SSC | C.65 |
| 0886740000 | KSPM M32 SSC | C.65 |
| 0886750000 | KSPM M40 SSC | C.65 |
| 0887480000 | KSPM M16 BSC | C.65 |
| 0887490000 | KSPA M16 BNI | C.64 |
| 0887500000 | KSPM M16 SSC | C.65 |

## 0890000000

| | | |
|---|---|---|
| 0899750000 | KSWF M20 | C.54 |
| 0899770000 | KSWF M25 | C.54 |
| 0899780000 | KSWN M40 | C.53 |

## 0900000000

| | | |
|---|---|---|
| 0900660000 | KSWN M50 | C.53 |
| 0905680000 | PADLOCK KLIPPON TB SS | B.15 |

## 0930000000

| | | |
|---|---|---|
| 0930001211 | KDSU M20 BS O SC 1 G16 | C.32 |
| 0930001212 | KDSU M20 BS O SC 2 G16 | C.32 |
| 0930001221 | KDSU M20 BS O NI 1 G16 | C.33 |
| 0930001222 | KDSU M20 BS O NI 2 G16 | C.33 |
| 0930011213 | KDSU M20 BS O SC 1 G20S | C.32 |
| 0930011214 | KDSU M20 BS O SC 2 G20S | C.32 |
| 0930011223 | KDSU M20 BS O NI 1 G20S | C.33 |
| 0930011224 | KDSU M20 BS O NI 2 G20S | C.33 |
| 0930021211 | KDSU M20 BS O SC 1 G20 | C.32 |
| 0930021212 | KDSU M20 BS O SC 2 G20 | C.32 |
| 0930021221 | KDSU M20 BS O NI 1 G20 | C.33 |
| 0930021222 | KDSU M20 BS O NI 2 G20 | C.33 |
| 0930031211 | KDSU M25 BS O SC 1 G25 | C.32 |
| 0930031212 | KDSU M25 BS O SC 2 G25 | C.32 |
| 0930031221 | KDSU M25 BS O NI 1 G25 | C.33 |
| 0930031222 | KDSU M25 BS O NI 2 G25 | C.33 |
| 0930041211 | KDSU M32 BS O SC 1 G32 | C.32 |
| 0930041212 | KDSU M32 BS O SC 2 G32 | C.32 |
| 0930041221 | KDSU M32 BS O NI 1 G32 | C.33 |
| 0930041222 | KDSU M32 BS O NI 2 G32 | C.33 |
| 0930051212 | KDSU M40 BS O SC 2 G40 | C.32 |
| 0930051222 | KDSU M40 BS O NI 2 G40 | C.33 |
| 0930061213 | KDSU M50 BS O SC 1 G50S | C.32 |
| 0930061224 | KDSU M50 BS O NI 2 G50S | C.33 |
| 0930091222 | KDSU M63 BS O NI 2 G63 | C.33 |
| 0930111212 | KDSU M75 BS O SC 2 G75 | C.32 |
| 0930481212 | KSG M20 BS O SC 2 G16 | C.43 |
| 0930481222 | KSG M20 BS O NI 2 G16 | C.43 |
| 0930491224 | KSG M20 BS O NI 2 G20S | C.43 |
| 0930501212 | KSG M20 BS O SC 2 G20 | C.43 |
| 0930501222 | KSG M20 BS O NI 2 G20 | C.43 |
| 0930511212 | KSG M25 BS O SC 2 G25 | C.43 |
| 0930511222 | KSG M25 BS O NI 2 G25 | C.43 |
| 0930521212 | KSG M32 BS O SC 2 G32 | C.43 |
| 0930521222 | KSG M32 BS O NI 2 G32 | C.43 |
| 0930531212 | KSG M40 BS O SC 2 G40 | C.43 |
| 0930531222 | KSG M40 BS O NI 2 G40 | C.43 |
| 0930551212 | KSG M50 BS O SC 2 G50 | C.43 |
| 0930640001 | SKMU M16 MS SC | C.49 |
| 0930640002 | SKMU M20 MS SC | C.49 |
| 0930640003 | SKMU M25 MS SC | C.49 |
| 0930640004 | SKMU M32 MS SC | C.49 |
| 0930640005 | SKMU M40 MS SC | C.49 |
| 0930640006 | SKMU M50 MS SC | C.49 |
| 0930640007 | SKMU M63 MS SC | C.49 |
| 0930640008 | SKMU M75 MS SC | C.49 |
| 0930640009 | SKMU M80 MS SC | C.49 |
| 0930640010 | SKMU M85 MS SC | C.49 |
| 0930640011 | SKMU M90 MS SC | C.49 |
| 0930700001 | KSP L24 S | C.58 |
| 0930700002 | KSP L30 S | C.58 |
| 0930700003 | KSP L38 S | C.58 |
| 0930700004 | KSP L46 S | C.58 |
| 0930700005 | KSP L55 S | C.58 |
| 0930700006 | KSP L65 S | C.58 |
| 0930700007 | KSP L80 S | C.58 |
| 0930700008 | KSP L90 S | C.58 |
| 0930710001 | EA-RING MS/M16 SC | C.56 |
| 0930710002 | EA-RING MS/M20 SC | C.56 |
| 0930710003 | EA-RING MS/M25 SC | C.56 |
| 0930710004 | EA-RING MS/M32 SC | C.56 |
| 0930710005 | EA-RING MS/M40 SC | C.56 |
| 0930710006 | EA-RING MS/M50 SC | C.56 |
| 0930710007 | EA-RING MS/M63 SC | C.56 |
| 0930710008 | EA-RING MS/M75 SC | C.56 |
| 0930730002 | KSWN M20 | C.53 |
| 0935110000 | SP M6 10 S2 | B.15 |
| 0935120000 | SP M6 15 S2 | B.15 |
| 0935130000 | SP M6 20 S2 | B.15 |
| 0935140000 | SP M6 30 S2 | B.15 |

| Order No. | Type | Page |
|---|---|---|

## 1000000000

| | | |
|---|---|---|
| 1002690000 | KLIPPON STB 1 SS | B.120 |
| 1002700000 | KLIPPON STB 5 SS | B.126 |
| 1002710000 | KLIPPON STB 4 SS | B.125 |
| 1002720000 | KLIPPON STB 3 SS | B.124 |
| 1002730000 | KLIPPON STB 2.1 SS | B.123 |
| 1002740000 | KLIPPON STB 2 SS | B.122 |
| 1002750000 | KLIPPON STB 1.1 SS | B.121 |
| 1002760000 | KLIPPON STB 6 SS | B.127 |
| 1005190000 | VGM16-MS54ZE BS4-10 | C.13 |
| 1005200000 | VGM16-MS54ZE BS6.5-12.5 | C.13 |
| 1005210000 | VGM20-MS54ZE BS1 | C.13 |
| 1005220000 | VGM20-MS54ZE BS6.5-15 | C.13 |
| 1005230000 | VGM25-MS54ZE BS9-19 | C.13 |
| 1005240000 | VGM32-MS54ZE BS17-27 | C.13 |
| 1009560000 | VG M20-MS54 ZR 4-13 | C.10 |
| 1009570000 | VG M25-MS54 ZR 8.5-18 | C.10 |
| 1009580000 | VG M32-MS54 ZR 16-26 | C.10 |
| 1009590000 | VG M40-MS54 ZR 23-30 | C.10 |
| 1009600000 | VG M50-MS54 ZR 32-40 | C.10 |
| 1009610000 | VGPG13.5-MS54ZR7.5-12.5 | C.10 |
| 1009620000 | VG PG16-MS54 ZR 7.5-15 | C.10 |
| 1009630000 | VG PG21-MS54 ZR 10-19 | C.10 |
| 1009640000 | VG PG29-MS54 ZR 18-27 | C.10 |
| 1009650000 | VG PG36-MS54 ZR 24-33 | C.10 |
| 1009670000 | VG PG42-MS54 ZR 30-39 | C.10 |
| 1009740000 | VG 7-SS 68 KB 3-6.5 | C.17 |
| 1009750000 | VG 9-SS 68 KB 4-8 | C.17 |
| 1009760000 | VG 11-SS 68 KB 5-10 | C.17 |
| 1009780000 | VG 16-SS 68 KB 10-14 | C.17 |
| 1009790000 | VG 21-SS 68 KB 13-18 | C.17 |
| 1009800000 | VG 29-SS 68 KB 18-25 | C.17 |
| 1009810000 | VG 36-SS 68 KB 22-32 | C.17 |
| 1009820000 | VG 42-SS 68 KB 30-38 | C.17 |
| 1009830000 | VG 48-SS 68 KB 34-44 | C.17 |
| 1009840000 | VGM12-SS 68 KB 3-6.5 | C.17 |
| 1009850000 | VGM16-SS 68 KB 4-8 | C.17 |
| 1009860000 | VGM20-SS 68 KB 6-12 | C.17 |
| 1009870000 | VGM25-SS 68 KB 10-14 | C.17 |
| 1009880000 | VGM32-SS 68 KB 13-18 | C.17 |
| 1009890000 | VGM40-SS 68 KB 18-25 | C.17 |
| 1009900000 | VGM50-SS 68 KB 22-32 | C.17 |
| 1009910000 | VGM63-SS 68 KB 34-44 | C.17 |

## 1020000000

| | | |
|---|---|---|
| 1024970000 | KLIPPON STB 1 MS HT | B.120 |
| 1024980000 | KLIPPON STB 1.1 MS HT | B.121 |
| 1024990000 | KLIPPON STB 2 MS HT | B.122 |
| 1025010000 | KLIPPON STB 2.1 MS HT | B.123 |
| 1025020000 | KLIPPON STB 3 MS HT | B.124 |
| 1025030000 | KLIPPON STB 4 MS HT | B.125 |
| 1025040000 | KLIPPON STB 5 MS HT | B.126 |
| 1025050000 | KLIPPON STB 6 MS HT | B.127 |

## 1030000000

| | | |
|---|---|---|
| 1039850000 | CABTITE KEL-DP 24/14 | D.7 |
| 1039870000 | CABTITE KEL-DP 24/17 | D.7 |
| 1039890000 | CABTITE KEL-DP 24/19 | D.7 |
| 1039930000 | CABTITE KEL-DP 24/26 | D.7 |
| 1039940000 | CABTITE KEL-DP 24/48 | D.7 |
| 1039950000 | CABTITE KEL-DP 24/50 | D.7 |
| 1039960000 | CABTITE KZL 140 TS39 | D.9 |
| 1039970000 | CABTITE KZL 80 TS35 | D.9 |
| 1039990000 | CABTITE KZL 39 TS35 | D.9 |

## 1040000000

| | | |
|---|---|---|
| 1040030000 | CABTITE KZL 140 C | D.9 |
| 1040060000 | CABTITE KZL 80 C | D.9 |
| 1040080000 | CABTITE KZL 39 C | D.9 |
| 1040120000 | CABTITE KEL-DP 32/10/2 | D.7 |
| 1040130000 | CABTITE KEL-DP 50/9/2 | D.7 |
| 1040160000 | CABTITE KEL-DP 50/12/2 | D.7 |
| 1040180000 | CABTITE KEL-DP 50/16/2 | D.7 |
| 1040210000 | CABTITE KEL-DP 50/18/2 | D.7 |
| 1040240000 | CABTITE KEL-DP 50/20/2 | D.7 |
| 1040310000 | CABTITE KEL-DP 32/10 | D.7 |
| 1040320000 | CABTITE KEL-DP 50/9 | D.7 |
| 1040330000 | CABTITE KEL-DP 50/12 | D.7 |
| 1040350000 | CABTITE KEL-DP 50/16 | D.7 |
| 1040360000 | CABTITE KEL-DP 50/18 | D.7 |
| 1040370000 | CABTITE KEL-DP 50/20 | D.7 |
| 1048170000 | CABTITE KEL B1 | D.6 |
| 1048180000 | CABTITE KEL B4 | D.6 |
| 1048190000 | CABTITE KEL SNAP B4 | D.6 |

## 1050000000

| | | |
|---|---|---|
| 1058810000 | KLIPPON STB 1 SS E | B.120 |
| 1058820000 | KLIPPON STB 1.1 SS E | B.121 |
| 1058830000 | KLIPPON STB 2 SS E | B.122 |
| 1058840000 | KLIPPON STB 2.1 SS E | B.123 |
| 1058850000 | KLIPPON STB 3 SS E | B.124 |
| 1058860000 | KLIPPON STB 4 SS E | B.125 |
| 1058870000 | KLIPPON STB 6 SS E | B.127 |
| 1058880000 | KLIPPON STB 5 SS E | B.126 |

| Order No. | Type | Page |
|---|---|---|

## 1070000000

| | | |
|---|---|---|
| 1074480000 | KDSW M20 BN O SC 1 G16 | C.34 |
| 1074490000 | KDSW M20BN O SC 2 G16 | C.34 |
| 1074500000 | KDSW M20 BN O SC 1 G20S | C.34 |
| 1074510000 | KDSW M20 BN O SC 2 G20S | C.34 |
| 1074520000 | KDSW M20 BN O SC 1 G20 | C.34 |
| 1074530000 | KDSW M20 BN O SC 2 G20 | C.34 |
| 1074540000 | KDSW M25 BN O SC 1 G25 | C.34 |
| 1074550000 | KDSW M25 BN O SC 2 G25 | C.34 |
| 1074570000 | KDSW M32 BN O SC 1 G32 | C.34 |
| 1074580000 | KDSW M32 BN O SC 2 G32 | C.34 |
| 1074590000 | KDSW M40 BN O SC 1 G40 | C.34 |
| 1074610000 | KDSW M40 BN O SC 2 G40 | C.34 |
| 1074620000 | KDSW M50 BN O SC 1 G50S | C.34 |
| 1074630000 | KDSW M50 BN O SC 2 G50S | C.34 |
| 1074640000 | KDSW M50 BN O SC 1 G50 | C.34 |
| 1074650000 | KDSW M50 BN O SC 2 G50 | C.34 |
| 1074660000 | KDSW M20 BN L NI 1 G16 | C.39 |
| 1074670000 | KDSW M63 BN O SC 1 G63S | C.34 |
| 1074690000 | KDSW M20 BN L NI 2 G16 | C.39 |
| 1074710000 | KDSW M63 BN O SC 2 G63S | C.34 |
| 1074720000 | KDSW M20 BN L NI 1 G20S | C.39 |
| 1074730000 | KDSW M63 BN O SC 1 G63 | C.34 |
| 1074740000 | KDSW M20 BN L NI 2 G20S | C.39 |
| 1074750000 | KDSW M63 BN O SC 2 G63 | C.34 |
| 1074760000 | KDSW M20 BN L NI 1 G20 | C.39 |
| 1074770000 | KDSW M75 BN O SC 1 G75S | C.34 |
| 1074780000 | KDSW M20 BN L NI 2 G20 | C.39 |
| 1074790000 | KDSW M75 BN O SC 2 G75S | C.34 |
| 1074810000 | KDSW M25 BN L NI 1 G25 | C.39 |
| 1074820000 | KDSW M75 BN O SC 1 G75 | C.34 |
| 1074830000 | KDSW M25 BN L NI 2 G25 | C.39 |
| 1074840000 | KDSW M75 BN O SC 2 G75 | C.34 |
| 1074850000 | KDSW M32 BN L NI 1 G32 | C.39 |
| 1074860000 | KDSW M32 BN L NI 2 G32 | C.39 |
| 1074870000 | KDSW M40 BN L NI 1 G40 | C.39 |
| 1074880000 | KDSW M40 BN L NI 2 G40 | C.39 |
| 1074890000 | KDSW M50 BN L NI 1 G50S | C.39 |
| 1074910000 | KDSW M50 BN L NI 2 G50S | C.39 |
| 1074920000 | KDSW M50 BN L NI 1 G50 | C.39 |
| 1074930000 | KDSW M50 BN L NI 2 G50 | C.39 |
| 1074940000 | KDSW M63 BN L NI 1 G63S | C.39 |
| 1074950000 | KDSW M63 BN L NI 2 G63S | C.39 |
| 1074960000 | KDSW M63 BN L NI 1 G63 | C.39 |
| 1074970000 | KDSW M63 BN L NI 2 G63 | C.39 |
| 1074980000 | KDSW M75 BN L NI 1 G75S | C.39 |
| 1074990000 | KDSW M75 BN L NI 2 G75S | C.39 |
| 1075010000 | KDSW M75 BN L NI 1 G75 | C.39 |
| 1075020000 | KDSW M75 BN L NI 2 G75 | C.39 |
| 1075030000 | KDSW M20 BN O NI 1 G16 | C.35 |
| 1075040000 | KDSW M20 BN O NI 2 G16 | C.35 |
| 1075050000 | KDSW M20 BN O NI 1 G20S | C.35 |
| 1075060000 | KDSW M20 BN O NI 2 G20S | C.35 |
| 1075070000 | KDSW M20 BN O NI 1 G20 | C.35 |
| 1075080000 | KDSW M20 BN O NI 2 G20 | C.35 |
| 1075090000 | KDSW M25 BN O NI 1 G25 | C.35 |
| 1075110000 | KDSW M25 BN O NI 2 G25 | C.35 |
| 1075120000 | KDSW M32 BN O NI 1 G32 | C.35 |
| 1075130000 | KDSW M32 BN O NI 2 G32 | C.35 |
| 1075140000 | KDSW M40 BN O NI 1 G40 | C.35 |
| 1075150000 | KDSW M40 BN O NI 2 G40 | C.35 |
| 1075160000 | KDSW M50 BN O NI 1 G50S | C.35 |
| 1075170000 | KDSW M50 BN O NI 2 G50S | C.35 |
| 1075180000 | KDSW M50 BN O NI 1 G50 | C.35 |
| 1075190000 | KDSW M50 BN O NI 2 G50 | C.35 |
| 1075210000 | KDSW M63 BN O NI 1 G63S | C.35 |
| 1075220000 | KDSW M63 BN O NI 2 G63S | C.35 |
| 1075230000 | KDSW M63 BN O NI 1 G63 | C.35 |
| 1075240000 | KDSW M63 BN O NI 2 G63 | C.35 |
| 1075250000 | KDSW M75 BN O NI 1 G75S | C.35 |
| 1075260000 | KDSW M75 BN O NI 2 G75S | C.35 |
| 1075270000 | KDSW M75 BN O NI 1 G75 | C.35 |
| 1075280000 | KDSW M75 BN O NI 2 G75 | C.35 |
| 1075330000 | KSG M75 BN O SC 2 G75S | C.42 |
| 1075340000 | KSG M75 BN O SC 2 G75 | C.42 |
| 1075350000 | KSG M75 BN O NI 2 G75S | C.42 |
| 1075360000 | KSG M75 BN O NI 2 G75 | C.42 |
| 1075370000 | KSPA M63 BNI | C.64 |
| 1075380000 | KSPA M75 BNI | C.64 |
| 1075480000 | KSPM M63 BSC | C.65 |
| 1075490000 | KSPM M75 BSC | C.65 |
| 1075510000 | KSPM M50 SSC | C.65 |
| 1075520000 | KSPM M63 SSC | C.65 |
| 1075530000 | KSPM M75 SSC | C.65 |
| 1076120000 | KDSU M20 BN O SC 1 G16 | C.30 |
| 1076130000 | KDSU M20 BN O SC 1 G20S | C.30 |
| 1076140000 | KDSU M20 BN O SC 1 G20 | C.30 |
| 1076150000 | KDSU M25 BN O SC 1 G25 | C.30 |
| 1076160000 | KDSU M32 BN O SC 1 G32 | C.30 |
| 1076170000 | KDSU M40 BN O SC 1 G40 | C.30 |
| 1076180000 | KDSU M50 BN O SC 1 G50S | C.30 |
| 1076190000 | KDSU M50 BN O SC 1 G50 | C.30 |
| 1076200000 | KDSU M63 BN O SC 1 G63S | C.30 |
| 1076210000 | KDSU M63 BN O SC 1 G63 | C.30 |
| 1076220000 | KDSU M75 BN O SC 1 G75S | C.30 |
| 1076230000 | KDSU M75 BN O SC 2 G75S | C.30 |
| 1076240000 | KDSU M75 BN O SC 1 G75 | C.30 |
| 1076250000 | KDSW M20 BN L SC 1 G16 | C.38 |

| Order No. | Type | Page |
|---|---|---|
| 1076260000 | KDSU M75 BN O SC 2 G75 | C.30 |
| 1076270000 | KDSW M20 BN L SC 2 G16 | C.38 |
| 1076280000 | KDSW M20 BN L SC 1 G20S | C.38 |
| 1076290000 | KDSW M20 BN L SC 2 G20S | C.38 |
| 1076300000 | KDSW M20 BN L SC 1 G20 | C.38 |
| 1076310000 | KDSW M20 BN L SC 2 G20 | C.38 |
| 1076320000 | KDSW M25 BN L SC 1 G25 | C.38 |
| 1076330000 | KDSW M25 BN L SC 2 G25 | C.38 |
| 1076340000 | KDSW M32 BN L SC 1 G32 | C.38 |
| 1076350000 | KDSW M32 BN L SC 2 G32 | C.38 |
| 1076360000 | KDSW M40 BN L SC 1 G40 | C.38 |
| 1076370000 | KDSW M40 BN L SC 2 G40 | C.38 |
| 1076380000 | KDSW M50 BN L SC 1 G50S | C.38 |
| 1076390000 | KDSW M50 BN L SC 2 G50S | C.38 |
| 1076400000 | KDSW M50 BN L SC 1 G50 | C.38 |
| 1076410000 | KDSW M50 BN L SC 2 G50 | C.38 |
| 1076420000 | KDSW M63 BN L SC 1 G63S | C.38 |
| 1076430000 | KDSW M63 BN L SC 2 G63S | C.38 |
| 1076440000 | KDSW M63 BN L SC 1 G63 | C.38 |
| 1076450000 | KDSW M63 BN L SC 2 G63 | C.38 |
| 1076460000 | KDSW M75 BN L SC 1 G75S | C.38 |
| 1076470000 | KDSW M75 BN L SC 2 G75S | C.38 |
| 1076480000 | KDSW M75 BN L SC 1 G75 | C.38 |
| 1076490000 | KDSW M75 BN L SC 2 G75 | C.38 |
| 1076630000 | KSWN M16 | C.53 |
| 1076640000 | KSWN M25 | C.53 |
| 1076650000 | KSWN M32 | C.53 |
| 1076660000 | KSWN M63 | C.53 |
| 1076670000 | KSWN M75 | C.53 |
| 1076680000 | KSWF M16 | C.54 |
| 1076690000 | KSWF M32 | C.54 |
| 1076710000 | KSWF M40 | C.54 |
| 1076720000 | KSWF M50 | C.54 |
| 1076730000 | KSWF M63 | C.54 |
| 1076740000 | KSWF M75 | C.54 |
| 1076750000 | KSP EL46 | C.57 |
| 1076760000 | KSP EL55 | C.57 |
| 1076770000 | KSP EL65 | C.57 |
| 1076780000 | KSP EL80 | C.57 |
| 1076790000 | KSP EL90 | C.57 |

## 1080000000

| | | |
|---|---|---|
| 1083280000 | KDSU M20 BN O NI 1 G16 | C.31 |
| 1083290000 | KDSU M20 BN O NI 1 G20S | C.31 |
| 1083320000 | KDSU M20 BN O NI 1 G20 | C.31 |
| 1083330000 | KDSU M25 BN O NI 1 G25 | C.31 |
| 1083340000 | KDSU M32 BN O NI 1 G32 | C.31 |
| 1083350000 | KDSU M40 BN O NI 1 G40 | C.31 |
| 1083360000 | KDSU M50 BN O NI 1 G50S | C.31 |
| 1083370000 | KDSU M50 BN O NI 1 G50 | C.31 |
| 1083380000 | KDSU M63 BN O NI 1 G63S | C.31 |
| 1083390000 | KDSU M63 BN O NI 1 G63 | C.31 |
| 1083400000 | KDSU M75 BN O NI 1 G75S | C.31 |
| 1083410000 | KDSU M75 BN O NI 2 G75S | C.31 |
| 1083420000 | KDSU M75 BN O NI 1 G75 | C.31 |
| 1083430000 | KDSU M75 BN O NI 2 G75 | C.31 |

## 1090000000

| | | |
|---|---|---|
| 1095100000 | KUB M20 BS O NI 1 G16 | C.45 |
| 1095110000 | KUB M20 BS O NI 2 G16 | C.45 |
| 1095120000 | KUB M20 BS O NI 1 G20S | C.45 |
| 1095130000 | KUB M20 BS O NI 2 G20S | C.45 |
| 1095140000 | KUB M20 BS O NI 1 G20 | C.45 |
| 1095150000 | KUB M20 BS O NI 2 G20 | C.45 |
| 1095160000 | KUB M25 BS O NI 1 G25 | C.45 |
| 1095170000 | KUB M25 BS O NI 2 G25 | C.45 |
| 1095180000 | KUB M32 BS O NI 1 G32 | C.45 |
| 1095190000 | KUB M32 BS O NI 2 G32 | C.45 |
| 1095200000 | KUB M40 BS O NI 1 G40 | C.45 |
| 1095210000 | KUB M40 BS O NI 2 G40 | C.45 |
| 1095220000 | KUB M50 BS O NI 1 G50S | C.45 |
| 1095230000 | KUB M50 BS O NI 2 G50S | C.45 |
| 1095240000 | KUB M50 BS O NI 1 G50 | C.45 |
| 1095250000 | KUB M50 BN O NI 2 G50 | C.45 |
| 1095260000 | KUB M63 BS O NI 1 G63S | C.45 |
| 1095270000 | KUB M63 BS O NI 2 G63S | C.45 |
| 1095280000 | KUB M63 BS O NI 1 G63 | C.45 |
| 1095290000 | KUB M63 BS O NI 2 G63 | C.45 |
| 1095300000 | KUB M75 BS O NI 1 G75S | C.45 |
| 1095310000 | KUB M75 BS O NI 2 G75S | C.45 |
| 1095320000 | KUB M75 BS O NI 1 G75 | C.45 |
| 1095330000 | KUB M75 BS O NI 2 G75 | C.45 |
| 1095340000 | KUB M20 BS O SC 1 G16 | C.44 |
| 1095350000 | KUB M20 BS O SC 2 G16 | C.44 |
| 1095360000 | KUB M20 BS O SC 1 G20S | C.44 |
| 1095370000 | KUB M20 BS O SC 2 G20S | C.44 |
| 1095380000 | KUB M20 BS O SC 1 G20 | C.44 |
| 1095390000 | KUB M20 BS O SC 2 G20 | C.44 |
| 1095400000 | KUB M25 BS O SC 1 G25 | C.44 |
| 1095410000 | KUB M25 BS O SC 2 G25 | C.44 |
| 1095420000 | KUB M32 BS O SC 1 G32 | C.44 |
| 1095430000 | KUB M32 BS O SC 2 G32 | C.44 |
| 1095440000 | KUB M40 BS O SC 1 G40 | C.44 |
| 1095450000 | KUB M40 BS O SC 2 G40 | C.44 |
| 1095460000 | KUB M50 BS O SC 1 G50S | C.44 |
| 1095470000 | KUB M50 BS O SC 2 G50S | C.44 |
| 1095480000 | KUB M50 BS O SC 1 G50 | C.44 |
| 1095490000 | KUB M50 BS O SC 2 G50 | C.44 |
| 1095500000 | KUB M63 BS O SC 1 G63S | C.44 |
| 1095510000 | KUB M63 BS O SC 2 G63S | C.44 |
| 1095520000 | KUB M63 BS O SC 1 G63 | C.44 |
| 1095530000 | KUB M63 BS O SC 2 G63 | C.44 |
| 1095540000 | KUB M75 BS O SC 1 G75S | C.44 |
| 1095550000 | KUB M75 BS O SC 2 G75S | C.44 |
| 1095560000 | KUB M75 BS O SC 1 G75 | C.44 |
| 1095570000 | KUB M75 BS O SC 2 G75 | C.44 |

## 1120000000

| | | |
|---|---|---|
| 1128540000 | SDI Set S2.5-5.5/PZ1/2 | E.16 |

## 1130000000

| | | |
|---|---|---|
| 1135240000 | IE-KOK-V14 | E.6 |
| 1135650000 | KDSX M20 BS O SC 1 G16 | C.40 |
| 1135660000 | KDSX M20 BS O SC 2 G16 | C.40 |
| 1135670000 | KDSX M20 BS O SC 1 G20S | C.40 |
| 1135680000 | KDSX M20 BS O SC 2 G20S | C.40 |
| 1135690000 | KDSX M20 BS O SC 1 G20 | C.40 |
| 1135710000 | KDSX M20 BS O SC 2 G20 | C.40 |
| 1135720000 | KDSX M25 BS O SC 1 G25 | C.40 |
| 1135730000 | KDSX M25 BS O SC 2 G25 | C.40 |
| 1135740000 | KDSX M32 BS O SC 1 G32 | C.40 |
| 1135750000 | KDSX M32 BS O SC 2 G32 | C.40 |
| 1135760000 | KDSX M40 BS O SC 1 G40 | C.40 |
| 1135770000 | KDSX M40 BS O SC 2 G40 | C.40 |
| 1135780000 | KDSX M50 BS O SC 1 G50S | C.40 |
| 1135790000 | KDSX M50 BS O SC 2 G50S | C.40 |
| 1135800000 | KDSX M50 BS O SC 1 G50 | C.40 |
| 1135810000 | KDSX M50 BS O SC 2 G50 | C.40 |
| 1135820000 | KDSX M63 BS O SC 1 G63S | C.40 |
| 1135830000 | KDSX M63 BS O SC 2 G63S | C.40 |
| 1135840000 | KDSX M63 BS O SC 1 G63 | C.40 |
| 1135850000 | KDSX M63 BS O SC 2 G63 | C.40 |
| 1135860000 | KDSX M75 BS O SC 1 G75S | C.40 |
| 1135870000 | KDSX M75 BS O SC 2 G75S | C.40 |
| 1135880000 | KDSX M75 BS O SC 1 G75 | C.40 |
| 1135890000 | KDSX M75 BS O SC 2 G75 | C.40 |
| 1135910000 | KDSX M20 BS O NI 1 G16 | C.41 |
| 1135920000 | KDSX M20 BS O NI 2 G16 | C.41 |
| 1135930000 | KDSX M20 BS O NI 1 G20S | C.41 |
| 1135940000 | KDSX M20 BS O NI 2 G20S | C.41 |
| 1135950000 | KDSX M20 BS O NI 1 G20 | C.41 |
| 1135960000 | KDSX M20 BS O NI 2 G20 | C.41 |
| 1135970000 | KDSX M25 BS O NI 1 G25 | C.41 |
| 1135980000 | KDSX M25 BS O NI 2 G25 | C.41 |
| 1135990000 | KDSX M32 BS O NI 1 G32 | C.41 |
| 1136000000 | KDSX M32 BS O NI 2 G32 | C.41 |
| 1136010000 | KDSX M40 BS O NI 1 G40 | C.41 |
| 1136020000 | KDSX M40 BS O NI 2 G40 | C.41 |
| 1136030000 | KDSX M50 BS O NI 1 G50S | C.41 |
| 1136040000 | KDSX M50 BS O NI 2 G50S | C.41 |
| 1136050000 | KDSX M50 BS O NI 1 G50 | C.41 |
| 1136060000 | KDSX M50 BS O NI 2 G50 | C.41 |
| 1136070000 | KDSX M63 BS O NI 1 G63S | C.41 |
| 1136080000 | KDSX M63 BS O NI 2 G63S | C.41 |
| 1136090000 | KDSX M63 BS O NI 1 G63 | C.41 |
| 1136110000 | KDSX M63 BS O NI 2 G63 | C.41 |
| 1136120000 | KDSX M75 BS O NI 1 G75S | C.41 |
| 1136130000 | KDSX M75 BS O NI 2 G75S | C.41 |
| 1136140000 | KDSX M75 BS O NI 1 G75 | C.41 |
| 1136150000 | KDSX M75 BS O NI 2 G75 | C.41 |
| 1136160000 | KDSW M20 BS O SC 1 G16 | C.36 |
| 1136170000 | KDSW M20 BS O SC 2 G16 | C.36 |
| 1136180000 | KDSW M20 BS O SC 1 G20S | C.36 |
| 1136190000 | KDSW M20 BS O SC 2 G20S | C.36 |
| 1136200000 | KDSW M20 BS O SC 1 G20 | C.36 |
| 1136210000 | KDSW M20 BS O SC 2 G20 | C.36 |
| 1136220000 | KDSW M25 BS O SC 1 G25 | C.36 |
| 1136230000 | KDSW M25 BS O SC 2 G25 | C.36 |
| 1136240000 | KDSW M32 BS O SC 1 G32 | C.36 |
| 1136250000 | KDSW M32 BS O SC 2 G32 | C.36 |
| 1136260000 | KDSW M40 BS O SC 1 G40 | C.36 |
| 1136270000 | KDSW M40 BS O SC 2 G40 | C.36 |
| 1136280000 | KDSW M50 BS O SC 1 G50S | C.36 |
| 1136290000 | KDSW M50 BS O SC 2 G50S | C.36 |
| 1136310000 | KDSW M50 BS O SC 1 G50 | C.36 |
| 1136320000 | KDSW M50 BS O SC 2 G50 | C.36 |
| 1136330000 | KDSW M63 BS O SC 1 G63S | C.36 |
| 1136340000 | KDSW M63 BS O SC 2 G63S | C.36 |
| 1136350000 | KDSW M63 BS O SC 1 G63 | C.36 |
| 1136360000 | KDSW M63 BS O SC 2 G63 | C.36 |
| 1136370000 | KDSW M75 BS O SC 1 G75S | C.36 |
| 1136380000 | KDSW M75 BS O SC 2 G75S | C.36 |
| 1136390000 | KDSW M75 BS O SC 1 G75 | C.36 |
| 1136400000 | KDSW M75 BS O SC 2 G75 | C.36 |
| 1136410000 | KDSW M20 BS O NI 1 G16 | C.37 |
| 1136420000 | KDSW M20 BS O NI 2 G16 | C.37 |
| 1136430000 | KDSW M20 BS O NI 1 G20S | C.37 |
| 1136440000 | KDSW M20 BS O NI 2 G20S | C.37 |
| 1136450000 | KDSW M20 BS O NI 1 G20 | C.37 |
| 1136460000 | KDSW M20 BS O NI 2 G20 | C.37 |
| 1136470000 | KDSW M25 BS O NI 1 G25 | C.37 |
| 1136480000 | KDSW M25 BS O NI 2 G25 | C.37 |
| 1136490000 | KDSW M32 BS O NI 1 G32 | C.37 |
| 1136510000 | KDSW M32 BS O NI 2 G32 | C.37 |
| 1136520000 | KDSW M40 BS O NI 1 G40 | C.37 |
| 1136530000 | KDSW M40 BS O NI 2 G40 | C.37 |
| 1136540000 | KDSW M50 BS O NI 1 G50S | C.37 |
| 1136550000 | KDSW M50 BS O NI 2 G50S | C.37 |
| 1136560000 | KDSW M50 BS O NI 1 G50 | C.37 |
| 1136570000 | KDSW M50 BS O NI 2 G50 | C.37 |
| 1136580000 | KDSW M63 BS O NI 1 G63S | C.37 |
| 1136590000 | KDSW M63 BS O NI 2 G63S | C.37 |
| 1136600000 | KDSW M63 BS O NI 1 G63 | C.37 |
| 1136610000 | KDSW M63 BS O NI 2 G63 | C.37 |
| 1136620000 | KDSW M75 BS O NI 1 G75S | C.37 |
| 1136630000 | KDSW M75 BS O NI 2 G75S | C.37 |
| 1136640000 | KDSW M75 BS O NI 1 G75 | C.37 |
| 1136650000 | KDSW M75 BS O NI 2 G75 | C.37 |
| 1136660000 | KSG M50 BS O NI 2 G50S | C.43 |
| 1136670000 | KSG M50 BS O NI 2 G50 | C.43 |
| 1136680000 | KSG M63 BS O NI 2 G63S | C.43 |
| 1136690000 | KSG M63 BS O NI 2 G63 | C.43 |
| 1136700000 | KSG M75 BS O NI 2 G75S | C.43 |
| 1136710000 | KSG M75 BS O NI 2 G75 | C.43 |
| 1136720000 | KSG M20 BS O SC 2 G20S | C.43 |
| 1136730000 | KSG M50 BS O SC 2 G50S | C.43 |
| 1136740000 | KSG M63 BS O SC 2 G63S | C.43 |
| 1136750000 | KSG M63 BS O SC 2 G63 | C.43 |
| 1136760000 | KSG M75 BS O SC 2 G75S | C.43 |
| 1136770000 | KSG M75 BS O SC 2 G75 | C.43 |
| 1136870000 | KDSU M40 BS O SC 1 G40 | C.32 |
| 1136880000 | KDSU M50 BS O SC 2 G50S | C.32 |
| 1136890000 | KDSU M50 BS O SC 1 G50 | C.32 |
| 1136910000 | KDSU M50 BS O SC 2 G50 | C.32 |
| 1136920000 | KDSU M63 BS O SC 1 G63S | C.32 |
| 1136930000 | KDSU M63 BS O SC 2 G63S | C.32 |
| 1136940000 | KDSU M63 BS O SC 1 G63 | C.32 |
| 1136950000 | KDSU M63 BS O SC 2 G63 | C.32 |
| 1136960000 | KDSU M75 BS O SC 1 G75S | C.32 |
| 1136970000 | KDSU M75 BS O SC 2 G75S | C.32 |
| 1136980000 | KDSU M75 BS O SC 1 G75 | C.32 |
| 1136990000 | KDSU M40 BS O NI 1 G40 | C.33 |
| 1137000000 | KDSU M50 BS O NI 1 G50S | C.33 |
| 1137010000 | KDSU M50 BS O NI 1 G50 | C.33 |
| 1137020000 | KDSU M50 BS O NI 2 G50 | C.33 |
| 1137030000 | KDSU M63 BS O NI 1 G63S | C.33 |
| 1137040000 | KDSU M63 BS O NI 2 G63S | C.33 |
| 1137050000 | KDSU M63 BS O NI 1 G63 | C.33 |
| 1137060000 | KDSU M75 BS O NI 1 G75S | C.33 |
| 1137070000 | KDSU M75 BS O NI 2 G75S | C.33 |
| 1137080000 | KDSU M75 BS O NI 1 G75 | C.33 |
| 1137090000 | KDSU M75 BS O NI 2 G75 | C.33 |

## 1190000000

| | | |
|---|---|---|
| 1191590000 | KTB QLL S2 DB3 | B.93 |
| 1191600000 | KTB QLL S2 SLS | B.93 |
| 1192690000 | PEBZ M10 KTB S4 SET | B.15 |
| 1192790000 | KSP L114 S | C.58 |
| 1192820000 | KSWF M90 | C.54 |
| 1193810000 | KTB MOPL 2215 S2N | B.15 |
| 1193820000 | KTB MOPL 2626 S2N | B.16 |
| 1193830000 | KTB MOPL 3030 S2N | B.18 |
| 1193840000 | KTB MOPL 3526 S2N | B.20 |
| 1193850000 | KTB MOPL 4030 S2N | B.22 |
| 1193860000 | KTB MOPL 4538 S2N | B.24 |
| 1193870000 | KTB MOPL 4848 S2N | B.26 |
| 1193880000 | KTB MOPL 5535 S2N | B.28 |
| 1193890000 | KTB MOPL 6245 S2N | B.30 |
| 1193900000 | KTB MOPL 7650 S2N | B.32 |
| 1193910000 | KTB MOPL 9161 S2N | B.34 |
| 1193920000 | KTB MOPL 9874 S2N | B.36 |
| 1193930000 | KTB MOPL 2215 MSZN | B.15 |
| 1193940000 | KSP L 104 S | C.58 |
| 1193950000 | KTB MOPL 2626 MSZN | B.16 |
| 1193960000 | KTB MOPL 3030 MSZN | B.18 |
| 1193970000 | KTB MOPL 3526 MSZN | B.20 |
| 1193980000 | KTB MOPL 4030 MSZN | B.22 |
| 1193990000 | KTB MOPL 4538 MSZN | B.24 |
| 1194000000 | KTB MOPL 4848 MSZN | B.26 |
| 1194010000 | KTB MOPL 5535 MSZN | B.28 |
| 1194020000 | KTB MOPL 6245 MSZN | B.30 |
| 1194030000 | KTB MOPL 7650 MSZN | B.32 |
| 1194040000 | KTB MOPL 9161 MSZN | B.34 |
| 1194050000 | KTB MOPL 9874 MSZN | B.36 |
| 1194560000 | KTB MH 221513 S4E1 | B.15 |
| 1194570000 | KTB MH 221513 S4E2 | B.15 |
| 1194580000 | KTB MH 221513 S4E3 | B.15 |
| 1194590000 | KTB MH 221513 S4E4 | B.15 |
| 1194610000 | KTB MH 262615 S4E1 | B.16 |
| 1194620000 | KTB MH 262615 S4E2 | B.16 |
| 1194630000 | KTB MH 262615 S4E3 | B.16 |
| 1194640000 | KTB MH 262615 S4E4 | B.16 |
| 1194660000 | KTB MH 262620 S4E1 | B.17 |
| 1194670000 | KTB MH 262620 S4E2 | B.17 |
| 1194680000 | KTB MH 262620 S4E3 | B.17 |
| 1194690000 | KTB MH 262620 S4E4 | B.17 |
| 1194710000 | KTB MH 303015 S4E1 | B.18 |
| 1194720000 | KTB MH 303015 S4E2 | B.18 |
| 1194730000 | KTB MH 303015 S4E3 | B.18 |
| 1194740000 | KTB MH 303015 S4E4 | B.18 |
| 1194760000 | KTB MH 303020 S4E1 | B.19 |
| 1194770000 | KTB MH 303020 S4E2 | B.19 |
| 1194780000 | KTB MH 303020 S4E3 | B.19 |
| 1194790000 | KTB MH 303020 S4E4 | B.19 |
| 1194810000 | KTB MH 352615 S4E1 | B.20 |
| 1194820000 | KTB MH 352615 S4E2 | B.20 |
| 1194830000 | KTB MH 352615 S4E3 | B.20 |
| 1194840000 | KTB MH 352615 S4E4 | B.20 |
| 1194860000 | KTB MH 352620 S4E1 | B.21 |
| 1194870000 | KTB MH 352620 S4E2 | B.21 |
| 1194880000 | KTB MH 352620 S4E3 | B.21 |
| 1194890000 | KTB MH 352620 S4E4 | B.21 |
| 1194910000 | KTB MH 403015 S4E1 | B.22 |
| 1194920000 | KTB MH 403015 S4E2 | B.22 |
| 1194930000 | KTB MH 403015 S4E3 | B.22 |
| 1194940000 | KTB MH 403015 S4E4 | B.22 |
| 1194960000 | KTB MH 403020 S4E1 | B.23 |
| 1194970000 | KTB MH 403020 S4E2 | B.23 |
| 1194980000 | KTB MH 403020 S4E3 | B.23 |
| 1194990000 | KTB MH 403020 S4E4 | B.23 |
| 1195010000 | KTB MH 453815 S4E1 | B.24 |
| 1195020000 | KTB MH 453815 S4E2 | B.24 |
| 1195030000 | KTB MH 453815 S4E3 | B.24 |
| 1195040000 | KTB MH 453815 S4E4 | B.24 |
| 1195060000 | KTB MH 453820 S4E1 | B.25 |
| 1195070000 | KTB MH 453820 S4E2 | B.25 |
| 1195080000 | KTB MH 453820 S4E3 | B.25 |
| 1195090000 | KTB MH 453820 S4E4 | B.25 |
| 1195110000 | KTB MH 484815 S4E1 | B.26 |
| 1195120000 | KTB MH 484815 S4E2 | B.26 |
| 1195130000 | KTB MH 484815 S4E3 | B.26 |
| 1195140000 | KTB MH 484815 S4E4 | B.26 |
| 1195160000 | KTB MH 484820 S4E1 | B.27 |
| 1195170000 | KTB MH 484820 S4E2 | B.27 |
| 1195180000 | KTB MH 484820 S4E3 | B.27 |
| 1195190000 | KTB MH 484820 S4E4 | B.27 |
| 1195210000 | KTB MH 553515 S4E1 | B.28 |
| 1195220000 | KTB MH 553515 S4E2 | B.28 |
| 1195230000 | KTB MH 553515 S4E3 | B.28 |
| 1195240000 | KTB MH 553515 S4E4 | B.28 |
| 1195260000 | KTB MH 553520 S4E1 | B.29 |
| 1195270000 | KTB MH 553520 S4E2 | B.29 |
| 1195280000 | KTB MH 553520 S4E3 | B.29 |
| 1195290000 | KTB MH 553520 S4E4 | B.29 |
| 1195310000 | KTB MH 624515 S4E1 | B.30 |
| 1195320000 | KTB MH 624515 S4E2 | B.30 |
| 1195330000 | KTB MH 624515 S4E3 | B.30 |
| 1195340000 | KTB MH 624515 S4E4 | B.30 |
| 1195360000 | KTB MH 624520 S4E1 | B.31 |
| 1195370000 | KTB MH 624520 S4E2 | B.31 |
| 1195380000 | KTB MH 624520 S4E3 | B.31 |
| 1195390000 | KTB MH 624520 S4E4 | B.31 |
| 1195410000 | KTB MH 765015 S4E1 | B.32 |
| 1195420000 | KTB MH 765015 S4E2 | B.32 |
| 1195430000 | KTB MH 765015 S4E3 | B.32 |
| 1195440000 | KTB MH 765015 S4E4 | B.32 |
| 1195460000 | KTB MH 765020 S4E1 | B.33 |
| 1195470000 | KTB MH 765020 S4E2 | B.33 |
| 1195480000 | KTB MH 765020 S4E3 | B.33 |
| 1195490000 | KTB MH 765020 S4E4 | B.33 |
| 1195510000 | KTB MH 916115 S4E1 | B.34 |
| 1195520000 | KTB MH 916115 S4E2 | B.34 |
| 1195530000 | KTB MH 916115 S4E3 | B.34 |
| 1195540000 | KTB MH 916115 S4E4 | B.34 |
| 1195560000 | KTB MH 916120 S4E1 | B.35 |
| 1195570000 | KTB MH 916120 S4E2 | B.35 |
| 1195580000 | KTB MH 916120 S4E3 | B.35 |
| 1195590000 | KTB MH 916120 S4E4 | B.35 |
| 1195610000 | KTB MH 987420 S4E1 | B.36 |
| 1195620000 | KTB MH 987420 S4E2 | B.36 |
| 1195630000 | KTB MH 987420 S4E3 | B.36 |
| 1195640000 | KTB MH 987420 S4E4 | B.36 |
| 1195660000 | KTB FS 221513 S4E1 | B.67 |
| 1195670000 | KTB FS 221513 S4E2 | B.67 |
| 1195680000 | KTB FS 221513 S4E3 | B.67 |
| 1195690000 | KTB FS 221513 S4E4 | B.67 |
| 1195710000 | KTB FS 262615 S4E1 | B.68 |
| 1195720000 | KTB FS 262615 S4E2 | B.68 |
| 1195730000 | KTB FS 262615 S4E3 | B.68 |
| 1195740000 | KTB FS 262615 S4E4 | B.68 |
| 1195760000 | KTB FS 262620 S4E1 | B.69 |
| 1195770000 | KTB FS 262620 S4E2 | B.69 |
| 1195780000 | KTB FS 262620 S4E3 | B.69 |
| 1195790000 | KTB FS 262620 S4E4 | B.69 |
| 1195810000 | KTB FS 303015 S4E1 | B.70 |
| 1195820000 | KTB FS 303015 S4E2 | B.70 |
| 1195830000 | KTB FS 303015 S4E3 | B.70 |
| 1195840000 | KTB FS 303015 S4E4 | B.70 |
| 1195860000 | KTB FS 303020 S4E1 | B.71 |
| 1195870000 | KTB FS 303020 S4E2 | B.71 |
| 1195880000 | KTB FS 303020 S4E3 | B.71 |
| 1195890000 | KTB FS 303020 S4E4 | B.71 |
| 1195910000 | KTB FS 352615 S4E1 | B.72 |
| 1195920000 | KTB FS 352615 S4E2 | B.72 |
| 1195930000 | KTB FS 352615 S4E3 | B.72 |
| 1195940000 | KTB FS 352615 S4E4 | B.72 |
| 1195960000 | KTB FS 352620 S4E1 | B.73 |
| 1195970000 | KTB FS 352620 S4E2 | B.73 |
| 1195980000 | KTB FS 352620 S4E3 | B.73 |
| 1195990000 | KTB FS 352620 S4E4 | B.73 |
| 1196010000 | KTB FS 403015 S4E1 | B.74 |

| Order No. | Type | Page |
|---|---|---|
| 1196020000 | KTB FS 403015 S4E2 | B.74 |
| 1196030000 | KTB FS 403015 S4E3 | B.74 |
| 1196040000 | KTB FS 403015 S4E4 | B.74 |
| 1196060000 | KTB FS 403020 S4E1 | B.75 |
| 1196070000 | KTB FS 403020 S4E2 | B.75 |
| 1196080000 | KTB FS 403020 S4E3 | B.75 |
| 1196090000 | KTB FS 403020 S4E4 | B.75 |
| 1196110000 | KTB FS 453815 S4E1 | B.76 |
| 1196120000 | KTB FS 453815 S4E2 | B.76 |
| 1196130000 | KTB FS 453815 S4E3 | B.76 |
| 1196140000 | KTB FS 453815 S4E4 | B.76 |
| 1196160000 | KTB FS 453820 S4E1 | B.77 |
| 1196170000 | KTB FS 453820 S4E2 | B.77 |
| 1196180000 | KTB FS 453820 S4E3 | B.77 |
| 1196190000 | KTB FS 453820 S4E4 | B.77 |
| 1196210000 | KTB FS 484815 S4E1 | B.78 |
| 1196220000 | KTB FS 484815 S4E2 | B.78 |
| 1196230000 | KTB FS 484815 S4E3 | B.78 |
| 1196240000 | KTB FS 484815 S4E4 | B.78 |
| 1196260000 | KTB FS 484820 S4E1 | B.79 |
| 1196270000 | KTB FS 484820 S4E2 | B.79 |
| 1196280000 | KTB FS 484820 S4E3 | B.79 |
| 1196290000 | KTB FS 484820 S4E4 | B.79 |
| 1196310000 | KTB FS 553515 S4E1 | B.80 |
| 1196320000 | KTB FS 553515 S4E2 | B.80 |
| 1196330000 | KTB FS 553515 S4E3 | B.80 |
| 1196340000 | KTB FS 553515 S4E4 | B.80 |
| 1196360000 | KTB FS 553520 S4E1 | B.81 |
| 1196370000 | KTB FS 553520 S4E2 | B.81 |
| 1196380000 | KTB FS 553520 S4E3 | B.81 |
| 1196390000 | KTB FS 553520 S4E4 | B.81 |
| 1196410000 | KTB FS 624515 S4E1 | B.82 |
| 1196420000 | KTB FS 624515 S4E2 | B.82 |
| 1196430000 | KTB FS 624515 S4E3 | B.82 |
| 1196440000 | KTB FS 624515 S4E4 | B.82 |
| 1196460000 | KTB FS 624520 S4E1 | B.83 |
| 1196470000 | KTB FS 624520 S4E2 | B.83 |
| 1196480000 | KTB FS 624520 S4E3 | B.83 |
| 1196490000 | KTB FS 624520 S4E4 | B.83 |
| 1196510000 | KTB FS 765015 S4E1 | B.84 |
| 1196520000 | KTB FS 765015 S4E2 | B.84 |
| 1196530000 | KTB FS 765015 S4E3 | B.84 |
| 1196540000 | KTB FS 765015 S4E4 | B.84 |
| 1196560000 | KTB FS 765020 S4E1 | B.85 |
| 1196570000 | KTB FS 765020 S4E2 | B.85 |
| 1196580000 | KTB FS 765020 S4E3 | B.85 |
| 1196590000 | KTB FS 765020 S4E4 | B.85 |
| 1196610000 | KTB FS 916115 S4E1 | B.86 |
| 1196620000 | KTB FS 916115 S4E2 | B.86 |
| 1196630000 | KTB FS 916115 S4E3 | B.86 |
| 1196640000 | KTB FS 916115 S4E4 | B.86 |
| 1196660000 | KTB FS 916120 S4E1 | B.87 |
| 1196670000 | KTB FS 916120 S4E2 | B.87 |
| 1196680000 | KTB FS 916120 S4E3 | B.87 |
| 1196690000 | KTB FS 916120 S4E4 | B.87 |
| 1196710000 | KTB FS 987420 S4E1 | B.88 |
| 1196720000 | KTB FS 987420 S4E2 | B.88 |
| 1196730000 | KTB FS 987420 S4E3 | B.88 |
| 1196740000 | KTB FS 987420 S4E4 | B.88 |
| 1197200000 | KTBI FS 302015 S2E0 | B.107 |
| 1197210000 | KTBI FS 302015 S2E1 | B.107 |
| 1197220000 | KTBI FS 303015 S2E0 | B.108 |
| 1197230000 | KTBI FS 303015 S2E1 | B.108 |
| 1197240000 | KTBI FS 303022 S2E0 | B.109 |
| 1197250000 | KTBI FS 303022 S2E1 | B.109 |
| 1197260000 | KTBI FS 403015 S2E0 | B.110 |
| 1197270000 | KTBI FS 403015 S2E1 | B.110 |
| 1197280000 | KTBI FS 403022 S2E0 | B.111 |
| 1197290000 | KTBI FS 403022 S2E1 | B.111 |
| 1197300000 | KTBI FS 404022 S2E0 | B.112 |
| 1197310000 | KTBI FS 404022 S2E1 | B.112 |
| 1197320000 | KTBI FS 504022 S2E0 | B.113 |
| 1197330000 | KTBI FS 504022 S2E1 | B.113 |
| 1197340000 | KTBI FS 505022 S2E0 | B.114 |
| 1197350000 | KTBI FS 505022 S2E1 | B.114 |
| 1197360000 | KTBI FS 604022 S2E0 | B.115 |
| 1197370000 | KTBI FS 604022 S2E1 | B.115 |
| 1197380000 | KTBI FS 606022 S2E0 | B.116 |
| 1197390000 | KTBI FS 606022 S2E1 | B.116 |
| 1197400000 | KTBI FS 806022 S2E0 | B.117 |
| 1197410000 | KTBI FS 806022 S2E1 | B.117 |
| 1197430000 | KTBI QL 302015 S2E0 | B.93 |
| 1197440000 | KTBI QL 302015 S2E1 | B.93 |
| 1197450000 | KTBI QL 303015 S2E0 | B.94 |
| 1197460000 | KTBI QL 303015 S2E1 | B.94 |
| 1197470000 | KTBI QL 303022 S2E0 | B.95 |
| 1197480000 | KTBI QL 303022 S2E1 | B.95 |
| 1197490000 | KTBI QL 403015 S2E0 | B.96 |
| 1197500000 | KTBI QL 403015 S2E1 | B.96 |
| 1197510000 | KTBI QL 403022 S2E0 | B.97 |
| 1197520000 | KTBI QL 403022 S2E1 | B.97 |
| 1197530000 | KTBI QL 404022 S2E0 | B.98 |
| 1197540000 | KTBI QL 404022 S2E1 | B.98 |
| 1197550000 | KTBI QL 504022 S2E0 | B.99 |
| 1197560000 | KTBI QL 504022 S2E1 | B.99 |
| 1197570000 | KTBI QL 505022 S2E0 | B.100 |
| 1197580000 | KTBI QL 505022 S2E1 | B.100 |
| 1197590000 | KTBI QL 604022 S2E0 | B.101 |
| 1197600000 | KTBI QL 604022 S2E1 | B.101 |

| Order No. | Type | Page |
|---|---|---|
| 1197610000 | KTBI QL 606022 S2E0 | B.102 |
| 1197620000 | KTBI QL 606022 S2E1 | B.102 |
| 1197630000 | KTBI QL 806022 S2E0 | B.103 |
| 1197640000 | KTBI QL 806022 S2E1 | B.103 |
| 1199860000 | KTB QL 221513 S4E1 | B.41 |
| 1199870000 | KTB QL 221513 S4E2 | B.41 |
| 1199880000 | KTB QL 221513 S4E3 | B.41 |
| 1199890000 | KTB QL 221513 S4E4 | B.41 |
| 1199910000 | KTB QL 262615 S4E1 | B.42 |
| 1199920000 | KTB QL 262615 S4E2 | B.42 |
| 1199930000 | KTB QL 262615 S4E3 | B.42 |
| 1199940000 | KTB QL 262615 S4E4 | B.42 |
| 1199960000 | KTB QL 262620 S4E1 | B.43 |
| 1199970000 | KTB QL 262620 S4E2 | B.43 |
| 1199980000 | KTB QL 262620 S4E3 | B.43 |
| 1199990000 | KTB QL 262620 S4E4 | B.43 |

## 1200000000

| | | |
|---|---|---|
| 1200020000 | KTB QL 303015 S4E1 | B.44 |
| 1200030000 | KTB QL 303015 S4E2 | B.44 |
| 1200040000 | KTB QL 303015 S4E3 | B.44 |
| 1200050000 | KTB QL 303015 S4E4 | B.44 |
| 1200070000 | KTB QL 303020 S4E1 | B.45 |
| 1200080000 | KTB QL 303020 S4E2 | B.45 |
| 1200090000 | KTB QL 303020 S4E3 | B.45 |
| 1200100000 | KTB QL 303020 S4E4 | B.45 |
| 1200120000 | KTB QL 352615 S4E1 | B.46 |
| 1200130000 | KTB QL 352615 S4E2 | B.46 |
| 1200140000 | KTB QL 352615 S4E3 | B.46 |
| 1200150000 | KTB QL 352615 S4E4 | B.46 |
| 1200170000 | KTB QL 352620 S4E1 | B.47 |
| 1200180000 | KTB QL 352620 S4E2 | B.47 |
| 1200190000 | KTB QL 352620 S4E3 | B.47 |
| 1200210000 | KTB QL 352620 S4E4 | B.47 |
| 1200230000 | KTB QL 403015 S4E1 | B.48 |
| 1200240000 | KTB QL 403015 S4E2 | B.48 |
| 1200250000 | KTB QL 403015 S4E3 | B.48 |
| 1200260000 | KTB QL 403015 S4E4 | B.48 |
| 1200280000 | KTB QL 403020 S4E1 | B.49 |
| 1200290000 | KTB QL 403020 S4E2 | B.49 |
| 1200310000 | KTB QL 403020 S4E3 | B.49 |
| 1200320000 | KTB QL 403020 S4E4 | B.49 |
| 1200340000 | KTB QL 453815 S4E1 | B.50 |
| 1200350000 | KTB QL 453815 S4E2 | B.50 |
| 1200360000 | KTB QL 453815 S4E3 | B.50 |
| 1200370000 | KTB QL 453815 S4E4 | B.50 |
| 1200390000 | KTB QL 453820 S4E1 | B.51 |
| 1200410000 | KTB QL 453820 S4E2 | B.51 |
| 1200420000 | KTB QL 453820 S4E3 | B.51 |
| 1200430000 | KTB QL 453820 S4E4 | B.51 |
| 1200450000 | KTB QL 484815 S4E1 | B.52 |
| 1200460000 | KTB QL 484815 S4E2 | B.52 |
| 1200470000 | KTB QL 484815 S4E3 | B.52 |
| 1200480000 | KTB QL 484815 S4E4 | B.52 |
| 1200510000 | KTB QL 484820 S4E1 | B.53 |
| 1200520000 | KTB QL 484820 S4E2 | B.53 |
| 1200530000 | KTB QL 484820 S4E3 | B.53 |
| 1200540000 | KTB QL 484820 S4E4 | B.53 |
| 1200560000 | KTB QL 553515 S4E1 | B.54 |
| 1200570000 | KTB QL 553515 S4E2 | B.54 |
| 1200580000 | KTB QL 553515 S4E3 | B.54 |
| 1200590000 | KTB QL 553515 S4E4 | B.54 |
| 1200620000 | KTB QL 553520 S4E1 | B.55 |
| 1200630000 | KTB QL 553520 S4E2 | B.55 |
| 1200640000 | KTB QL 553520 S4E3 | B.55 |
| 1200650000 | KTB QL 553520 S4E4 | B.55 |
| 1200670000 | KTB QL 624515 S4E1 | B.56 |
| 1200680000 | KTB QL 624515 S4E2 | B.56 |
| 1200690000 | KTB QL 624515 S4E3 | B.56 |
| 1200710000 | KTB QL 624515 S4E4 | B.56 |
| 1200730000 | KTB QL 624520 S4E1 | B.57 |
| 1200740000 | KTB QL 624520 S4E2 | B.57 |
| 1200750000 | KTB QL 624520 S4E3 | B.57 |
| 1200760000 | KTB QL 624520 S4E4 | B.57 |
| 1200780000 | KTB QL 765015 S4E1 | B.58 |
| 1200790000 | KTB QL 765015 S4E2 | B.58 |
| 1200810000 | KTB QL 765015 S4E3 | B.58 |
| 1200820000 | KTB QL 765015 S4E4 | B.58 |
| 1200840000 | KTB QL 765020 S4E1 | B.59 |
| 1200850000 | KTB QL 765020 S4E2 | B.59 |
| 1200860000 | KTB QL 765020 S4E3 | B.59 |
| 1200870000 | KTB QL 765020 S4E4 | B.59 |
| 1200890000 | KTB QL 916115 S4E1 | B.60 |
| 1200910000 | KTB QL 916115 S4E2 | B.60 |
| 1200920000 | KTB QL 916115 S4E3 | B.60 |
| 1200930000 | KTB QL 916115 S4E4 | B.60 |
| 1200950000 | KTB QL 916120 S4E1 | B.61 |
| 1200960000 | KTB QL 916120 S4E2 | B.61 |
| 1200970000 | KTB QL 916120 S4E3 | B.61 |
| 1200980000 | KTB QL 916120 S4E4 | B.61 |
| 1201010000 | KTB QL 987420 S4E1 | B.62 |
| 1201020000 | KTB QL 987420 S4E2 | B.62 |
| 1201030000 | KTB QL 987420 S4E3 | B.62 |
| 1201040000 | KTB QL 987420 S4E4 | B.62 |
| 1209890000 | KSPM M16 PL | C.66 |
| 1209910000 | KSPM M20 PL | C.66 |
| 1209920000 | KSPM M25 PL | C.66 |
| 1209930000 | KSPM M32 PL | C.66 |

| Order No. | Type | Page |
|---|---|---|
| 1209940000 | KSPM M40 PL | C.66 |
| 1209950000 | KSPM M50 PL | C.66 |

## 1210000000

| | | |
|---|---|---|
| 1210890000 | VP M16 EXE MS | C.63 |
| 1210900000 | VP M20 EXE MS | C.63 |
| 1210910000 | VP M25 EXE MS | C.63 |
| 1210920000 | VP M32 EXE MS | C.63 |
| 1210930000 | VP M40 EXE MS | C.63 |
| 1210940000 | VP M50 EXE MS | C.63 |
| 1210950000 | VP M63 EXE MS | C.63 |

## 1250000000

| | | |
|---|---|---|
| 1252190000 | TPSD FIXING SET KTB | B.15 |
| 1252730000 | DOHA KTB A4 S2 R | B.26 |
| 1252750000 | DOHA KTB A5 S2 R | B.24 |
| 1252780000 | DOHA KTB A6 S2 R | B.16 |
| 1253230000 | DESC M6X14 KTB SET | B.15 |
| 1256270000 | KTB GP 221513 AB S4 6MM | B.15 |
| 1256280000 | KTB GP 221513 CD S4 6MM | B.15 |
| 1256290000 | KTB GP 262615 AB S4 6MM | B.16 |
| 1256310000 | KTB GP 262615 CD S4 6MM | B.16 |
| 1256320000 | KTB GP 262620 AB S4 6MM | B.17 |
| 1256330000 | KTB GP 262620 CD S4 6MM | B.17 |
| 1256340000 | KTB GP 303015 AB S4 6MM | B.18 |
| 1256350000 | KTB GP 303015 CD S4 6MM | B.18 |
| 1256360000 | KTB GP 303020 AB S4 6MM | B.19 |
| 1256370000 | KTB GP 303020 CD S4 6MM | B.19 |
| 1256380000 | KTB GP 352615 AB S4 6MM | B.20 |
| 1256390000 | KTB GP 352615 CD S4 6MM | B.20 |
| 1256410000 | KTB GP 352620 AB S4 6MM | B.21 |
| 1256420000 | KTB GP 352620 CD S4 6MM | B.21 |
| 1256430000 | KTB GP 403015 AB S4 6MM | B.22 |
| 1256440000 | KTB GP 403015 CD S4 6MM | B.22 |
| 1256450000 | KTB GP 403020 AB S4 6MM | B.23 |
| 1256470000 | KTB GP 403020 CD S4 6MM | B.23 |
| 1256480000 | KTB GP 453815 AB S4 6MM | B.24 |
| 1256490000 | KTB GP 453815 CD S4 6MM | B.24 |
| 1256510000 | KTB GP 453820 AB S4 6MM | B.25 |
| 1256520000 | KTB GP 453820 CD S4 6MM | B.25 |
| 1256530000 | KTB GP 484815 AB S4 6MM | B.26 |
| 1256540000 | KTB GP 484815 CD S4 6MM | B.26 |
| 1256550000 | KTB GP 484820 AB S4 6MM | B.27 |
| 1256560000 | KTB GP 484820 CD S4 6MM | B.27 |
| 1256570000 | KTB GP 553515 AB S4 6MM | B.28 |
| 1256580000 | KTB GP 553515 CD S4 6MM | B.28 |
| 1256590000 | KTB GP 553520 AB S4 6MM | B.29 |
| 1256610000 | KTB GP 553520 CD S4 6MM | B.29 |
| 1256620000 | KTB GP 624515 AB S4 6MM | B.30 |
| 1256630000 | KTB GP 624515 CD S4 6MM | B.30 |
| 1256640000 | KTB GP 624520 AB S4 6MM | B.31 |
| 1256650000 | KTB GP 624520 CD S4 6MM | B.31 |
| 1256660000 | KTB GP 765015 AB S4 6MM | B.32 |
| 1256670000 | KTB GP 765015 CD S4 6MM | B.32 |
| 1256680000 | KTB GP 765020 AB S4 6MM | B.33 |
| 1256690000 | KTB GP 765020 CD S4 6MM | B.33 |
| 1256710000 | KTB GP 916115 AB S4 6MM | B.34 |
| 1256720000 | KTB GP 916115 CD S4 6MM | B.34 |
| 1256730000 | KTB GP 916120 AB S4 6MM | B.35 |
| 1256740000 | KTB GP 916120 CD S4 6MM | B.35 |
| 1256750000 | KTB GP 987420 AB S4 6MM | B.36 |
| 1256760000 | KTB GP 987420 CD S4 6MM | B.36 |
| 1257640000 | TPSDHA KTB 100X25 S2 2R | B.15 |
| 1257650000 | KTB MOPL 2215 S2N H | B.15 |
| 1257660000 | KTB MOPL 2626 S2N H | B.16 |
| 1257670000 | KTB MOPL 3030 S2N H | B.18 |
| 1257680000 | KTB MOPL 3526 S2N H | B.20 |
| 1257690000 | KTB MOPL 4030 S2N H | B.22 |
| 1257700000 | KTB MOPL 4538 S2N H | B.24 |
| 1257710000 | KTB MOPL 4848 S2N H | B.26 |
| 1257720000 | KTB MOPL 5535 S2N H | B.28 |
| 1257740000 | KTB MOPL 6245 S2N H | B.30 |
| 1257750000 | KTB MOPL 7650 S2N H | B.32 |
| 1257760000 | KTB MOPL 9161 S2N H | B.34 |
| 1257770000 | KTB MOPL 9874 S2N H | B.36 |

## 1270000000

| | | |
|---|---|---|
| 1274150000 | GFSC M5x10 TX20 SET | B.15 |
| 1277200000 | Klippon POK 1 | B.166 |
| 1277300000 | Klippon POK 2 | B.167 |
| 1277400000 | Klippon POK 3 | B.168 |
| 1277500000 | Klippon POK 4 | B.171 |
| 1277600000 | Klippon POK 5 | B.172 |
| 1277700000 | Klippon POK 6 | B.174 |
| 1277800000 | Klippon POK 7 | B.175 |
| 1279320000 | TPSDHA KTB 70X70M3 S2 R | B.15 |

## 1280000000

| | | |
|---|---|---|
| 1281360000 | KTB RNHD 221513 R | B.15 |
| 1281360000 | KTB RNHD 221513 R | B.41 |
| 1281370000 | KTB RNHD 262615 R | B.16 |
| 1281370000 | KTB RNHD 262615 R | B.42 |
| 1281380000 | KTB RNHD 262620 R | B.17 |
| 1281380000 | KTB RNHD 262620 R | B.43 |
| 1281390000 | KTB RNHD 303015 R | B.18 |

| Order No. | Type | Page |
|---|---|---|
| 1281390000 | KTB RNHD 303015 R | B.44 |
| 1281400000 | KTB RNHD 303020 R | B.19 |
| 1281400000 | KTB RNHD 303020 R | B.45 |
| 1281410000 | KTB RNHD 352615 R | B.20 |
| 1281410000 | KTB RNHD 352615 R | B.46 |
| 1281420000 | KTB RNHD 352620 R | B.21 |
| 1281420000 | KTB RNHD 352620 R | B.47 |
| 1281430000 | KTB RNHD 403015 R | B.22 |
| 1281430000 | KTB RNHD 403015 R | B.48 |
| 1281440000 | KTB RNHD 403020 R | B.23 |
| 1281440000 | KTB RNHD 403020 R | B.49 |
| 1281450000 | KTB RNHD 453815 R | B.24 |
| 1281450000 | KTB RNHD 453815 R | B.50 |
| 1281460000 | KTB RNHD 453820 R | B.25 |
| 1281460000 | KTB RNHD 453820 R | B.51 |
| 1281470000 | KTB RNHD 484815 R | B.26 |
| 1281470000 | KTB RNHD 484815 R | B.52 |
| 1281480000 | KTB RNHD 484820 R | B.27 |
| 1281480000 | KTB RNHD 484820 R | B.53 |
| 1281490000 | KTB RNHD 553515 R | B.28 |
| 1281490000 | KTB RNHD 553515 R | B.54 |
| 1281500000 | KTB RNHD 553520 R | B.29 |
| 1281500000 | KTB RNHD 553520 R | B.55 |
| 1281510000 | KTB RNHD 624515 R | B.30 |
| 1281510000 | KTB RNHD 624515 R | B.56 |
| 1281520000 | KTB RNHD 624520 R | B.31 |
| 1281520000 | KTB RNHD 624520 R | B.57 |
| 1281530000 | KTB RNHD 765015 R | B.32 |
| 1281530000 | KTB RNHD 765015 R | B.58 |
| 1281540000 | KTB RNHD 765020 R | B.33 |
| 1281540000 | KTB RNHD 765020 R | B.59 |
| 1281550000 | KTB RNHD 916115 R | B.34 |
| 1281550000 | KTB RNHD 916115 R | B.60 |
| 1281570000 | KTB RNHD 916120 R | B.35 |
| 1281570000 | KTB RNHD 916120 R | B.61 |
| 1281580000 | KTB RNHD 987420 R | B.36 |
| 1281580000 | KTB RNHD 987420 R | B.62 |
| 1283450000 | TPSDHA KTB 130X50 S2 R | B.15 |
| 1285200000 | SD FIXING SET | B.15 |
| 1289180000 | KTBI MF S2 SET | B.93 |

## 1290000000

| | | |
|---|---|---|
| 1292530000 | KLIPPON BDX M20 S | C.73 |
| 1292540000 | KLIPPON BDX M20 B | C.73 |

## 1300000000

| | | |
|---|---|---|
| 1309690000 | KTBI MOPL 3020 MSZN | B.93 |
| 1309690000 | KTBI MOPL 3020 MSZN | B.107 |
| 1309700000 | KTBI MOPL 3020 S2N | B.93 |
| 1309700000 | KTBI MOPL 3020 S2N | B.107 |

## 1310000000

| | | |
|---|---|---|
| 1310320000 | KTBI MOPL 3030 S2N | B.94 |
| 1310320000 | KTBI MOPL 3030 S2N | B.95 |
| 1310320000 | KTBI MOPL 3030 S2N | B.108 |
| 1310320000 | KTBI MOPL 3030 S2N | B.109 |
| 1310330000 | KTBI MOPL 4030 S2N | B.96 |
| 1310330000 | KTBI MOPL 4030 S2N | B.97 |
| 1310330000 | KTBI MOPL 4030 S2N | B.110 |
| 1310330000 | KTBI MOPL 4030 S2N | B.111 |
| 1310340000 | KTBI MOPL 4040 S2N | B.98 |
| 1310340000 | KTBI MOPL 4040 S2N | B.112 |
| 1310350000 | KTBI MOPL 5040 S2N | B.99 |
| 1310350000 | KTBI MOPL 5040 S2N | B.113 |
| 1310360000 | KTBI MOPL 5050 S2N | B.100 |
| 1310360000 | KTBI MOPL 5050 S2N | B.114 |
| 1310370000 | KTBI MOPL 6040 S2N | B.101 |
| 1310370000 | KTBI MOPL 6040 S2N | B.115 |
| 1310380000 | KTBI MOPL 6060 S2N | B.102 |
| 1310380000 | KTBI MOPL 6060 S2N | B.116 |
| 1310390000 | KTBI MOPL 8060 S2N | B.103 |
| 1310390000 | KTBI MOPL 8060 S2N | B.117 |
| 1310410000 | KTBI MOPL 3030 MSZN | B.94 |
| 1310420000 | KTBI MOPL 4030 MSZN | B.96 |
| 1310430000 | KTBI MOPL 4040 MSZN | B.98 |
| 1310430000 | KTBI MOPL 4040 MSZN | B.112 |
| 1310440000 | KTBI MOPL 5040 MSZN | B.99 |
| 1310440000 | KTBI MOPL 5040 MSZN | B.113 |
| 1310450000 | KTBI MOPL 5050 MSZN | B.100 |
| 1310450000 | KTBI MOPL 5050 MSZN | B.114 |
| 1310460000 | KTBI MOPL 6040 MSZN | B.101 |
| 1310460000 | KTBI MOPL 6040 MSZN | B.115 |
| 1310470000 | KTBI MOPL 6060 MSZN | B.102 |
| 1310470000 | KTBI MOPL 6060 MSZN | B.116 |
| 1310480000 | KTBI MOPL 8060 MSZN | B.103 |
| 1310480000 | KTBI MOPL 8060 MSZN | B.117 |
| 1318130000 | WK IK SL/PH1 | E.12 |
| 1318140000 | WK IK SL/PH2 | E.12 |
| 1318330000 | SDI SL/PH 1 | E.15 |
| 1318340000 | SDI SL/PH 2 | E.15 |
| 1318390000 | SDQ T15 | E.22 |
| 1318400000 | SDQ T20 | E.22 |
| 1318410000 | SDQ T40 | E.22 |

| Order No. | Type | Page |
|---|---|---|

## 1320000000

| | | |
|---|---|---|
| 1323880000 | SD TO 0,6X3,0 | E.18 |

## 1340000000

| | | |
|---|---|---|
| 1344630000 | KLIPPON BDX M20X15 S | C.73 |

## 1390000000

| | | |
|---|---|---|
| 1390910000 | KLIPPON COPL 080806 | B.166 |
| 1390920000 | KLIPPON COPL 081106 | B.167 |
| 1390930000 | KLIPPON COPL 081606 | B.168 |
| 1390940000 | KLIPPON COPL 081906 | B.169 |
| 1390950000 | KLIPPON COPL 082306 | B.170 |
| 1390970000 | KLIPPON COPL 121209 | B.171 |
| 1390980000 | KLIPPON COPL 122209 | B.172 |
| 1390990000 | KLIPPON COPL 161609 | B.173 |
| 1391000000 | KLIPPON COPL 162609 | B.174 |
| 1391010000 | KLIPPON COPL 163609 | B.175 |
| 1391020000 | KLIPPON COPL 165609 | B.176 |
| 1391030000 | KLIPPON COPL 252512/16 | B.177 |
| 1391030000 | KLIPPON COPL 252512/16 | B.181 |
| 1391040000 | KLIPPON COPL 254012/16 | B.178 |
| 1391040000 | KLIPPON COPL 254012/16 | B.182 |
| 1391050000 | KLIPPON COPL 256012 | B.179 |
| 1391070000 | KLIPPON COPL 404012 | B.180 |

## 1560000000

| | | |
|---|---|---|
| 1565240000 | KLIPPON K01 | B.131 |
| 1565240000 | KLIPPON K01 | B.150 |
| 1565250000 | KLIPPON K02 | B.132 |
| 1565260000 | KLIPPON K32 | B.139 |
| 1565270000 | KLIPPON K41 | B.141 |
| 1565270000 | KLIPPON K41 | B.150 |
| 1565280000 | KLIPPON K51 | B.143 |
| 1565290000 | KLIPPON K52 | B.144 |
| 1565290000 | KLIPPON K52 | B.150 |
| 1565400000 | Klippon POK31 | B.169 |
| 1565410000 | Klippon POK 51 | B.173 |
| 1565410000 | Klippon POK 51 | B.184 |
| 1565420000 | Klippon POK 8 | B.177 |
| 1565430000 | Klippon POK 9 | B.178 |
| 1565440000 | Klippon POK 10 | B.180 |
| 1568970000 | VG 7-K68 | C.7 |
| 1568980000 | VG 9-K68 | C.7 |
| 1568990000 | VG 11-K68 | C.7 |
| 1569000000 | VG 13,5-K68 | C.7 |
| 1569010000 | VG 16-K68 | C.7 |
| 1569020000 | VG 21-K68 | C.7 |
| 1569030000 | VG 29-K68 | C.7 |
| 1569040000 | VG 36-K68 | C.7 |
| 1569050000 | VG 42-K68 | C.7 |
| 1569060000 | VG 7-MS68 | C.11 |
| 1569070000 | VG 9-MS68 | C.11 |
| 1569080000 | VG 11-MS68 | C.11 |
| 1569090000 | VG 13,5-MS68 | C.11 |
| 1569100000 | VG 16-MS68 | C.11 |
| 1569110000 | VG 21-MS68 | C.11 |
| 1569120000 | VG 29-MS68 | C.11 |
| 1569130000 | VG 36-MS68 | C.11 |
| 1569140000 | VG 42-MS68 | C.11 |

## 1580000000

| | | |
|---|---|---|
| 1580360000 | HG K+POK | B.134 |

## 1650000000

| | | |
|---|---|---|
| 1656390000 | KV 11-M | C.14 |
| 1656400000 | KV 13-M | C.14 |
| 1656410000 | KV 16-M | C.14 |
| 1656420000 | KV 21-M | C.14 |
| 1656430000 | KV 29-M | C.14 |

## 1690000000

| | | |
|---|---|---|
| 1694070000 | SKMU PG7-MS | C.48 |
| 1694080000 | SKMU PG9-MS | C.48 |
| 1694090000 | SKMU PG11-MS | C.48 |
| 1694100000 | SKMU PG13,5-MS | C.48 |
| 1694110000 | SKMU PG16-MS | C.48 |
| 1697440000 | SKMU PG7-K GR | C.46 |
| 1697450000 | SKMU PG9-K GR | C.46 |
| 1697460000 | SKMU PG11-K GR | C.46 |
| 1697470000 | SKMU PG 13,5-K GR | C.46 |
| 1697480000 | SKMU PG16-K GR | C.46 |
| 1698220000 | SKMU PG21-K GR | C.46 |
| 1698230000 | SKMU PG29-K GR | C.46 |
| 1698240000 | SKMU PG36-K GR | C.46 |
| 1698250000 | SKMU PG42-K GR | C.46 |

## 1700000000

| | | |
|---|---|---|
| 1706860000 | VG EMV PG 9/11 | C.15 |
| 1706870000 | VG EMV PG 11 | C.15 |
| 1706880000 | VG EMV PG 13,5 | C.15 |
| 1706890000 | VG EMV PG 16 K14 | C.15 |
| 1706900000 | VG EMV PG 21 K18 | C.15 |
| 1706910000 | VG EMV PG 29 K26 | C.15 |
| 1706920000 | VG EMV M18X1,5 | C.15 |
| 1706930000 | VG EMV M24X1,5 | C.15 |
| 1706940000 | VG EMV M20X1,5 | C.15 |
| 1706950000 | VG EMV M25X1,5 | C.15 |

## 1710000000

| | | |
|---|---|---|
| 1713870000 | VG EMV PG 7/9 | C.15 |
| 1713880000 | VG EMV PG 16 K18 | C.15 |
| 1713890000 | VG EMV PG K28 | C.15 |
| 1713900000 | VG EMV PG 29 K29 | C.15 |
| 1718770000 | VG 48-K68 | C.7 |
| 1718780000 | VG 48-MS54 | C.9 |
| 1718790000 | VG 48-MS68 | C.11 |
| 1718800000 | VG 7-MS54-ZE | C.12 |
| 1718810000 | VG 9-MS54-ZE | C.12 |
| 1718820000 | VG 11-MS54-ZE | C.12 |
| 1718830000 | VG 13,5-MS54-ZE | C.12 |
| 1718840000 | VG 16-MS54-ZE | C.12 |
| 1718850000 | VG 21-MS54-ZE | C.12 |
| 1718860000 | VG 29-MS54-ZE | C.12 |
| 1718870000 | VG 36-MS54-ZE | C.12 |
| 1718880000 | VG 42-MS54-ZE | C.12 |
| 1718890000 | VG 48-MS54-ZE | C.12 |
| 1718900000 | SKMU EMV PG7 | C.50 |
| 1718910000 | SKMU EMV PG9 | C.50 |
| 1718920000 | SKMU EMV PG11 | C.50 |
| 1718930000 | SKMU EMV PG13,5 | C.50 |
| 1718940000 | SKMU EMV PG16 | C.50 |
| 1718950000 | SKMU EMV PG21 | C.50 |
| 1718960000 | SKMU EMV PG29 | C.50 |
| 1719090000 | SKMU PG48-K GR | C.46 |
| 1719100000 | SKMU PG7-K SW | C.47 |
| 1719110000 | SKMU PG9-K SW | C.47 |
| 1719120000 | SKMU PG11-K SW | C.47 |
| 1719130000 | SKMU PG13,5-K SW | C.47 |
| 1719140000 | SKMU PG16-K SW | C.47 |
| 1719150000 | SKMU PG21-K SW | C.47 |
| 1719160000 | SKMU PG29-K SW | C.47 |
| 1719170000 | SKMU PG36-K SW | C.47 |
| 1719180000 | SKMU PG42-K SW | C.47 |
| 1719190000 | SKMU PG48-K SW | C.47 |
| 1719200000 | SKMU PG21-MS | C.48 |
| 1719210000 | SKMU PG29-MS | C.48 |
| 1719220000 | SKMU PG36-MS | C.48 |
| 1719230000 | SKMU PG42-MS | C.48 |
| 1719240000 | SKMU PG48-MS | C.48 |
| 1719250000 | VP 7-K54 | C.60 |
| 1719260000 | VP 48-K54 | C.60 |
| 1719270000 | VP 48-MS65 | C.61 |
| 1719440000 | GWDR PG7-PO | C.51 |
| 1719450000 | GWDR PG9-PO | C.51 |
| 1719460000 | GWDR PG11-PO | C.51 |
| 1719470000 | GWDR PG13,5-PO | C.51 |
| 1719480000 | GWDR PG16-PO | C.51 |
| 1719490000 | GWDR PG21-PO | C.51 |
| 1719500000 | GWDR PG29-PO | C.51 |
| 1719510000 | GWDR PG36-PO | C.51 |
| 1719520000 | GWDR PG42-PO | C.51 |
| 1719530000 | GWDR PG48-PO | C.51 |
| 1719540000 | GWDR PG7-NP | C.52 |
| 1719550000 | GWDR PG9-NP | C.52 |
| 1719560000 | GWDR PG11-NP | C.52 |
| 1719570000 | GWDR PG13,5-NP | C.52 |
| 1719580000 | GWDR PG16-NP | C.52 |
| 1719590000 | GWDR PG21-NP | C.52 |
| 1719600000 | GWDR PG29-NP | C.52 |
| 1719610000 | GWDR PG36-NP | C.52 |
| 1719620000 | GWDR PG42-NP | C.52 |
| 1719630000 | GWDR PG48-NP | C.52 |
| 1719740000 | EWS M 25X1,5 | C.72 |

## 1720000000

| | | |
|---|---|---|
| 1720480000 | VG 9-K68 SKS | C.8 |
| 1720490000 | VG 11-K68 SKS | C.8 |
| 1720500000 | VG 13.5-K68 SKS | C.8 |
| 1720510000 | VG 16-K68 SKS | C.8 |
| 1720520000 | VG 21-K68 SKS | C.8 |

## 1730000000

| | | |
|---|---|---|
| 1736230000 | GWDR M16-NP | C.52 |
| 1736240000 | GWDR M20-NP | C.52 |
| 1736250000 | GWDR M25-NP | C.52 |
| 1736260000 | GWDR M32-NP | C.52 |
| 1736270000 | GWDR M40-NP | C.52 |
| 1736280000 | GWDR M50-NP | C.52 |
| 1736290000 | GWDR M63-NP | C.52 |
| 1736300000 | SZS M16 | C.59 |
| 1736310000 | SZS M20 | C.59 |
| 1736320000 | SZS M25 | C.59 |
| 1736330000 | SZS M32 | C.59 |
| 1736340000 | SZS M40 | C.59 |
| 1736350000 | SZS M50 | C.59 |
| 1736360000 | SZS M63 | C.59 |
| 1736480000 | EA-RING MS/M 16 | C.55 |
| 1736490000 | EA-RING MS/M 20 | C.55 |
| 1736500000 | EA-RING MS/M 25 | C.55 |
| 1736510000 | EA-RING MS/M 32 | C.55 |
| 1736520000 | EA-RING MS/M 40 | C.55 |
| 1736530000 | EA-RING MS/M 50 | C.55 |
| 1736540000 | EA-RING MS/M 63 | C.55 |
| 1736550000 | EA-RING MS/M 75 | C.55 |
| 1736570000 | KSP L24 | C.57 |
| 1736580000 | KSP L30 | C.57 |
| 1736590000 | KSP L38 | C.57 |
| 1736600000 | KSP L46 | C.57 |
| 1736610000 | KSP L55 | C.57 |
| 1736620000 | KSP L65 | C.57 |
| 1736630000 | KSP L80 | C.57 |
| 1736640000 | KSP L90 | C.57 |
| 1736670000 | KSP EL30 | C.57 |
| 1736680000 | KSP EL38 | C.57 |
| 1736920000 | SKMU M16 K SW | C.47 |
| 1736930000 | SKMU M20 K SW | C.47 |
| 1736940000 | SKMU M25 K SW | C.47 |
| 1736950000 | SKMU M32 K SW | C.47 |
| 1736960000 | SKMU M40 K SW | C.47 |
| 1736970000 | SKMU M50 K SW | C.47 |
| 1736980000 | SKMU M63 K SW | C.47 |
| 1736990000 | SKMU M16 MS | C.48 |
| 1737000000 | SKMU M20 MS | C.48 |
| 1737010000 | SKMU M25 MS | C.48 |
| 1737020000 | SKMU M32 MS | C.48 |
| 1737030000 | SKMU M40 MS | C.48 |
| 1737040000 | SKMU M50 MS | C.48 |
| 1737050000 | SKMU M63 MS | C.48 |
| 1737060000 | SKMU M75 MS | C.48 |
| 1737070000 | VP M16-EXE SW | C.62 |
| 1737080000 | VP M20-EXE SW | C.62 |
| 1737090000 | VP M25-EXE SW | C.62 |
| 1737100000 | VP M32-EXE SW | C.62 |
| 1737110000 | VP M40-EXE SW | C.62 |
| 1737120000 | VP M50-EXE SW | C.62 |
| 1737130000 | VP M63-EXE SW | C.62 |
| 1737140000 | VP M16-EXE MS | B.152 |
| 1737150000 | VP M20-EXE MS | B.153 |
| 1737420000 | ADAP EX 3NPT-M16 | C.67 |
| 1737430000 | ADAP EX 2 1/2NPT-M16 | C.67 |
| 1737440000 | ADAP EX 2NPT-M16 | C.67 |
| 1737490000 | ADAP EX 1/2NPT-M16 | C.67 |
| 1737500000 | ADAP EX M75-M16 | C.68 |
| 1737510000 | ADAP EX M63-M16 | C.68 |
| 1737520000 | ADAP EX M50-M16 | C.68 |
| 1737530000 | ADAP EX M40-M16 | C.68 |
| 1737540000 | ADAP EX M32-M16 | C.68 |
| 1737550000 | ADAP EX M25-M16 | C.68 |
| 1737560000 | ADAP EX M20-M16 | B.154 |
| 1737580000 | ADAP EX 3NPT-M20 | C.67 |
| 1737590000 | ADAP EX 2 1/2NPT-M20 | C.67 |
| 1737600000 | ADAP EX 2NPT-M20 | C.67 |
| 1737630000 | ADAP EX 1NPT-M20 | C.67 |
| 1737640000 | ADAP EX 3/4NPT-M20 | C.67 |
| 1737650000 | ADAP EX 1/2NPT-M20 | C.67 |
| 1737660000 | ADAP EX M75-M20 | C.68 |
| 1737670000 | ADAP EX M63-M20 | C.68 |
| 1737680000 | ADAP EX M50-M20 | C.68 |
| 1737690000 | ADAP EX M40-M20 | C.68 |
| 1737700000 | ADAP EX M32-M20 | C.68 |
| 1737710000 | ADAP EX M25-M20 | C.68 |
| 1737720000 | ADAP EX M20-M20 | C.68 |
| 1737730000 | ADAP EX M16-M20 | C.68 |
| 1737740000 | ADAP EX 3NPT-M25 | C.67 |
| 1737750000 | ADAP EX 2 1/2NPT-M25 | C.67 |
| 1737760000 | ADAP EX 2NPT-M25 | C.67 |
| 1737790000 | ADAP EX 1NPT-M25 | C.67 |
| 1737800000 | ADAP EX 3/4NPT-M25 | C.67 |
| 1737810000 | ADAP EX 1/2NPT-M25 | C.67 |
| 1737820000 | ADAP EX M75-M25 | C.68 |
| 1737830000 | ADAP EX M63-M25 | C.68 |
| 1737840000 | ADAP EX M50-M25 | C.68 |
| 1737850000 | ADAP EX M40-M25 | C.68 |
| 1737860000 | ADAP EX M32-M25 | C.68 |
| 1737880000 | ADAP EX M20-M25 | C.68 |
| 1737890000 | ADAP EX 3NPT-M32 | C.67 |
| 1737900000 | ADAP EX 2 1/2NPT-M32 | C.67 |
| 1737910000 | ADAP EX 2NPT-M32 | C.67 |
| 1737950000 | ADAP EX 3/4NPT-M32 | C.67 |
| 1737960000 | ADAP EX M75-M32 | C.68 |
| 1737970000 | ADAP EX M63-M32 | C.68 |
| 1737980000 | ADAP EX M50-M32 | C.68 |
| 1737990000 | ADAP EX M40-M32 | C.68 |
| 1738010000 | ADAP EX M25-M32 | C.68 |
| 1738020000 | ADAP EX 3NPT-M40 | C.67 |
| 1738030000 | ADAP EX 2 1/2NPT-M40 | C.67 |
| 1738040000 | ADAP EX 2NPT-M40 | C.67 |
| 1738070000 | ADAP EX 1NPT-M40 | C.67 |
| 1738080000 | ADAP EX M75-M40 | C.68 |
| 1738090000 | ADAP EX M63-M40 | C.68 |
| 1738100000 | ADAP EX M50-M40 | C.68 |
| 1738110000 | ADAP EX M40-M40 | C.68 |
| 1738120000 | ADAP EX M32-M40 | C.68 |
| 1738130000 | ADAP EX 3NPT-M50 | C.67 |
| 1738140000 | ADAP EX 2 1/2NPT-M50 | C.67 |
| 1738150000 | ADAP EX 2NPT-M50 | C.67 |
| 1738180000 | ADAP EX M75-M50 | C.68 |
| 1738190000 | ADAP EX M63-M50 | C.68 |
| 1738210000 | ADAP EX M40-M50 | C.68 |
| 1738220000 | ADAP EX 3NPT-M63 | C.67 |
| 1738230000 | ADAP EX 2 1/2NPT-M63 | C.67 |
| 1738240000 | ADAP EX 2NPT-M63 | C.67 |
| 1738260000 | ADAP EX M75-M63 | C.68 |
| 1738280000 | ADAP EX M50-M63 | C.68 |
| 1738290000 | ADAP EX 3NPT-M75 | C.67 |
| 1738300000 | ADAP EX 2 1/2NPT-M75 | C.67 |
| 1738310000 | ADAP EX 2NPT-M75 | C.67 |
| 1738330000 | ADAP EX M63-M75 | C.68 |
| 1738340000 | ADAP EX 3NPT-1/2NPT | C.67 |
| 1738350000 | ADAP EX 2 1/2NPT-1/2 | C.67 |
| 1738360000 | ADAP EX 2NPT-1/2NPT | C.67 |
| 1738370000 | ADAP EX 1 1/2NPT-1/2NPT | C.67 |
| 1738380000 | ADAP EX 1 1/4NPT-1/2NPT | C.67 |
| 1738390000 | ADAP EX 1NPT-1/2NPT | C.67 |
| 1738400000 | ADAP EX 3/4NPT-1/2NPT | C.67 |
| 1738410000 | ADAPAP EX 1/2NPT-1/2NPT | C.67 |
| 1738420000 | ADAP EX M75-1/2NPT | C.68 |
| 1738430000 | ADAP EX M63-1/2NPT | C.68 |
| 1738440000 | ADAP EX M50-1/2NPT | C.68 |
| 1738450000 | ADAP EX M40-1/2NPT | C.68 |
| 1738460000 | ADAP EX M32-1/2NPT | C.68 |
| 1738480000 | ADAP EX M20-1/2NPT | C.68 |
| 1738500000 | ADAP EX 3NPT-3/4NPT | C.67 |
| 1738510000 | ADAP EX 2 1/2NPT-3/4NPT | C.67 |
| 1738520000 | ADAP EX 2NPT-3/4NPT | C.67 |
| 1738530000 | ADAP EX 1 1/2NPT-3/4NPT | C.67 |
| 1738540000 | ADAP EX 1 1/4NPT-3/4NPT | C.67 |
| 1738550000 | ADAP EX 1NPT-3/4NPT | C.67 |
| 1738560000 | ADAP EX 3/4NPT-3/4NPT | C.67 |
| 1738570000 | ADAP EX 1/2NPT-3/4NPT | C.67 |
| 1738580000 | ADAP EX M75-3/4NPT | C.68 |
| 1738590000 | ADAP EX M63-3/4NPT | C.68 |
| 1738600000 | ADAP EX M50-3/4NPT | C.68 |
| 1738610000 | ADAP EX M40-3/4NPT | C.68 |
| 1738630000 | ADAP EX M25-3/4NPT | C.68 |
| 1738640000 | ADAP EX M20-3/4NPT | C.68 |
| 1738650000 | ADAP EX 3NPT-1NPT | C.67 |
| 1738660000 | ADAP EX 2 1/2NPT-1NPT | C.67 |
| 1738670000 | ADAP EX 2NPT-1NPT | C.67 |
| 1738680000 | ADAP EX 1 1/2NPT-1NPT | C.67 |
| 1738690000 | ADAP EX 1 1/4NPT-1NPT | C.67 |
| 1738700000 | ADAP EX 1NPT-1NPT | C.67 |
| 1738710000 | ADAP EX M75-1NPT | C.68 |
| 1738720000 | ADAP EX M63-1NPT | C.68 |
| 1738730000 | ADAP EX M50-1NPT | C.68 |
| 1738740000 | ADAP EX M40-1NPT | C.68 |
| 1738750000 | ADAP EX M32-1NPT | C.68 |
| 1738760000 | ADAP EX M25-1NPT | C.68 |
| 1738770000 | ADAP EX 3NPT-1 1/4NPT | C.67 |
| 1738780000 | ADAP EX 2 1/2NPT-1 1/4 | C.67 |
| 1738790000 | ADAP EX 2NPT-1 1/4NPT | C.67 |
| 1738800000 | ADAP EX 1 1/2NPT-1 1/4 | C.67 |
| 1738810000 | ADAP EX 1 1/4-1 1/4NPT | C.67 |
| 1738820000 | ADAP EX 1NPT-1 1/4NPT | C.67 |
| 1738830000 | ADAP EX M75-1 1/4NPT | C.68 |
| 1738840000 | ADAP EX M63-1 1/4NPT | C.68 |
| 1738850000 | ADAP EX M50-1 1/4NPT | C.68 |
| 1738870000 | ADAP EX M32-1 1/4NPT | C.68 |
| 1738880000 | ADAP EX 3NPT-1 1/2NPT | C.67 |
| 1738890000 | ADAP EX 2 1/2NPT-1 1/2 | C.67 |
| 1738900000 | ADAP EX 2NPT-1 1/2NPT | C.67 |
| 1738910000 | ADAP EX 1 1/2-1 1/2NPT | C.67 |
| 1738920000 | ADAP EX 1 1/4NPT-1 1/2 | C.67 |
| 1738930000 | ADAP EX M75-1 1/2NPT | C.68 |
| 1738940000 | ADAP EX M63-1 1/2NPT | C.68 |
| 1738970000 | ADAP EX 3NPT-2NPT | C.67 |
| 1738980000 | ADAP EX 2 1/2NPT-2NPT | C.67 |
| 1738990000 | ADAP EX 2NPT-2NPT | C.67 |
| 1739010000 | ADAP EX M75-2NPT | C.68 |
| 1739040000 | ADAP EX 3NPT-2 1/2NPT | C.67 |
| 1739050000 | ADAP EX 2 1/2-2 1/2NPT | C.67 |
| 1739060000 | ADAP EX 2NPT-2 1/2NPT | C.67 |
| 1739070000 | ADAP EX M75-2 1/2NPT | C.68 |
| 1739080000 | ADAP EX M63-2 1/2NPT | C.68 |
| 1739090000 | ADAP EX 3NPT-3NPT | C.67 |
| 1739100000 | ADAP EX 2 1/2NPT-3NPT | C.67 |
| 1739110000 | ADAP EX M75-3NPT | C.68 |

## 1770000000

| | | |
|---|---|---|
| 1770410000 | VG EMV PG36 K32-27 | C.15 |
| 1772200000 | VG M12 - MS 68 | C.11 |
| 1772210000 | VG M16 - MS 68 | C.11 |
| 1772220000 | VG M20 - MS 68 | C.11 |
| 1772230000 | VG M25 - MS 68 | C.11 |
| 1772240000 | VG M32 - MS 68 | C.11 |
| 1772250000 | VG M40 - MS 68 | C.11 |
| 1772260000 | VG M50 - MS 68 | C.11 |
| 1772270000 | VG M63 - MS 68 | C.11 |
| 1772280000 | VG M12-1/K68 | C.7 |
| 1772290000 | VG M16 - K 68 | C.7 |
| 1772300000 | VG M20-1/K68 | C.7 |
| 1772310000 | VG M25 - K 68 | C.7 |
| 1772320000 | VG M32 - K 68 | C.7 |
| 1772330000 | VG M40 - K 68 | C.7 |

| Order No. | Type | Page |
|---|---|---|
| 1772340000 | VG M50 - K 68 | C.7 |
| 1772350000 | VG M63-1/K68 | C.7 |
| 1772360000 | SKMU M12 - MS | C.48 |
| 1772440000 | SKMU M12 - K GR | C.46 |
| 1772450000 | SKMU M16 - K GR | C.46 |
| 1772460000 | SKMU M20 - K GR | C.46 |
| 1772470000 | SKMU M25 - K GR | C.46 |
| 1772480000 | SKMU M32 - K GR | C.46 |
| 1772490000 | SKMU M40 - K GR | C.46 |
| 1772500000 | SKMU M50 - K GR | C.46 |
| 1772510000 | SKMU M63 - K GR | C.46 |
| 1776700000 | VG M12-K68 SKS | C.8 |
| 1776710000 | VG M16-K68 SKS | C.8 |
| 1776720000 | VG M20-K68 SKS 10-14 | C.8 |
| 1776730000 | VG M25-K68 SKS | C.8 |
| 1776900000 | VP M25 K54 | C.60 |
| 1776910000 | VP M20 K54 | C.60 |
| 1776920000 | VP M16 K54 | C.60 |
| 1776930000 | VP M12 K54 | C.60 |
| 1776940000 | VP M32 K54 | C.60 |
| 1776950000 | VP M40 K54 | C.60 |
| 1776960000 | VP M50 K54 | C.60 |
| 1776970000 | VP M63 K54 | C.60 |
| 1777610000 | SKMU EMV M12 | C.50 |
| 1777620000 | SKMU EMV M16 | C.50 |
| 1777630000 | SKMU EMV M20 | C.50 |
| 1777640000 | SKMU EMV M25 | C.50 |
| 1777650000 | SKMU EMV M32 | C.50 |
| 1777660000 | SKMU EMV M40 | C.50 |
| 1777670000 | SKMU EMV M50 | C.50 |
| 1777680000 | SKMU EMV M63 | C.50 |
| 1777690000 | SKMU EMV PG 48 | C.50 |
| 1777700000 | SKMU EMV PG 42 | C.50 |
| 1777710000 | SKMU EMV PG 36 | C.50 |
| 1777720000 | VP M12-MS65 | C.61 |
| 1777730000 | VP M16-MS65 | C.61 |
| 1777740000 | VP M20-MS65 | C.61 |
| 1777750000 | VP M25-MS65 | C.61 |
| 1777760000 | VP M32-MS65 | C.61 |
| 1777770000 | VP M40-MS65 | C.61 |
| 1777780000 | VP M50-MS65 | C.61 |
| 1777790000 | VP M63-MS65 | C.61 |
| 1777920000 | GWDR M12-P0 | C.51 |
| 1777930000 | GWDR M16-P0 | C.51 |
| 1777940000 | GWDR M20-P0 | C.51 |
| 1777950000 | GWDR M25-P0 | C.51 |
| 1777960000 | GWDR M32-P0 | C.51 |
| 1777970000 | GWDR M40-P0 | C.51 |
| 1777980000 | GWDR M50-P0 | C.51 |
| 1777990000 | GWDR M63-P0 | C.51 |
| 1778300000 | VGM63-MS54 | C.9 |
| 1778310000 | VGM50-MS54 KB 39,0-41,0 | C.9 |
| 1778320000 | VGM50-MS54 KB 31,0-33,0 | C.9 |
| 1778330000 | VGM40-MS54 | C.9 |
| 1778340000 | VGM32-MS54 | C.9 |
| 1778350000 | VGM25-MS54 KB 15,0-17,0 | C.9 |
| 1778360000 | VGM25-MS54 KB 12,0-14,0 | C.9 |
| 1778370000 | VGM20-MS54 KB 10,0-12,0 | C.9 |
| 1778380000 | VGM20-MS54 KB 8,0-10,0 | C.9 |
| 1778390000 | VGM16-MS54 | C.9 |
| 1778400000 | VGM12-MS54 KB 6,0-8,0 | C.9 |
| 1778410000 | VGM12-MS54 KB 5,0-7,0 | C.9 |
| 1778420000 | VGM12-MS54 ZE 5,0-7,0 | C.12 |
| 1778440000 | VGM16-MS54 ZE | C.12 |
| 1778450000 | VGM20-MS54 ZE | C.12 |
| 1778460000 | VGM20-MS54 ZE 6,0-13,5 | C.12 |
| 1778480000 | VGM25-MS54 ZE | C.12 |
| 1778490000 | VGM32-MS54 ZE | C.12 |
| 1778500000 | VGM40-MS54 ZE | C.12 |
| 1778520000 | VGM50-MS54 ZE | C.12 |
| 1778530000 | VGM63-MS54 ZE | C.12 |
| 1778860000 | VG M20-K68 SKS 6-12 | C.8 |

## 1800000000

| | | |
|---|---|---|
| 1806540000 | SKMU M12-K SW | C.47 |
| 1806630000 | IS 2 KG | E.22 |
| 1806650000 | IS 3 KG | E.22 |
| 1806660000 | IS 4 KG | E.22 |

## 1820000000

| | | |
|---|---|---|
| 1825750000 | CABTITE KEL 16/4 EMV | D.8 |
| 1825760000 | CABTITE KEL 24/5 EMV | D.8 |
| 1825860000 | CABTITE KEL 16/2 | D.5 |
| 1825900000 | CABTITE KEL 16/4 | D.5 |
| 1825910000 | CABTITE KEL 16/8 | D.5 |
| 1825930000 | CABTITE KEL 24/4 | D.5 |
| 1825940000 | CABTITE KEL 24/5 | D.5 |
| 1825950000 | CABTITE KT 16 | D.3 |
| 1826300000 | CABTITE KT 17 | D.3 |
| 1826310000 | CABTITE KT 18 | D.3 |
| 1826320000 | CABTITE KT 19 | D.3 |
| 1826330000 | CABTITE KT 20 | D.3 |
| 1826340000 | CABTITE KT 21 | D.3 |
| 1826350000 | CABTITE KT 22 | D.3 |
| 1826360000 | CABTITE KT 23 | D.3 |
| 1826370000 | CABTITE KT 24 | D.3 |
| 1826380000 | CABTITE KT 25 | D.3 |

| Order No. | Type | Page |
|---|---|---|
| 1826390000 | CABTITE KT 26 | D.3 |
| 1826400000 | CABTITE KT 27 | D.3 |
| 1826410000 | CABTITE KT 28 | D.3 |
| 1826420000 | CABTITE KT 29 | D.3 |
| 1826430000 | CABTITE KT 30 | D.3 |
| 1826440000 | CABTITE KT 32 | D.3 |
| 1826450000 | CABTITE KT 34 | D.3 |
| 1826460000 | CABTITE KT 3 | D.3 |
| 1826470000 | CABTITE KT 4 | D.3 |
| 1826480000 | CABTITE KT 5 | D.3 |
| 1826490000 | CABTITE KT 6 | D.3 |
| 1826500000 | CABTITE KT 7 | D.3 |
| 1826510000 | CABTITE KT 8 | D.3 |
| 1826520000 | CABTITE KT 9 | D.3 |
| 1826530000 | CABTITE KT 10 | D.3 |
| 1826540000 | CABTITE KT 11 | D.3 |
| 1826550000 | CABTITE KT 12 | D.3 |
| 1826560000 | CABTITE KT 13 | D.3 |
| 1826570000 | CABTITE KT 14 | D.3 |
| 1826580000 | CABTITE KT 15 | D.3 |
| 1826590000 | CABTITE KTs 16 | D.3 |
| 1826600000 | CABTITE KTs 17 | D.3 |
| 1826610000 | CABTITE KT ASI | D.3 |
| 1826620000 | CABTITE KT 2/4 | D.3 |
| 1826630000 | CABTITE KT 2/5 | D.3 |
| 1826640000 | CABTITE KT 2/6 | D.3 |
| 1826650000 | CABTITE KT 4/5 | D.3 |
| 1826660000 | CABTITE KV T 25 | D.10 |
| 1826670000 | CABTITE KV T 32 | D.10 |
| 1827760000 | CABTITE KEL 24/10 | D.5 |
| 1827770000 | CABTITE KEL SNAP 16 | D.5 |
| 1827780000 | CABTITE KEL SNAP 24 | D.5 |
| 1827790000 | CABTITE KT 3 b | D.3 |
| 1827800000 | CABTITE KT 4 b | D.3 |
| 1827810000 | CABTITE KT 5 b | D.3 |
| 1827830000 | CABTITE KT 6 b | D.3 |
| 1827840000 | CABTITE KT 7 b | D.3 |
| 1827850000 | CABTITE KT 8 b | D.3 |
| 1827860000 | CABTITE KT 9 b | D.3 |
| 1827870000 | CABTITE KT 10 b | D.3 |
| 1827880000 | CABTITE KT 11 b | D.3 |
| 1827890000 | CABTITE KT 12 b | D.3 |
| 1827900000 | CABTITE KT 13 b | D.3 |
| 1827910000 | CABTITE KT 14 b | D.3 |
| 1827920000 | CABTITE KT 15 b | D.3 |
| 1827930000 | CABTITE KTs 16 b | D.3 |
| 1827940000 | CABTITE KTs 17 b | D.3 |
| 1827950000 | CABTITE KT 16 b | D.3 |
| 1827960000 | CABTITE KT 17 b | D.3 |
| 1827970000 | CABTITE KT 18 b | D.3 |
| 1827980000 | CABTITE KT 19 b | D.3 |
| 1827990000 | CABTITE KT 20 b | D.3 |
| 1828000000 | CABTITE KT 21 b | D.3 |
| 1828010000 | CABTITE KT 22 b | D.3 |
| 1828020000 | CABTITE KT 23 b | D.3 |
| 1828030000 | CABTITE KT 24 b | D.3 |
| 1828040000 | CABTITE KT 25 b | D.3 |
| 1828050000 | CABTITE KT 26 b | D.3 |
| 1828060000 | CABTITE KT 27 b | D.3 |
| 1828070000 | CABTITE KT 28 b | D.3 |
| 1828080000 | CABTITE KT 29 b | D.3 |
| 1828090000 | CABTITE KT 30 b | D.3 |
| 1828100000 | CABTITE KT 32 b | D.3 |
| 1828110000 | CABTITE KT 34 b | D.3 |
| 1828120000 | CABTITE KT ASI b | D.3 |
| 1828130000 | CABTITE KT 2/4 b | D.3 |
| 1828140000 | CABTITE KT 2/5 b | D.3 |
| 1828150000 | CABTITE KT 2/6 b | D.3 |
| 1828160000 | CABTITE KT 4/5 b | D.3 |
| 1828170000 | CABTITE KT BTK | D.3 |
| 1828180000 | CABTITE KT BTG | D.3 |
| 1828190000 | CABTITE KT ATG | D.3 |
| 1828200000 | CABTITE KT BTK b | D.3 |
| 1828210000 | CABTITE KT BTG b | D.3 |
| 1828220000 | CABTITE KT ATG b | D.3 |
| 1828230000 | CABTITE KV T 63-4 | D.10 |
| 1828240000 | CABTITE KV T 63-1 | D.10 |
| 1828250000 | CABTITE SUBD9 | D.10 |

## 1840000000

| | | |
|---|---|---|
| 1849760000 | CABTITE KEL 24/7 | D.5 |
| 1849770000 | CABTITE KEL 16/5 | D.5 |
| 1849780000 | Cabtite Sample Kit | D.2 |

## 1860000000

| | | |
|---|---|---|
| 1868550000 | DAE M12 SS | C.70 |
| 1868560000 | DAE M12 PA short | C.69 |
| 1868570000 | DAE M12 PA long | C.69 |

## 1890000000

| | | |
|---|---|---|
| 1898210000 | MOPL K3 N FE | B.137 |
| 1899630000 | MOPL K3 NT FE | B.137 |

## 1900000000

| | | |
|---|---|---|
| 1905270000 | MOPL K2 N FE | B.135 |

| Order No. | Type | Page |
|---|---|---|
| 1905280000 | MOPL K1 N FE | B.133 |
| 1909260000 | KDSU M20 BN O SC 2 G16 | C.30 |
| 1909290000 | KDSU M20 BN O SC 2 G20S | C.30 |
| 1909300000 | KDSU M20 BN O SC 2 G20 | C.30 |
| 1909310000 | KDSU M25 BN O SC 2 G25 | C.30 |
| 1909320000 | KDSU M32 BN O SC 2 G32 | C.30 |
| 1909330000 | KDSU M40 BN O SC 2 G40 | C.30 |
| 1909340000 | KDSU M50 BN O SC 2 G50S | C.30 |
| 1909350000 | KDSU M50 BN O SC 2 G50 | C.30 |
| 1909360000 | KDSU M63 BN O SC 2 G63S | C.30 |
| 1909370000 | KDSU M63 BN O SC 2 G63 | C.30 |
| 1909380000 | KSG M20 BN O SC 2 G16 | C.42 |
| 1909400000 | KSG M20 BN O SC 2 G20S | C.42 |
| 1909410000 | KSG M20 BN O SC 2 G20 | C.42 |
| 1909420000 | KSG M25 BN O SC 2 G25 | C.42 |
| 1909430000 | KSG M32 BN O SC 2 G32 | C.42 |
| 1909440000 | KSG M40 BN O SC 2 G40 | C.42 |
| 1909450000 | KSG M50 BN O SC 2 G50S | C.42 |
| 1909460000 | KSG M50 BN O SC 2 G50 | C.42 |
| 1909470000 | KSG M63 BN O SC 2 G63S | C.42 |
| 1909480000 | KSG M63 BN O SC 2 G63 | C.42 |
| 1909490000 | VG M12 - MS 1/EMV | C.16 |
| 1909500000 | VG M16 - MS 1/EMV | C.16 |
| 1909510000 | VG M20 - MS 1/EMV | C.16 |
| 1909520000 | VG M25 - MS 1/EMV | C.16 |
| 1909530000 | VG M32 - MS 1/EMV | C.16 |
| 1909540000 | VG M40 - MS 1/EMV | C.16 |
| 1909550000 | VG M50 - MS 1/EMV | C.16 |
| 1909560000 | VG M63 - MS 1/EMV | C.16 |
| 1909660000 | VG M12-K67 | C.6 |
| 1909670000 | VG M16-K67 4-8 | C.6 |
| 1909680000 | VG M16-K67 5-10 | C.6 |
| 1909690000 | VG M20-K67 6-12 | C.6 |
| 1909700000 | VG M20-K67 10-14 | C.6 |
| 1909710000 | VG M25-K67 | C.6 |
| 1909720000 | VG M32-K67 | C.6 |
| 1909730000 | VG M40-K67 | C.6 |
| 1909740000 | VG M50-K67 | C.6 |
| 1909750000 | VG M63-K67 | C.6 |
| 1909760000 | VG PG7-K67 | C.6 |
| 1909770000 | VG PG9-K67 | C.6 |
| 1909780000 | VG PG11-K67 | C.6 |
| 1909790000 | VG PG13,5-K67 | C.6 |
| 1909800000 | VG PG16-K67 | C.6 |
| 1909810000 | VG PG21-K67 | C.6 |
| 1909820000 | VG PG29-K67 | C.6 |
| 1909830000 | VG PG36-K67 | C.6 |
| 1909840000 | VG PG42-K67 | C.6 |
| 1909850000 | VG PG48-K67 | C.6 |
| 1909860000 | VG M16-1/K68 | C.7 |
| 1909870000 | VG M25-1/K68 | C.7 |
| 1909880000 | VG M32-1/K68 | C.7 |
| 1909890000 | VG M40-1/K68 | C.7 |
| 1909910000 | VG M16-1/MS68 | C.11 |
| 1909920000 | VG M25-1/MS68 | C.11 |
| 1909930000 | VG M32-1/MS68 | C.11 |
| 1909940000 | VG M40-1/MS68 | C.11 |
| 1909950000 | VG M50-1/MS68 | C.11 |
| 1909980000 | TS15 60 KLippon K1 CSS | B.133 |
| 1909990000 | TS15 64 Klippon K11 | B.134 |

## 1910000000

| | | |
|---|---|---|
| 1910010000 | TS15 90 KLippon K2 CSS | B.135 |
| 1910020000 | TS15 114 Klippon K21 CSS | B.136 |
| 1910030000 | TS15 155 Klippon K3 CSS | B.137 |
| 1910040000 | TS15 164 Klippon K31 CSS | B.138 |
| 1910050000 | TS35/235 KLIPPON K32 CSS | B.139 |
| 1910060000 | TS35 64 Klippon K4K11 | B.140 |
| 1910070000 | TS35 105 Klippon K41/POK4 | B.141 |
| 1910080000 | TS35/148 KLIPPON K5 CSS | B.142 |
| 1910090000 | TS35/203 KLIPPON K51POK5 | B.143 |
| 1910100000 | TS35/140 Klippon K52 POK51 | B.144 |
| 1910110000 | TS35/172 KLIPPON K6 CSS | B.145 |
| 1910120000 | TS35/239 KLIPPON K61POK6 | B.146 |
| 1910130000 | TS35/324 KLIPPON K7 CSS | B.147 |
| 1910140000 | TS35/260 KLIPPON K71 CSS | B.148 |
| 1911380000 | KDSU M20 BN O NI 2 G16 | C.31 |
| 1911390000 | KDSU M20 BN O NI 2 G20S | C.31 |
| 1911400000 | KDSU M20 BN O NI 2 G20 | C.31 |
| 1911420000 | KDSU M25 BN O NI 2 G25 | C.31 |
| 1911430000 | KDSU M32 BN O NI 2 G32 | C.31 |
| 1911440000 | KDSU M40 BN O NI 2 G40 | C.31 |
| 1911450000 | KDSU M50 BN O NI 2 G50S | C.31 |
| 1911460000 | KDSU M50 BN O NI 2 G50 | C.31 |
| 1911480000 | KDSU M63 BN O NI 2 G63S | C.31 |
| 1911490000 | KDSU M63 BN O NI 2 G63 | C.31 |
| 1911510000 | KSG M20 BN O NI 2 G16 | C.42 |
| 1911540000 | KSG M20 BN O NI 2 G20S | C.42 |
| 1911560000 | KSG M20 BN O NI 2 G20 | C.42 |
| 1911570000 | KSG M25 BN O NI 2 G25 | C.42 |
| 1911580000 | KSG M32 BN O NI 2 G32 | C.42 |
| 1911590000 | KSG M40 BN O NI 2 G40 | C.42 |
| 1911600000 | KSG M50 BN O NI 2 G50S | C.42 |
| 1911610000 | KSG M50 BN O NI 2 G50 | C.42 |
| 1911620000 | KSG M63 BN O NI 2 G63S | C.42 |
| 1911630000 | KSG M63 BN O NI 2 G63 | C.42 |
| 1913320000 | GWDR M12-NP | C.52 |

| Order No. | Type | Page |
|---|---|---|

## 1920000000

| | | |
|---|---|---|
| 1921720000 | VG H M20 MS | C.14 |
| 1921740000 | VG H M25 MS | C.14 |
| 1921760000 | VG H M32 MS | C.14 |
| 1921770000 | VG H M40 MS | C.14 |
| 1928060000 | TS15 68 Klippon POK1 CSS | B.166 |
| 1928070000 | TS15 98 Klippon POK2 CSS | B.167 |
| 1928080000 | TS15 147 Klippon POK3 CSS | B.168 |
| 1928110000 | TS35 POK4 Set | B.171 |
| 1928130000 | TS35 POK51 Set | B.173 |

## 1930000000

| | | |
|---|---|---|
| 1937630000 | KLIPPON K1 VMQ RAL7001 | B.133 |
| 1937720000 | KLIPPON K71 VMQ RAL7001 | B.148 |
| 1937730000 | KLIPPON K61 VMQ RAL7001 | B.146 |
| 1937740000 | KLIPPON K52 VMQ RAL7001 | B.144 |
| 1937750000 | KLIPPON K51 VMQ RAL7001 | B.143 |
| 1937800000 | KLIPPON K41 VMQ RAL7001 | B.141 |
| 1937810000 | KLIPPON K32 VMQ RAL7001 | B.139 |
| 1937820000 | KLIPPON K31 VMQ RAL7001 | B.138 |
| 1937830000 | KLIPPON K21 VMQ RAL7001 | B.136 |
| 1937840000 | KLIPPON K02 VMQ RAL7001 | B.132 |
| 1937850000 | KLIPPON K01 VMQ RAL7001 | B.131 |
| 1937860000 | KLIPPON K5 VMQ RAL7001 | B.142 |
| 1937870000 | KLIPPON K6 VMQ RAL7001 | B.145 |
| 1937880000 | KLIPPON K7 VMQ RAL7001 | B.147 |
| 1937890000 | KLIPPON K4 VMQ RAL7001 | B.140 |
| 1937900000 | KLIPPON K3 VMQ RAL7001 | B.137 |
| 1937910000 | KLIPPON K11 VMQ RAL7001 | B.134 |
| 1937920000 | KLIPPON K0 VMQ RAL7001 | B.130 |
| 1937930000 | KLIPPON K2 VMQ RAL7001 | B.135 |

## 1960000000

| | | |
|---|---|---|
| 1966780000 | IE-KOK-V1 | E.6 |
| 1966790000 | IE-KOK-V4 | E.6 |
| 1966810000 | IE-KO-HAT | E.5 |

## 3010000000

| | | |
|---|---|---|
| 3018950000 | MP TBF 30/19 | B.194 |

## 3070000000

| | | |
|---|---|---|
| 3073000000 | MOPL K11 STAHL | B.134 |
| 3073020000 | MOPL K21 STAHL | B.136 |
| 3073040000 | MOPL K31 STAHL | B.138 |
| 3073050000 | MOPL K32 STAHL | B.139 |
| 3073060000 | MOPL K4 STAHL | B.140 |
| 3073070000 | MOPL K41 STAHL | B.141 |
| 3073080000 | MOPL K5 STAHL | B.142 |
| 3073090000 | MOPL K51 STAHL | B.143 |
| 3073100000 | MOPL K52 STAHL | B.144 |
| 3073110000 | MOPL K6 STAHL | B.145 |
| 3073120000 | MOPL K61 STAHL | B.146 |
| 3073130000 | MOPL K7 STAHL | B.147 |
| 3073140000 | MOPL K71 STAHL | B.148 |

## 3080000000

| | | |
|---|---|---|
| 3080760000 | BD 1 brass | C.71 |
| 3080770000 | BD 1 ss | C.71 |

## 3890000000

| | | |
|---|---|---|
| 3896100000 | SP M6 15 MSZN | B.93 |
| 3896200000 | SP M6 20 MSZN | B.93 |
| 3896300000 | SP M6 30 MSZN | B.93 |

## 7900000000

| | | |
|---|---|---|
| 7906080000 | BK 4/E | B.150 |

## 8000000000

| | | |
|---|---|---|
| 8000003444 | KL SET 12W4 S | B.150 |
| 8000003445 | KL SET 9Z4 S | B.150 |
| 8000003446 | KLIPPON K41 2M25AB CSS | B.160 |
| 8000003447 | KLIPPON K41 3M20AB CSS | B.160 |
| 8000003448 | KLIPPON POK4 3M20AB CSS | B.184 |
| 8000003448 | KLIPPON POK4 3M20AB CSS | B.189 |
| 8000003589 | KLIPPON K41 M25WCSS EX | B.160 |
| 8000003590 | KLIPPON K41 M25ZCSS EX | B.160 |
| 8000003591 | KLIPPON K41 M20WCSS EX | B.160 |
| 8000003592 | KLIPPON K41 M20ZCSS EX | B.160 |
| 8000003593 | KLIPPON POK4 M20WCSS EX | B.184 |
| 8000003593 | KLIPPON POK4 M20WCSS EX | B.189 |
| 8000003594 | KLIPPON POK4 M20ZCSS EX | B.184 |
| 8000003594 | KLIPPON POK4 M20ZCSS EX | B.189 |
| 8000004129 | MOPL SET BK4 S | B.153 |
| 8000004130 | KL SET 5Z2.5 S | B.154 |
| 8000004131 | KL SET 5A4 S | B.154 |
| 8000004132 | MOPL SET BK6 S | B.155 |
| 8000004133 | KL SET 14Z2.5 S | B.156 |
| 8000004134 | KL SET 13A4 S | B.156 |
| 8000004135 | MOPL SET BK12 S | B.157 |
| 8000004136 | KL SET 24Z2.5 S | B.158 |

| Order No. | Type | Page |
|---|---|---|
| 8000004137 | KL SET 21A4 S | B.158 |
| 8000004138 | KL SET 5W4 S | B.159 |
| 8000004139 | KL SET 4Z4 S | B.159 |
| 8000004140 | KL SET 18W4 S | B.161 |
| 8000004141 | KL SET 15Z4 S | B.161 |
| 8000004142 | KL SET 32W4 S | B.150 |
| 8000004143 | KL SET 38Z2.5 S | B.162 |
| 8000004143 | KL SET 38Z2.5 S | B.184 |
| 8000004143 | KL SET 38Z2.5 S | B.190 |
| 8000004144 | KL SET 6A4 S | B.184 |
| 8000004144 | KL SET 6A4 S | B.186 |
| 8000004145 | KL SET 10A4 S | B.184 |
| 8000004145 | KL SET 10A4 S | B.187 |
| 8000004146 | KL SET 18A4 S | B.184 |
| 8000004146 | KL SET 18A4 S | B.188 |
| 8000004147 | KLIPPON K1 1,5M16AB CSS | B.153 |
| 8000004148 | KLIPPON K1 1M20AB CSS | B.153 |
| 8000004149 | KLIPPON K11 2M16AB CSS | B.154 |
| 8000004150 | KLIPPON K11 2M20AB CSS | B.154 |
| 8000004151 | KLIPPON K2 2M20AB CSS | B.155 |
| 8000004152 | KLIPPON K21 3M16AB CSS | B.156 |
| 8000004153 | KLIPPON K3 4M20AB CSS | B.157 |
| 8000004154 | KLIPPON K31 4M20AB CSS | B.158 |
| 8000004155 | KLIPPON K4 2M20AB CSS | B.159 |
| 8000004158 | KLIPPON K5 4M20AB CSS | B.161 |
| 8000004159 | KLIPPON K52 4M20AB CSS | B.162 |
| 8000004160 | KLIPPON P0K1 2M16AB CSS | B.184 |
| 8000004160 | KLIPPON P0K1 2M16AB CSS | B.186 |
| 8000004161 | KLIPPON P0K2 2M20AB CSS | B.184 |
| 8000004161 | KLIPPON P0K2 2M20AB CSS | B.187 |
| 8000004162 | KLIPPON P0K3 4M20AB CSS | B.184 |
| 8000004162 | KLIPPON P0K3 4M20AB CSS | B.188 |
| 8000004164 | KLIPPON P0K51 4M20ABCSS | B.184 |
| 8000004164 | KLIPPON P0K51 4M20ABCSS | B.190 |
| 8000004184 | KLIPPON K01 1M16AB CSS | B.152 |
| 8000004202 | KLIPPON K1 M16BCSS EX | B.153 |
| 8000004203 | KLIPPON K1 M20BCSS EX | B.153 |
| 8000004204 | KLIPPON K11 M16ZCSS EX | B.154 |
| 8000004207 | KLIPPON K11 M16ACSS EX | B.154 |
| 8000004208 | KLIPPON K11 M20ZCSS EX | B.154 |
| 8000004209 | KLIPPON K11 M20ACSS EX | B.154 |
| 8000004210 | KLIPPON K2 M20BCSS EX | B.155 |
| 8000004211 | KLIPPON K21 M16ZCSS EX | B.156 |
| 8000004212 | KLIPPON K21 M16ACSS EX | B.156 |
| 8000004213 | KLIPPON K3 M20BCSS EX | B.157 |
| 8000004214 | KLIPPON K31 M20ZCSS EX | B.158 |
| 8000004215 | KLIPPON K31 M20ACSS EX | B.158 |
| 8000004216 | KLIPPON K4 M20WCSS EX | B.159 |
| 8000004217 | KLIPPON K4 M20ZCSS EX | B.159 |
| 8000004218 | KLIPPON K5 4M20WCSS EX | B.161 |
| 8000004219 | KLIPPON K5 4M20ZCSS EX | B.161 |
| 8000004220 | KLIPPON K52 M20WCSS EX | B.162 |
| 8000004221 | KLIPPON K52 M20ZCSS EX | B.162 |
| 8000004222 | KLIPPON P0K1 M16BCSS EX | B.184 |
| 8000004222 | KLIPPON P0K1 M16BCSS EX | B.186 |
| 8000004223 | KLIPPON P0K1 M16ACSS EX | B.184 |
| 8000004223 | KLIPPON P0K1 M16ACSS EX | B.186 |
| 8000004224 | KLIPPON P0K2 M20BCSS EX | B.184 |
| 8000004224 | KLIPPON P0K2 M20BCSS EX | B.187 |
| 8000004225 | KLIPPON P0K2 M20ACSS EX | B.184 |
| 8000004225 | KLIPPON P0K2 M20ACSS EX | B.187 |
| 8000004226 | KLIPPON P0K3 M20BCSS EX | B.184 |
| 8000004226 | KLIPPON P0K3 M20BCSS EX | B.188 |
| 8000004228 | KLIPPON P0K3 M20ACSS EX | B.184 |
| 8000004228 | KLIPPON P0K3 M20ACSS EX | B.188 |
| 8000004229 | KLIPPON P0K51 M20WCSS E | B.184 |
| 8000004229 | KLIPPON P0K51 M20WCSS E | B.190 |
| 8000004230 | KLIPPON P0K51 M20ZCSS E | B.184 |
| 8000004230 | KLIPPON P0K51 M20ZCSS E | B.190 |
| 8000004365 | KL SET KLIPPON P0K1 BK4 | B.184 |
| 8000004365 | KL SET KLIPPON P0K1 BK4 | B.186 |
| 8000004366 | KL SET KLIPPON P0K2 BK6 | B.184 |
| 8000004366 | KL SET KLIPPON P0K2 BK6 | B.187 |
| 8000004367 | KL SET KLIPPON P0K3BK12 | B.184 |
| 8000004367 | KL SET KLIPPON P0K3BK12 | B.188 |
| 8000004495 | MOPL K1 BKVARIO SET | B.153 |
| 8000004496 | MOPL K2 BKVARIO SET | B.155 |
| 8000004497 | MOPL K3 BKVARIO SET | B.157 |

## 9000000000

| Order No. | Type | Page |
|---|---|---|
| 9008320000 | SDS 0.5X3.0X80 | E.17 |
| 9008330000 | SDS 0.6X3.5X100 | E.17 |
| 9008340000 | SDS 0.8X4.0X100 | E.17 |
| 9008350000 | SDS 1.0X5.5X150 | E.17 |
| 9008370000 | SDIS 0.4X2.5X75 | E.15 |
| 9008380000 | SDIS 0.5X3.0X100 | E.15 |
| 9008390000 | SDIS 0.6X3.5X100 | E.15 |
| 9008400000 | SDIS 0.8X4.0X100 | E.15 |
| 9008410000 | SDIS 1.0X5.5X125 | E.15 |
| 9008420000 | SDIS 1.2X6.5X150 | E.15 |
| 9008430000 | SDIS 1.6X8.0X175 | E.15 |
| 9008450000 | SDIZ 0.6X3.5X100 | E.15 |
| 9008460000 | SDIZ 0.8X4.0X100 | E.15 |
| 9008470000 | SDK PH0 | E.17 |
| 9008480000 | SDK PH1 | E.17 |
| 9008490000 | SDK PH2 | E.17 |
| 9008500000 | SDK PH3 | E.17 |
| 9008530000 | SDK PZ1 | E.17 |
| 9008540000 | SDK PZ2 | E.17 |
| 9008550000 | SDK PZ3 | E.17 |
| 9008560000 | SDIK PH0 | E.15 |
| 9008570000 | SDIK PH1 | E.15 |
| 9008580000 | SDIK PH2 | E.15 |
| 9008590000 | SDIK PH3 | E.15 |
| 9008640000 | SDIZ 0,8X5,5 150/248 | E.15 |
| 9008850000 | SK WSD-S 1,5-10,0 | E.19 |
| 9008860000 | SKS 2,0-8,0 | E.19 |
| 9008870000 | SKS 2,0-8,0 MR | E.19 |
| 9008880000 | TH-S 9-40 | E.19 |
| 9008890000 | SDIK PZ2 | E.15 |
| 9008900000 | SDIK PZ1 | E.15 |
| 9008910000 | SDIS 1.0X4.5X125 | E.15 |
| 9009010000 | SDS 1.2X6.5X150 | E.17 |
| 9009020000 | SDS 0.8X4.0X125 | E.17 |
| 9009030000 | SDS 0.4X2.5X75 | E.17 |
| 9009070000 | SK 10,0x125 | B.120 |
| 9009160000 | SD TH20 | B.130 |
| 9009170000 | SD TH15 | E.17 |
| 9009180000 | SD TH10 | E.17 |
| 9009730000 | SDI Set S2.5-5.5/PH1/2 | E.16 |
| 9009740000 | SD Set S2.5-5.5/PH1/2 | E.18 |
| 9009750000 | SYSTEM 11+1 | E.20 |

## 9010000000

| Order No. | Type | Page |
|---|---|---|
| 9010110000 | SDS 0.6X3.5X200 | E.17 |
| 9015900000 | FLECAFIX 11/24 | E.13 |
| 9015980000 | FLECAFIX 24/36 | E.13 |

## 9030000000

| Order No. | Type | Page |
|---|---|---|
| 9037160000 | SDS 0.4X2.0X60 | E.17 |

## 9200000000

| Order No. | Type | Page |
|---|---|---|
| 9202510000 | WK 1/4" C6,3 E6,3 | E.11 |
| 9204780000 | KOBBS 19X75 | E.4 |
| 9204790000 | IE-K0K-V5 | E.6 |
| 9204810000 | K0K-46X46 | E.6 |
| 9204820000 | K0K-52X36 | E.6 |
| 9204830000 | K0K-65X36 | E.6 |
| 9204840000 | K0K-68X68 | E.6 |
| 9204850000 | K0K-86X36 | E.6 |
| 9204860000 | K0K-91X36 | E.6 |
| 9204870000 | K0K-112X36 | E.6 |
| 9204880000 | K0S-M16 | E.4 |
| 9204900000 | K0S-M25 | E.4 |
| 9204910000 | K0S-M32 | E.4 |
| 9204920000 | K0S-M40 | E.4 |
| 9204930000 | K0S-PG9 | E.4 |
| 9204940000 | K0S-PG11 | E.4 |
| 9204950000 | K0S PG 13/M20 | E.4 |
| 9204960000 | K0S-PG16 | E.4 |
| 9204970000 | K0S-PG21 | E.4 |
| 9204980000 | K0S-PG29 | E.4 |
| 9204990000 | K0S-PG36 | E.4 |
| 9205000000 | K0HS 9.5+19 | E.4 |
| 9205010000 | K0HS 19 | E.4 |
| 9205020000 | K0PD 10.0 | E.5 |
| 9205030000 | KOBBS 9.5X50 | E.4 |
| 9205040000 | KOBBS 19X55 | E.4 |
| 9205550000 | SDI Set S2.0-5.5 | E.16 |
| 9205560000 | SD Set S2.0-5.5 | E.18 |
| 9205690000 | SDIS 0.4X2.0X60 | E.15 |
| 9205700000 | SDIS 1.0X4.5X175 | E.15 |
| 9205710000 | SDIS 1.0X5.5X175 | E.15 |

## 9500000000

| Order No. | Type | Page |
|---|---|---|
| 9500870000 | ES TBF M10 ss | B.194 |
| 9500950000 | MP TBF 56/30 | B.196 |
| 9500960000 | MP TBF 49/30 | B.196 |
| 9502700000 | ES TBF M6 brass | B.194 |
| 9502710000 | ES TBF M10 brass | B.194 |
| 9502720000 | MP TBF 19/15 | B.194 |
| 9502730000 | MP TBF 30/30 | B.195 |
| 9502740000 | MP TBF 37/30 | B.195 |
| 9502750000 | MP TBF 60/30 | B.197 |
| 9502800000 | TBF 49/30/18 7035 | B.196 |
| 9502810000 | TBF 56/30/18 7035 | B.196 |
| 9502820000 | TBF 60/37/18 7035 | B.198 |
| 9502830000 | TBF 60/60/18 7035 | B.198 |
| 9502840000 | TBF 49/30/21 trsp | B.196 |
| 9502850000 | TBF 56/30/21 trsp | B.196 |
| 9502860000 | TBF 60/37/21 trsp | B.198 |
| 9502870000 | TBF 60/60/21 trsp | B.198 |
| 9502910000 | MP TBF 60/37 | B.198 |
| 9502920000 | MP TBF 60/60 | B.198 |
| 9502930000 | EF TBF 19/15 | B.194 |
| 9502950000 | EF TBF 30/30 | B.195 |
| 9502960000 | EF TBF 37/30 | B.195 |
| 9502990000 | EF TBF 60/30 | B.197 |
| 9503000000 | EF TBF 60/37 | B.198 |
| 9503010000 | EF TBF 60/60 | B.198 |
| 9505240000 | ES TBF M6 ss | B.194 |

## 9510000000

| Order No. | Type | Page |
|---|---|---|
| 9510210000 | Klippon P0K 1 Ex | B.166 |
| 9510220000 | Klippon P0K 2 Ex | B.167 |
| 9510230000 | Klippon P0K 4 Ex | B.171 |
| 9510240000 | Klippon P0K 5 Ex | B.172 |
| 9510250000 | Klippon P0K 51 Ex | B.173 |
| 9510260000 | Klippon P0K 6 Ex | B.174 |
| 9510270000 | Klippon P0K 7 Ex | B.175 |
| 9510280000 | Klippon P0K 8 Ex | B.177 |
| 9510290000 | Klippon P0K 9 Ex | B.178 |
| 9510300000 | Klippon P0K 91 Ex | B.179 |
| 9510310000 | Klippon P0K 10 Ex | B.180 |
| 9510320000 | Klippon P0K 3 Ex | B.168 |
| 9510330000 | Klippon P0K 31 Ex | B.169 |
| 9510340000 | Klippon P0K 32 Ex | B.170 |
| 9510350000 | Klippon P0K 71 Ex | B.176 |
| 9510360000 | Klippon P0K 11 Ex | B.181 |
| 9510370000 | Klippon P0K 12 Ex | B.182 |
| 9510470000 | Klippon P0K 91 | B.179 |
| 9510510000 | Klippon P0K 32 | B.170 |
| 9510520000 | Klippon P0K 71 | B.176 |
| 9510530000 | Klippon P0K 11 | B.181 |
| 9510540000 | Klippon P0K 12 | B.182 |
| 9510570000 | P0K M0PL 0808 | B.166 |
| 9510580000 | P0K M0PL 0811 | B.167 |
| 9510590000 | P0K M0PL 1212 | B.171 |
| 9510600000 | P0K M0PL 1222 | B.172 |
| 9510610000 | P0K M0PL 1616 | B.173 |
| 9510620000 | P0K M0PL 1626 | B.174 |
| 9510630000 | P0K M0PL 1636 | B.175 |
| 9510640000 | P0K M0PL 2525 | B.181 |
| 9510650000 | P0K M0PL 2540 | B.182 |
| 9510660000 | P0K M0PL 2560 | B.179 |
| 9510670000 | P0K M0PL 4040 | B.180 |
| 9510680000 | P0K M0PL 0816 | B.168 |
| 9510690000 | P0K M0PL 0819 | B.169 |
| 9510700000 | MP P0K 32 | B.170 |
| 9510710000 | P0K M0PL 1656 | B.176 |
| 9510900000 | MF P0K small | B.166 |
| 9510910000 | MF P0K big | B.171 |
| 9511190000 | EB K71/P0K10 | B.148 |
| 9511210000 | EB K51/P0K5 | B.143 |
| 9511220000 | EB K52/P0K | B.144 |
| 9511230000 | EB K61/P0K6 | B.146 |

## 9520000000

| Order No. | Type | Page |
|---|---|---|
| 9526840000 | KLIPPON K1 EX | B.133 |
| 9526850000 | KLIPPON K11 EX | B.134 |
| 9526860000 | KLIPPON K2 EX | B.135 |
| 9526870000 | KLIPPON K21 EX | B.136 |
| 9526880000 | KLIPPON K3 EX | B.137 |
| 9526890000 | KLIPPON K31 EX | B.138 |
| 9526900000 | KLIPPON K32 EX | B.139 |
| 9526910000 | KLIPPON K4 EX | B.140 |
| 9526920000 | KLIPPON K41 EX | B.141 |
| 9526930000 | KLIPPON K5 EX | B.142 |
| 9526940000 | KLIPPON K51 EX | B.143 |
| 9526950000 | KLIPPON K52 EX | B.144 |
| 9526960000 | KLIPPON K6 EX | B.145 |
| 9526970000 | KLIPPON K61 EX | B.146 |
| 9526980000 | KLIPPON K7 EX | B.147 |
| 9526990000 | KLIPPON K71 EX | B.148 |
| 9527590000 | KLIPPON K MF KIT 25 | B.141 |
| 9529080000 | KLIPPON K MF KIT 16 | B.142 |
| 9529090000 | KLIPPON K0 RAL7001 | B.130 |
| 9529100000 | KLIPPON K01 RAL7001 | B.131 |
| 9529110000 | KLIPPON K02 RAL7001 | B.132 |
| 9529120000 | KLIPPON K1 RAL7001 | B.133 |
| 9529130000 | KLIPPON K11 RAL7001 | B.134 |
| 9529140000 | KLIPPON K2 RAL7001 | B.135 |
| 9529150000 | KLIPPON K21 RAL7001 | B.136 |
| 9529160000 | KLIPPON K3 RAL7001 | B.137 |
| 9529170000 | KLIPPON K31 RAL7001 | B.138 |
| 9529180000 | KLIPPON K32 RAL7001 | B.139 |
| 9529190000 | KLIPPON K4 RAL7001 | B.140 |
| 9529200000 | KLIPPON K41 RAL7001 | B.141 |
| 9529210000 | KLIPPON K5 RAL7001 | B.142 |
| 9529220000 | KLIPPON K51 RAL7001 | B.143 |
| 9529230000 | KLIPPON K52 RAL7001 | B.144 |
| 9529240000 | KLIPPON K6 RAL7001 | B.145 |
| 9529250000 | KLIPPON K61 RAL7001 | B.146 |
| 9529260000 | KLIPPON K7 RAL7001 | B.147 |
| 9529270000 | KLIPPON K71 RAL7001 | B.148 |

## 9530000000

| Order No. | Type | Page |
|---|---|---|
| 9535170000 | MPC 07/12/07 7035 | B.202 |
| 9535180000 | MPC 07/12/07 trsp | B.202 |
| 9535210000 | MPC 07/12/12 7035 | B.202 |
| 9535220000 | MPC 07/12/12 trsp | B.202 |
| 9535230000 | MPC 12/12/07 7035 | B.203 |
| 9535240000 | MPC 12/12/07 trsp | B.203 |
| 9535290000 | MPC 12/17/07 7035 | B.203 |
| 9535300000 | MPC 12/17/07 trsp | B.203 |
| 9535310000 | MPC 12/17/10 7035 | B.204 |
| 9535320000 | MPC 12/17/10 trsp | B.204 |
| 9535330000 | MPC 12/17/12 7035 | B.204 |
| 9535340000 | MPC 12/17/12 trsp | B.204 |
| 9535370000 | MPC 17/17/07 7035 | B.205 |
| 9535380000 | MPC 17/17/07 trsp | B.205 |
| 9535430000 | MPC 17/17/15 7035 | B.206 |
| 9535440000 | MPC 17/17/15 trsp | B.206 |
| 9535470000 | MPC 17/25/10 7035 | B.206 |
| 9535480000 | MPC 17/25/10 trsp | B.206 |
| 9535540000 | MP MPC 07/12 | B.202 |
| 9535550000 | MP MPC 12/12 | B.203 |
| 9535560000 | MP MPC 12/17 | B.203 |
| 9535570000 | MP MPC 17/17 | B.205 |
| 9535580000 | MP MPC 17/25 | B.206 |
| 9535590000 | HG MPC | B.202 |
| 9535600000 | MF MPC | B.202 |
| 9535680000 | FPC 20/20/13 trsp | B.209 |
| 9535690000 | FPC 20/20/13 7035 | B.209 |
| 9535700000 | FPC 20/30/13 trsp | B.209 |
| 9535710000 | FPC 20/30/13 7035 | B.209 |
| 9535720000 | FPC 20/40/13 trsp | B.210 |
| 9535730000 | FPC 20/40/13 7035 | B.210 |
| 9535740000 | FPC 30/30/13 trsp | B.210 |
| 9535750000 | FPC 30/30/13 7035 | B.210 |
| 9535760000 | FPC 30/40/13 trsp | B.211 |
| 9535770000 | FPC 30/40/13 7035 | B.211 |
| 9535810000 | FPC 40/60/13 7035 | B.211 |
| 9535820000 | FPC 40/60/13 trsp | B.211 |
| 9535920000 | MP FPC 20/20 | B.209 |
| 9535930000 | MP FPC 20/30 | B.209 |
| 9535940000 | MP FPC 20/40 | B.210 |
| 9535950000 | MP FPC 30/30 | B.210 |
| 9535960000 | MP FPC 30/40 | B.211 |
| 9535980000 | MP FPC 40/60 | B.211 |
| 9535990000 | HG FPC | B.209 |
| 9536040000 | MF FPC | B.209 |

## 9910000000

| Order No. | Type | Page |
|---|---|---|
| 9918130000 | CROSS-KEY UNIVERSAL | E.23 |
| 9918140000 | CROSS-KEY UNIVERSAL S | E.23 |
| 9918150000 | CROSS-KEY MASTER | E.23 |
| 9918370000 | DMS MANUELL 0,5-1,7 | E.11 |
| 9918380000 | DMS MANUELL 2,0-8,0 | E.11 |
| 9918390000 | DMSI MANUELL 0,5-1,7 | E.12 |
| 9918400000 | DMSI MANUELL 2,0-8,0 | E.12 |
| 9918410000 | WK SI 0,4x2,5 | E.12 |
| 9918420000 | WK SI 0,5x3,0 | E.12 |
| 9918430000 | WK SI 0,6x3,5 | E.12 |
| 9918440000 | WK SI 0,8x4,0 | E.12 |
| 9918450000 | WK SI 1,0x5,5 | E.12 |
| 9918460000 | WK IK PH0 | E.12 |
| 9918470000 | WK IK PH1 | E.12 |
| 9918480000 | WK IK PH2 | E.12 |
| 9918490000 | WK IK PZ0 | E.12 |
| 9918500000 | WK IK PZ1 | E.12 |
| 9918510000 | WK IK PZ2 | E.12 |
| 9918520000 | WK S 0,4x2,5 | E.11 |
| 9918530000 | WK S 0,5x3,0 | E.11 |
| 9918540000 | WK S 0,6x3,5 | E.11 |
| 9918550000 | WK S 0,8x4,0 | E.11 |
| 9918560000 | WK S 1,0x5,5 | E.11 |
| 9918570000 | WK K PH0 | E.11 |
| 9918580000 | WK K PH1 | E.11 |
| 9918590000 | WK K PH2 | E.11 |
| 9918600000 | WK K PZ0 | E.11 |
| 9918610000 | WK K PZ1 | E.11 |
| 9918620000 | WK K PZ2 | E.11 |

# Addresses worldwide

**AE United Arab Emirates**
Weidmuller Middle East FZE
P.O. Box 8591, SAIF-Zone
Sharjah U. A. E.
Phone +971 6 5572723
Fax +971 6 5572724
wme.info@weidmueller.com

**AR Argentina**
CPI SA
Bauness 2660
1431 Buenos Aires
Phone +54 11 45238008
Fax +54 11 45220546
info@cpi.com.ar
www.cpi.com.ar

**AT Austria**
Weidmüller GmbH
IZ NOE Sued Straße 2b,
Obj. M59
2355 Wiener Neudorf
Phone +43 2236 6708-0
Fax +43 2236 6708-899
office.at@weidmueller.com

**AU Australia**
Weidmüller Pty. Ltd.
P.O.Box 6944
Huntingwood Drive 43
Huntingwood,
NSW, 2148
Phone +61 2 9671-9999
Fax +61 2 9671-9911
info@weidmuller.com.au
www.weidmuller.com.au

**AZ Azerbaijan**
West Industries Ltd.
Caspian Plaza, 5-th Floor
44 J. Jabbarly Str., Baku
Phone +99412 596 15 15
Fax +99412 596 14 93
sales@west-i.com

**BA Bosnia and Herzegovina**
Representative Office
Weidmüller Interface
GmbH & Co. KG
Ustanicka 189, III sprat,
lokal 7a
11050 Beograd
Phone +381 11 288 5274
Fax +381 11 288 5274
zoran.rabrenovic@
weidmueller.com

BH ES ELEKTROSISTEM d.o.o.
Bul. Vojvode S.
Stepanovica kod br. 272
78000 BiH - Banja Luka
Phone +387 51 420-340
Fax +387 51 420-341
elsist@inecco.net
www.elektrosistem.ba

**BE Belgium**
Weidmüller Benelux B.V.
Mechelsesteenweg 519 bus
6 en 7
1930 Nossegem
Phone +32 2 752 4070
Fax +32 2 751 3606
info@weidmueller.be
www.weidmueller.be

**BG Bulgaria**
Weid-Bul EOOD
1756 Sofia
13, bul. "Kliment Ohridski"
Phone +359 2 9632560
Fax +359 2 9631098
sofia@weidbul.com
www.weidbul.com

**BH Bahrain**
Khayber Trading Company
P.O. Box 1976 Manama,
Phone +973 720747
Fax +973 720331
khayber@batelco.com.bh

**BR Brazil**
Weidmüller Conexel do Brasil
Conexões Elétricas Ltda.
Rua Garcia Lorca, 176
09695-900, Sao Paulo SP
Phone +55 11 43669600
Fax +55 11 43621677
vendas@weidmueller.com.br
www.weidmueller.com.br

**BY Belarus**
Technikon Ltd.
Nezavisimosti pr.177-9
Minsk 220125
Phone +375 17 3931177
Fax +375 17 3930080
wm@technikon.by

**CA Canada**
W Interconnections CANADA
Ltd.
10 Spy Court, Markham,
Ontario L3 R5 H6
Phone +1 905 475-1507
Fax +1 905 475-2798
info1@weidmuller.ca
www.weidmuller.ca

**CH Switzerland**
Weidmüller Schweiz AG
Rundbuckstraße 2
8212 Neuhausen am Rheinfall
Phone +41 52 6740707
Fax +41 52 6740708
info@weidmueller.ch
www.weidmueller.ch

**CL Chile**
Felipe Bahamondes S.A./
ATS AGRO
Maria Luisa Santander 0475
Casilla 3425
Santiago
Phone +56 2 341-1271
Fax +56 2 341-1275
felipe@atsintech.com

CPI CHILE LTDA
Av. Presidente Frei Montalva
6001-47, Conchali -
Region Metropolitana -
Santiago
cpi@cpichile.cl

**CN China**
Weidmüller Interface
International Trading
(Shanghai) Co., Ltd.
25F, BM Intercontinental
Business Center,
100 Yutong Road,Shanghai
200070
P.R. China
Phone +86 21 22195008
Fax +86 21 22195009
www.cnweidmuller.com

**CO Colombia**
Automatización Avanzada S. A.
Carrera 97 No.24c, 23 B4
4 Bogotá D. C.
Phone +57 1 5478510
Fax +57 1 4223044
comercial@
automatizacionavanzada.com
www.
automatizacionavanzada.com

**CR Costa Rica**
ELVATRON S.A.
la Uruca 400 Norte
Banco Costa Rica
San José Costa Rica
Phone +506 2 961060
Fax +506 5 200609
dirk.haase@elvatron.com
www.elvatron.com

**CZ Czech Republic**
Weidmüller s. r. o.
Lomnického 5/1705
14000 Praha 4
Phone +420 2 44001400
Fax +420 2 44001499
office@weidmueller.cz
www.weidmueller.cz

**DE Germany**
Weidmüller GmbH & Co. KG
Postfach 3054
32720 Detmold
Ohmstraße 9
32758 Detmold
Phone +49 5231 1428-0
Fax +49 5231 1428-116
weidmueller@weidmueller.de
www.weidmueller.de

**DK Denmark**
Wexøe A/S
Lejrvej 31
3500 Vaerloese
Phone +45 45465800
Fax +45 45465801
wexoe@wexoe.dk
www.wexoe.dk

**EC Ecuador**
Elsystec S. A. Electricidad
Sistemas y Tecnología
Vasco de Contreras N35-25
y Mañosca, Quito
Phone +593 2 2456510
Fax +593 2 2456755
Elsystec@uio.satnet.net

**EE Estonia**
Representative Office
Weidmüller Interface
GmbH & Co. KG
Udens str. 12-118
Riga, LV-1007
Latvia
Phone +371 29254766
Fax +371 67624562
ilgonis.rudaks@
weidmueller.com

Soots Interface OÜ
Pärnu mnt 142
11317 Tallinn
Phone +372 5296177
Fax +372 6096933
info@sootsinterface.ee
www.sootsinterface.ee

**EG Egypt**
Standard Electric (OMEGA)
87, Mohamed Farid Street
Heliopolis, Cairo
Phone +20 26422977
Fax +20 26422955
stdelec@rite.com

**ES Spain**
Weidmüller S. A.
Narcis Monturiol 11-13
Pol. Ind. Sudoeste
08960 Sant Just Desvern
Barcelona
Phone +34 93 4803386
Fax +34 93 3718055
weidmuller@weidmuller.es
www.weidmuller.es

**FI Finland**
JUHA-ELEKTRO OY
P. O. Box 57, 641 Helsinki
Kylvöpolku 6, 680 Helsinki
Phone +358 10 8328 100
Fax +358 10 8328 109
info@juha-elektro.fi
www.juha-elektro.fi

**FR France**
Weidmüller E. U. R. L.
12, Chaussée Jules César
B.P. 263 Osny
95523 Cergy Pontoise Cedex
Phone +33 1 34245500
Fax +33 1 34245501
mail@weidmuller.fr

**GB Great Britain**
Weidmüller Ltd
Klippon House
Centurion Court Office
Meridian East, Meridian
Business Park
Leicester, LE19 1TP
Phone +44 1162 823470
Fax +44 1162 893582
marketing@weidmuller.co.uk
www.weidmuller.co.uk

**GR Greece**
Electrorama S.A.
1 An. Martali Str.
41335 Larissa
Phone +30 2410 552533188
Fax +30 2410 283463189
valvizos@electrorama.com.gr

GA Contact Solutions
11, Ippokratous Str.
14452 Metamorfosi Attika
Phone +30 210 2823233
Fax +30 210 2823233
gasaless@gmail.com

**HK Hong Kong**
Weidmuller (Hong Kong)
Limited
Unit 1617, The Metropolis
Tower, No.10, Metropolis
Drive, Hunghom, Kowloon
Phone +852 31548082
Fax +852 31548099
info-hk@weidmueller.de
Hong Kong

**HR Croatia**
Elektro Partner d.o.o.
Slavonska Avenija 24/6
10000 Zagreb
Phone +385 1 6184793
Fax +385 1 6184795
elektropartner@zg.t-com.hr

**HU Hungary**
Weidmüller Kft
Gubacsi út 6
1097 Budapest
Phone +36 1 3827700
Fax +36 1 3827701
info@weidmueller.hu

**ID Indonesia**
PT. Nego Electrindo
Ruko Mega Grosir Cempaka
Mas, Blok I No 20 – 22
Jl. Let.Jend. Suprato –
Jakarta 10640
Phone +62 21 42882255
Fax +62 21 42882266
sales@negoelectrindo.co.id

**IE Ireland**
Please contact
Weidmüller Ltd.
in Great Britain

**IL Israel**
A.U.Shay Ltd.
P.O. Box 10049
Embar Street 23/25
49222 Petach-Tikva
Phone +972 3 9233601
Fax +972 3 9234601

ATEKA Ltd.
4, Ha'Tavor lane
Industrial area Segula
49691 Petach-Tikva
Phone +972 73 2001311
Fax +972 3 9244245
marketing@ateka.co.il
www.ateka.co.il

**IN India**
Weidmuller
Electronics India Pvt. Ltd
Plot # 32, 3rd Floor,
North Court
Lane North Avenue,
Opp Jogger's Park
Kalyani Nagar, Maharastra
411006 Pune
Phone +91 9049800960
Nitish.Rajan@weidmueller.de

**IS Iceland**
Samey Automation Center
Lyngas 13, 210 Garoabaer,
Phone +354 510 5200
Fax +354 510 5201
samey@samey.is

**IT Italy**
Weidmüller S.R.L.
Via Albert Einstein 4
20092 Cinisello Balsamo
Milano
Phone +39 02 660681
Fax +39 02 6124945
weidmuller@weidmuller.it
www.weidmuller.it

**JO Jordan**
HORIZONS
P.O.Box: 330607
Amman Jordan 11133
Phone +962 6 4882114
Fax +962 6 4882115
horizons@go.com.jo

**JP Japan**
Nihon Weidmüller Co. Ltd.
Sphere Tower Tennoz,
2-2-8 Higashi-Shinagawa,
Shinagawa-Ku,
Tokyo 140-0002
Phone +81 3 6711-5300
Fax +81 3 6711-5333
www.weidmuller.co.jp

**KR Korea**
Weidmuller Korea Co. Ltd.
6F Seokyoung B/D,
242-54 Nonhyun-dong,
Gangnam-gu
Seoul, 135-830
Phone +82 2 5160003
Fax +82 2 5160090
info@weidmuller.co.kr

**KW Kuwait**
KANA CONTROLS General
Trading & Cont. CO. W.L.L.
Al Rai Industrial Area,
Plot 28-30, St. 31
P.O.Box: 25593
Safat, 13016
Phone +966-474 1373/4
Fax +966-474 1537
info@kanacontrols.com

**LB Lebanon**
Progress Engineering &
Trading Enterprises
Al Nahr Street, Beirut
Phone +961 1 444664
Fax +961 1 561880
progress@inco.com.lb

**LT Lithuania**
Representative Office
Weidmüller Interface
GmbH & Co. KG
Udens str. 12-118
Riga, LV-1007
Latvia
Phone +371 29254766
Fax +371 67624562
ilgonis.rudaks@
weidmueller.com

ELEKTROS IRANGA
Tinklu g.29a, 5319 Panevezys
Phone +370 45582828
Fax +370 45582727
info@eliranga.lt

**LU Luxembourg**
Please contact
Weidmüller Benelux B.V.
in the Netherlands

**LV Latvia**
Representative Office
Weidmüller Interface
GmbH & Co. KG
Udens str. 12-118
Riga, LV-1007
Latvia
Phone +371 29254766
Fax +371 67624562
ilgonis.rudaks@
weidmueller.com

SIA "ABI4"
Daugavgrivas str. 31b
1007 Riga
Phone +371 67470999
Fax +371 67465637
abi_4@tvnet.lv

**MD Moldova**
BERHORD A&D srl
44, srt. Sarmizegetusa 37/3
Off 414. b-dul Decebal, 3,
Chisinau, MD 2001
Phone +373 22 507137
Fax +373 22 507134
atiuleanu@berhord.com

**ME Montenegro**
Representative Office
Weidmüller Interface
GmbH & Co. KG
Ustanicka 189, III sprat,
lokal 7a
11050 Beograd
Phone +381 11 288 5274
Fax +381 11 288 5274
zoran.rabrenovic@
weidmueller.com

**MK Macedonia**
Representative Office
Weidmüller Interface
GmbH & Co. KG
Ustanicka 189, III sprat,
lokal 7a
11050 Beograd
Phone +381 11 288 5274
Fax +381 11 288 5274
zoran.rabrenovic@
weidmueller.com

ELEKTRO – SMK dooel
UL. III Makedonska brigada b.b.
1000 Skopje
Phone +389 22 460 295
Fax +389 22 460 298
Elektro-smk@telekabel.net.mk

**MT Malta**
E. S. S., Electrical Supplies
& Services Ltd
104 J. Sciberras Str.
Hamrun HMR 08
Phone +356 21 255 777
Fax +356 21 255 999
robert@ess.com.mt

**MU Mauritius**
MUBELO Electrical Ltd
Office 26, Gateway building,
St Jean Road, Quatre Bornes
Phone +230 467 0989
Fax +230 465 4051
richard.mubelo@orange.mu

Group companies DE
Agency abroad DE
Without own Agency DE

**MX Mexico**
W Interconnections,
S.A. DE C.V.
Blvd. Hermanos Serdán
No. 698
Col. San Rafael Oriente
Puebla, C.P. 72029
Phone +52 222 22686227
clientes@weidmuller.com.mx

**MY Malaysia**
Connect Plus Technology
Sdn Bhd
No. 43, Jalan PJS, 11/22,
Bandar Sunway,
46150 Petaling Jaya
Selangor Darul Ehsan
Phone +60 3 5633 7363
Fax +60 3-5633 6562
paul@cptech.com.my
www.cptech.com.my

**NL Netherlands**
Weidmüller Benelux B.V.
Franciscusweg 221
1216 SE Hilversum
Postbus 1505
1200 BM Hilversum
Phone +31 35 6261261
Fax +31 35 6232044
info@weidmuller.nl
www.weidmuller.nl

**NO Norway**
Siv. Ing. J. F. Knudtzen A/S
Billingstadsletta 97
P.O. Box 160
1378 Nesbru
Phone +47 66 983350
Fax +47 66 980955
firmapost@jfknudtzen.no
www.jfknudtzen.no

**NZ New Zealand**
Cuthbert S. Steward Limited
27 Te Puni Street
POB 38496
Petone, Wellington
Phone +64 4 5686156
Fax +64 4 5686056
info@weidmueller.de

**OM Oman**
DAN INTERNATIONAL LLC.
PO.BOX 2901
111 Seeb
Phone +968 503 677
Fax +968 503 755
yedu@danintl.com

**PE Peru**
IMPEXINCA S.A.C.
Calle Ortiz de Zevallos N°105,
18 Lima, Miraflores,
Phone +511 447 5608
info@impexinca.pe

J & W CIA. S.A.
Calle 6 Mz. D Lte. 23
Urb. Ind. Grimanesa
Callao 01
Phone +51 1 57 22539
Fax +51 1 57 20152
lespinoza@jwcia.com
www.jwcia.com

**PH Philippines**
Enclosure Systems Specialists Inc
Room 103 Narra Building
2276 Don Chino Roces
Avenue
Makati City 1231
Phone +63 2 813 8580
Fax +63 2 813 8596
sales_encsys@pldtdsl.net

**PK Pakistan**
Kana Controls (Pak)
Apartment No. 33 C III
Chenab Block,
Allama Iqbal Town
Lahore, Pakistan
Phone +92 42 5419948
+92 42 7845160
Fax +92 42 5422895
nadeem@kanapak.com
www.kanapak.com

**PL Poland**
Weidmüller Sp. z o.o.
Ul. Goledzinowska 10
03-302 Warszawa
Phone +48 22 5100940
Fax +48 22 5100941
biuro@weidmuller.com.pl
www.weidmuller.pl

**PT Portugal**
Weidmüller Sistemas de
Interface S. A.
Estrada Outeiro Polima,
R. Augusto
Dias da Silva, Lote B, Esct. 2
2785-515 Abóboda -São
Domingos de Rana
Phone +351 21 4459191
Fax +351 21 4455871
www.weidmueller.pt

**QA Qatar**
Doha Motors Trading Co.
(Technical Division)
Post Box No. 145
Airport Road
Doha - Qatar
Phone +974 465 1441
Fax +974 465 0925
dmtctech@qatar.net.qa

**RO Romania**
Weidmüller Interface
GmbH & Co.KG
Representative Office - Romania
Brasov Business Park
Ionescu Crum Street, no. 1
1st Tower, 1st Floor, Office 4
RO - 500446 Brasov
Romania
Phone +40 268 446 222
Fax +40 268 446 224
claudiu.totea@weidmueller.com

**RS Serbia**
Representative Office
Weidmüller Interface
GmbH & Co. KG
Ustanicka 189, III sprat,
lokal 7a
11050 Beograd
Phone +381 11 288 5274
Fax +381 11 288 5274
zoran.rabrenovic@
weidmueller.com

ES-YU Elektrosistem
Pariske komune 41
11070 Novi Beograd, Serbia
Phone +381 11 3018660
Fax +381 11 2693608
esyu@eunet.rs

**RU Russia**
OOO Weidmüller
Warshavskoye highway, 25A,
bld. 6
117105 Moskau
Phone +7 4 95 771-6940
Fax +7 4 95 771-6941
info@weidmueller.ru
www.weidmueller.ru

**SA Saudi-Arabia**
Al Abdulkarim Holding Co.
P.O Box. 4
Dammam 31411
Phone +9668337110
Fax +9668338242
salehsk@akh.com.sa
www.weidmueller.ae

Saudi Electric Supply Co.
P.O. Box 3298
Al Khobar 31952
Phone +966 3 882 9546227
Fax +966 3 882 9547
Safdar.malik@sesco-ge.com

**SE Sweden**
Weidmüller AB
Axel Daniessons väg 271
P.O. box 31025
200 49 Malmö
Phone +46 (0) 7 71 43 00 44
Fax +46 (0) 40 37 48 60
info@weidmuller.se
www.weidmuller.se

**SG Singapore**
Weidmüller Pte. Ltd.
70 Bendemeer Road
#04-03 Luzerne
Singapore 339940
Phone +65 6841 5311
Fax +65 6841 5377
info@weidmuller.com.sg
www.weidmuller.com.sg

**SI Slovenia**
ELEKTROSPOJI d.o.o.
Stegne 25, 1000 Ljubljana
Phone +386 15113810
Fax +386 15111604
info@elektrospoji.si
www.elektrospoji.si

**SK Slovakia**
ELEKTRIS s.r.o.
Elektrárenská 1
83104 Bratislava
Phone +421 2 49200113
Fax +421 2 49200119
bratislava@elektris.sk

**TH Thailand**
Pisanu Engineering Co., Ltd
800/43-45 Soi Trakulsuk
Asoke-dindaeng Road,
Dindaeng, Bangkok 10400
Phone +66 2 245 9113
Fax +66 2 6429220
jayasankar@pisanu.co.th
www.pisanu.co.th

**TN Tunisia**
Please contact
Weidmüller E.U.R.L.
in France

**TR Turkey**
Weidmüller Elektronik Ticaret
Ltd. Sirketi
Kavacik Mah. Orhan Veli Kanik
Caddesi 9/1
34810 Beykoz – Istanbul
Phone +90 216 5371070 (Pbx)
Fax +90 216 5371077
info@weidmuller.com.tr
www.weidmuller.com.tr

**TW Taiwan**
Fittatek Co., Ltd.
12F No. 185 Fu-Kuo Road,
Tso Ying Dist, Kaohsiung
Phone +886 7 556 0858
Fax +886 7 556 3279
stanley@fittatek.com.tw
www.fittatek.com.tw

Eucan Enterprise Ltd.
No. 145 He Ping 2nd Rd
Kaohsiung
Phone +886 7 715 6610
Fax +886 7 715 8748
mark@eucan.com.tw
www.eucan.com.tw

**UA Ukraine**
TEKO INTERFACE
Lomonosova str. 73g
03022 Kiev
Phone +38 044 3740640
Fax +38 044 3740642
weidmueller@tekointerface.com
www.tekointerface.com.ua

**US United States**
W-Interconnections Inc.
821 Southlake Boulevard,
Virginia - Richmond 23236
Phone +1 804 7942877
Fax +1 804 3792593
info@weidmuller.com
www.weidmuller.com

**UY Uruguay**
REWO Uruguay S.A
AV. Bolivia 2001 Esq Rocafuerte
Carrasco Montevideo 11300
Phone / Fax +598 260 48439
clorda@rewouruguay.com.uy

**UZ Usbekistan**
OOO "Elektro Potential"
Gani Mavljanova str., 2B
100084 Tashkent
Phone +998 98-3003821
Fax +998 71-1249286
mz1958@yandex.ru

**VE Venezuela**
Somerinca C.A.
Quinta Sagrado Corazon
de Jesus -
3ra Transversal -
Los Dos Caminos,
Caracas 1070 - A
Phone +58 212 2352748
Fax +58 212 2399341
klocmoeller@cantv.net
www.kmsomerinca.com.ve

**VN Vietnam**
AUMI Co., Ltd
E1, La Thanh Hotel,
218 Doi Can Street,
Lieu Giai Ward, Ba Dinh District,
Hanoi City
Phone +84 4762 8601
Fax +84 4266 1391
aumi@aumi.com.vn

Linh Kim Hai Co,. Ltd
78 Hoa Cuc Street Ward 7,
Phu Bhuan District,
Ho Chi Minh City
Phone +84 8517 1717
Fax +84 8517 1818
lkh@linhkimhai.com.vn

**ZA South Africa**
Phambili Interface (Pty) Ltd
P.O. Box 193,
1609 Johannesburg
5 Bundo Road, Sebenza
1610 Johannesburg,
Endenvale
Phone +27 11 452 1930
Fax +27 11 452 6455
sales@radinterface.co.za
www.radinterface.co.za

**DE Other countries**
Weidmüller Interface GmbH
& Co. KG
Postfach 3030
32720 Detmold
Klingenbergstraße 16
32758 Detmold
Phone +49 5231 14-0
Fax +49 5231 14-292083
info@weidmueller.de
www.weidmueller.com

We cannot guarantee that there are no mistakes in the publications or software provided by us to the customer for the purpose of making orders. We try our best to quickly correct errors in our printed media.

All orders are based on our general terms of delivery, which can be reviewed on the websites of our group companies where you place your order. On demand we can also send the general terms of delivery to you.

**Weidmüller – Partner in Industrial Connectivity**

As experienced experts we support our customers and partners around the world with products, solutions and services in the industrial environment of power, signal and data. We are at home in their industries and markets and know the technological challenges of tomorrow. We are therefore continuously developing innovative, sustainable and useful solutions for their individual needs. Together we set standards in Industrial Connectivity.

Weidmüller Interface GmbH & Co. KG
Klingenbergstraße 16
32758 Detmold, Germany
T +49 5231 14-0
F +49 5231 14-292083
info@weidmueller.com
www.weidmueller.com

4 050118 224597

Order number: 1420920000/03/2013/SMDM

Компания «ЭлектроПласт» предлагает заключение долгосрочных отношений при поставках импортных электронных компонентов на взаимовыгодных условиях!

Наши преимущества:

- Оперативные поставки широкого спектра электронных компонентов отечественного и импортного производства напрямую от производителей и с крупнейших мировых складов;
- Поставка более 17-ти миллионов наименований электронных компонентов;
- Поставка сложных, дефицитных, либо снятых с производства позиций;
- Оперативные сроки поставки под заказ (от 5 рабочих дней);
- Экспресс доставка в любую точку России;
- Техническая поддержка проекта, помощь в подборе аналогов, поставка прототипов;
- Система менеджмента качества сертифицирована по Международному стандарту ISO 9001;
- Лицензия ФСБ на осуществление работ с использованием сведений, составляющих государственную тайну;
- Поставка специализированных компонентов (Xilinx, Altera, Analog Devices, Intersil, Interpoint, Microsemi, Aeroflex, Peregrine, Syfer, Eurofarad, Texas Instrument, Miteq, Cobham, E2V, MA-COM, Hittite, Mini-Circuits,General Dynamics и др.);

Помимо этого, одним из направлений компании «ЭлектроПласт» является направление «Источники питания». Мы предлагаем Вам помощь Конструкторского отдела:

- Подбор оптимального решения, техническое обоснование при выборе компонента;
- Подбор аналогов;
- Консультации по применению компонента;
- Поставка образцов и прототипов;
- Техническая поддержка проекта;
- Защита от снятия компонента с производства.

**Как с нами связаться**

**Телефон:** 8 (812) 309 58 32 (многоканальный)
**Факс:** 8 (812) 320-02-42
**Электронная почта:** org@eplast1.ru
**Адрес:** 198099, г. Санкт-Петербург, ул. Калинина, дом 2, корпус 4, литера А.