Serial EEPROM Series Standard EEPROM

I²C BUS EEPROM (2-Wire)

BR24G04-3

General Description

BR24G04-3 is a serial EEPROM of I²C BUS Interface Method

Features

- Completely conforming to the world standard I²C BUS.
  All controls available by 2 ports of serial clock (SCL) and serial data (SDA)
- Other devices than EEPROM can be connected to the same port, saving microcontroller port
- 1.6V to 5.5V Single Power Source Operation most suitable for battery use
- 1.6V to 5.5V wide limit of operating voltage, possible FAST MODE 400kHz operation
- Page Write Mode useful for initial value write at factory shipment
- Self-timed Programming Cycle
- Low Current Consumption
- Prevention of Write Mistake
  - Write (Write Protect) Function added
  - Prevention of Write Mistake at Low Voltage
- More than 1 million write cycles
- More than 40 years data retention
- Noise filter built in SCL / SDA terminal
- Initial delivery state FFh

Packages W(Typ) x D(Typ) x H(Max)

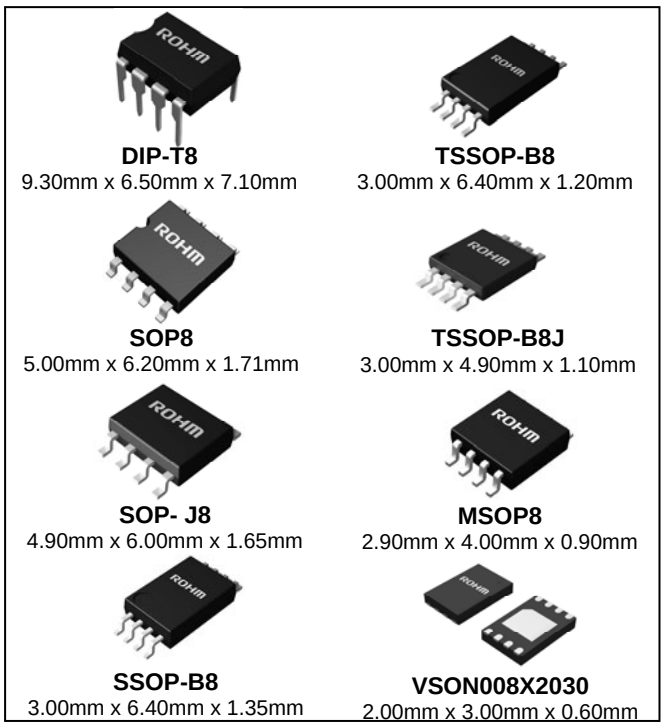

Figure 1.

BR24G04-3

Capacity	Bit Format	Type	Power Source Voltage	Package
4Kbit	512×8	BR24G04-3	1.6V to 5.5V	DIP-T8
		BR24G04F-3		SOP8
		BR24G04FJ-3		SOP-J8
		BR24G04FV-3		SSOP-B8
		BR24G04FVT-3		TSSOP-B8
		BR24G04FVJ-3		TSSOP-B8J
		BR24G04FVM-3		MSOP8
		BR24G04NUX-3		VSON008X2030

○Product structure : Silicon monolithic integrated circuit ○This product has no designed protection against radioactive rays

©2013 ROHM Co., Ltd. All rights reserved.

Absolute Maximum Ratings (Ta=25℃)

Parameter	Symbol	Rating	Unit	Remark
Supply Voltage	V_{CC}	-0.3 to +6.5	V	
Power Dissipation	Pd	450 (SOP8)	mW	Derate by 4.5mW/°C when operating above Ta=25°C
		450 (SOP-J8)		Derate by 4.5mW/°C when operating above Ta=25°C
		300 (SSOP-B8)		Derate by 3.0mW/°C when operating above Ta=25°C
		330 (TSSOP-B8)		Derate by 3.3mW/°C when operating above Ta=25°C
		310 (TSSOP-B8J)		Derate by 3.1mW/°C when operating above Ta=25°C
		310 (MSOP8)		Derate by 3.1mW/°C when operating above Ta=25°C
		300 (VSON008X2030)		Derate by 3.0mW/°C when operating above Ta=25°C
		800 (DIP-T8)		Derate by 8.0mW/°C when operating above Ta=25°C
Storage Temperature	Tstg	-65 to +150	℃	
Operating Temperature	Topr	-40 to +85	℃	
Input Voltage / Output Voltage	-	-0.3 to Vcc+1.0	V	The Max value of Input Voltage/Output Voltage is not over 6.5V. When the pulse width is 50ns or less, the Min value of Input Voltage/Output Voltage is not lower than -0.8V.
Junction Temperature	Tjmax	150	℃	Junction temperature at the storage condition
Electrostatic discharge voltage (human body model)	V_{ESD}	-4000 to +4000	V	

Memory Cell Characteristics (Ta=25℃, V_{CC}=1.6V to 5.5V)

Parameter	Limit			Unit
	Min	Typ	Max	
Write Cycles (1)	1,000,000	-	-	Times
Data Retention (1)	40	-	-	Years

(1) Not 100% TESTED

Recommended Operating Ratings

Parameter	Symbol	Rating	Unit
Power Source Voltage	V_{CC}	1.6 to 5.5	V
Input Voltage	V_{IN}	0 to V_{cc}	

DC Characteristics (Unless otherwise specified, Ta=-40℃ to +85℃, V_{CC}=1.6V to 5.5V)

Parameter	Symbol	Limit			Unit	Conditions
		Min	Typ	Max		
Input High Voltage1	V_{IH1}	$0.7V_{cc}$	-	V_{cc}+1.0	V	1.7V≦V_{cc}≦5.5V
Input Low Voltage1	V_{IL1}	-0.3(2)	-	$+0.3V_{cc}$	V	1.7V≦V_{cc}≦5.5V
Input High Voltage2	V_{IH2}	$0.8V_{cc}$	-	V_{cc}+1.0	V	1.6V≦V_{cc}＜1.7V
Input Low Voltage2	V_{IL2}	-0.3(2)	-	$+0.2V_{cc}$	V	1.6V≦V_{cc}＜1.7V
Output Low Voltage1	V_{OL1}	-	-	0.4	V	I_{OL}=3.0mA, 2.5V≦V_{CC}≦5.5V (SDA)
Output Low Voltage2	V_{OL2}	-	-	0.2	V	I_{OL}=0.7mA, 1.6V≦V_{CC}＜2.5V (SDA)
Input Leakage Current	I_{LI}	-1	-	+1	μA	V_{IN}=0 to V_{cc}
Output Leakage Current	I_{LO}	-1	-	+1	μA	V_{OUT}=0 to V_{cc} (SDA)
Supply Current (Write)	I_{CC1}	-	-	2.0	mA	V_{cc}=5.5V, f_{SCL}=400kHz, t_{WR}=5ms, Byte write, Page write
Supply Current (Read)	I_{CC2}	-	-	0.5	mA	V_{cc}=5.5V, f_{SCL}=400kHz Random read, current read, sequential read
Standby Current	I_{SB}	-	-	2.0	μA	V_{cc}=5.5V, SDA・SCL=V_{cc} A0,A1,A2=GND,WP=GND

(2) When the pulse width is 50ns or less, it is -0.8V.

©2013 ROHM Co., Ltd. All rights reserved.

AC Characteristics (Unless otherwise specified, Ta=-40℃ to +85℃, Vcc=1.6V to 5.5V)

Parameter	Symbol	Limit			Unit
		Min	Typ	Max	
Clock Frequency	f_{SCL}	-	-	400	kHz
Data Clock High Period	t_{HIGH}	0.6	-	-	µs
Data Clock Low Period	t_{LOW}	1.2	-	-	µs
SDA, SCL (INPUT) Rise Time (1)	t_R	-	-	1.0	µs
SDA, SCL (INPUT) Fall Time (1)	t_{F1}	-	-	1.0	µs
SDA (OUTPUT) Fall Time (1)	t_{F2}	-	-	0.3	µs
Start Condition Hold Time	$t_{HD:STA}$	0.6	-	-	µs
Start Condition Setup Time	$t_{SU:STA}$	0.6	-	-	µs
Input Data Hold Time	$t_{HD:DAT}$	0	-	-	ns
Input Data Setup Time	$t_{SU:DAT}$	100	-	-	ns
Output Data Delay Time	t_{PD}	0.1	-	0.9	µs
Output Data Hold Time	t_{DH}	0.1	-	-	µs
Stop Condition Setup Time	$t_{SU:STO}$	0.6	-	-	µs
Bus Free Time	t_{BUF}	1.2	-	-	µs
Write Cycle Time	t_{WR}	-	-	5	ms
Noise Spike Width (SDA and SCL)	t_I	-	-	0.1	µs
WP Hold Time	$t_{HD:WP}$	1.0	-	-	µs
WP Setup Time	$t_{SU:WP}$	0.1	-	-	µs
WP High Period	$t_{HIGH:WP}$	1.0	-	-	µs

(1) Not 100% TESTED.

Condition Input data level: $V_{IL}=0.2\times V_{cc}$ $V_{IH}=0.8\times V_{cc}$
Input data timing reference level: $0.3\times V_{cc}/0.7\times V_{cc}$
Output data timing reference level: $0.3\times V_{cc}/0.7\times V_{cc}$
Rise/Fall time : ≦20ns

Serial Input / Output Timing

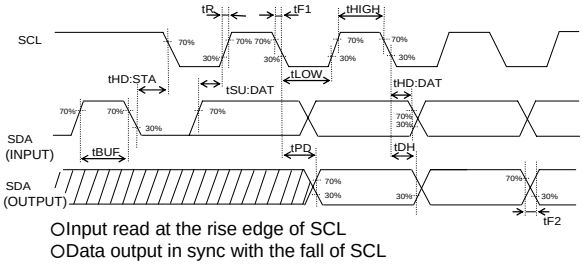

Figure 2-(a). Serial Input / Output Timing

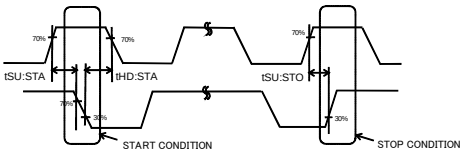

Figure 2-(b). Start-Stop Bit Timing

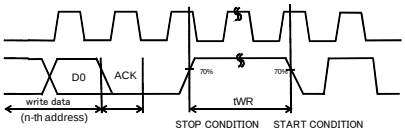

Figure 2-(c). Write Cycle Timing

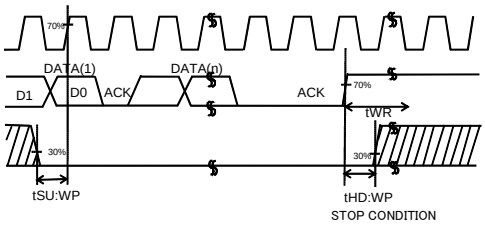

Figure 2-(d). WP Timing at Write Execution

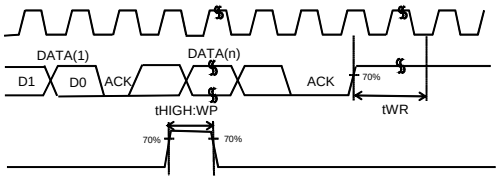

Figure 2-(e). WP Timing at Write Cancel

©2013 ROHM Co., Ltd. All rights reserved.

Block Diagram

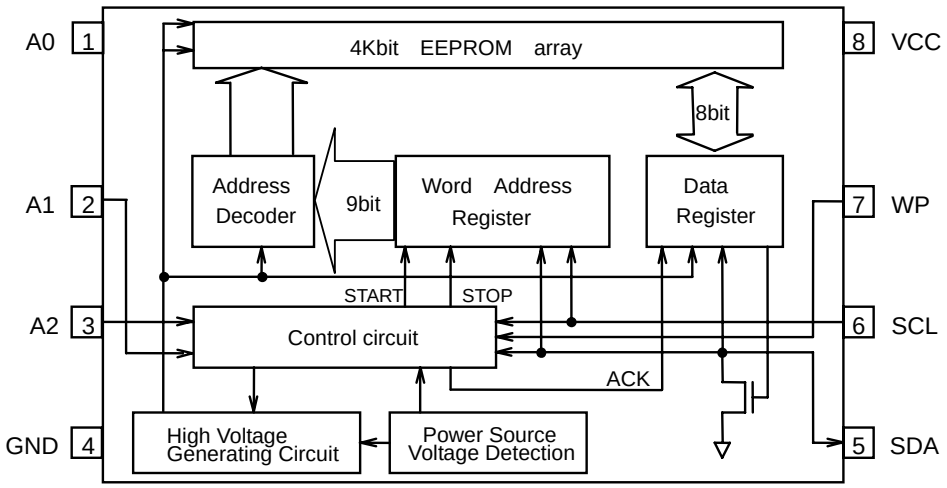

Figure 3. Block Diagram

Pin Configuration

(TOP VIEW)

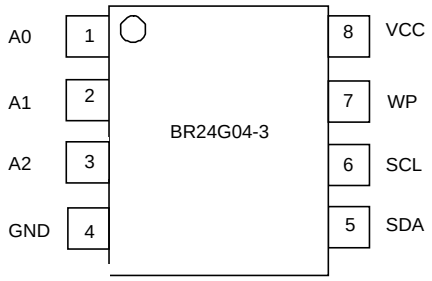

Pin Descriptions

Terminal Name	Input/ Output	Descriptions
A0	-	Don't use(1)
A1	Input	Slave address setting(2)
A2	Input	Slave address setting(2)
GND	-	Reference voltage of all input / output, 0V
SDA	Input/ output	Serial data input serial data output
SCL	Input	Serial clock input
WP	Input	Write protect terminal
VCC	-	Connect the power source.

(1) Pins not used as device address may be set to any of 'H', 'L', and 'Hi-Z'.
(2) A1 and A2 are not allowed to use as open.

©2013 ROHM Co., Ltd. All rights reserved.

Typical Performance Curves

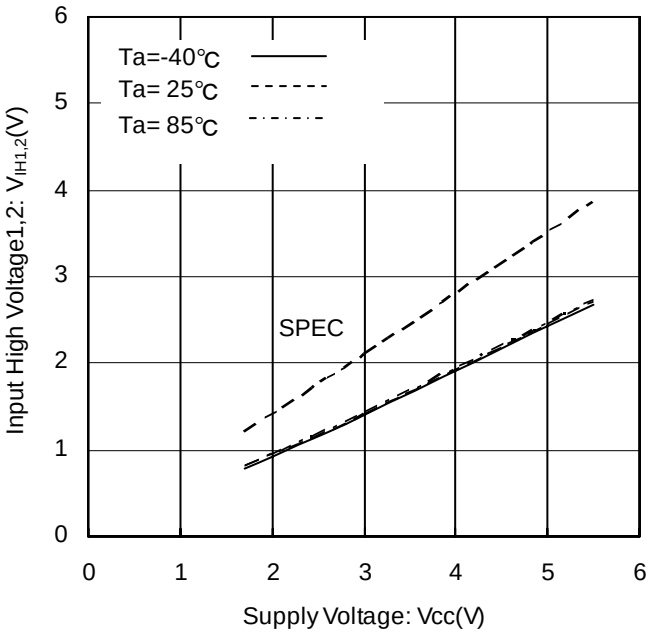

Figure 4. Input High Voltage1,2 vs Supply Voltage
(A1, A2, SCL, SDA, WP)

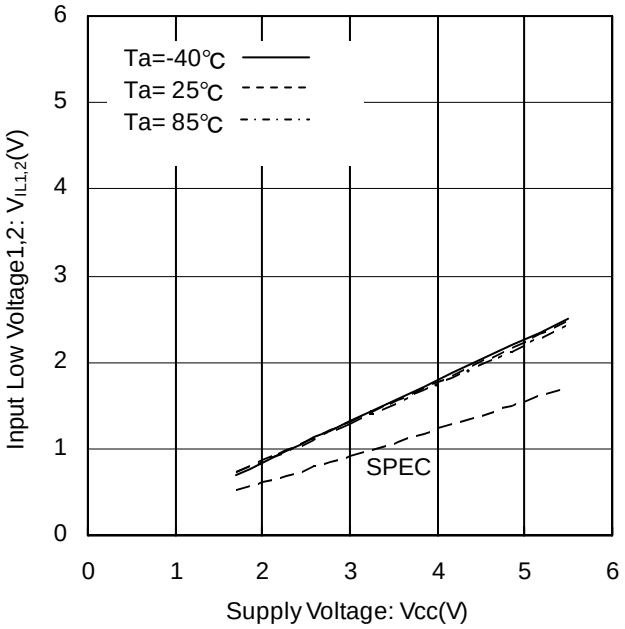

Figure 5. Input Low Voltage1,2 vs Supply Voltage
(A1, A2, SCL, SDA, WP)

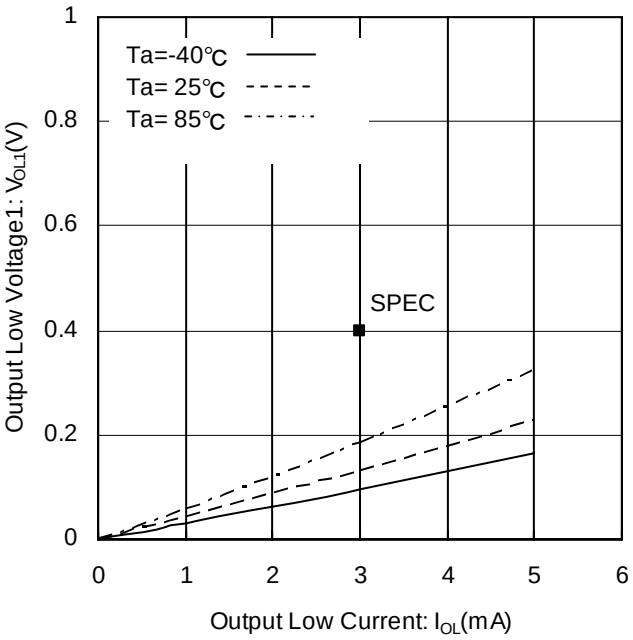

Figure 6. Output Low Voltage1 vs Output Low Current
(Vcc=2.5V)

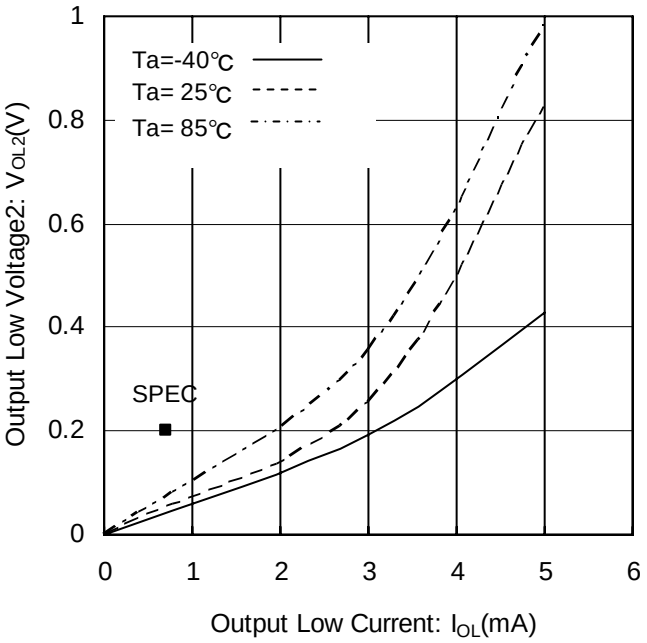

Figure 7. Output Low Voltage2 vs Output Low Current
(Vcc=1.6V)

©2013 ROHM Co., Ltd. All rights reserved.

Typical Performance Curves - continued

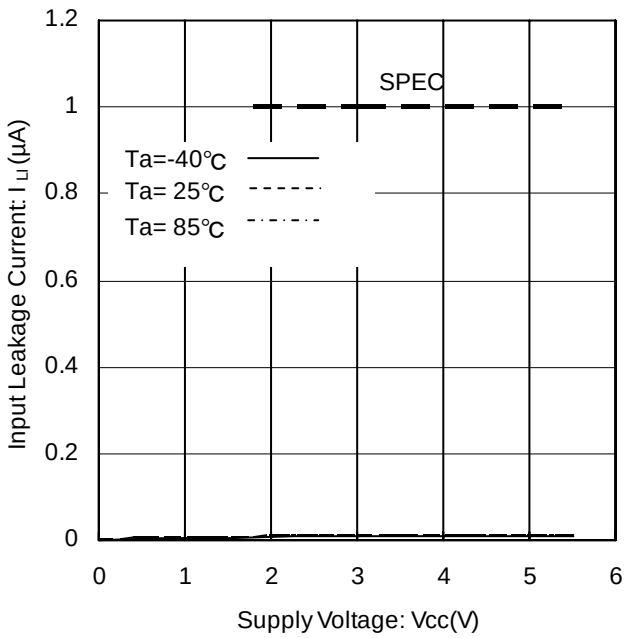

Figure 8. Input Leakage Current vs Supply Voltage (A1, A2, SCL, WP)

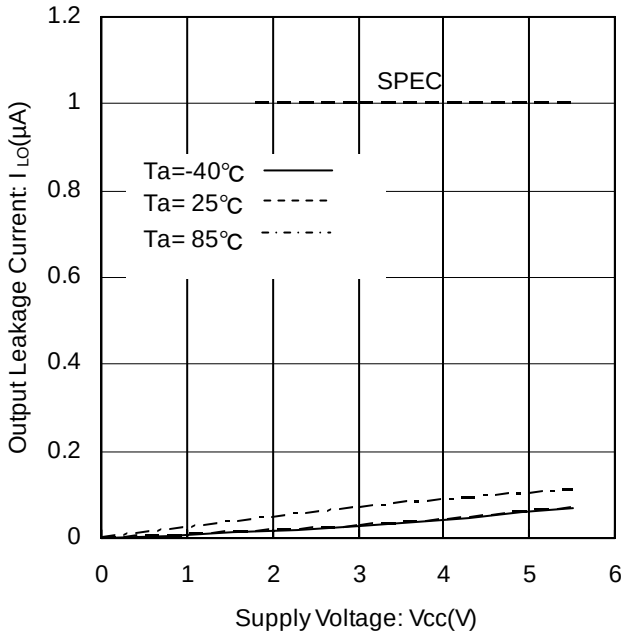

Figure 9. Output Leakage Current vs Supply Voltage (SDA)

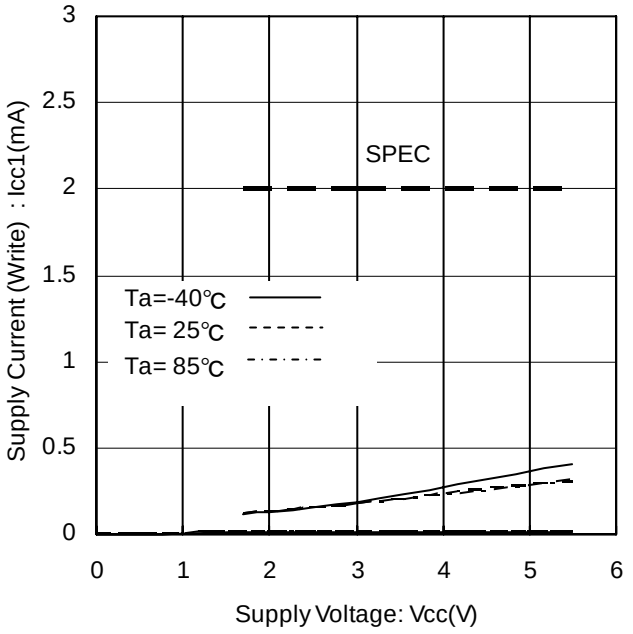

Figure 10. Supply Current (Write) vs Supply Voltage (f_{SCL}=400kHz)

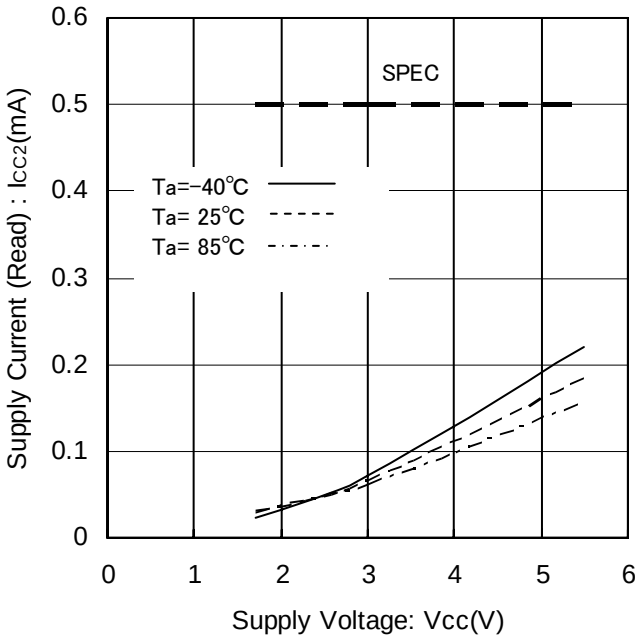

Figure 11. Supply Current (Read) vs Supply Voltage (f_{SCL}=400kHz)

©2013 ROHM Co., Ltd. All rights reserved.

Typical Performance Curves - continued

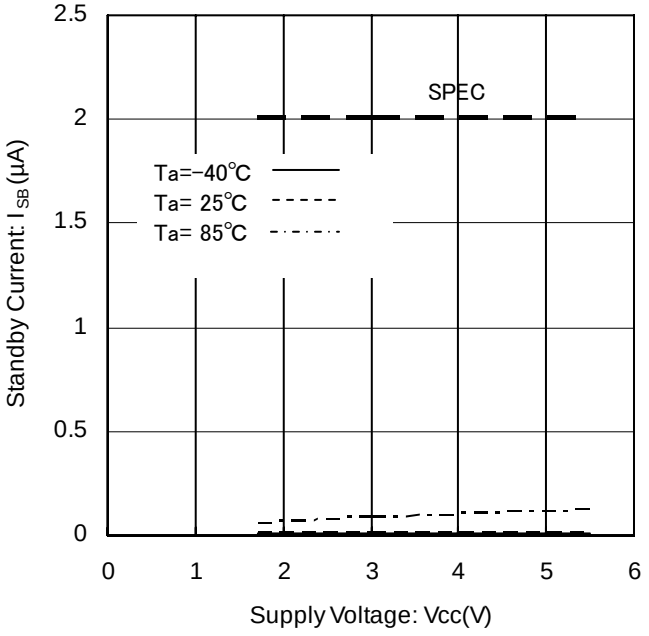

Figure 12. Standby Current vs Supply Voltage

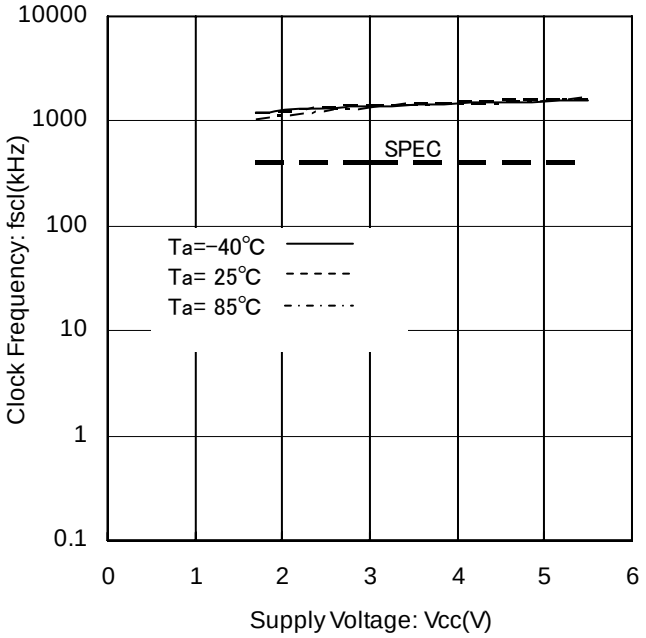

Figure 13. Clock Frequency vs Supply Voltage

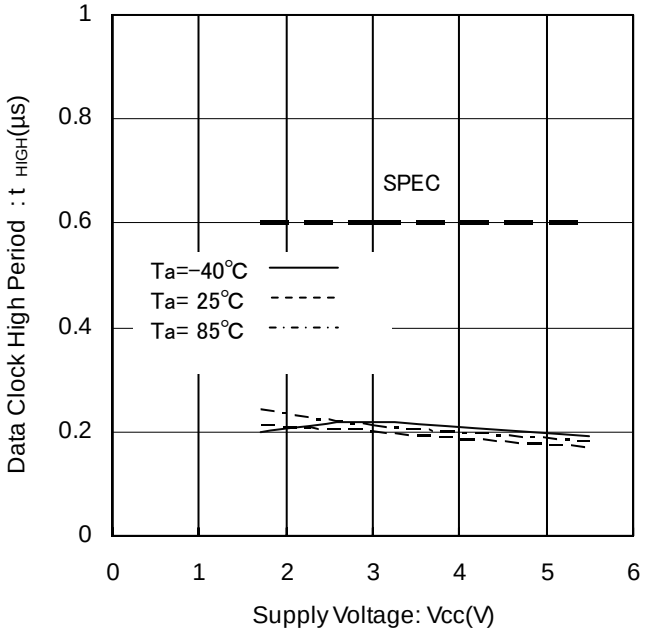

Figure 14. Data Clock High Period vs Supply Voltage

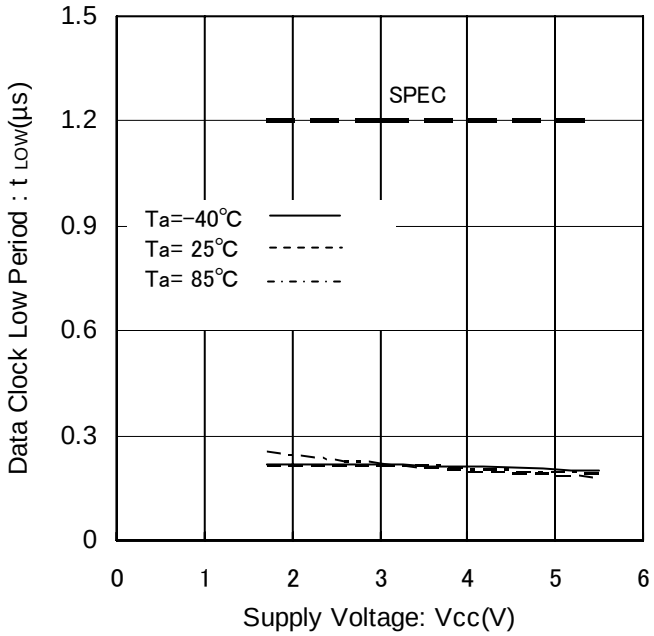

Figure 15. Data Clock Low Period vs Supply Voltage

©2013 ROHM Co., Ltd. All rights reserved.

Typical Performance Curves - continued

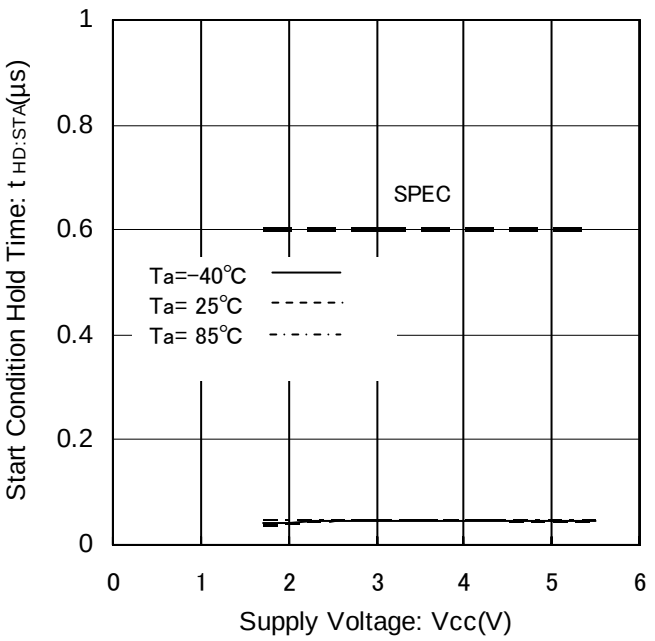

Figure 16. Start Condition Hold Time vs Supply Voltage

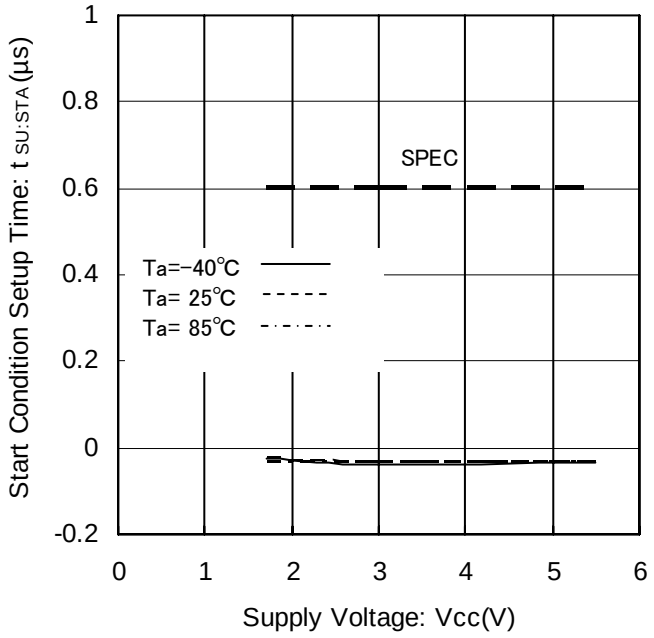

Figure 17. Start Condition Setup Time vs Supply Voltage

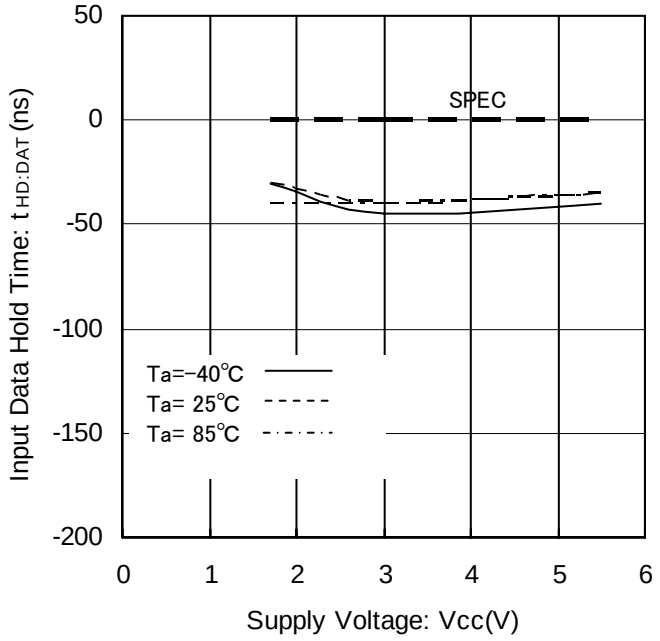

Figure 18. Input Data Hold Time vs Supply Voltage (HIGH)

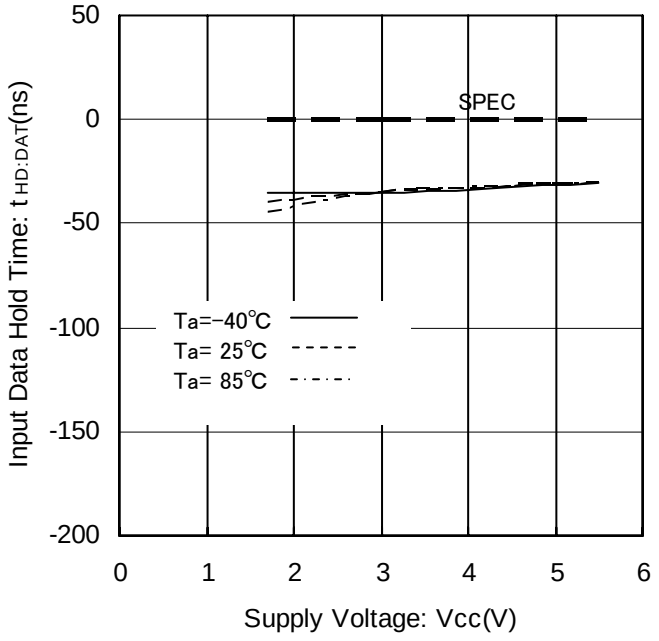

Figure 19. Input Data Hold Time vs Supply Voltage (LOW)

©2013 ROHM Co., Ltd. All rights reserved.

Typical Performance Curves - continued

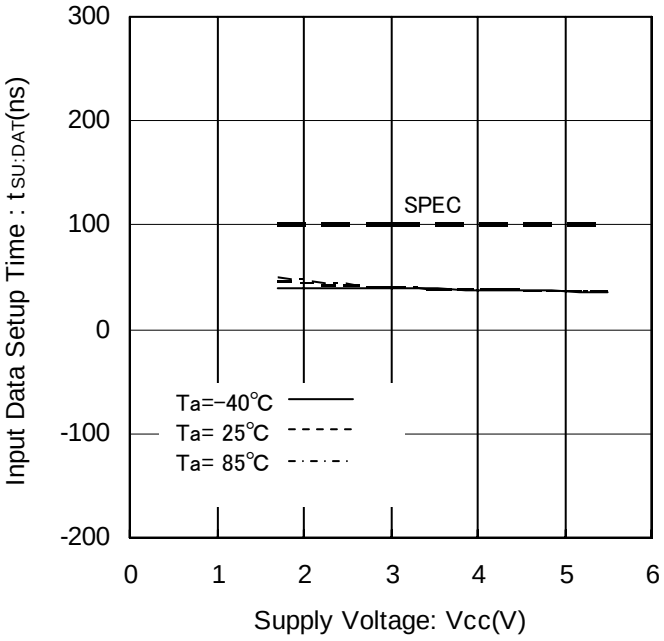

Figure 20. Input Data Setup Time vs Supply Voltage (HIGH)

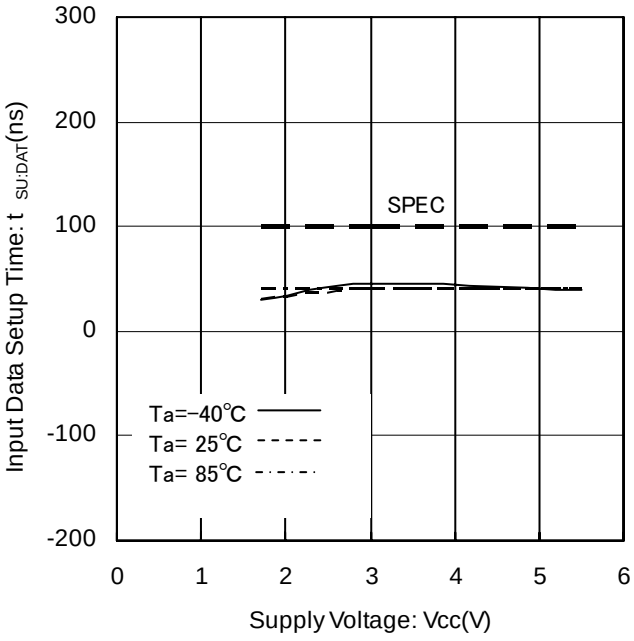

Figure 21. Input Data Setup Time vs Supply Voltage (LOW)

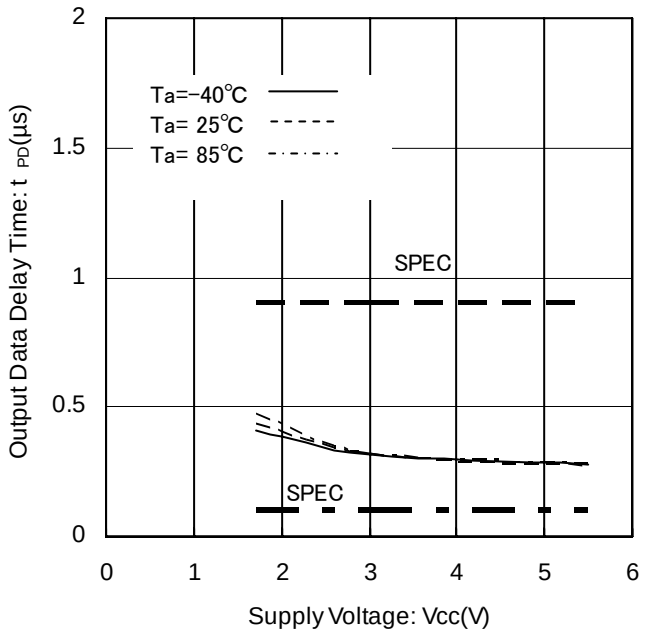

Figure 22. Output Data Delay Time vs Supply Voltage (LOW)

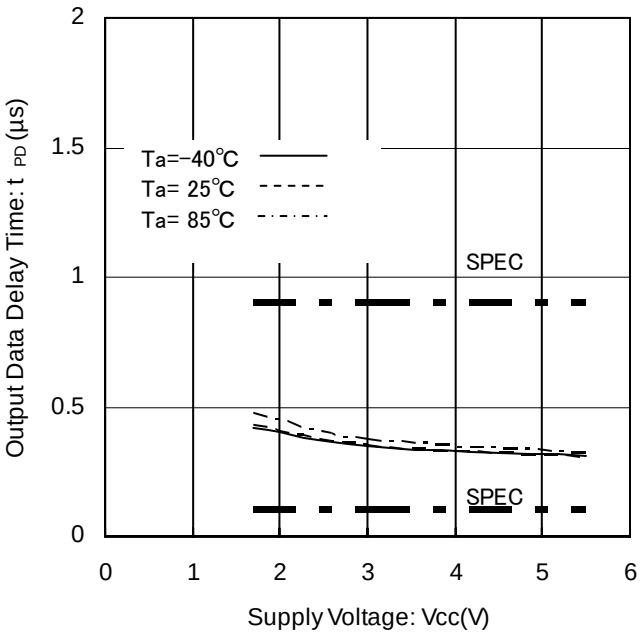

Figure 23. Output Data Delay Time vs Supply Voltage (HIGH)

©2013 ROHM Co., Ltd. All rights reserved.

Typical Performance Curves - continued

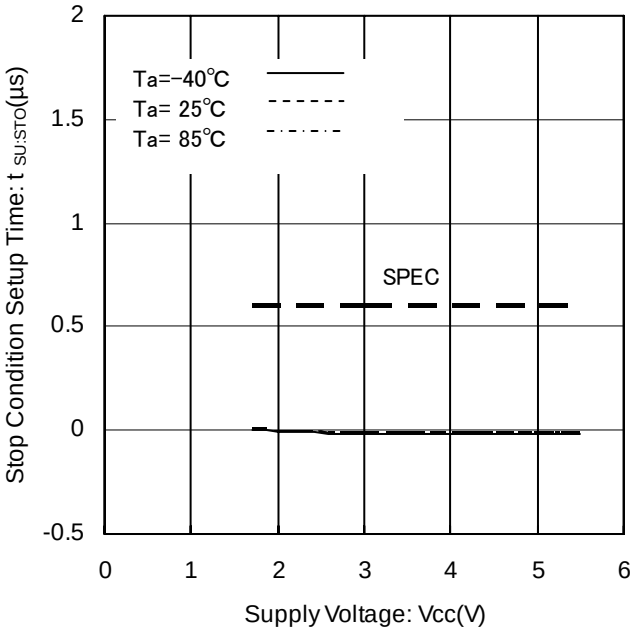

Figure 24. Stop Condition Setup Time vs Supply Voltage

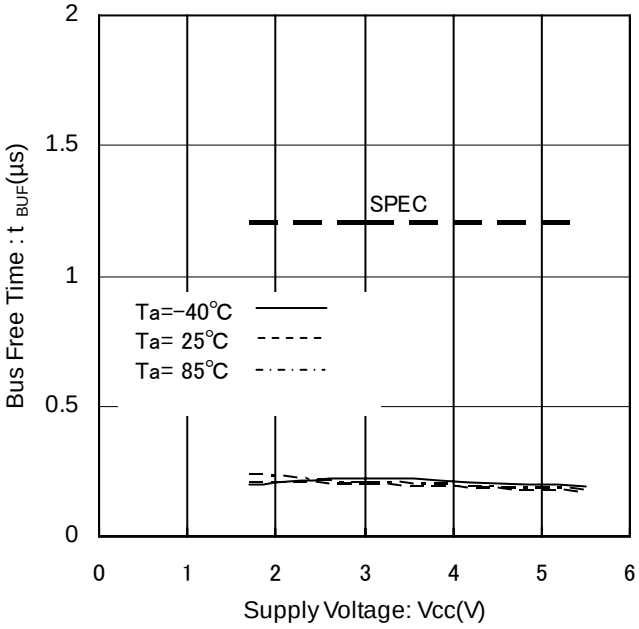

Figure 25. Bus Free Time vs Supply Voltage

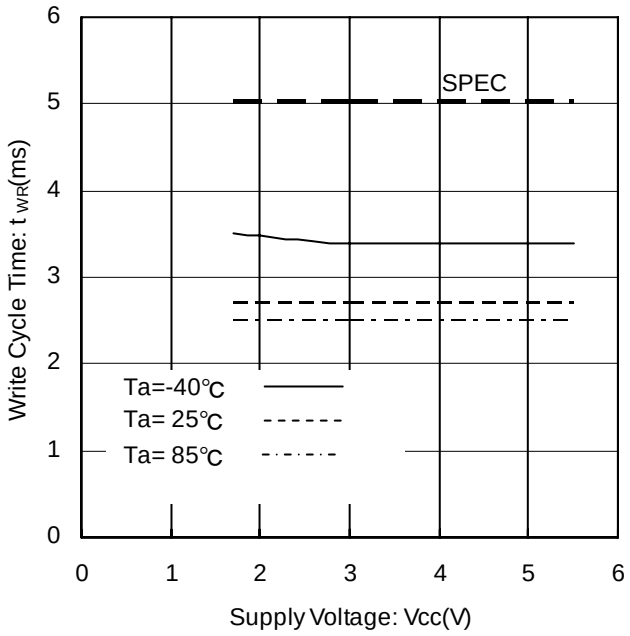

Figure 26. Write Cycle Time vs Supply Voltage

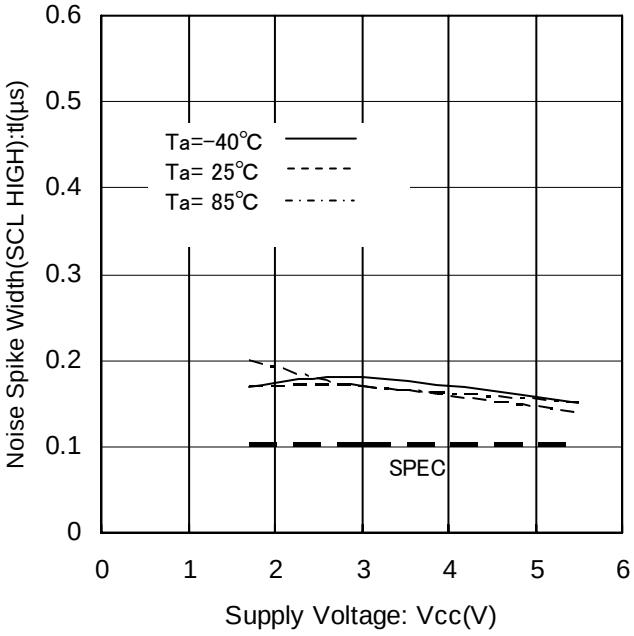

Figure 27. Noise Spike Width vs Supply Voltage (SCL HIGH)

©2013 ROHM Co., Ltd. All rights reserved.

Typical Performance Curves - continued

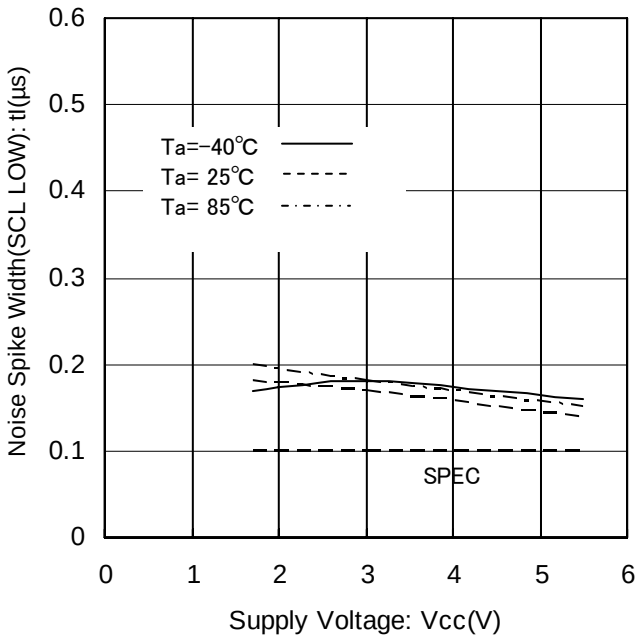

Figure 28. Noise Spike Width vs Supply Voltage (SCL LOW)

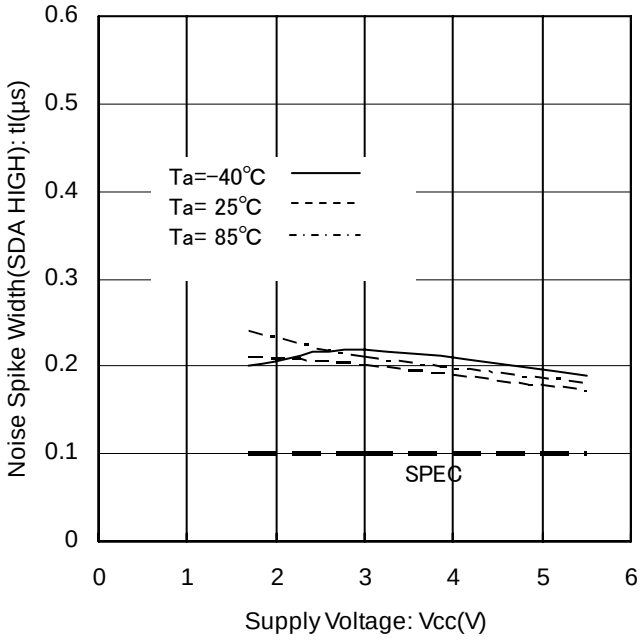

Figure 29. Noise Spike Width vs Supply Voltage (SDA HIGH)

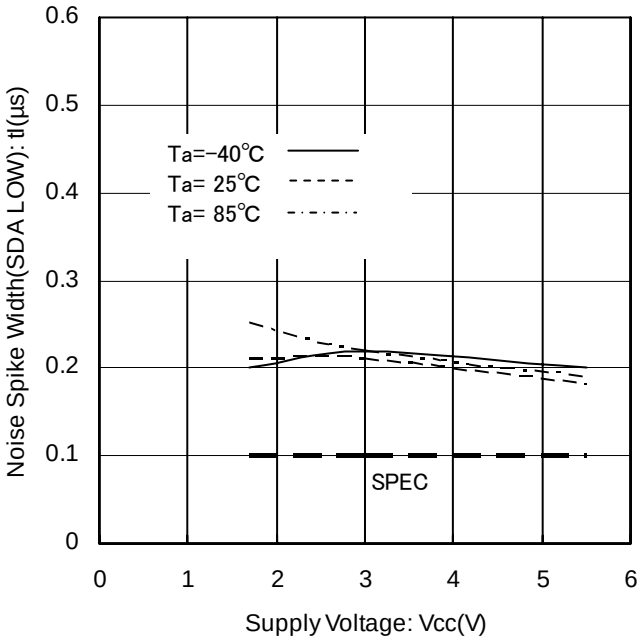

Figure 30. Noise Spike Width vs Supply Voltage (SDA LOW)

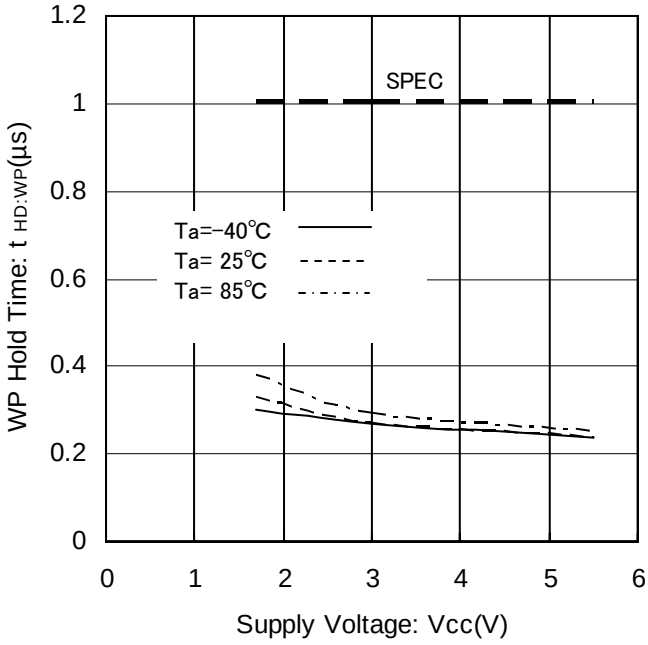

Figure 31. WP Hold Time vs Supply Voltage

©2013 ROHM Co., Ltd. All rights reserved.

Typical Performance Curves - continued

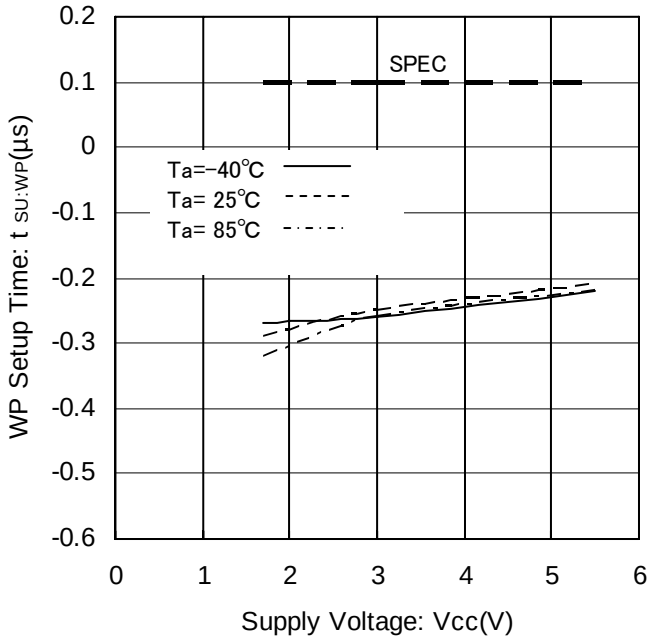

Figure 32. WP Setup Time vs Supply Voltage

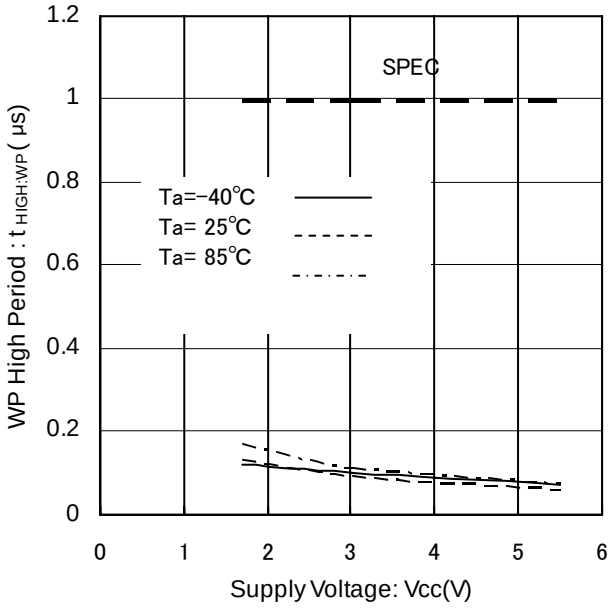

Figure 33. WP High Period vs Supply Voltage

©2013 ROHM Co., Ltd. All rights reserved.

Timing Chart

1. I²C BUS Data Communication

I²C BUS data communication starts by start condition input, and ends by stop condition input. Data is always 8bit long, and acknowledge is always required after each byte. I²C BUS data communication with several devices is possible by connecting with 2 communication lines: serial data (SDA) and serial clock (SCL).
Among the devices, there should be a “master” that generates clock and control communication start and end. The rest become “slave” which are controlled by an address peculiar to each device, like this EEPROM. The device that outputs data to the bus during data communication is called “transmitter”, and the device that receives data is called “receiver”.

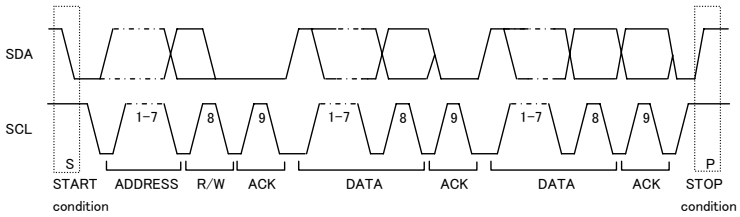

Figure 34. Data Transfer Timing

2. Start Condition (Start Bit Recognition)

(1) Before executing each command, start condition (start bit) where SDA goes from 'HIGH' down to 'LOW' when SCL is 'HIGH' is necessary.
(2) This IC always detects whether SDA and SCL are in start condition (start bit) or not, therefore, unless this condition is satisfied, any command cannot be executed.

3. Stop Condition (Stop Bit Recognition)

(1) Each command can be ended by a stop condition (stop bit) where SDA goes from 'LOW' to 'HIGH' while SCL is 'HIGH'.

4. Acknowledge (ACK) Signal

(1) The acknowledge (ACK) signal is a software rule to show whether data transfer has been made normally or not. In a master-slave communication, the device (Ex. µ-COM sends slave address input for write or read command, to this IC) at the transmitter (sending) side releases the bus after output of 8bit data.
(2) The device (Ex. This IC receives the slave address input for write or read command from the µ-COM) at the receiver (receiving) side sets SDA 'LOW' during the 9th clock cycle, and outputs acknowledge signal (ACK signal) showing that it has received the 8bit data.
(3) This IC, after recognizing start condition and slave address (8bit), outputs acknowledge signal (ACK signal) 'LOW'.
(4) After receiving 8bit data (word address and write data) during each write operation, this IC outputs acknowledge signal (ACK signal) 'LOW'..
(5) During read operation, this IC outputs 8bit data (read data) and detects acknowledge signal (ACK signal) 'LOW'. When acknowledge signal (ACK signal) is detected, and stop condition is not sent from the master (µ-COM) side, this IC continues to output data. When acknowledge signal (ACK signal) is not detected, this IC stops data transfer, recognizes stop condition (stop bit), and ends read operation. Then this IC becomes ready for another transmission.

5. Device Addressing

(1) Slave address comes after start condition from master.
(2) The significant 4 bits of slave address are used for recognizing a device type.
The device code of this IC is fixed to '1010'.
(3) Next slave addresses (A2 A1 --- device address) are for selecting devices, and plural ones can be used on a same bus according to the number of device addresses.
(4) The most insignificant bit ($R/\overline{W}$ --- READ/$\overline{\text{WRITE}}$) of slave address is used for designating write or read operation, and is as shown below.

Setting $R/\overline{W}$ to 0 ------- write (setting 0 to word address setting of random read)
Setting $R/\overline{W}$ to 1 ------- read

Slave Address	Maximum number of Connected buses
1 0 1 0 A2 A1 P0 $R/\overline{W}$	4

P0 is page select bit.

©2013 ROHM Co., Ltd. All rights reserved.

Write Command

1. Write Cycle

(1) Arbitrary data can be written to this EEPROM. When writing only 1 byte, Byte Write is normally used, and when writing continuous data of 2 bytes or more, simultaneous write is possible by Page Write cycle. The maximum number of bytes is specified per device of each capacity. Up to 16 arbitrary bytes can be written.

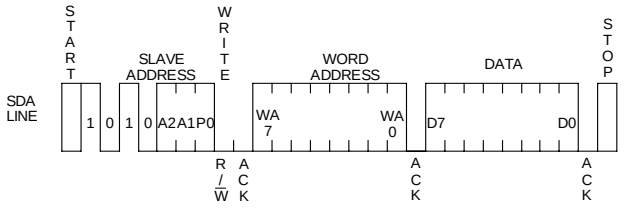

Figure 35. Byte Write Cycle

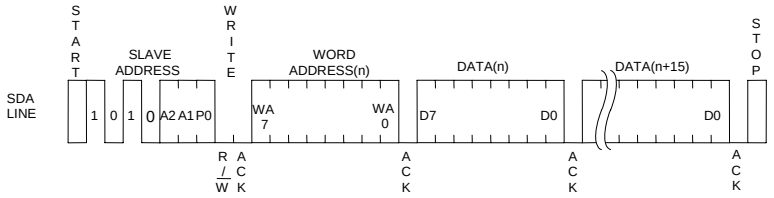

Figure 36. Page Write Cycle

(2) During internal write execution, all input commands are ignored, therefore ACK is not returned.
(3) Data is written to the address designated by word address (n-th address)
(4) By issuing stop bit after 8bit data input, internal write to memory cell starts.
(5) When internal write is started, command is not accepted for t_{WR} (5ms at maximum).
(6) Using page write cycle, writing in bulk is done as follows: When data of more than 16 bytes is sent, the bytes in excess overwrite the data already sent first.
(Refer to "Internal Address Increment".)
(7) As for page write cycle of BR24G04-3 where 2 or more bytes of data is intended to be written, after page select bit 'P0' of slave address are designated arbitrarily, only the value of 4 least significant bits in the address is incremented internally, so that data up to 16 bytes of memory only can be written.

In the case BR24G04-3, 1 page=16bytes, but the page write cycle time is 5ms at maximum for 16byte bulk write. It does not stand 5ms at maximum × 16byte=80ms (max).

2. Internal Address Increment

Page write mode (in the case of BR24G04-3)

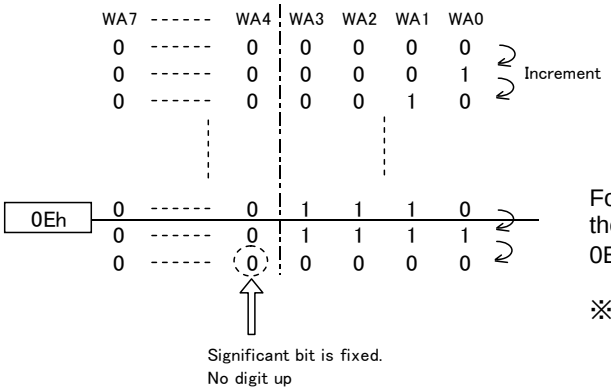

For example, when it is started from address 0Eh, then, increment is made as below,
0Eh→0Fh→00h→01h・・・ please take note.

※0Eh・・・0E in hexadecimal, therefore,
00001110 becomes a binary number.

3. Write Protect (WP) Terminal

Write Protect (WP) Function

When WP terminal is set at Vcc (H level), data rewrite of all addresses is prohibited. When it is set at GND (L level), data rewrite of all address is enabled. Be sure to connect this terminal to Vcc or GND, or control it to H level or L level. Do not leave it open.

In case of using it as ROM, it is recommended to connect it to pull up or Vcc. At extremely low voltage at power ON / OFF, by setting the WP terminal 'H', write error can be prevented.

©2013 ROHM Co., Ltd. All rights reserved.

Read Command

1. Read Cycle

Read cycle is when data of EEPROM is read. Read cycle could be random read cycle or current read cycle. Random read cycle is a command to read data by designating a specific address, and is used generally. Current read cycle is a command to read data of internal address register without designating an address, and is used when to verify just after write cycle. In both the read cycles, sequential read cycle is available where the next address data can be read in succession.

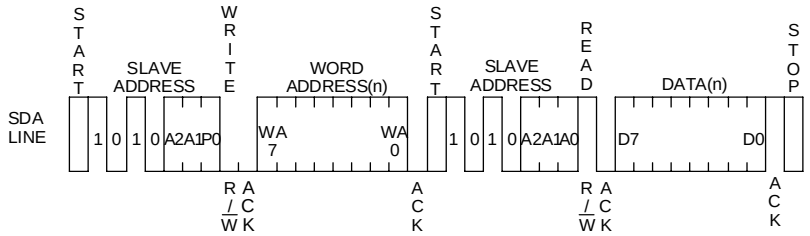

Figure 37. Random Read Cycle

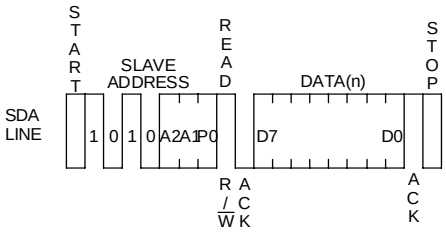

Figure 38. Current Read Cycle

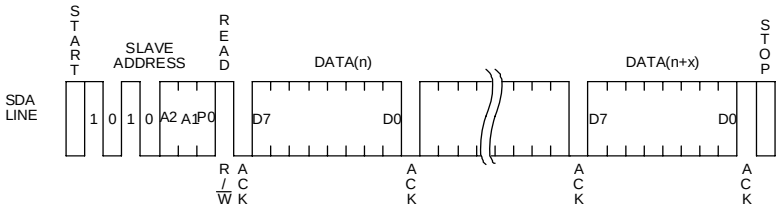

Figure 39. Sequential Read Cycle (in the case of Current Read Cycle)

(1) In random read cycle, data of designated word address can be read.
(2) When the command just before current read cycle is random read cycle, current read cycle (each including sequential read cycle), data of incremented last read address (n)-th , i.e., data of the (n+1)-th address is output.
(3) When ACK signal 'LOW' after D0 is detected, and stop condition is not sent from master (µ-COM) side, the next address data can be read in succession.
(4) Read cycle is ended by stop condition where 'H' is input to ACK signal after D0 and SDA signal goes from ‘L’ to ‘H’ while SCL signal is 'H' .
(5) When 'H' is not input to ACK signal after D0, sequential read gets in, and the next data is output.
Therefore, read command cycle cannot be ended. To end the read command cycle, be sure to input 'H' to ACK signal after D0, and the stop condition where SDA goes from ‘L’ to ‘H’ while SCL signal is 'H'.
(6) Sequential read is ended by stop condition where 'H' is input to ACK signal after arbitrary D0 and SDA is asserted from ‘L’ to ‘H’ while SCL signal is 'H'.

©2013 ROHM Co., Ltd. All rights reserved.

Software Reset

Software reset is executed to avoid malfunction after power on and during command input. Software reset has several kinds and 3 kinds of them are shown in the figure below. (Refer to Figure 40-(a), Figure 40-(b), and Figure 40-(c).) Within the dummy clock input area, the SDA bus is released ('H' by pull up) and ACK output and read data '0' (both 'L' level) may be output from EEPROM. Therefore, if 'H' is input forcibly, output may conflict and over current may flow, leading to instantaneous power failure of system power source or influence upon devices.

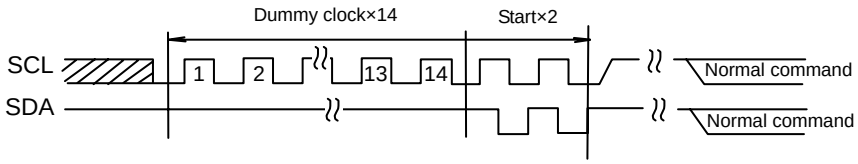

Figure 40-(a). The case of dummy clock×14 + START+START+ command input

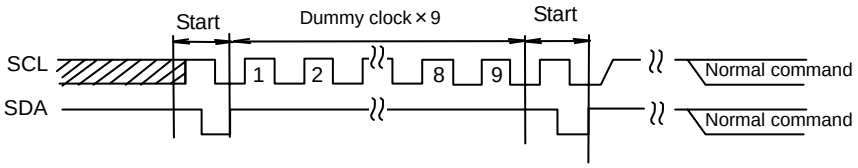

Figure 40-(b). The case of START + dummy clock×9 + START + command input

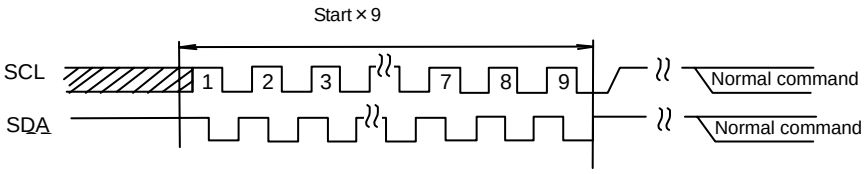

Figure 40-(c). START×9 + command input

※Start command from START input.

Acknowledge Polling

During internal write execution, all input commands are ignored, therefore ACK is not returned. During internal automatic write execution after write cycle input, next command (slave address) is sent. If the first ACK signal sends back 'L', then it means end of write operation, else 'H' is returned, which means writing is still in progress. By the use of acknowledge polling, next command can be executed without waiting for t_{WR} = 5ms.
To write continuously, R/$\overline{W}$ = 0, then to carry out current read cycle after write, slave address with R/$\overline{W}$ = 1 is sent. If ACK signal sends back 'L', then execute word address input and data output and so forth.

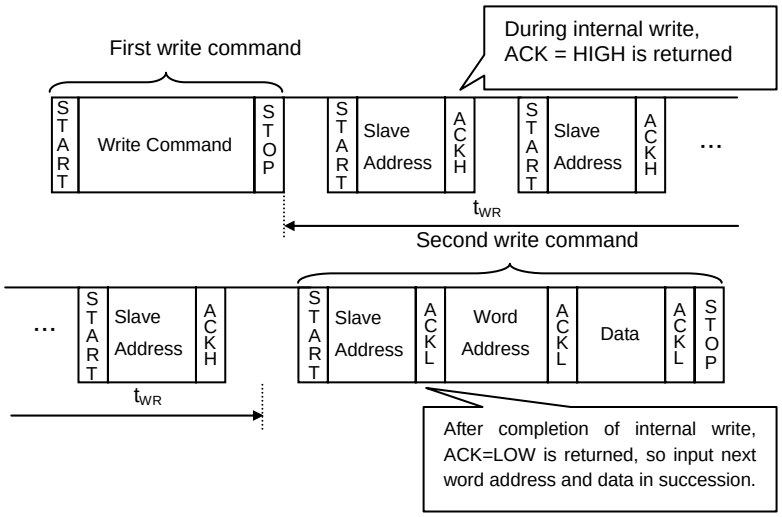

Figure 41. Case of Continuous Write by Acknowledge Polling

©2013 ROHM Co., Ltd. All rights reserved.

WP Valid Timing (Write Cancel)

WP is usually fixed to 'H' or 'L', but when WP is used to cancel write cycle and so on, pay attention to the following WP valid timing. During write cycle execution, inside cancel valid area, by setting WP='H', write cycle can be cancelled. In both byte write cycle and page write cycle, the area from the first start condition of command to the rise of clock to take in D0 of data(in page write cycle, the first byte data) is the cancel invalid area.
WP input in this area becomes ‘Don't care’. The area from the rise of SCL to take in D0 to the stop condition input is the cancel valid area. Furthermore, after the execution of forced end by WP, the IC enters standby status.

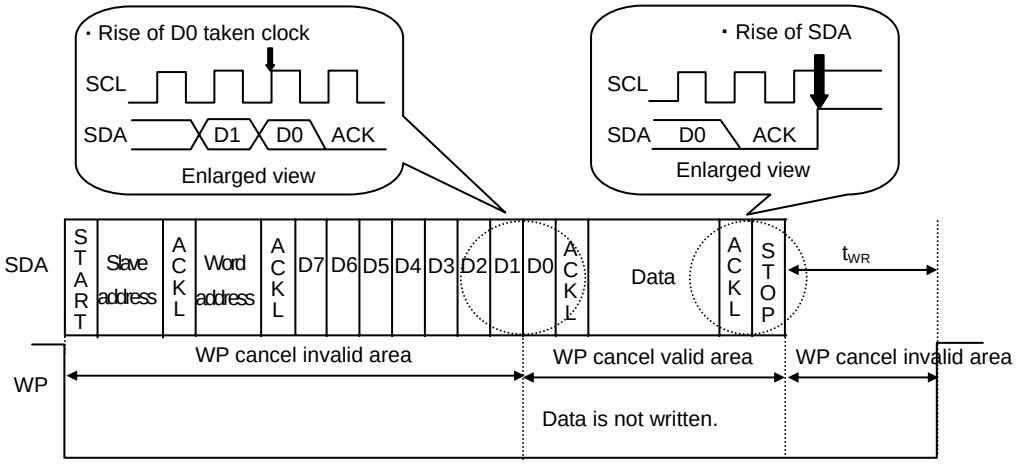

Figure 42. WP Valid Timing

Command Cancel by Start Condition and Stop Condition

During command input, by continuously inputting start condition and stop condition, command can be cancelled. (Figure 43.) However, within ACK output area and during data read, SDA bus may output 'L'. In this case, start condition and stop condition cannot be input, so reset is not available. Therefore, execute software reset. When command is cancelled by start-stop condition during random read cycle, sequential read cycle, or current read cycle, internal setting address is not determined. Therefore, it is not possible to carry out current read cycle in succession. To carry out read cycle in succession, carry out random read cycle.

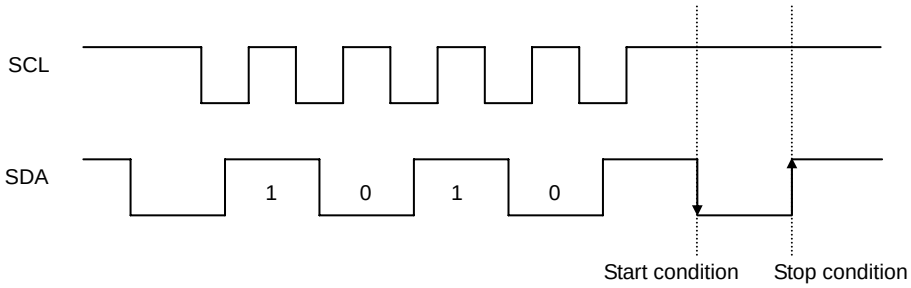

Figure 43. Case of cancel by start, stop condition during Slave Address Input

©2013 ROHM Co., Ltd. All rights reserved.

I/O Peripheral Circuit

1. Pull-Up Resistance of SDA Terminal

SDA is NMOS open drain, so it requires a pull up resistor. As for this resistance value (R_{PU}), select an appropriate value from microcontroller V_{IL}, I_L, and V_{OL}-I_{OL} characteristics of this IC. If R_{PU} is large, operating frequency is limited. The smaller the R_{PU}, the larger is the supply current (Read).

2. Maximum Value of R_{PU}

The maximum value of R_{PU} is determined by the following factors:

(1)SDA rise time to be determined by the capacitance (C_{BUS}) of bus line and R_{PU} of SDA should be t_R or lower. Furthermore, AC timing should be satisfied even when SDA rise time is slow.

(2)The bus' electric potential Ⓐ to be determined by the input current leak total (I_L) of the device connected to the bus with output of 'H' to the SDA line and R_{PU} should sufficiently secure the input 'H' level (V_{IH}) of microcontroller and EEPROM including recommended noise margin of 0.2Vcc.

$$V_{CC}-I_L R_{PU}-0.2\,V_{CC} \geqq V_{IH}$$

$$\therefore\ R_{PU} \leqq \frac{0.8V_{CC}-V_{IH}}{I_L}$$

Ex.) V_{cc} =3V I_L=10μA V_{IH}=0.7 V_{cc}

From (2)

$$R_{PU} \leqq \frac{0.8\times 3-0.7\times 3}{10\times 10^{-6}}$$

$$\leqq 30\ [k\Omega]$$

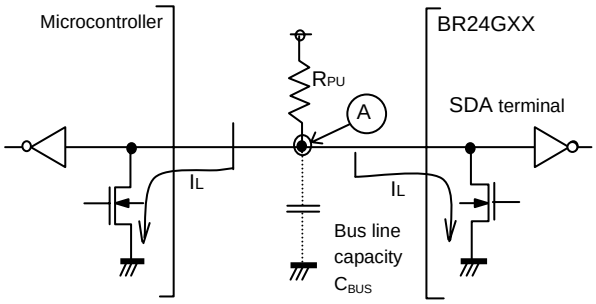

Figure 44. I/O Circuit Diagram

3. Minimum Value of R_{PU}

The minimum value of R_{PU} is determined by the following factors.

(1) When IC outputs LOW, it should be satisfied that V_{OLMAX}=0.4V and I_{OLMAX}=3mA.

$$\frac{V_{CC}-V_{OL}}{R_{PU}} \leqq I_{OL}$$

$$\therefore\ R_{PU} \geqq \frac{V_{CC}-V_{OL}}{I_{OL}}$$

(2) V_{OLMAX}=0.4V should secure the input 'L' level (V_{IL}) of microcontroller and EEPROM including recommended noise margin 0.1V_{cc}.

$$V_{OLMAX} \leqq V_{IL}-0.1\,V_{CC}$$

Ex.) V_{CC} =3V, V_{OL}=0.4V, I_{OL}=3mA, microcontroller, EEPROM V_{IL}=0.3Vcc

from (1)

$$R_{PU} \geqq \frac{3-0.4}{3\times 10^{-3}}$$

$$\geqq 867[\Omega]$$

And V_{OL}=0.4 [V]

V_{IL}=0.3×3

=0.9 [V]

Therefore, the condition (2) is satisfied.

4. Pull-up Resistance of SCL Terminal

When SCL control is made at the CMOS output port, there is no need for a pull up resistor. But when there is a time where SCL becomes 'Hi-Z', add a pull up resistor. As for the pull up resistor value, one of several kΩ to several ten kΩ is recommended in consideration of drive performance of output port of microcontroller.

©2013 ROHM Co., Ltd. All rights reserved.

Cautions on Microcontroller Connection

1. R_s

In I^2C BUS, it is recommended that SDA port is of open drain input/output. However, when using CMOS input / output of tri state to SDA port, insert a series resistance R_S between the pull up resistor R_{PU} and the SDA terminal of EEPROM. This is to control over current that may occur when PMOS of the microcontroller and NMOS of EEPROM are turned ON simultaneously. R_S also plays the role of protecting the SDA terminal against surge. Therefore, even when SDA port is open drain input/output, R_S can be used.

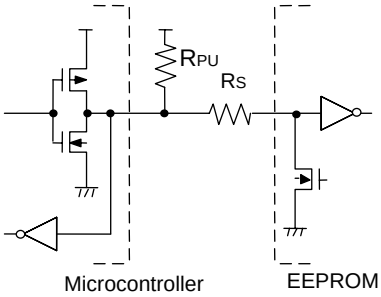

Figure 45. I/O Circuit Diagram

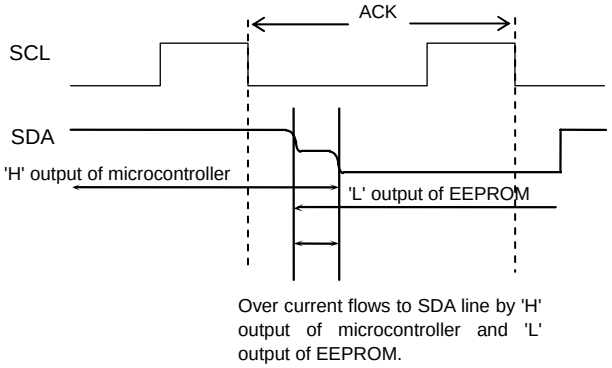

Figure 46. Input / Output Collision Timing

2. Maximum Value of R_s

The maximum value of R_S is determined by the following relations:

(1)SDA rise time to be determined by the capacitance (C_{BUS}) of bus line and R_{PU} of SDA should be t_R or lower. Furthermore, AC timing should be satisfied even when SDA rise time is slow.

(2)The bus' electric potential Ⓐ to be determined by R_{PU} and R_S the moment when EEPROM outputs 'L' to SDA bus should sufficiently secure the input 'L' level (V_{IL}) of microcontroller including recommended noise margin of 0.1Vcc.

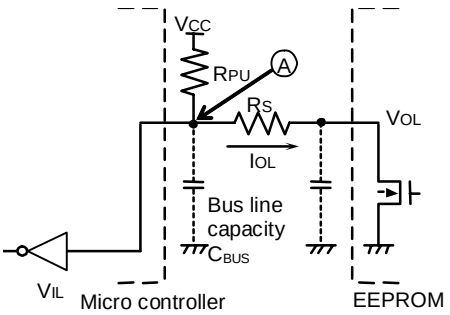

Figure 47. I/O Circuit Diagram

$$\frac{(V_{CC}-V_{OL})\times R_S}{R_{PU}+R_S}+V_{OL}+0.1V_{CC}\leqq V_{IL}$$

$$\therefore\ R_S\leqq\frac{V_{IL}-V_{OL}-0.1V_{CC}}{1.1V_{CC}-V_{IL}}\times R_{PU}$$

Ex)V_{CC}=3V V_{IL}=0.3V_{CC} V_{OL}=0.4V R_{PU}=20 kΩ

$$R_S\leqq\frac{0.3\times3-0.4-0.1\times3}{1.1\times3-0.3\times3}\times20\times10^3$$

$$\leqq1.67\ [k\Omega]$$

3. Minimum Value of R_s

The minimum value of R_s is determined by over current at bus collision. When over current flows, noises in power source line and instantaneous power failure of power source may occur. When allowable over current is defined as I, the following relation must be satisfied. Determine the allowable current in consideration of the impedance of power source line in set and so forth. Set the over current to EEPROM at 10mA or lower.

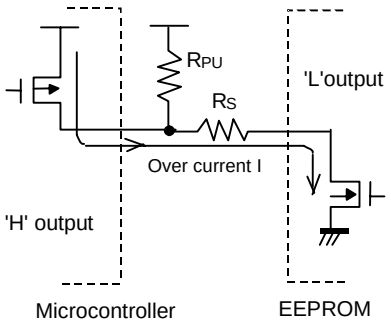

Figure 48. I/O Circuit Diagram

$$\frac{V_{CC}}{R_S}\leqq I$$

$$\therefore\ R_S\geqq\frac{V_{CC}}{I}$$

EX) V_{CC}=3V I=10mA

$$R_S\geqq\frac{3}{10\times10^{-3}}$$

$$\geqq300[\Omega]$$

©2013 ROHM Co., Ltd. All rights reserved.

I/O Equivalence Circuit

1. Input (A1, A2, SCL, WP)

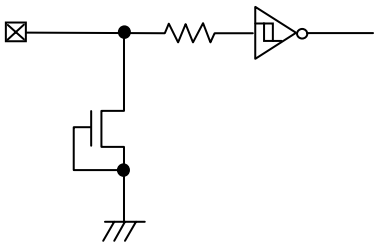

Figure 49. Input Pin Circuit Diagram

2. Input / Output (SDA)

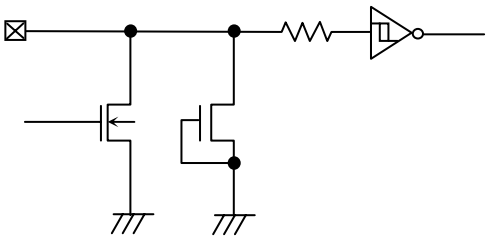

Figure 50. Input / Output Pin Circuit Diagram

©2013 ROHM Co., Ltd. All rights reserved.

Power-Up/Down Conditions

At power on, the IC's internal circuits may go through unstable low voltage area as the Vcc rises, making the IC's internal logic circuit not completely reset, hence, malfunction may occur. To prevent this, the IC is equipped with POR circuit and LVCC circuit. To assure the operation, observe the following conditions at power on.

1. Set SDA = 'H' and SCL ='L' or 'H'
2. Start power source so as to satisfy the recommended conditions of t_R, t_{OFF}, and V_{bot} for operating POR circuit.

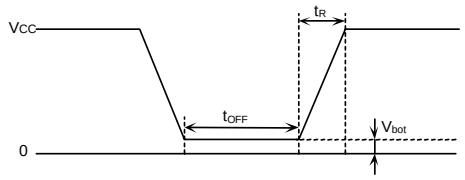

Figure 51. Rise Waveform Diagram

Recommended conditions of t_R, t_{OFF},V_{bot}

t_R	t_{OFF}	V_{bot}
10ms or below	10ms or larger	0.3V or below
100ms or below	10ms or larger	0.2V or below

3. Set SDA and SCL so as not to become 'Hi-Z'.
   When the above conditions 1 and 2 cannot be observed, take the following countermeasures.

(1) In the case when the above condition 1 cannot be observed such that SDA becomes 'L' at power on.
→Control SCL and SDA as shown below, to make SCL and SDA, 'H' and 'H'.

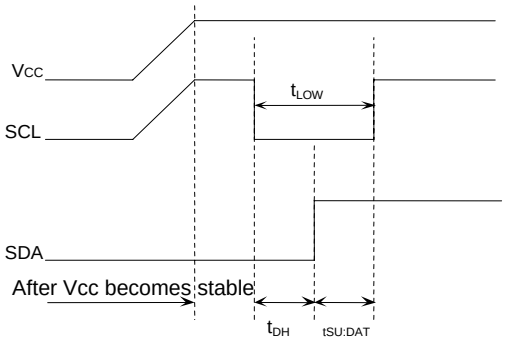

Figure 52. When SCL= 'H' and SDA= 'L'

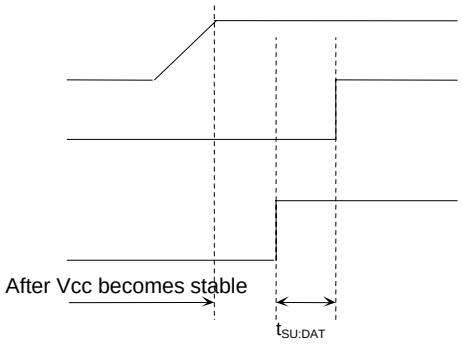

Figure 53. When SCL='L' and SDA='L'

(2) In the case when the above condition 2 cannot be observed.
→After power source becomes stable, execute software reset(Page 16).
(3) In the case when the above conditions 1 and 2 cannot be observed.
→Carry out (1), and then carry out (2).

Low Voltage Malfunction Prevention Function

LVCC circuit prevents data rewrite operation at low power and prevents write error. At LVCC voltage (Typ =1.2V) or below, data rewrite is prevented.

Noise Countermeasures

1. Bypass Capacitor

When noise or surge gets in the power source line, malfunction may occur, therefore, it is recommended to connect a bypass capacitor (0.1µF) between the IC's V_{CC} and GND pins. Connect the capacitor as close to the IC as possible. In addition, it is also recommended to connect a bypass capacitor between the board's V_{CC} and GND.

©2013 ROHM Co., Ltd. All rights reserved.

Operational Notes

1. Described numeric values and data are design representative values only, and the values are not guaranteed.

2. We believe that the application circuit examples in this document are recommendable. However, in actual use, confirm characteristics further sufficiently. If changing the fixed number of external parts is desired, make your decision with sufficient margin in consideration of static characteristics, transient characteristics, and fluctuations of external parts and our LSI.

3. Absolute maximum ratings
   If the absolute maximum ratings such as supply voltage, operating temperature range, and so on are exceeded, LSI may be destroyed. Do not supply voltage or subject the IC to temperatures exceeding the absolute maximum ratings. In the case of fear of exceeding the absolute maximum ratings, take physical safety countermeasures such as adding fuses, and see to it that conditions exceeding the absolute maximum ratings should not be supplied to the LSI.

4. GND electric potential
   Set the voltage of GND terminal lowest at any operating condition. Make sure that each terminal voltage is not lower than that of GND terminal.

5. Thermal design
   Use a thermal design that allows for a sufficient margin by taking into account the permissible power dissipation (Pd) in actual operating conditions.

6. Short between pins and mounting errors
   Be careful when mounting the IC on printed circuit boards. The IC may be damaged if it is mounted in a wrong orientation or if pins are shorted together. Short circuit may be caused by conductive particles caught between the pins.

7. Operating the IC in the presence of strong electromagnetic field may cause malfunction, therefore, evaluate design sufficiently.

©2013 ROHM Co., Ltd. All rights reserved.

Part Numbering

B R 2 4 G 0 4 x x x - 3 x x

BUS Type
24 : I^2C

Operating Temperature / Power Source Voltage
-40℃ to+85℃/
1.6V to 5.5V

Capacity
04=4K

Package

Blank	:DIP-T8
F	:SOP8
FJ	:SOP-J8
FV	: SSOP-B8
FVT	: TSSOP-B8
FVJ	: TSSOP-B8J
FVM	: MSOP8
NUX	: VSON008X2030

Process Code

Packaging and Forming Specification

E2	: EMBOSSED tape and reel (SOP8,SOP-J8, SSOP-B8,TSSOP-B8, TSSOP-B8J)
TR	: Embossed tape and reel (MSOP8, VSON008X2030)
None	: Tube (DIP-T8)

©2013 ROHM Co., Ltd. All rights reserved.

Physical Dimensions Tape and Reel Information

DIP-T8

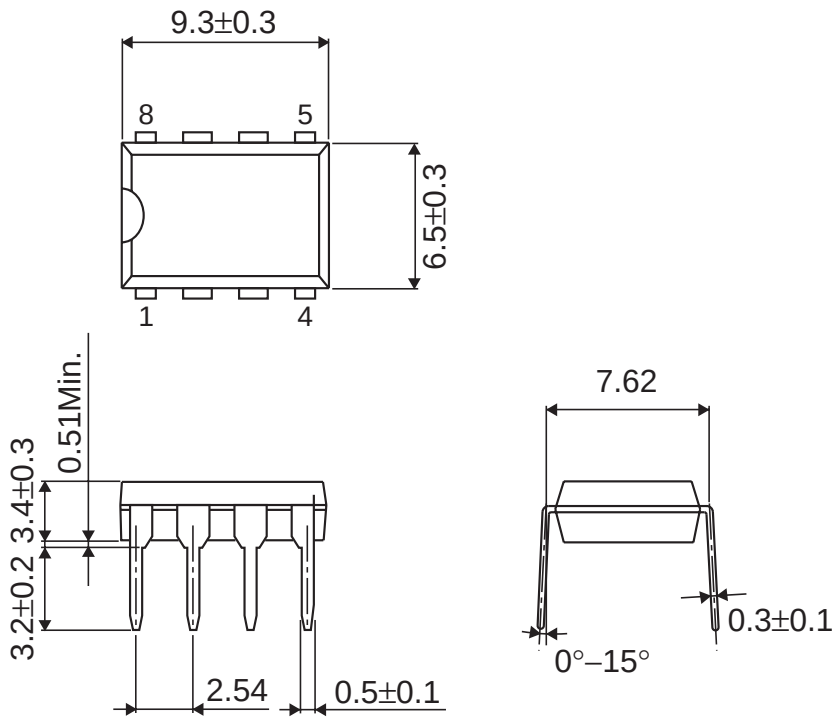

(Unit : mm)

<Tape and Reel information>

Container	Tube
Quantity	2000pcs
Direction of feed	Direction of products is fixed in a container tube

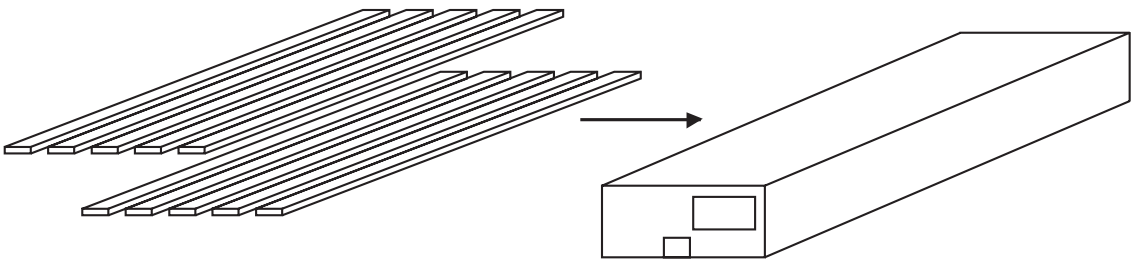

∗Order quantity needs to be multiple of the minimum quantity.

©2013 ROHM Co., Ltd. All rights reserved.

SOP8

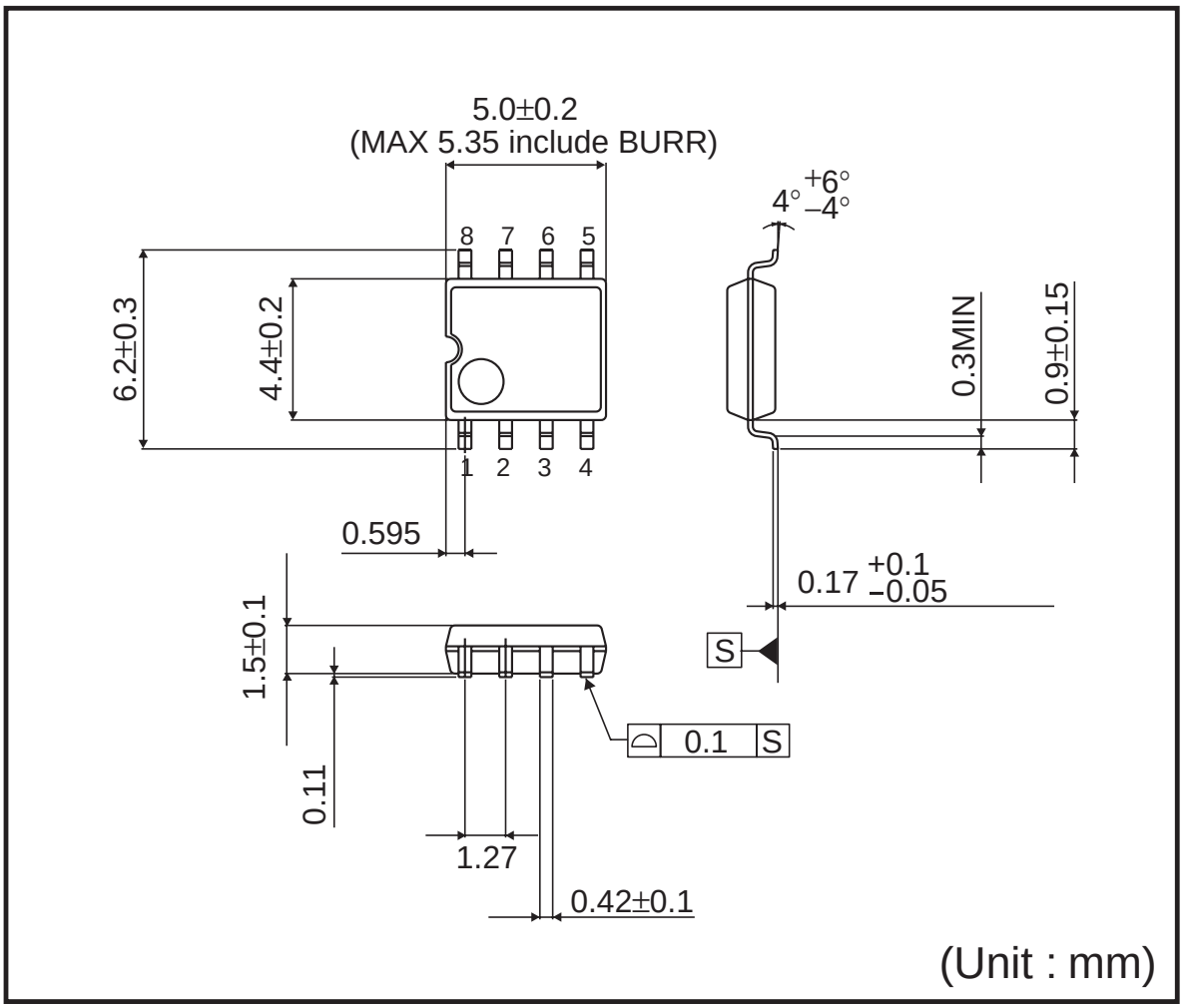

<Tape and Reel information>

Tape	Embossed carrier tape
Quantity	2500pcs
Direction of feed	E2 (The direction is the 1pin of product is at the upper left when you hold reel on the left hand and you pull out the tape on the right hand)

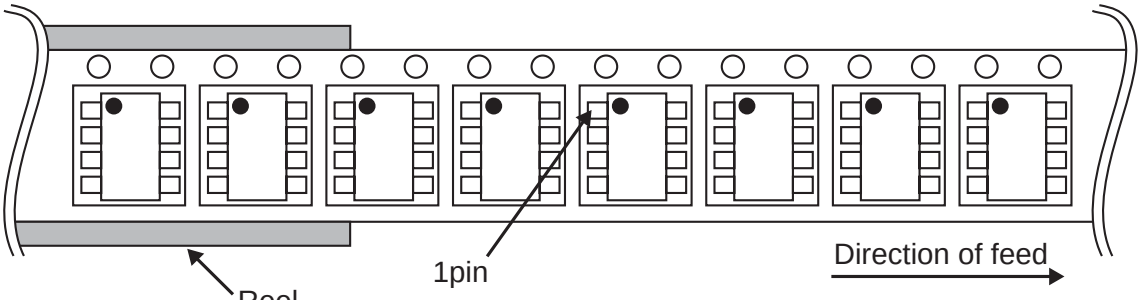

∗Order quantity needs to be multiple of the minimum quantity.

©2013 ROHM Co., Ltd. All rights reserved.

SOP-J8

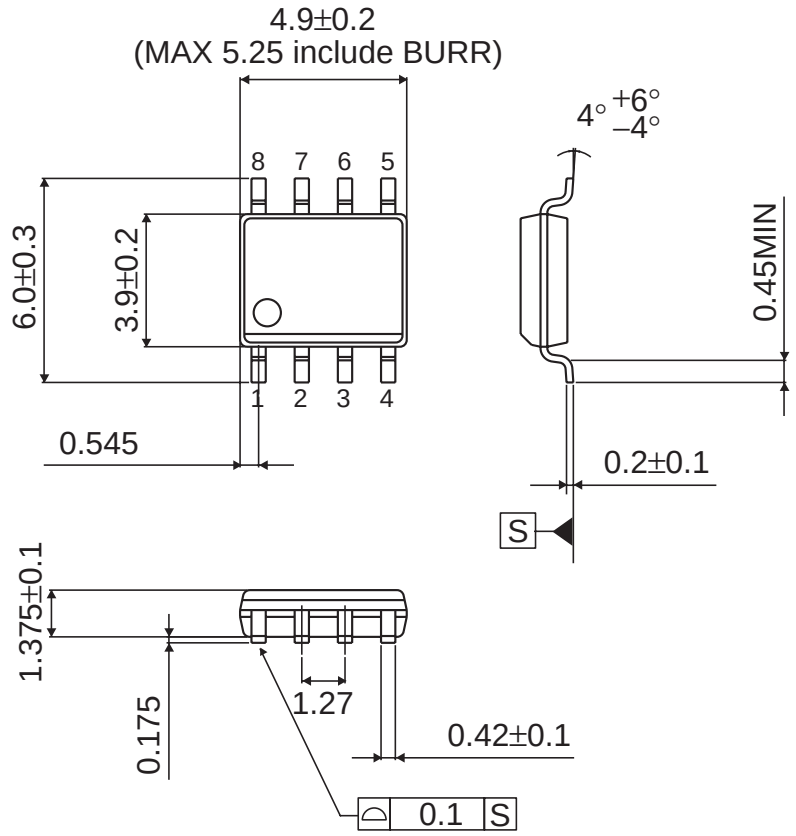

(Unit : mm)

<Tape and Reel information>

Tape	Embossed carrier tape
Quantity	2500pcs
Direction of feed	E2 (The direction is the 1pin of product is at the upper left when you hold reel on the left hand and you pull out the tape on the right hand)

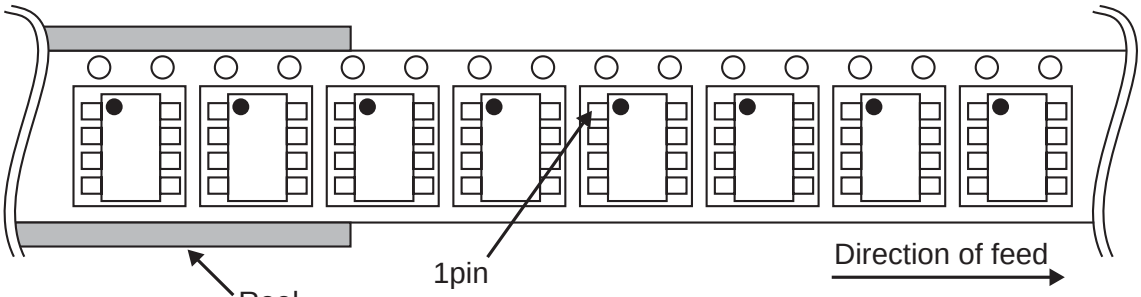

∗Order quantity needs to be multiple of the minimum quantity.

©2013 ROHM Co., Ltd. All rights reserved.

SSOP-B8

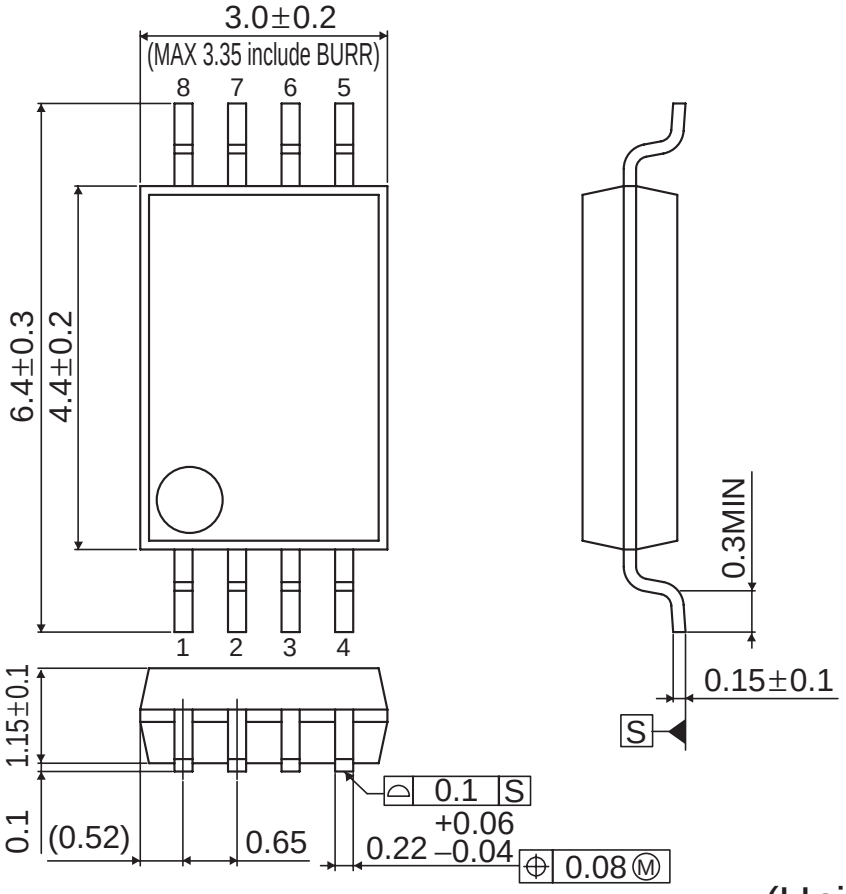

(Unit : mm)

<Tape and Reel information>

Tape	Embossed carrier tape
Quantity	2500pcs
Direction of feed	E2 (The direction is the 1pin of product is at the upper left when you hold reel on the left hand and you pull out the tape on the right hand)

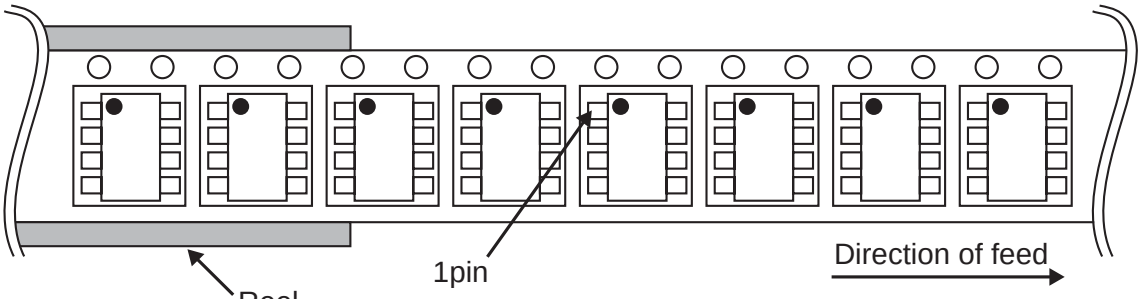

∗Order quantity needs to be multiple of the minimum quantity.

©2013 ROHM Co., Ltd. All rights reserved.

TSSOP-B8

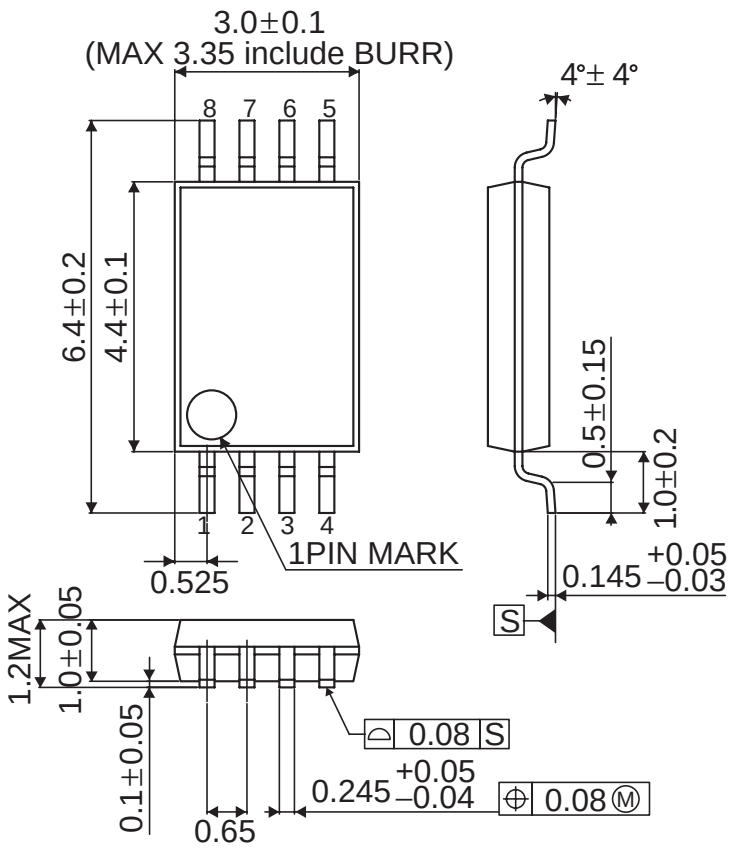

(Unit : mm)

<Tape and Reel information>

Tape	Embossed carrier tape
Quantity	3000pcs
Direction of feed	E2 (The direction is the 1pin of product is at the upper left when you hold reel on the left hand and you pull out the tape on the right hand)

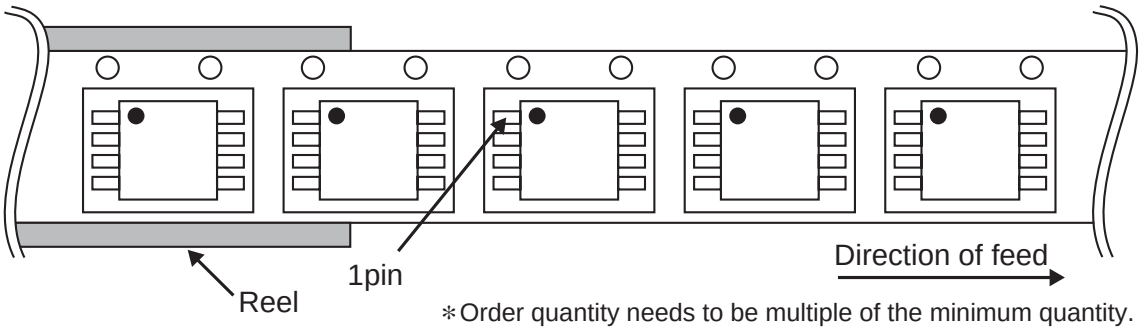

∗Order quantity needs to be multiple of the minimum quantity.

©2013 ROHM Co., Ltd. All rights reserved.

TSSOP-B8J

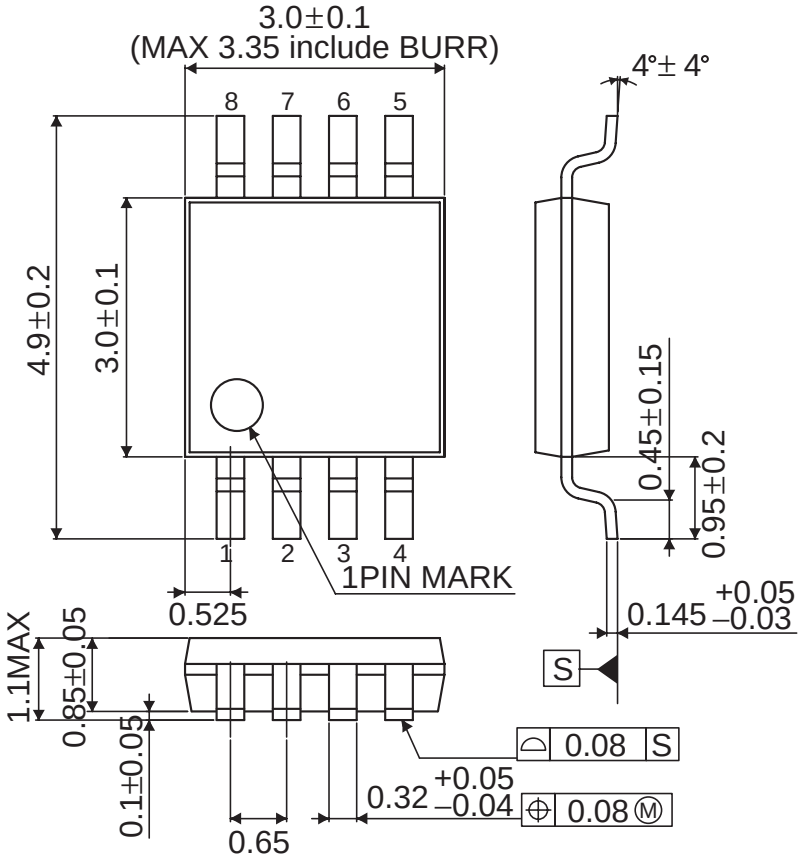

(Unit : mm)

<Tape and Reel information>

Tape	Embossed carrier tape
Quantity	2500pcs
Direction of feed	E2 (The direction is the 1pin of product is at the upper left when you hold reel on the left hand and you pull out the tape on the right hand)

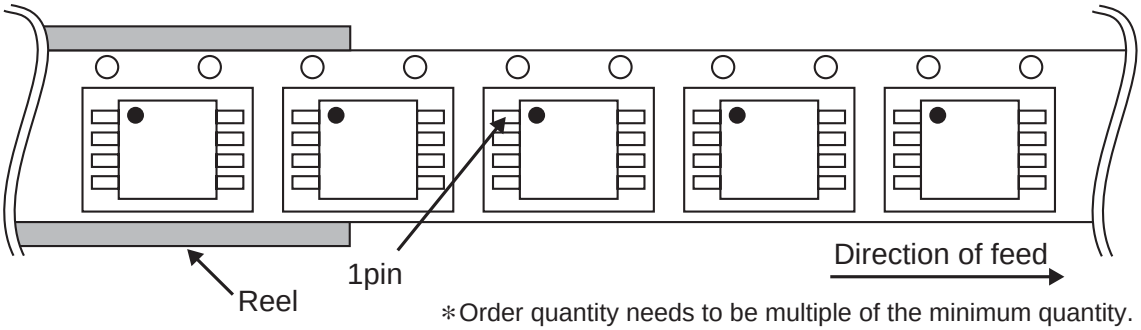

∗Order quantity needs to be multiple of the minimum quantity.

©2013 ROHM Co., Ltd. All rights reserved.

MSOP8

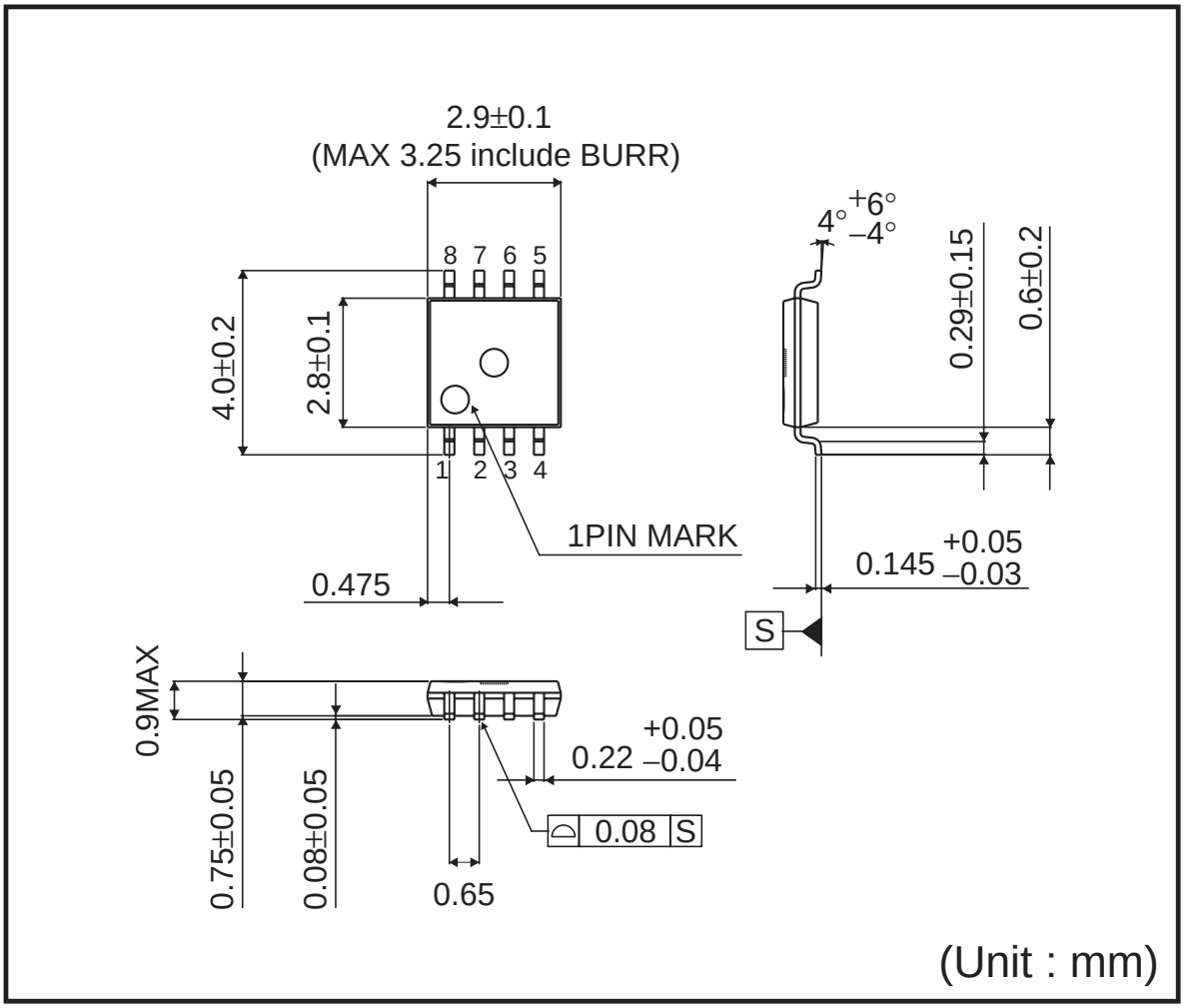

<Tape and Reel information>

Tape	Embossed carrier tape
Quantity	3000pcs
Direction of feed	TR (The direction is the 1pin of product is at the upper right when you hold reel on the left hand and you pull out the tape on the right hand)

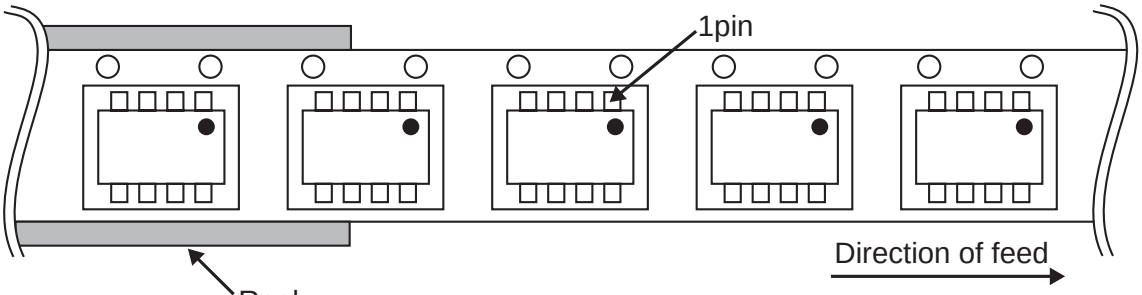

∗Order quantity needs to be multiple of the minimum quantity.

©2013 ROHM Co., Ltd. All rights reserved.

VSON008X2030

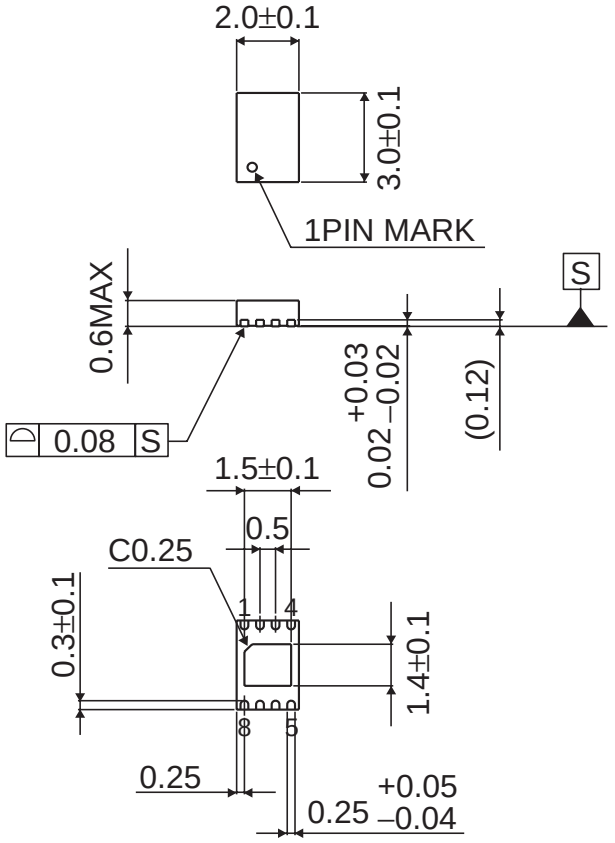

(Unit : mm)

<Tape and Reel information>

Tape	Embossed carrier tape
Quantity	4000pcs
Direction of feed	TR (The direction is the 1pin of product is at the upper right when you hold reel on the left hand and you pull out the tape on the right hand)

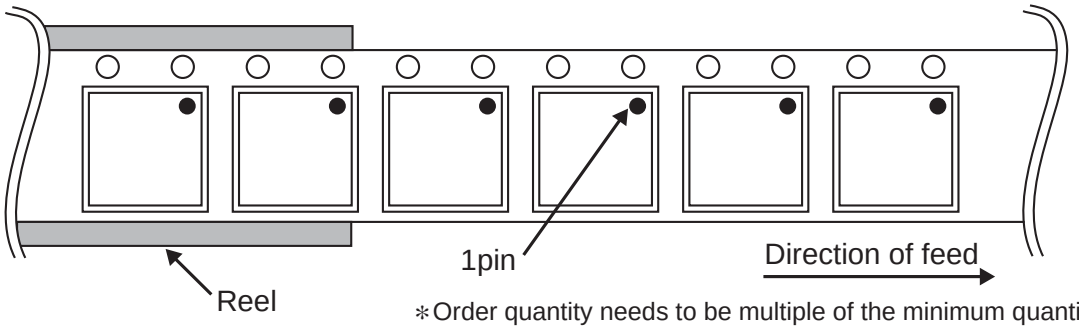

∗Order quantity needs to be multiple of the minimum quantity.

©2013 ROHM Co., Ltd. All rights reserved.

Marking Diagrams (TOP VIEW)

DIP-T8 (TOP VIEW)

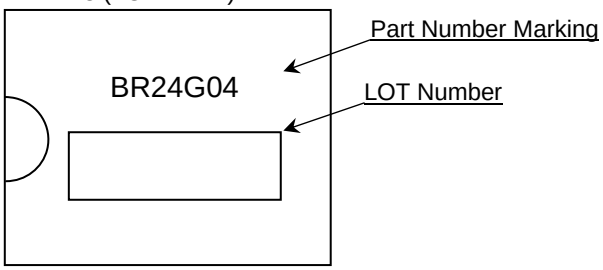

SOP8 (TOP VIEW)

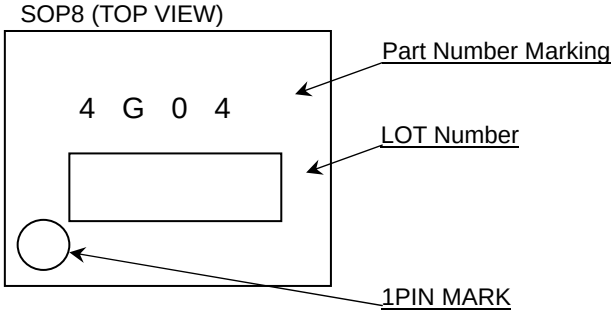

SOP-J8 (TOP VIEW)

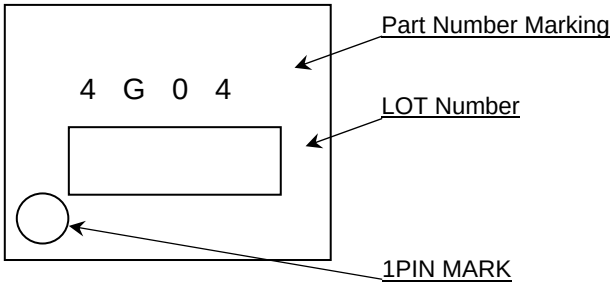

SSOP-B8 (TOP VIEW)

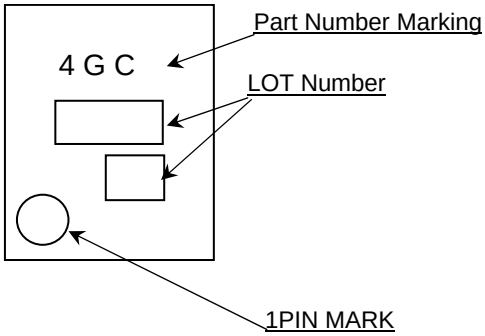

TSSOP-B8 (TOP VIEW)

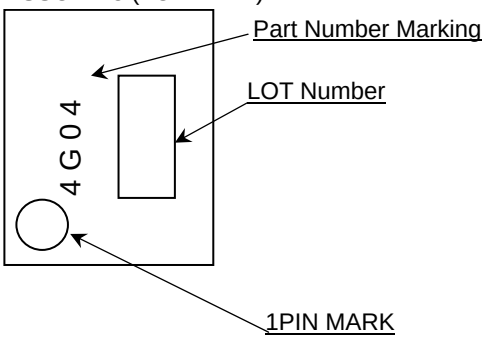

TSSOP-B8J (TOP VIEW)

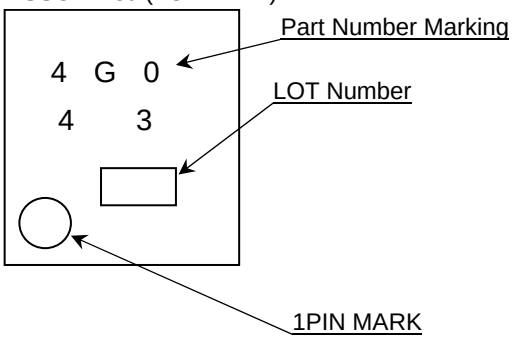

MSOP8 (TOP VIEW)

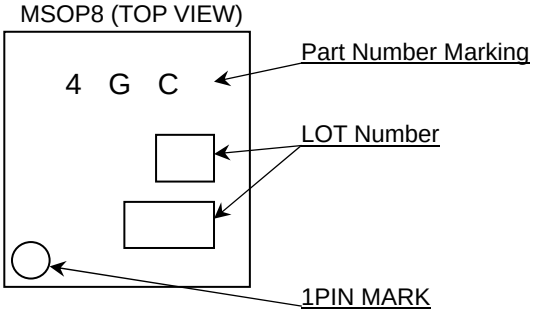

VSON008X2030 (TOP VIEW)

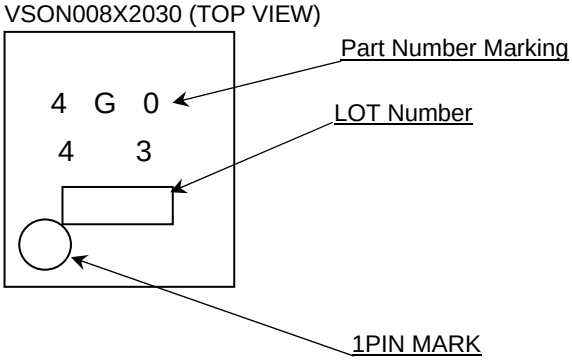

©2013 ROHM Co., Ltd. All rights reserved.

Revision History

Date	Revision	Changes
15.Jun.2012	001	New Release
25.Feb.2013	002	Update some English words, sentences' descriptions, grammar and formatting. Add tF2 in AC Characteristic and Serial Input / Output Timing
31.May.2013	003	P1 Change format of package line-up table. P.2 Add VESD in Absolute Maximum Ratings P.4 Add directions in Pin Descriptions

©2013 ROHM Co., Ltd. All rights reserved.

Notice

Precaution on using ROHM Products

1. Our Products are designed and manufactured for application in ordinary electronic equipments (such as AV equipment, OA equipment, telecommunication equipment, home electronic appliances, amusement equipment, etc.). If you intend to use our Products in devices requiring extremely high reliability (such as medical equipment (Note 1), transport equipment, traffic equipment, aircraft/spacecraft, nuclear power controllers, fuel controllers, car equipment including car accessories, safety devices, etc.) and whose malfunction or failure may cause loss of human life, bodily injury or serious damage to property ("Specific Applications"), please consult with the ROHM sales representative in advance. Unless otherwise agreed in writing by ROHM in advance, ROHM shall not be in any way responsible or liable for any damages, expenses or losses incurred by you or third parties arising from the use of any ROHM's Products for Specific Applications.

(Note1) Medical Equipment Classification of the Specific Applications

JAPAN	USA	EU	CHINA
CLASSⅢ	CLASSⅢ	CLASSⅡb	CLASSⅢ
CLASSⅣ		CLASSⅢ	

2. ROHM designs and manufactures its Products subject to strict quality control system. However, semiconductor products can fail or malfunction at a certain rate. Please be sure to implement, at your own responsibilities, adequate safety measures including but not limited to fail-safe design against the physical injury, damage to any property, which a failure or malfunction of our Products may cause. The following are examples of safety measures:
   [a] Installation of protection circuits or other protective devices to improve system safety
   [b] Installation of redundant circuits to reduce the impact of single or multiple circuit failure

3. Our Products are designed and manufactured for use under standard conditions and not under any special or extraordinary environments or conditions, as exemplified below. Accordingly, ROHM shall not be in any way responsible or liable for any damages, expenses or losses arising from the use of any ROHM's Products under any special or extraordinary environments or conditions. If you intend to use our Products under any special or extraordinary environments or conditions (as exemplified below), your independent verification and confirmation of product performance, reliability, etc, prior to use, must be necessary:
   [a] Use of our Products in any types of liquid, including water, oils, chemicals, and organic solvents
   [b] Use of our Products outdoors or in places where the Products are exposed to direct sunlight or dust
   [c] Use of our Products in places where the Products are exposed to sea wind or corrosive gases, including Cl_2, H_2S, NH_3, SO_2, and NO_2
   [d] Use of our Products in places where the Products are exposed to static electricity or electromagnetic waves
   [e] Use of our Products in proximity to heat-producing components, plastic cords, or other flammable items
   [f] Sealing or coating our Products with resin or other coating materials
   [g] Use of our Products without cleaning residue of flux (even if you use no-clean type fluxes, cleaning residue of flux is recommended); or Washing our Products by using water or water-soluble cleaning agents for cleaning residue after soldering
   [h] Use of the Products in places subject to dew condensation

4. The Products are not subject to radiation-proof design.

5. Please verify and confirm characteristics of the final or mounted products in using the Products.

6. In particular, if a transient load (a large amount of load applied in a short period of time, such as pulse. is applied, confirmation of performance characteristics after on-board mounting is strongly recommended. Avoid applying power exceeding normal rated power; exceeding the power rating under steady-state loading condition may negatively affect product performance and reliability.

7. De-rate Power Dissipation (Pd) depending on Ambient temperature (Ta). When used in sealed area, confirm the actual ambient temperature.

8. Confirm that operation temperature is within the specified range described in the product specification.

9. ROHM shall not be in any way responsible or liable for failure induced under deviant condition from what is defined in this document.

Precaution for Mounting / Circuit board design

1. When a highly active halogenous (chlorine, bromine, etc.) flux is used, the residue of flux may negatively affect product performance and reliability.

2. In principle, the reflow soldering method must be used; if flow soldering method is preferred, please consult with the ROHM representative in advance.

For details, please refer to ROHM Mounting specification

© 2014 ROHM Co., Ltd. All rights reserved.

Precautions Regarding Application Examples and External Circuits

1. If change is made to the constant of an external circuit, please allow a sufficient margin considering variations of the characteristics of the Products and external components, including transient characteristics, as well as static characteristics.

2. You agree that application notes, reference designs, and associated data and information contained in this document are presented only as guidance for Products use. Therefore, in case you use such information, you are solely responsible for it and you must exercise your own independent verification and judgment in the use of such information contained in this document. ROHM shall not be in any way responsible or liable for any damages, expenses or losses incurred by you or third parties arising from the use of such information.

Precaution for Electrostatic

This Product is electrostatic sensitive product, which may be damaged due to electrostatic discharge. Please take proper caution in your manufacturing process and storage so that voltage exceeding the Products maximum rating will not be applied to Products. Please take special care under dry condition (e.g. Grounding of human body / equipment / solder iron, isolation from charged objects, setting of Ionizer, friction prevention and temperature / humidity control).

Precaution for Storage / Transportation

1. Product performance and soldered connections may deteriorate if the Products are stored in the places where:
   [a] the Products are exposed to sea winds or corrosive gases, including Cl2, H2S, NH3, SO2, and NO2
   [b] the temperature or humidity exceeds those recommended by ROHM
   [c] the Products are exposed to direct sunshine or condensation
   [d] the Products are exposed to high Electrostatic

2. Even under ROHM recommended storage condition, solderability of products out of recommended storage time period may be degraded. It is strongly recommended to confirm solderability before using Products of which storage time is exceeding the recommended storage time period.

3. Store / transport cartons in the correct direction, which is indicated on a carton with a symbol. Otherwise bent leads may occur due to excessive stress applied when dropping of a carton.

4. Use Products within the specified time after opening a humidity barrier bag. Baking is required before using Products of which storage time is exceeding the recommended storage time period.

Precaution for Product Label

QR code printed on ROHM Products label is for ROHM's internal use only.

Precaution for Disposition

When disposing Products please dispose them properly using an authorized industry waste company.

Precaution for Foreign Exchange and Foreign Trade act

Since our Products might fall under controlled goods prescribed by the applicable foreign exchange and foreign trade act, please consult with ROHM representative in case of export.

Precaution Regarding Intellectual Property Rights

1. All information and data including but not limited to application example contained in this document is for reference only. ROHM does not warrant that foregoing information or data will not infringe any intellectual property rights or any other rights of any third party regarding such information or data. ROHM shall not be in any way responsible or liable for infringement of any intellectual property rights or other damages arising from use of such information or data.:

2. No license, expressly or implied, is granted hereby under any intellectual property rights or other rights of ROHM or any third parties with respect to the information contained in this document.

Other Precaution

1. This document may not be reprinted or reproduced, in whole or in part, without prior written consent of ROHM.

2. The Products may not be disassembled, converted, modified, reproduced or otherwise changed without prior written consent of ROHM.

3. In no event shall you use in any way whatsoever the Products and the related technical information contained in the Products or this document for any military purposes, including but not limited to, the development of mass-destruction weapons.

4. The proper names of companies or products described in this document are trademarks or registered trademarks of ROHM, its affiliated companies or third parties.

© 2014 ROHM Co., Ltd. All rights reserved.

General Precaution

1. Before you use our Products, you are requested to carefully read this document and fully understand its contents. ROHM shall not be in any way responsible or liable for failure, malfunction or accident arising from the use of any ROHM's Products against warning, caution or note contained in this document.

2. All information contained in this document is current as of the issuing date and subject to change without any prior notice. Before purchasing or using ROHM's Products, please confirm the latest information with a ROHM sales representative.

3. The information contained in this document is provided on an "as is" basis and ROHM does not warrant that all information contained in this document is accurate and/or error-free. ROHM shall not be in any way responsible or liable for any damages, expenses or losses incurred by you or third parties resulting from inaccuracy or errors of or concerning such information.

© 2014 ROHM Co., Ltd. All rights reserved.

Компания «ЭлектроПласт» предлагает заключение долгосрочных отношений при поставках импортных электронных компонентов на взаимовыгодных условиях!

Наши преимущества:

- Оперативные поставки широкого спектра электронных компонентов отечественного и импортного производства напрямую от производителей и с крупнейших мировых складов;
- Поставка более 17-ти миллионов наименований электронных компонентов;
- Поставка сложных, дефицитных, либо снятых с производства позиций;
- Оперативные сроки поставки под заказ (от 5 рабочих дней);
- Экспресс доставка в любую точку России;
- Техническая поддержка проекта, помощь в подборе аналогов, поставка прототипов;
- Система менеджмента качества сертифицирована по Международному стандарту ISO 9001;
- Лицензия ФСБ на осуществление работ с использованием сведений, составляющих государственную тайну;
- Поставка специализированных компонентов (Xilinx, Altera, Analog Devices, Intersil, Interpoint, Microsemi, Aeroflex, Peregrine, Syfer, Eurofarad, Texas Instrument, Miteq, Cobham, E2V, MA-COM, Hittite, Mini-Circuits,General Dynamics и др.);

Помимо этого, одним из направлений компании «ЭлектроПласт» является направление «Источники питания». Мы предлагаем Вам помощь Конструкторского отдела:

- Подбор оптимального решения, техническое обоснование при выборе компонента;
- Подбор аналогов;
- Консультации по применению компонента;
- Поставка образцов и прототипов;
- Техническая поддержка проекта;
- Защита от снятия компонента с производства.

Как с нами связаться

Телефон: 8 (812) 309 58 32 (многоканальный)
Факс: 8 (812) 320-02-42
Электронная почта: org@eplast1.ru
Адрес: 198099, г. Санкт-Петербург, ул. Калинина, дом 2, корпус 4, литера А.