Secondary-Side Controller with Current Share and Housekeeping

ADM1041A

FEATURES

Digital calibration via internal EEPROM
Supports SSI specification
Comprehensive fault detection
Reduced component count on secondary side
Standalone or microcontroller control

SECONDARY-SIDE FEATURES

Generates error signal for primary-side PWM
Output voltage adjustment and margining
Current sharing
Current-limit adjustment
OrFET control
Programmable soft-start slew rate
Standalone or microcontroller operation
Differential load voltage sense
AC mains undervoltage detection (ac sense)
Overvoltage protection

INTERFACE AND INTERNAL FEATURES

SMBus interface (I^2C-compatible)
Voltage-error amplifier
Differential current sense
Sense resistor or current transformer option
Overvoltage protection
Undervoltage protection
Overcurrent protection
Overtemperature protection
Start-up undervoltage blanking
Programmable digital debounce and delays
352-byte EEPROM available for field data
160-byte EEPROM for calibration
Ground continuity monitoring

APPLICATIONS

Network servers
Web servers
Power supply control

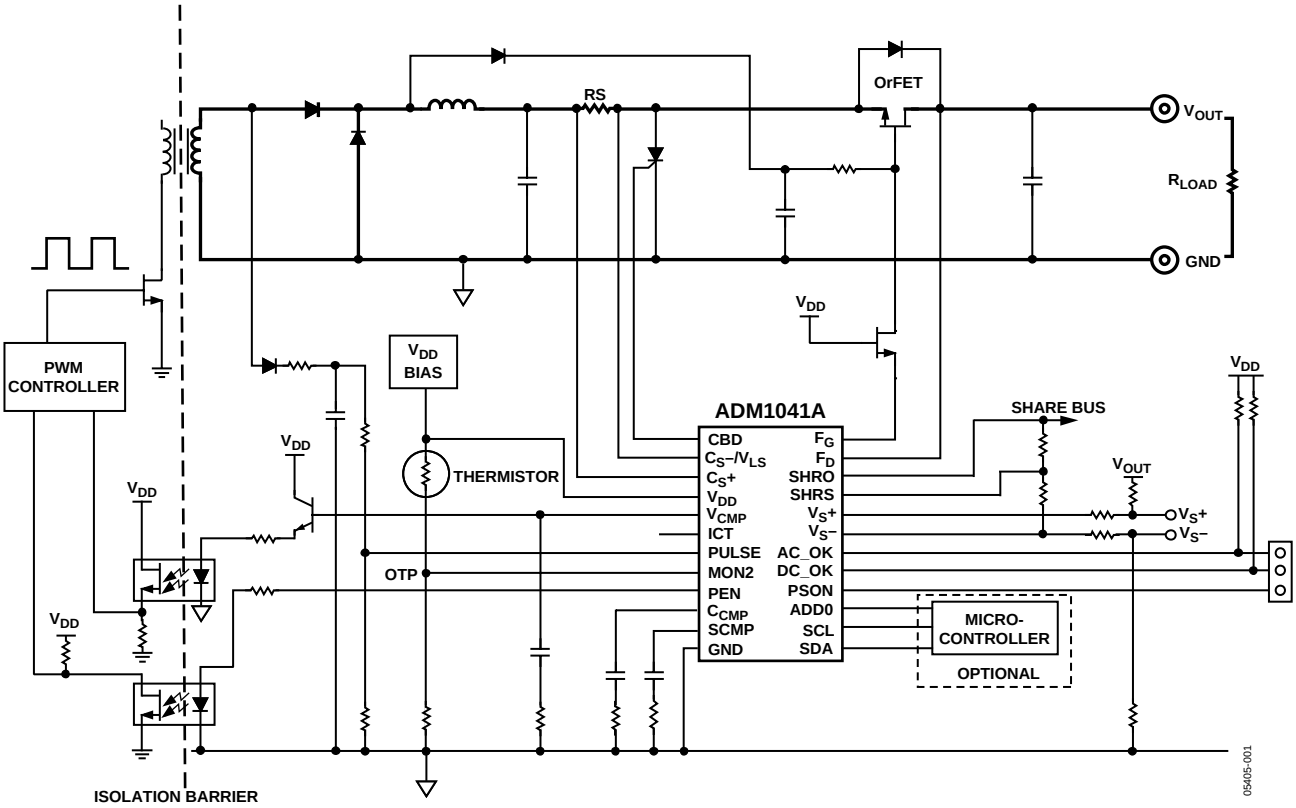

Figure 1. Typical Application Circuit

Rev. 0

Information furnished by Analog Devices is believed to be accurate and reliable. However, no responsibility is assumed by Analog Devices for its use, nor for any infringements of patents or other rights of third parties that may result from its use. Specifications subject to change without notice. No license is granted by implication or otherwise under any patent or patent rights of Analog Devices. Trademarks and registered trademarks are the property of their respective owners.

One Technology Way, P.O. Box 9106, Norwood, MA 02062-9106, U.S.A.
Tel: 781.329.4700 **www.analog.com**
Fax: 781.326.8703 **© 2005 Analog Devices, Inc. All rights reserved.**

TABLE OF CONTENTS

General Description ... 3
Sample Application Circuit Description ... 3
Specifications ... 6
Absolute Maximum Ratings ... 13
Thermal Characteristics ... 13
ESD Caution ... 13
Pin Configuration and Function Descriptions ... 14
Terminology ... 16
Theory of Operation ... 18
Power Management ... 18
Gain Trimming and Configuration ... 18
Differential Remote Sense Amplifier ... 19
Set Load Voltage ... 19
Load Overvoltage (OV) ... 19
Local Voltage Sense ... 19
Local Overvoltage Protection (OVP) ... 19
Local Undervoltage Protection (UVP) ... 19
False UV Clamp ... 19
Voltage Error Amplifier ... 20
Main Voltage Reference ... 20
Current-Sense Amplifier ... 20
Current Sensing ... 21
Current-Transformer Input ... 21
Current-Sense Calibration ... 21
Current-Limit Error Amplifier ... 21
Overcurrent Protection ... 22
Current Share ... 22
Current-Share Offset ... 22
I_{SHARE} Drive Amplifier ... 22
Differential Sense Amplifier ... 22
I_{SHARE} Error Amplifier ... 22
I_{SHARE} Clamp ... 22
SHARE_OK Detector ... 23
Pulse/AC_{SENSE}2 ... 24
Pulse ... 24
AC_{SENSE} ... 24
OrFET Gate Drive ... 25
Oscillator and Timing Generators ... 27
Logic I/O and Monitor Pins ... 27
SMBus Serial Port ... 30
Microprocessor Support ... 30
Broadcasting ... 30
SMBus Serial Interface ... 30
General SMBus Timing ... 31
SMBus Protocols for RAM and EEPROM ... 33
SMBus Read Operations ... 35
SMBus Alert Response Address (ARA) ... 36
Support for SMBus 1.1 ... 36
Layout Considerations ... 36
Power-Up Auto-Configuration ... 36
Extended SMBus Addressing ... 37
Backdoor Access ... 37
Register Listing ... 38
Detailed Register Descriptions ... 39
Manufacturing Data ... 48
Microprocessor Support ... 49
Test Name Table ... 51
Outline Dimensions ... 53
Ordering Guide ... 53

REVISION HISTORY

7/05—Revision 0: Initial Version

GENERAL DESCRIPTION

The ADM1041A is a secondary-side and management IC specifically designed to minimize external component counts and to eliminate the need for manual calibration or adjustment on the secondary-side controller. The principle application of this IC is to provide voltage control, current share, and housekeeping functions for single output in N+1 server power supplies.

The ADM1041A is manufactured with a 5 V CMOS process and combines digital and analog circuitry. An internal EEPROM provides added flexibility for trimming timing and voltage and selecting various functions. Programming is done via an SMBus serial port that also allows communication capability with a microprocessor or microcontroller.

The usual configuration using this IC is on a one-per-output voltage rail. Output from the IC can be wire-OR'ed together or bused in parallel and read by a microprocessor. A key feature on this IC is support for an OrFET circuit when higher efficiency or power density is required.

SAMPLE APPLICATION CIRCUIT DESCRIPTION

Figure 1 shows a sample application circuit using the ADM1041A. The primary side is not detailed and the focus is on the secondary side of the power supply.

The ADM1041A controls the output voltage from the power supply to the designed programmed value. This programmed value is determined during power supply design and is digitally adjusted via the serial interface. Digital adjustment of the current sense and current limit is also calibrated via the serial interface, as are all of the internal timing specifications.

The control loop consists of a number of elements, notably the inputs to the loop and the output of the loop. The ADM1041A takes the loop inputs and determines what, if any, adjustments are needed to maintain a stable output. To maintain a stable loop, the ADM1041A uses three main inputs:

- Remote voltage sense
- Load current sense
- Current sharing information

In this example, a resistor divider senses the output current as a voltage drop across a sense resistor (RS) and feeds a portion into the ADM1041A. Remote local voltage sense is monitored via V_S+ and V_S− pins. Finally, current sharing information is fed back via the share bus. These three elements are summed together to generate a control signal (V_{CMP}), which closes the loop via an optocoupler to the primary side PWM controller.

Another key feature of the ADM1041A is its control of an OrFET. The OrFET causes lower power dissipation across the OR'ing diode. The main function of the OrFET is to disconnect the power supply from the load in the event of a fault occurring during steady state operation, for example, if a filter capacitor or rectifier fails and causes a short. This eliminates the risk of bringing down the load voltage that is supplied by the redundant configuration of other power supplies. In the case of a short, a reverse voltage is generated across the OrFET. This reverse voltage is detected by the ADM1041A and the OrFET is shut down via the F_G pin. This intervention prevents any interruption on the power supply bus. The ADM1041A can then be interrogated via the serial interface to determine why the power supply has shut down.

This application circuit also demonstrates how temperature can be monitored within a power supply. A thermistor is connected between the VDD and MON2 pins. The thermistor's voltage varies with temperature. The MON2 input can be programmed to trip a flag at a voltage corresponding to an overheating power supply. The resulting action may be to turn on an additional cooling fan to help regulate the temperature within the power supply.

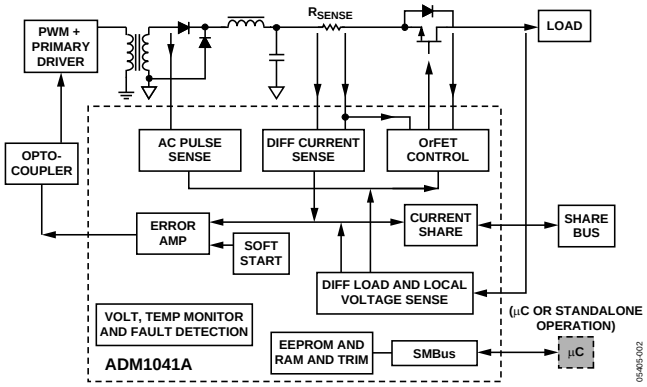

Figure 2. Application Block Diagram

Differences Between the ADM1041A and ADM1041

For all new designs, it is recommended to use the ADM1041A.

The parts differ as follows:

- The ADM1041 allows the internal VREF voltage reference to be accessed at Pin 18. This is not accessible using the ADM1041A.
- The ADM1041A has longer V_{DD}OK debounce and V_{DD}OV debounce than the ADM1041.
- The GND_OK Disable bit (Register 11h) does not disable when using the ADM1041. It does disable when using the ADM1041A.

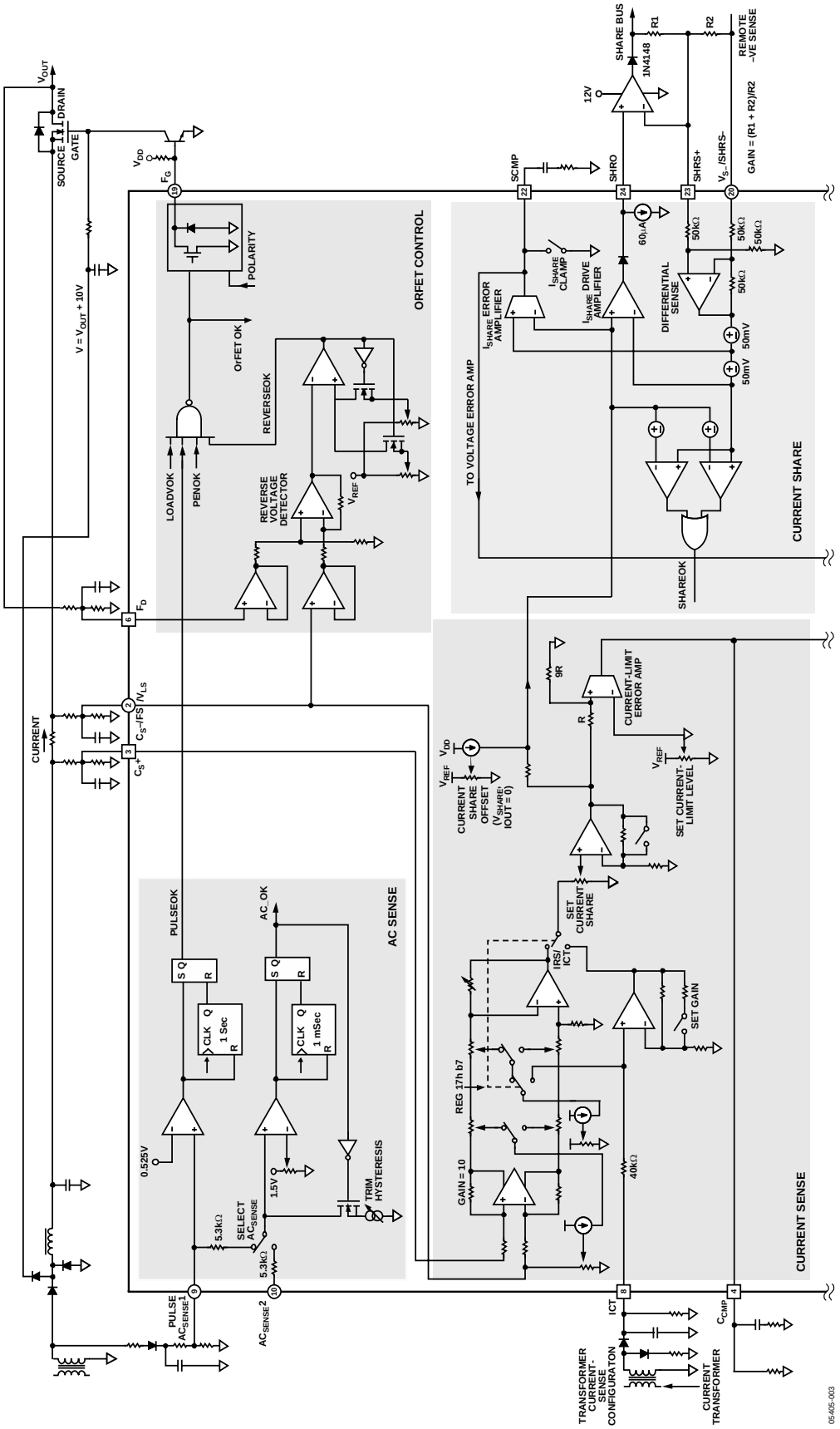

Figure 3. ADM1041A Diagram, Part 1

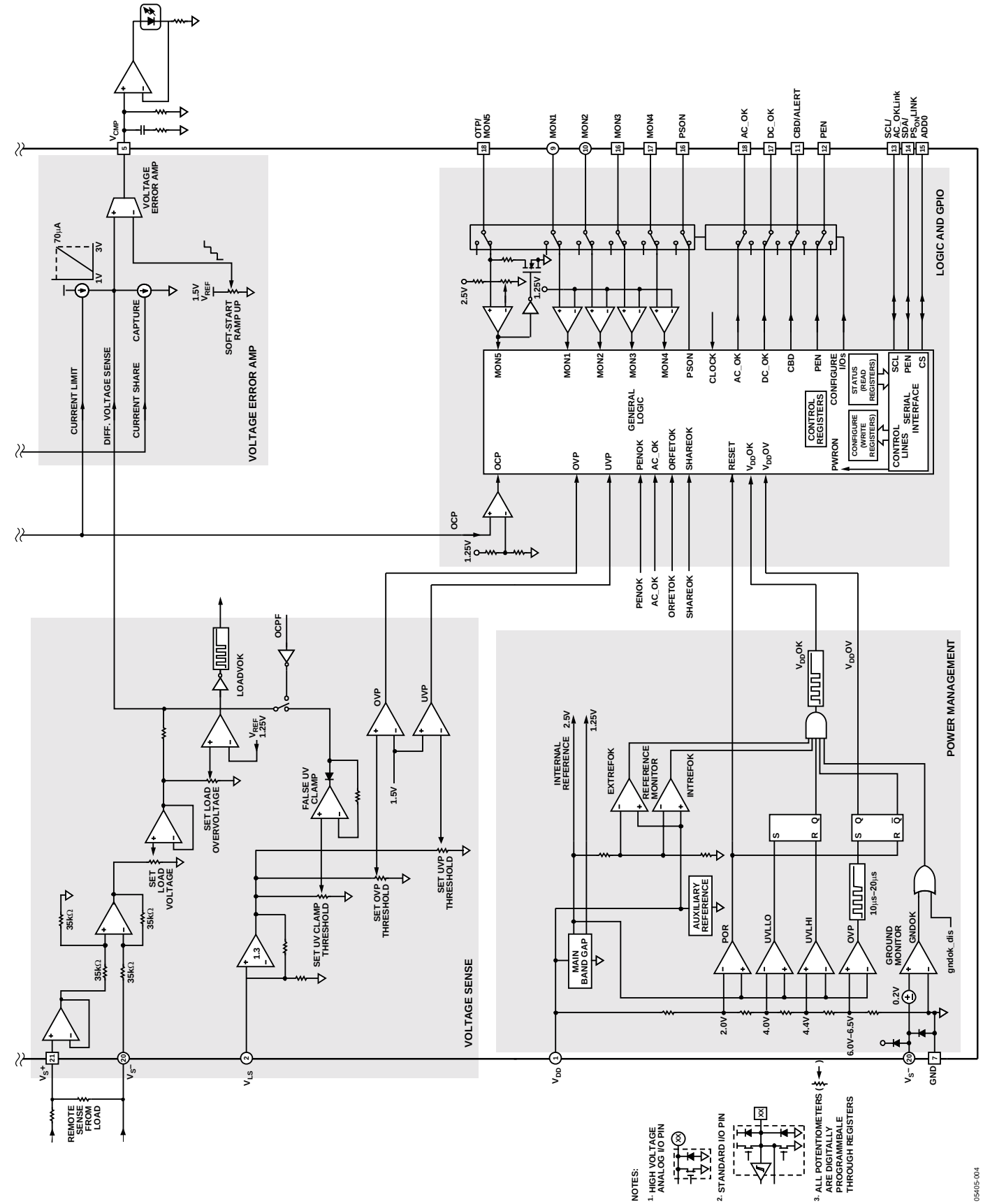

Figure 4. ADM1041A Diagram, Part 2

SPECIFICATIONS

T_A = −40 to +85°C, V_{DD} = 5 V ± 10%, unless otherwise noted.

Table 1.

Parameter	Min	Typ	Max	Unit	Test Conditions/Comments
SUPPLIES					
V_{DD}	4.5	5.0	5.5	V	
I_{DD}, Current Consumption		6	10	mA	
Peak I_{DD}, during EEPROM Erase Cycle[1, 2]			40	mA	
UNDERVOLTAGE LOCKOUT, V_{DD}					See Figure 9.
Start-Up Threshold	4	4.3	4.5	V	
Stop Threshold	3.7	4	4.2	V	
Hysteresis		0.3		V	
POWER BLOCK PROTECTION					
V_{DD} Overvoltage	5.8	6.2	6.5	V	
V_{DD} Overvoltage Debounce	300	500	700	µs	Latching
Open Ground	0.1	0.2	0.35	V	V_{GND} positive with respect to V_S−
V_{DD}OK Debounce	250	400	500	µs	V_{DD}OK
POWER-ON RESET					
DC Level	1.5	2.2	2.75	V	V_{DD} rising
DIFFERENTIAL LOAD VOLTAGE SENSE INPUT, (V_S−, V_S+)					See Figure 6. V_{NOM} = (V_S+ − V_S−); V_{NOM} is typically 2 V
V_S− Input Voltage			0.5	V	Voltage on Pin 20
V_S+ Input Voltage			V_{DD} − 2	V	Voltage on Pin 21
V_S− Input Resistance		35		kΩ	
V_S+ Input Resistance	500			kΩ	
V_{NOM} Adjustment Range		1.7 to 2.3		V	
Set Load Voltage Trim Step		0.10 to 0.14		%	1.7 V ≤ V_{NOM} ≤ 2.3 V typ
		1.74 to 3.18		mV	8 bits, 255 steps
					Reg 19h[7:0]. See Table 34
Set Load Overvoltage Trim Range		105 to 120		%	1.7 V ≤ V_{NOM} ≤ 2.3 V min
Set Load Overvoltage Trim Step		0.09		%	8 bits, 255 step/s
		1.6		mV	Reg 08h[7:0]. See Table 17.
					V_S+ = 2.24 V
Recover from Load OV False to F_G True		100		µs	Reg 03h[1:0] = 00. See Table 12.
		200		µs	Reg 03h[1:0] = 01. See Table 12.
		300		µs	Reg 03h[1:0] = 10. See Table 12.
		400		µs	Reg 03h[1:0] = 11. See Table 12.
Operate Time from Load OV to F_G False		2		µs	

Parameter	Min	Typ	Max	Unit	Test Conditions/Comments
LOCAL VOLTAGE SENSE, V_{LS}, AND FALSE UV CLAMP					See Figure 9.
Input Voltage Range[3]		2.3	(V_{DD} – 2)	V	Set by external resistor divider.
Stage Gain		1.3			At V_{LS} = 1.8 V
False UV Clamp, V_{LS}, Input Voltage Nominal, and Trim Range	1.3	1.85	2.1	V	
Clamp Trim Step		0.2		%	V_{RANGE}
Clamp Trim Step		3.1		mV	8 bits, 255 steps, Reg 18h[7:0]. See Table 33.
Local Overvoltage	1.9	2.4	2.85	V	
Nominal and Trim Range					
OV Trim Step		0.15		%	V_{RANGE}
OV Trim Step		3.7		mV	8 bits, 255 steps Reg 0Ah[7:0]. See Table 19.
Noise Filter, for OVP Function Only	5		25	µs	
Local Undervoltage	1.3	1.7	2.1	V	
Nominal and Trim Range					
UV Trim Step		0.18		%	V_{RANGE}
UV Trim Step		3.1		mV	8 bits, 255 steps, Reg 09h[7:0]. See Table 18.
Noise Filter, for UVP Function Only	300		600	µs	
VOLTAGE ERROR AMPLIFIER, V_{CMP}					See Figure 15.
Reference Voltage $V_{REF_SOFT_START}$	1.49		1.51	V	T_A = 25°C
Temperature Stability[2]		±100		µV/°C	−40°C ≤ T_A ≤ 85°C
Long-Term Voltage Stability[2]		±0.2		%	Over 1,000 hr, T_J = 125°C
Soft-Start Period Range	0		40	ms	Ramp is 7 bit, 127 steps
Set Soft-Start Period		300		µs	Reg 10h[3:2] = 00. See Table 25.
		10		ms	Reg 10h[3:2] = 01. See Table 25.
		20		ms	Reg 10h[3:2] = 10. See Table 25.
		40		ms	Reg 10h[3:2] = 11. See Table 25.
Unity Gain Bandwidth, GBW		1		MHz	See Figure 11.
Transconductance	1.9	2.7	3.5	mA/V	At I_{VCMP} = ±180 µA
Source Current	250			µA	At V_{VCMP} > 1 V
Sink Current	250			µA	At V_{VCMP} < V_{DD} – 1 V
DIFFERENTIAL CURRENT SENSE INPUT, C_S–, C_S+					Reg 17h[7] = 0. See Table 18. I_{SENSE} mode. See Figure 13.
Common-Mode Range	0		(V_{DD} – 2)	V	Set by external divider
External Divider Tolerance Trim Range (With Respect to Input)		−5		mV	Reg 16h[5:3] = 000. See Table 31.
		−10		mV	Reg 16h[5:3] = 001. See Table 31.
		−20		mV	Reg 16h[5:3] = 010. See Table 31.
		5		mV	Reg 16h[5:3] = 100. See Table 31.
		10		mV	Reg 16h[5:3] = 101. See Table 31.
		20		mV	Reg 16h[5:3] = 110. See Table 31.
External Divider Tolerance Trim Step Size		20		µV	V_{CM} = 2.0 V
(With Respect to Input)		39		µV	8 bits, 255 steps
		78		µV	Reg 14h[7:0]. See Table 29.

Parameter	Min	Typ	Max	Unit	Test Conditions/Comments
DC Offset Trim Range (with Respect to Input)		−8		mV	Reg 17h[2:0] = 000. See Table 32 .
		−15		mV	Reg 17h[2:0] = 001. See Table 32.
		−30		mV	Reg 17h[2:0] = 010. See Table 32.
		8		mV	Reg 17h[2:0] = 100. See Table 32.
		15		mV	Reg 17h[2:0] = 101. See Table 32.
		30		mV	Reg 17h[2:0] = 110. See Table 32.
DC Offset Trim Step Size		30		µV	V_{CM} = 2.0 V, V_{DIFF} = 0 V
(with respect to input)		50		µV	8 bits, 255 steps
		120		µV	Reg 15h[7:0]. See Table 30.
CURRENT SENSE CALIBRATION					
Total Current Sense Error[2] (Gain and Offset)					V_{CSCM} = 2.0V, 0°C ≤ T_A ≤ 85°C, SHRS = SHRO = 2 V. Gain = 230x.
		±3		%	Chopper on
		±6		%	Chopper off
Gain Range (I_{SENSE})					Max input voltage range at C_S+, C_S−
Gain Setting 1 (Reg 16h[2:0] = 000)		65		V/V	34 mV – 44.5 mV. Gain = 65×.
Gain Setting 2 (Reg 16h[2:0] = 001)		85		V/V	26 mV – 34 mV. Gain = 85×.
Gain Setting 3 (Reg 16h[2:0] = 010)		110		V/V	20 mV – 26 mV. Gain = 110×.
Gain Setting 4 (Reg 16h[2:0] = 100)		135		V/V	16 mV – 20 mV. Gain = 135×.
Gain Setting 5 (Reg 16h[2:0] = 101)		175		V/V	12 mV – 16 mV. Gain = 175×.
Gain Setting 6 (Reg 16h[2:0] = 110)		230		V/V	9.5 mV – 12 mV. Gain = 230×
Full Scale (No Offset)		2.0		V	V_{ZO} = 0
Attenuation Range		65 to 99		%	Reg 06h[7:1]. See Table 15.
Current Share Trim Step (at SHRO)		0.4		%	SHRS = SHRO = 1 V
		8		mV	7 bits, 127 steps I_{SHARE} slope
Gain Accuracy[2, 4], 40 mV at C_S+, C_S−	−5		+5	%	0 V ≤ V_{CSCM} ≤ 0.3 V. Gain = 65×. V_{CSCM} = input common mode.
Gain Accuracy[2, 4], 20 mV at C_S+, C_S−	−5	±1	+5	%	V_{CSCM} = 2.0 V, 0°C ≤ T_A ≤ 85°C. Gain = 135×
Gain Accuracy[2, 4], 40 mV at C_S+, C_S−	−2.5	±0.5	+2.5	%	V_{CSCM} = 2.0 V, 0°C ≤ T_A ≤ 85°C. Gain = 65×
SHARE BUS OFFSET					See Figure 13.
Current Share Offset Range	1.25			V	Reg 17h[7] = 1. See Table 32. Reg 17h[5] = 1. See Table 32.
Zero Current Offset Trim Step					0 ≤ V_{TRIM} ≤ 1.25 V
		0.4		%	8 bits, 255 steps, V_{CT} = 1.0 V
		5.5		mV	Reg 05h[7:0]. See Table 14.
CURRENT TRANSFORMER SENSE INPUT, I_{CT}					Reg 17h[7] = 1. See Table 32. Reg 06h = FEh. See Table 15.
Gain Setting 0		4.5		V/V	Reg 17h[5] = 0, V_{SHARE} = 2 V. See Table 31
Gain Setting 1		2.57		V/V	Reg 17h[5] = 1. See Table 32. Reg 15h = 05h, approx 1 µA. See Table 30. V_{SHARE} = 2 V.
CT Input Sensitivity	0.45	0.5	0.68	V	Gain setting = 4.5
CT Input Sensitivity	0.79	1.0	1.20	V	Gain setting = 2.57
Input Impedance[2]	20	50		kΩ	
Source Current		2.0		µA	See Current-Transformer Input Section.
Source Current Step Size		170		nA	15 steps Reg 15h[3:0]. See Table 30.
Reverse Current for Extended SMBus Addressing (Source Current)[5]	3.5	5	7	mA	See Figure 38 and the Absolute Maximum Ratings section.

Parameter	Min	Typ	Max	Unit	Test Conditions/Comments
CURRENT LIMIT ERROR AMPLIFIER					See Figure 13
Current Limit Trim Range[2]	105		130	%	After I_{SHARE} calibration
Current Limit Trim Step		1.1		%	
Current Limit Trim Step		26.5		mV	$2.0 \leq V_{SHARE} \leq 2.8$ V typ, 5 bits, 31 steps. Reg 04h[7:3]. See Table 13.
Transconductance	100	200	300	µA/V	$I_{CCMP} = \pm 20$ µA. See Figure 12.
Output Source Current		40		µA	$V_{CCMP} = >1$ V
Output Sink Current		40		µA	$V_{CCMP} = <V_{DD} - 1$ V
CURRENT SHARE DRIVER					See Figure 15
Output Voltage[6]	(V_{DD} – 0.4)			V	$R_L = 1$ kΩ, $V_{SHRS} \leq V_{DD} - 2$ V
Short Circuit Source Current			55	mA	
Source Current			15	mA	Current at which V_{OUT} does not drop by more than 5%
Sink Current		60	100	µA	$V_{SHARE} = 2.0$ V
CURRENT SHARE DIFFERENTIAL SENSE AMPLIFIER					See Figure 15
V_S– Input Voltage			0.5	V	Voltage on Pin 20
V_{SHRS} Input Voltage			$V_{DD} - 2$	V	Voltage on Pin 23
Input Impedance[2]	65	100		kΩ	$V_{SHRS} = 0.5$ V, $V_S- = 0.5$ V
Gain		1.0		V/V	
CURRENT SHARE ERROR AMPLIFIER					
Transconductance, SHRS to SCMP	100	200	300	µA/V	$I_{SCMP} = \pm 20$ µA
Output Source Current		40		µA	$V_{SCMP} > 1$ V
Output Sink Current		40		µA	$V_{SCMP} < V_{DD} - 1$ V
Input Offset Voltage	40	50	60	mV	Master/slave arbitration
Share OK Window Comparator Threshold (Share Drive Error)					SHRS = 2 V ± SHR_{THRESH}
		±100		mV	Reg 04h[1:0] = 00. See Table 13.
		±200		mV	Reg 04h[1:0] = 01. See Table 13.
		±300		mV	Reg 04h[1:0] = 10. See Table 13.
		±400		mV	Reg 04h[1:0] = 11. See Table 13.
CURRENT LIMIT					Figure 10
Current Limit Control Lower Threshold	1.3			V	$V_{CCMP} = 0.7$ V, $V_S+ = 1.5$ V
Current Limit Control Upper Threshold			3.5	V	$V_S+ = 0$ V, $V_{SCMP} = 0$ V
CURRENT SHARE CAPTURE					$V_{SCMP} = 3.5$ V.
Current Share Capture Range	0.7	1	1.3	%	Reg 10h[5:4] = 00. See Table 25.
	1.4	2	2.6	%	Reg 10h[5:4] = 01. See Table 25.
	2.1	3	3.9	%	Reg 10h[5:4] = 10. See Table 25.
	2.8	4	5.2	%	Reg 10h[5:4] = 11. See Table 25.
Capture Threshold	0.6	1.0	1.4	V	
FET OR GATE DRIVE					Open-drain N-channel FET
Output Low Level (On)			0.4	V	$I_{IO} = 5$ mA
			0.8	V	$I_{IO} = 10$ mA
Output Leakage Current	−5		+5	µA	
REVERSE VOLTAGE COMPARATOR, FS, FD					V_{CS-} = FS
Common-Mode Range	0.25	2.0	(V_{DD} – 2)	V	Voltage set by C_S resistor divider. Voltage on C_S– pin, $T_A = 25$°C.

Parameter	Min	Typ	Max	Unit	Test Conditions/Comments
Reverse Voltage Detector Turn-Off Threshold					V_{CS}− = 2 V for threshold specs
		100		mV	Reg 03h[7:6] = 00. See Table 12.
		150		mV	Reg 03h[7:6] = 01. See Table 12.
		200		mV	Reg 03h[7:6] = 10. See Table 12.
		250		mV	Reg 03h[7:6] = 11. See Table 12.
Reverse Voltage Detector Turn-On Threshold					V_{CS}− = 2 V for threshold specs
		20		mV	Reg 03h[5:4] = 00. See Table 12.
		30		mV	Reg 03h[5:4] = 01. See Table 12.
		40		mV	Reg 03h[5:4] = 10. See Table 12.
		50		mV	Reg 03h[5:4] = 11. See Table 12.
FD Input Impedance	500			kΩ	
FS Input Impedance		20		kΩ	
$AC_{SENSE}1/AC_{SENSE}2$ COMPARATOR					Reg 12h[2] = 0 Reg 0Dh[3:2] = 00. See Table 22 .
AC or Bulk Sense					Reg 12h[2] = 1 Reg 0Eh[7:6] = 00. See Table 23.
Threshold Voltage		1.25		V	
Threshold Adjust Range	1.10		1.40	V	Min: DAC = 0 Max: DAC = Full Scale
Threshold Trim Step		0.8		%	1.10 ≤ V_{TRIM} ≤ 1.4 V
		10		mV	5 bits, 31 steps Reg 0Ch[7:3]. See Table 21.
Hysteresis Adjust Range		200–550		mV	$V_{ACSENSE}$ > 1 V, $R_{THEVENIN}$ = 909R
Hysteresis Trim Step		50		mV	200 ≤ V_{TRIM} ≤ 550 mV. 7 steps Reg 0Ch[2:0]. See Table 21.
Noise Filter	0.6	1	1.2	ms	
PULSE-IN					
Threshold Voltage		0.525		V	
PULSE_OK On Delay		1		µs	
PULSE_OK Off Delay	0.8	1	1.2	s	
OSCILLATOR	−5		+5	%	Unless otherwise specified
OCP					
OCP Threshold Voltage[2]	0.3	0.5	0.7	V	Force C_{CMP} for drop in V_{CMP} Reg 11h[2] = 0. See Table 26.
OCP Shutdown Delay Time (Continuous Period in Current Limit)		1		s	Reg 12h[4:3] = 00. See Table 27.
		2		s	Reg 12h[4:3] = 01. See Table 27.
		3		s	Reg 12h[4:3] = 10. See Table 27.
		4		s	Reg 12h[4:3] = 11. See Table 27.
OCP Fast Shutdown Delay Time	0		100	ms	Reg 11h[2] = 1. See Table 26. VC_{CMP} = 1.5 V
MON1, MON2, MON3, MON4					
Sense Voltage	1.21	1.25	1.29	V	
Hysteresis		0.1		V	
OVP Noise Filter	5		25	µs	
UVP Noise Filter	300		600	µs	
OTP (MON5)					Reg 0Fh[4:2] = 01x or 10x. See Table 24.
Sense Voltage Range	2.2		2.45	V	
OTP Trim Step		24		mV	2.1 ≤ V_{TRIM} ≤ 2.45 V 4 bits, 15 steps, Reg 0Bh[7:4]. See Table 20.
Hysteresis	100	130	160	µA	V_{OTP} = 2 V

Parameter	Min	Typ	Max	Unit	Test Conditions/Comments
OVP Noise Filter	5		25	µs	Reg 0Fh[4:2] = 010 or 100. See Table 24.
UVP Noise Filter	300		600	µs	Reg 0Fh[4:2] = 011 or 101. See Table 24.
PSON[7]					Reg 0Eh[4:2] = 00x. See Table 23.
Input Low Level[8]			0.8	V	
Input High Level[8]	2.0			V	
Debounce		80		ms	Reg 0Fh[1:0] = 00. See Table 24.
		0		ms	Reg 0Fh[1:0] = 01. See Table 24.
		40		ms	Reg 0Fh[1:0] = 10. See Table 24.
		160		ms	Reg 0Fh[1:0] = 11. See Table 24.
PEN[7], DC_OK[7], CBD, AC_OK					
Open-Drain N-Channel Option					
Output Low Level = On[8]			0.4	V	I_{SINK} = 4 mA
Open-Drain P-Channel					V_{OH_PEN}
Output High Level = On[8]	2.4			V	I_{SOURCE} = 4 mA
Leakage Current	−5		+5	µA	
DC_OK[7]					Reg 0Fh[7:5] = 00x. See Table 24.
DC_OK, On Delay (Power-On and OK Delay)		400		ms	Reg 0Eh[1:0] = 00. See Table 23.
		200		ms	Reg 0Eh[1:0] = 01. See Table 23.
		800		ms	Reg 0Eh[1:0] = 10. See Table 23.
		1600		ms	Reg 0Eh[1:0] = 11. See Table 23.
DC_OK, Off Delay (Power-Off Early Warning)		2		ms	Reg 10h[7:6] = 00. See Table 25.
		0		ms	Reg 10h[7:6] = 01. See Table 25.
		1		ms	Reg 10h[7:6] = 10. See Table 25.
		4		ms	Reg 10h[7:6] = 11. See Table 25.
SMBus, SDL/SCL					
Input Voltage Low[8]			0.8	V	
Input Voltage High[8]	2.2			V	
Output Voltage Low[8]			0.4	V	V_{DD} = 5 V, I_{SINK} = 4 mA
Pull-Up Current	100		350	µA	
Leakage Current	−5		+5	µA	
ADD0, HARDWIRED ADDRESS BIT					
ADD0 Low Level[8]			0.4	V	
ADD0 Floating		$V_{DD}/2$		V	Floating
ADD0 High[8]	V_{DD} − 0.5			V	
SERIAL BUS TIMING					See Figure 5
Clock Frequency			400	kHz	
Glitch Immunity, t_{SW}			50	ns	
Bus Free Time, t_{BUF}	4.7			µs	
Start Setup Time, $t_{SU;STA}$	4.7			µs	
Start Hold Time, $t_{HD;STA}$	4			µs	
SCL Low Time, t_{LOW}	4.7			µs	
SCL High Time, t_{HIGH}	4			µs	
SCL, SDA Rise Time, t_R			1000	ns	
SCL, SDA Fall Time, t_F			300	ns	
Data Setup Time, $t_{SU;DAT}$	250			ns	
Data Hold Time, $t_{HD;DAT}$	300			ns	
EEPROM RELIABILITY					
Endurance[9]	100	250		k cycles	
Data Retention[10]	100			Years	

[1] This specification is a measure of I_{DD} during an EEPROM page erase cycle. The current is a dynamic. Refer to Figure 29 for a typical I_{DD} plot during an EEPROM page erase.
[2] This specification is not production tested, but is supported by characterization data at initial product release.
[3] Four external divider resistors are the same ratio, which is selected to produce 2.0 V nominal at Pin 21 while at zero load current. Recommended values are

	3.3 V	5.0 V	12 V
R_{TOP}	680R	1K.5	5K1
R_{BOTTOM}	1K	1K	1K

[4] Chopper off.
[5] The maximum specification here is the maximum source current of Pin 8 as specified by the Absolute Maximum Ratings.
[6] All internal amplifiers accept inputs with common range from GND to V_{DD} − 2 V. The output is rail-to-rail, but the input is limited to GND to V_{DD} − 2 V. See Figure 6.
[7] These pins can be configured as open-drain N-channel or P-channel, (except PSON) and as normal or inverted logic polarity.
[8] A logic true or false is defined strictly according to the signal name. Low and high refer to the pin or signal voltages.
[9] Endurance is qualified to 100,000 cycles as per JEDEC Std. 22, Method A117, and measured at −40°C, +25°C, and +85°C. Typical endurance at +25°C is 250,000 cycles.
[10] Retention lifetime equivalent at junction temperature (T_J) = 55°C as per JEDEC Std. 22, Method A117. Retention lifetime based on an activation energy of 0.6 V. Derates with junction temperature.

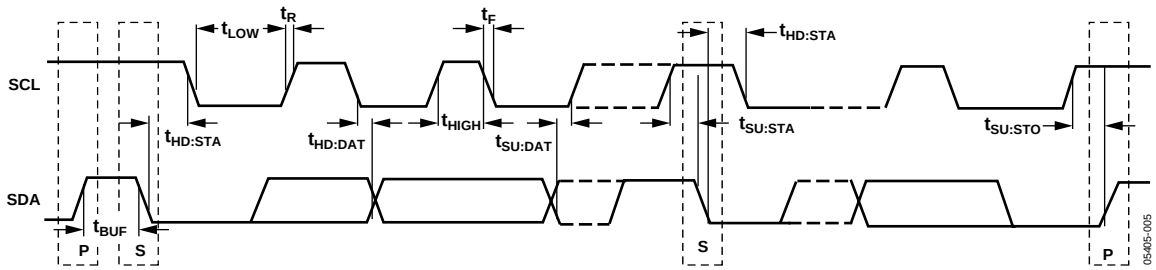

Figure 5. Serial Bus Timing Diagram

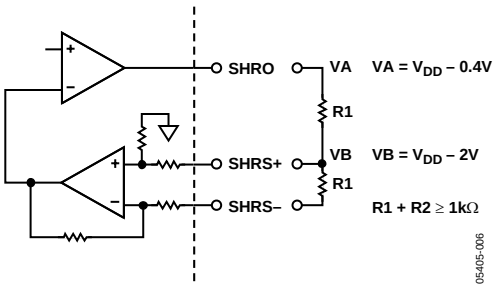

Figure 6. Amplifier Inputs and Outputs

ABSOLUTE MAXIMUM RATINGS

Table 2.

Parameter	Rating
Supply Voltage (Continuous), V_{DD}	6.5 V
Data Pins SDA, SCL, V_{DATA}	V_{DD} + 0.5 V, GND − 0.3 V
Continuous Power at 25°C, $P_{D\text{-}QSOP24}$	450 mW
Operating Temperature, T_{AMB}	−40°C to +85°C
Junction Temperature, T_J	150°C
Storage Temperature, T_{STG}	−60°C to +150°C
Lead Temperature (Soldering, 10 Seconds), T_L	300°C
ESD Protection on All Pins, V_{ESD}	2 kV
Thermal Resistance, Junction to Air, θ_{JA}	150°C/W
ICT Source Current[1]	7 mA

[1] This is the maximum current that can be sourced out from Pin 8 (ICT pin).

Stresses above those listed under Absolute Maximum Ratings may cause permanent damage to the device. This is a stress rating only; functional operation of the device at these or any other conditions above those indicated in the operational section of this specification is not implied. Exposure to absolute maximum rating conditions for extended periods may affect device reliability.

THERMAL CHARACTERISTICS

24-lead QSOP: θ_{JA} = 150°C/W

ESD CAUTION

ESD (electrostatic discharge) sensitive device. Electrostatic charges as high as 4000 V readily accumulate on the human body and test equipment and can discharge without detection. Although this product features proprietary ESD protection circuitry, permanent damage may occur on devices subjected to high energy electrostatic discharges. Therefore, proper ESD precautions are recommended to avoid performance degradation or loss of functionality.

PIN CONFIGURATION AND FUNCTION DESCRIPTIONS

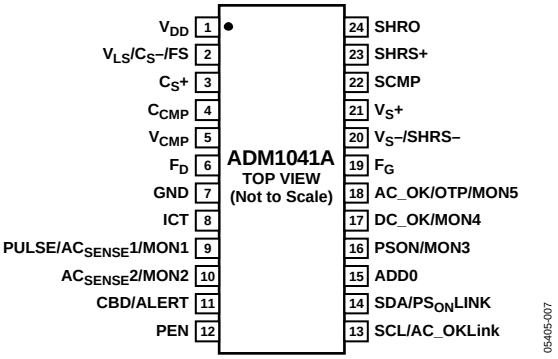

Figure 7. Pin Configuration

Table 3. Pin Function Descriptions

Pin No.	Mnemonic	Description
1	V_{DD}	Positive Supply for the ADM1041A. Normal range is 4.5 V to 5.5 V. Absolute maximum rating is 6.5 V.
2	$V_{LS}/C_S–/FS$	Inverting Differential Current Sense Input, Local Voltage Sense Pin, and OrFET Source. These three functions are served by a common divider. The local voltage sense input is used for local overvoltage and undervoltage sensing. This pin also provides an input to the false UV clamp that prevents shutdown during an external load overvoltage condition. When supporting an OrFET circuit, this pin represents the FET source and is the inverting input of a differential amplifier looking for the presence of a reverse voltage across the FET, which might indicate a failure mode.
3	C_S+	Noninverting Differential Current Sense Input. The differential sensitivity of C_S+ and $C_S–$ is normally around 10 mV to 40 mV at the input to the ADM1041A. Nulling any external divider offset is achieved by injecting a trimmable amount of current into either the inverting or noninverting input of the second stage of the current sense amplifier. A compensation circuit is used to ensure the amount of current for zero-offset tracks the common-mode voltage. Nulling of any amplifier offset is done in a similar manner except that it does not track the common-mode voltage.
4	C_{CMP}	Current Error Amplifier Compensation. This pin is the output of the current limit transconductance error amplifier. A series resistor and a capacitor to ground are required for loop compensation.
5	V_{CMP}	Voltage Error Amplifier Compensation. This is the output of a voltage error transconductance amplifier. Compensate with a series capacitor and resistor to ground. An external emitter-follower or buffer is typically used to drive an optocoupler. Output voltage positioning may be obtained by placing a second resistor directly to ground. Refer to Analog Devices applications notes on voltage positioning.
6	F_D	A divider from the OrFET drain is connected here. A differential amplifier is then used to detect the presence of a reverse voltage across the FET, which indicates a fault condition and causes the OrFET gate to be pulled low.
7	GND	Ground. This pin is double bonded for extra reliability. If the ground pin goes positive with respect to the remote sense return ($V_S–$) for a sustained period indicating that the negative remote sense line is disconnected, PEN is disabled.
8	ICT	Input for Current Transformer. The sensitivity of this pin is suitable for the typical 0.5 V to 1 V signal that is normally available. If this function is enabled, the C_S+ amplifier is disabled. This pin is also used for extended SMBus addressing, that is, pulled below ground to allow additional SMBus addresses.
9	PULSE/AC_{SENSE}1/MON1	Pulse Present, AC/Bulk Sense 1, or Monitor 1 Input. PULSE: This tells the OrFET circuit that the voltage from the power transformer is normal. A peak hold allows the OrFET circuit to pass through the pulse skipping that occurs with very light loads, but turns off the circuit about one second after the last pulse is recognized. AC_{SENSE}1: This sense function also uses the peak voltage on this pin to measure the bulk capacitor voltage. If too low, AC_OK and DC_OK can warn of an imminent loss of power. Threshold level and hysteresis can be trimmed. When not selected, AC_{SENSE}1 defaults to true. MON1: When MON1 is selected for this pin, its input is compared against a 1.25 V comparator that could be used for monitoring a postregulated output; includes overvoltage, undervoltage, and overtemperature conditions.

Pin No.	Mnemonic	Description
10	$AC_{SENSE}2$/MON2	AC/Bulk Sense Input 2 or Monitor 2 Input. $AC_{SENSE}2$: This alternative AC_{SENSE} input can be used when the AC_{SENSE} source must be different from that used for the OrFET. It also allows dc and optocoupled signals that are not suitable for the OrFET control. MON2: When MON2 is selected for this pin, its input is compared against a 1.25 V comparator that could be used for monitoring a postregulated output; includes overvoltage, undervoltage, and overtemperature conditions.
11	CBD/ALERT	CBD: The crowbar drive pin allows implementation of a fast shutdown in case of a load overvoltage fault. The pin can be configured as an open-drain N-channel or P-channel and is suitable for driving a sensitive gate SCR crowbar. An external transistor is required if a high gate current is needed. Either polarity may be selected. ALERT: This pin can be configured to provide an ALERT function in microprocessor-supported applications where any of several ICs in a redundant system that detects a problem can interrupt and shut down the power supply. An alternative use is as a general-purpose logic output signal.
12	PEN	Power Enable. This pin can be configured as an open-drain N-channel or P-channel that typically drives the PEN optocoupler. Providing that the PSON pin has been asserted to turn the output on, and that there are no faults, this pin drives an optocoupler on enabling the primary PWM circuit. Either polarity may be selected.
13	SCL/AC_OKLink	SCL: SMBus Serial Clock Input. AC_OKLink: In nonmicroprocessor applications, this pin can be programmed to give the status of AC_{SENSE} to all the ICs on the same bus. The main effect is to turn on undervoltage blanking whenever the sense circuit monitoring ac or bulk dc detects a low voltage.
14	SDA/PS_{ON}LINK	SDA: SMBus Serial Data Input and Output. PS_{ON}LINK: In non-microprocessor applications, this pin can be programmed to provide the PSON status to other ICs. This allows just one IC to be the PSON interface to the host system, or the PS_{ON}LINK itself can be the PSON interface.
15	ADD0	Chip Address Pin. There are three addresses possible using this pin, which are achieved by tying ADD0 to ground, tying to V_{DD}, or being left to float. One address bit is available via programming at the device/daughter card level, so the total number of addressable ICs can be increased to six.
16	PSON/MON3	PSON: In nonmicroprocessor configurations, this is power supply on. As a standard I/O, this pin is rugged enough for direct interface with a customer's system. Either polarity may be selected. MON3: When MON3 is selected for this pin, its input is compared against a 1.25 V comparator that could be used for monitoring a postregulated output; includes overvoltage, undervoltage, and overtemperature conditions.
17	DC_OK/MON4	DC_OK: This pin is the output of a general-purpose digital I/O that can be configured as open-drain N-channel or open-drain P-channel suitable for wire-OR'ing with other ICs and direct interfacing with a customer's system. Either polarity may be selected. MON4: When MON4 is selected for this pin, its input is compared against a 1.25 V comparator that could be used for overtemperature protection and for monitoring a postregulated output; includes overvoltage, undervoltage, and overtemperature conditions.
18	AC_OK/OTP/ MON5	Buffered Output, Overtemperature Protection, or Monitor 5. AC_OK: This option can be configured as N-channel or P-channel and as normal or inverted polarity. At system level, a true AC_OK is used to indicate that the primary bulk voltage is high enough to support the system and, when false, that dc output is about to fail. MON5: A further option is to configure this as an analog input, MON5, with a flexible hysteresis and trimmable 2.5 V reference. This makes the pin particularly suitable for overtemperature protection (OTP) sensing. Since hysteresis uses a switched 100 µA current source, hysteresis can be adjusted via the source impedance of the external circuit. It can also be used for OVP and UVP functions.
19	F_G	FET Gate Enable. When supporting an OrFET circuit, this is the gate drive pin. Because the open-drain voltage on the chip is limited to V_{DD}, an external level shifter is required to drive the higher gate voltages suitable for the OrFET. This pin is configured as an open-drain N-channel. Either output polarity, low = on or low = off, may be selected.
20	V_S–/SHRS–	This pin is used as the ground input reference for the current share and load voltage sense circuits. It should be tied to ground at the common remote sense location. The input impedance is about 35 kΩ to ground.
21	V_S+	This pin is the positive remote load voltage sense input and is normally divided down from the power supply output voltage to 2.0 V at no-load using an external voltage divider. The input impedance is high.
22	SCMP	Output of the Current Share Transconductance Error Amplifier. Compensation is a series capacitor and resistor to ground. While V_{DD} is normal and PEN is false, this pin is clamped to ground. When the converter is enabled (PEN true) and the clamp is released, the compensation capacitor charges, providing a slow walk-in. The error amplifier input has a built-in bias so that all slaves in a parallel supply system do not compete with the master for control of the share bus.

Pin No.	Mnemonic	Description
23	SHRS+	Current Share Sense. This is the noninverting input of a differential sense amplifier looking at the voltage on the share bus. For testing purposes, this pin is normally connected to SHRO. Calibration always expects this pin to be at 2.0 V with respect to SHRS−/V_S−. If a higher share voltage is required, a resistor divider from SHRO or an additional gain stage, must be used.
24	SHRO	Current Share Output. This output is capable of driving the share bus of several power supplies between 0 V and V_{DD} − 0.4 V (10 kΩ bus pull-down in each supply). Where a higher share bus voltage is required, an external amplifier is necessary. The current share output from the supply, when bused with the share output of other power supplies working in parallel, allows each of the supplies to contribute essentially equal currents to the load.

Table 4. Default Pin States During EEPROM Download

Pin No.	Mnemonic	State
11	CBD	High impedance (Hi-Z) at power-up and until the end of the EEPROM download (approximately 20 ms). This pin is reconfigured at the end of the EEPROM download.
12	PEN	High impedance (Hi-Z) at power-up and until the end of the EEPROM download (approximately 20 ms). This pin is reconfigured at the end of the EEPROM download.
17	DC_OK	Active low (low if DC_OK true) at power-up. This pin is reconfigured during the EEPROM download.
18	AC_OK	Active low (low if DC_OK true) at power-up. This pin is reconfigured during the EEPROM download.
19	F_G	High impedance (Hi-Z) at power-up and until the end of the EEPROM download (approximately 20 ms). This pin is reconfigured at the end of the EEPROM download.

TERMINOLOGY

Table 5.

Mnemonic	Description
POR	Power-On Reset. When VDD is initially applied to the ADM1041A, the POR function clears all latches and puts the logic into a state that allows a clean start-up.
UVL	Undervoltage Lockout. This is used on VDD to prevent spurious modes of operation that might occur if VDD is below a specific voltage.
CVMode	Constant Voltage Mode. This is the normal mode of operation of the power supply main output. The output voltage remains constant over the whole range of current specified.
CCMode	Constant Current Mode. This mode of operation occurs when the output is overloaded until or unless a shutdown event is triggered. The output current control level remains constant down to 0 V.
UVP	Undervoltage Protection. If the output being monitored is detected as going under voltage, the UVP function sends a fault signal. After a delay, PEN goes false, the output is disabled, and either latch-off or an autorestart occurs, depending on the mode selected. The DC_OK output also goes false immediately to show that the output is out of tolerance.
OVP	Overvoltage Protection. If the output being monitored is detected as going over voltage, the OVP function latches and sends a fault signal, PEN goes false, and CBD goes true. The DC_OK output also goes false immediately. OVP faults are always latching and require the cycling of PSON or VDD or SMBus command to reset the latch.
OCP	Overcurrent Protection. If the output being monitored is detected as going over current for a certain time, the OCP function sends out a fault signal that triggers a shutdown that can be latched or allowed to autorestart, depending on the mode selected. Prior to shutting down, the DC_OK output goes false warning the system that output is going to be lost. The latch is the same one used for OVP. For autorestart, the OCP timeout period is configurable.
OTP	Overtemperature Protection. If the temperature being sensed is detected as going over the selected limit, the OTP function sends out a fault signal that triggers a shutdown that can be latched or allowed to auto-restart depending on the mode selected. Prior to shutting down, the DC_OK output goes false warning the system that output is going to be lost. The latch is the same one used for OVP.
UVB	Undervoltage Blanking. The UVP function is blanked (disabled) during power-up or if the ACSENSE function is false (ac line voltage is low). When in constant current mode, UVB is disabled. The status of ACSENSE must be known to the IC, either by virtue of the on-board ACSENSE or communicated by the SMBus with the help of an external microprocessor or by using AC_OKLink. When in constant-current mode, due to an overload, UVB is applied for the overcurrent ride-through period.

Mnemonic	Description
DC_OK	The DC_OK function advises the system on the status of the power supply. When it is false, the system is assured of at least 1 ms of operation if ac power is lost for any reason. Other turn-off modes provide more warning time. This pin is an open-drain output. It can be configured as a P-channel pull-up or an N-channel pull-down. It may also be configured as positive or negative (inverted) logic.
AC_OK	The AC_OK function advises the system whether or not sufficient bulk voltage is present to allow reliable operation. The system may choose to shut down if this pin is false. The power supply normally tries to maintain normal operation as long as possible, although DC_OK goes false when only a millisecond or so of operation time is left. This pin is an open-drain output. It can be configured as a P-channel pull-up or an N-channel pull-down. It may also be configured as positive or negative (inverted) logic.
DC_OK on delay	The DC_OK output is kept false for typically 100 ms to 900 ms during power-up.
DC_OK off delay	When the system is to be shut down in response to PSON going low, or in response to an OCP or OTP event, a signal is first sent to the DC_OK output to go false as a warning that power is about to be lost. PEN is signaled false typically 2 ms later (configurable).
Debounce Digital Noise Filter	All of the inputs to the logic core are first debounced or digitally filtered to improve noise immunity. The debounce period for OV events is in the order of 16 µs, for UV events it is 450 µs, and for PSON it is typically 80 ms (configurable).
ACSENSE1	A voltage from the secondary of the power transformer, which can provide an analog of the bulk supply, is rectified and lightly filtered and measured by the ac sense function. At start-up, if this voltage is adequate, this function signals the end-user system that it is okay to start. If a brown-out occurs or ac power is removed, this function can provide early warning that power is about to be lost and allow the system to shut down in an orderly manner. While ACSENSE is low, UVB is enabled, which means undervoltage protection is not initiated. If ac power is so low that the converter cannot continue to operate, other protection circuits on the primary side normally shut down the converter. When an adequate voltage level is resumed, a power-up cycle is initiated.
Pulse OK	As well as providing ACSENSE, the preceding connection to the transformer is used to gate the operation of the OrFET circuit. If the output of the transformer is good, the OrFET circuit allows gate drive to the OrFET.
AC Hysteresis	ACSENSE Hysteresis. Configurable voltage on the ACSENSE input allows the ACSENSE upper and lower threshold to be adjusted to suit different amounts of low frequency ripple present on the bulk capacitor.
ACSENSE2	An alternate form of ac sense can be accepted by the ADM1041A. This may in the form of an opto-coupled signal from the primary side where the actual level sensing might be done. As with the above, while ac is low and UVB is disabled, AC_OK is false and DC_OK is true. Any brownout protection that might be required on the primary is done on the primary side.
Soft-Start	At start-up, the voltage reference to the voltage error amplifier is brought up slowly in approximately 127 steps to provide a controlled rate of rise of the output voltage.
VDD–OVP	An OVP fault on the auxiliary supply to the ADM1041A causes a standard OVP operation (see the OVP function in this table).
VDD–UVL	A UVL fault on the auxiliary supply to the IC causes a standard UVP operation (see the UVP function in this table).
Auto Restart Mode	In this mode, the housekeeping circuit attempts to restart the supply after an undervoltage event at about 1 second intervals. No other fault can initiate auto-restart.
VREF–MON	The internal precision reference is monitored by a separate reference for overvoltage and allows truly redundant OVP. The externally available reference is also monitored for an undervoltage that would indicate a short on the pin.
GND–MON	The internal ground is constantly monitored against the VS- pin. If the chip ground goes positive with respect to this pin, it indicates that the chip ground is open-circuit either inside the ADM1041A or the external wiring. The ADM1041A would be latched off, similar to an OV event.

THEORY OF OPERATION

POWER MANAGEMENT

This block contains V_{DD} undervoltage lockout circuitry and a power-on/reset function. It also provides precision references for internal use and a buffered reference voltage, V_{REF}. Overloading, shorting to ground, or shorting to VDD do not effect the internal references. See Figure 8.

During power-on, V_{REF} does not come up until V_{DD} exceeds the upper UVL threshold. Housekeeping components in this block include reference voltage monitors, a V_{DD} overvoltage monitor, and a ground fault detector.

The ground fault detector monitors ADM1041A ground with respect to the remote sense pin V_S–. If GND becomes positive with respect to V_S–, an on-chip signal, V_{DD}OK, goes false.

V_{DD}OK is true only when all the following conditions are met: ground is negative with respect to VS–, INTREF and EXTREF are operating normally, V_{DD} > UVLHI, and V_{DD} < V_{DD} OVP threshold.

GAIN TRIMMING AND CONFIGURATION

The various gain settings and configurations throughout the ADM1041A are digitally set up via the SMBus after it has been loaded onto its printed circuit board. There is no need for external trim potentiometers. An initial adjustment process should be carried out in a test system. Other adjustments such as current sense and voltage calibration should be carried out in the completed power supply.

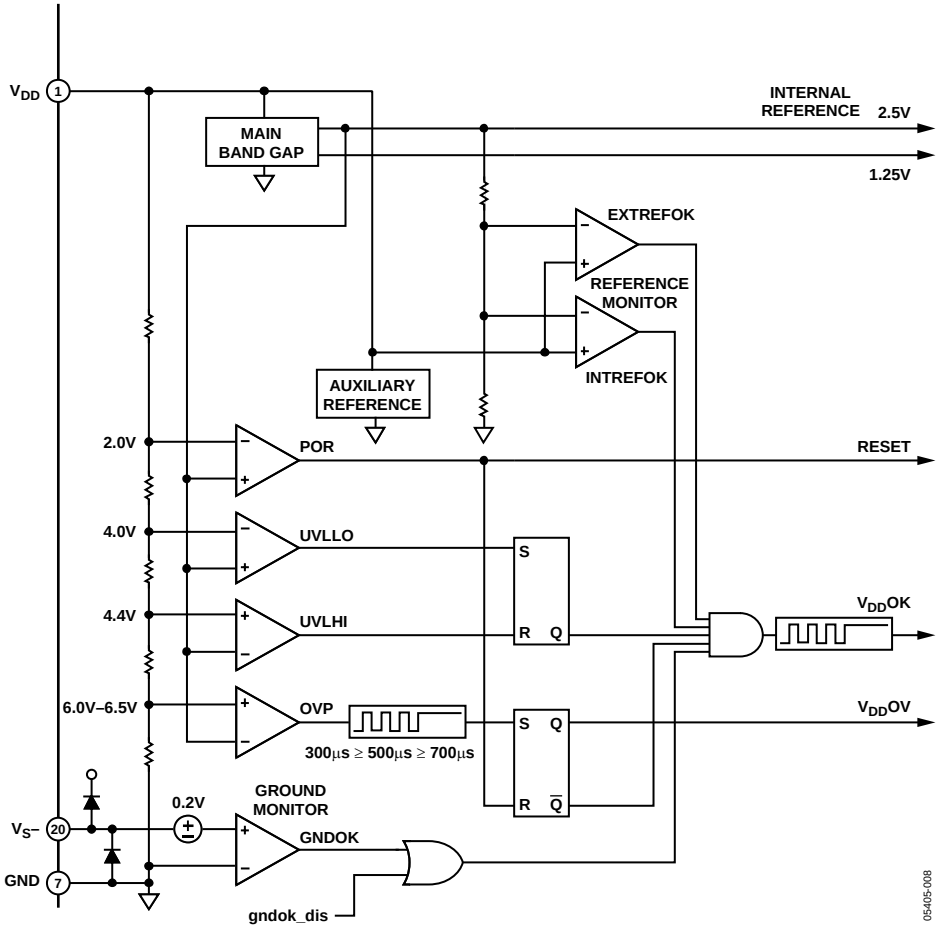

Figure 8. Block Diagram of Power Management Section

DIFFERENTIAL REMOTE SENSE AMPLIFIER

This amplifier senses the load voltage and is the main voltage feedback input. A differential input is used to compensate for the voltage drop on the negative output cable of the power supply. An external voltage divider should be designed to set the VS+ pin to approximately 2.0 V with respect to VS–. The amplifier gain is 1.0. See Figure 9.

SET LOAD VOLTAGE

The load voltage may be trimmed via the SMBus by a trim stage at the output of the differential remote sense amplifier. The voltage at the output of the trimmer is 1.50 V when the voltage loop is closed. See Figure 9.

LOAD OVERVOLTAGE (OV)

A comparator at the output of the load voltage trim stage detects load overvoltage. The load OV threshold can be trimmed via the SMBus. The main purpose is to turn off the OrFET when the load voltage rises to an intermediate over-voltage level that is below the local OVP level. This circuit is nonlatching. See Figure 9.

LOCAL VOLTAGE SENSE

This amplifier senses the output voltage of the power supply just before the OrFET. Its input is derived from one of the pins used for current sensing and is set to 2.0 V by an external voltage divider. The amplifier gain is 1.3. See Figure 9.

LOCAL OVERVOLTAGE PROTECTION (OVP)

This is the main overvoltage detection for the power supply. It is detected locally so that only the faulty power supply shuts down in the event of an OVP condition in an N + 1 redundant power system. This occurs only after a load OV event. The local OVP threshold may be trimmed via the SMBus. See Figure 9.

LOCAL UNDERVOLTAGE PROTECTION (UVP)

This is the main undervoltage detection for the power supply. It is also detected locally so that a faulty power supply can be detected in an N+1 redundant power system. The local UVP threshold may be trimmed via the SMBus. See Figure 9.

FALSE UV CLAMP

If a faulty power supply causes an OVP condition on the system bus, the control loop in the good power supplies is driven to zero output. Therefore, a clamp is required to prevent the good power supplies from indicating an undervoltage, and to ensure they must recover quickly after the faulty power supply has shut down. The false UV clamp achieves this by clamping the output voltage just above the local UVP threshold. It may be trimmed via the SMBus. The OCPF signal disables the clamp during overcurrent faults. See Figure 9.

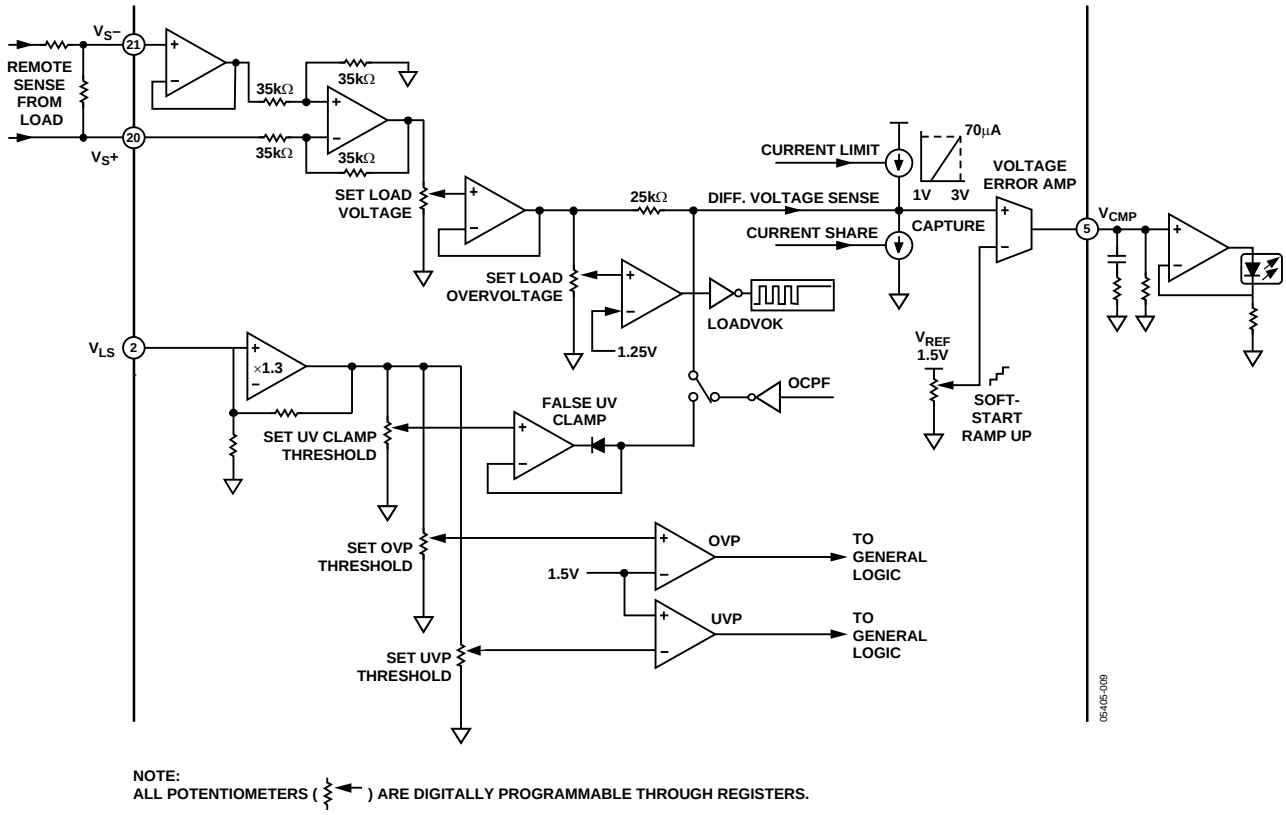

Figure 9. Block Diagram of Voltage-Sense Amplifier

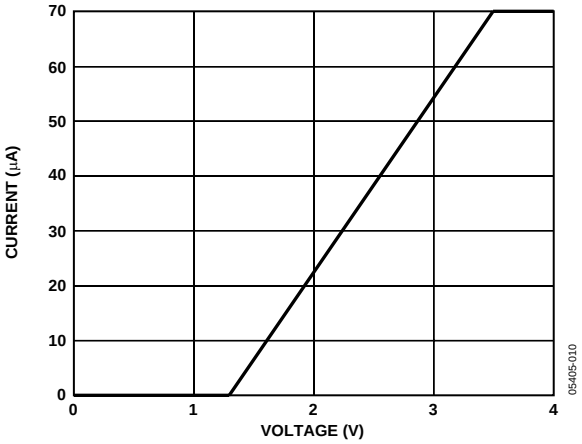

Figure 10. Current Limit

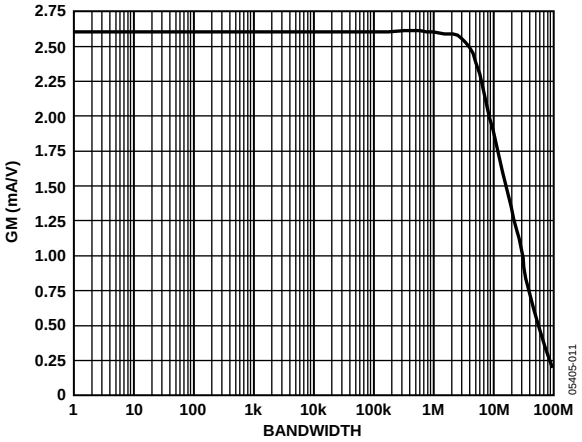

Figure 11. V_{CMP} Transconductance

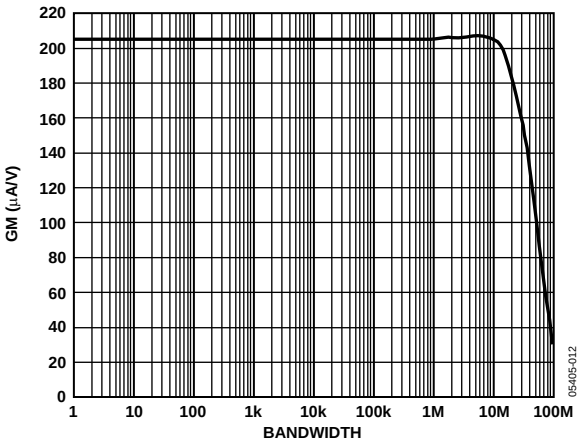

Figure 12. C_{CMP} and S_{CMP} Transconductance

VOLTAGE ERROR AMPLIFIER

This is a high gain transconductance amplifier that takes its input from the load voltage trim stage described previously. The amplifier requires only the output pin for loop compensation, which typically consists of a series RC network-to-common. A parallel resistor may be added to common to reduce the open-loop gain and thereby provide some output voltage droop as output current increases. The output of the amplifier is typically connected to an emitter follower that drives an optocoupler, which in turn controls the duty of the primary side PWM. The emitter follower should have a high gain to minimize loading effects on the amplifier. Alternatively, an op amp voltage follower may be used. See Figure 11.

MAIN VOLTAGE REFERENCE

A 1.5 V reference is connected to the inverting input of the voltage error amplifier. This 1.5 V reference is the output voltage of the soft-start circuit. Under closed-loop conditions, the voltage at the noninverting input is also controlled to 1.5 V. During start-up, the output voltage should be ramped up in a linear fashion at a rate that is independent of the load current. This is achieved by digitally ramping up the reference voltage by using a counter and a DAC. The ramp rate is configurable via the SMBus. See Figure 13.

CURRENT-SENSE AMPLIFIER

This is a two-stage differential amplifier that achieves low offset and accuracy. The amplifier has the option to be chopped to reduce offset or left as a linear amplifier without chopping. Refer to the Register Listing for more details. The amplifier's gain can be selected from three ranges. It is followed by a trim stage and then by a low gain buffer stage that can be configured with a gain of 1.0 or 2.1. The result is a total of six overlapping gain ranges (65 to 230), one of which must be selected via the SMBus. This gives ample adjustment to compensate for the poor initial tolerance of the resistance wires typically used for current sensing. It also allows selecting a higher sensitivity for better efficiency or a lower sensitivity for better accuracy (lower offset). The amplifier offset voltage is trimmed to zero in a once-off operation via the SMBus and uses a voltage-controlled current source at the output of the first gain stage. A second controlled current source is used to trim out the additional offset due to the mismatch of the external divider resistors. This offset trim is dynamically adjusted according to the common-mode voltage present at the top of the voltage dividers. Six ranges are selectable according to the magnitude and polarity of this offset component. Because the offset compensation circuit itself has some inaccuracies, the best overall current-sense accuracy is obtained by using more closely matched external dividers and then selecting a low compensation range. See Figure 13.

CURRENT SENSING

Current is typically sensed by a low value resistor in series with the positive output of the power supply, positioned just before the OrFET or diode. For high voltages (12 V and higher), this resistor is usually placed in the negative load. A pair of closely matched voltage dividers connected to Pins 2 and 3 divide the common-mode voltage down to approximately 2.0 V. The divider ratio must be the same as used in the local and remote voltage-sense circuits. Alternatively, current may be sensed by a current transformer (CT) connected to Pin 8. The ADM1041A must be configured via the SMBus to select one or the other. See Figure 13.

CURRENT-TRANSFORMER INPUT

The ADM1041A can also be configured to sense current by using a CT connected to Pin 8. In this case, the resistive current sense is disabled. A separate single-ended amplifier has two possible sensitivities that are selected via the SMBus. If the CT option is selected, the gain of the 1.0, 2.1 buffer that follows the gain trim stage is no longer configurable and is fixed at 1.0.

The share driver amplifier has a total of 100 mV positive offset built into it. To use the device in CT mode, it is necessary to compensate for this additional 100 mV offset. This is achieved by adding in a positive offset on the CT input. This also allows any negative amplifier offsets in the CT chain to be nulled out.

This offset cancellation is achieved by sourcing a current through a resistance on the ICT pin. The resistor value is 40 kΩ and so for 100 mV of offset cancellation a current of 2.5 μA is required. It is possible to fine trim this current via Register 15h, Bits 4–0, step size 170 nA. For example, 2.5 μA ≈ 15 × 170 nA; so the code for Register 15h is decimal 15 or 0Fh. Refer to the Current Transformer parameter in the Specifications table for more details. See Figure 13.

CURRENT-SENSE CALIBRATION

Regardless of which means is used to sense the current, the end result of the calibration process should produce the standard current share signal between Pins 20 and 23, that is, 2.0 V at 100% load, excluding any additional share signal offset that might be configured.

CURRENT-LIMIT ERROR AMPLIFIER

This is a low gain transconductance amplifier that takes its input from one of the calibrated current stages described previously. The amplifier requires only the output pin for loop compensation, which typically consists of a series RC network-to-common. A trimmable reference provides a wide range of adjustment for the current limit. When the current signal reaches the reference voltage, the output of the error amplifier comes out of saturation and begins to drive a controlled current source. The control threshold is nominally 1.0 V. This current flows through a resistor in series with the trimmed voltage loop signal and thereby attempts to increase the voltage signal above the 1.5 V reference for that loop. The closed voltage loop reacts by reducing the power supply's output voltage and this results in constant current operation. See Figure 13.

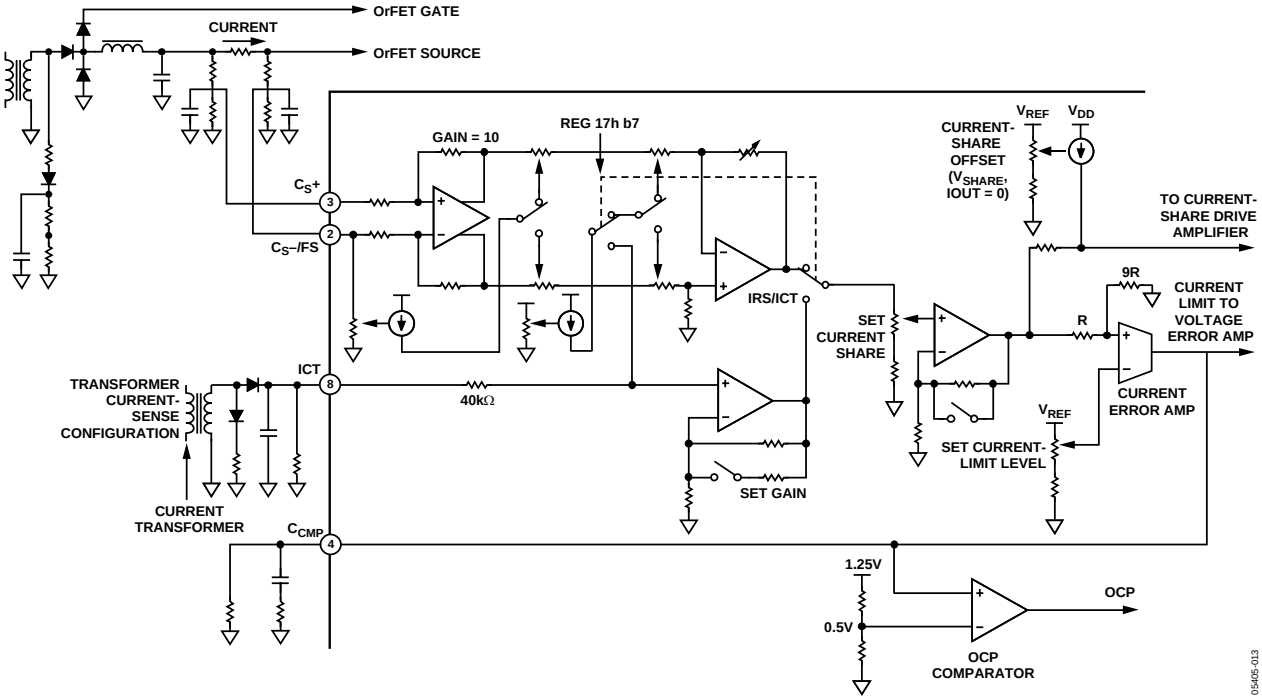

Figure 13. Current Sense

OVERCURRENT PROTECTION

When the current limit threshold is reached, the OCP comparator detects when the current error amplifier comes out of saturation. Its threshold is nominally 0.5 V. This starts a timer that, when it times out, causes an OCP condition to occur and the power supply to shut down. If the current limit disappears before the time has expired, the timer is reset. The time period is configurable via the SMBus. Undervoltage blanking is applied during the timer operation. See Figure 15.

CURRENT SHARE

The current-share method is the master–slave type, which means that the power supply with the highest output current automatically becomes the master and controls the share bus signal. All other power supplies become slaves, and the share bus signal causes them to increase their output voltages slightly until their output currents are almost equal to that of the master. This scheme has two major advantages. A failed master power supply simply allows one of the slaves to become the new master. A short-circuited share signal disables current sharing, but all power supplies default to their normal voltage setting, allowing a certain degree of passive sharing. Because this chip uses a low voltage process, an external bidirectional amplifier is needed for most existing share bus signal levels. The voltage between Pins 20 and 23 is always controlled to 2.0 V full scale, ignoring any offset. By connecting Pins 20 and 23 together, the chip can produce a 2.0 V share signal directly without any external circuits. To improve accuracy, the share signal is referenced to the remote voltage sense negative (VS-) pin.

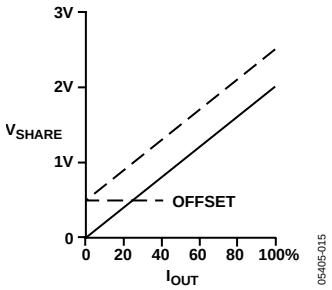

Figure 14. Load Share Characteristic

CURRENT-SHARE OFFSET

To satisfy some customer specifications, the current-share signal can be offset by a fixed amount by using a trimmable current generator and a series resistor. The offset is added on top of the 2.0 V full-scale, current-share output signal. See Figure 15.

I_{SHARE} DRIVE AMPLIFIER

This amplifier is a buffer with enough current source capability to drive the current-share circuits of several slave power supplies. It has negligible current sink capability. Refer to the Differential Sense Amplifier section.

DIFFERENTIAL SENSE AMPLIFIER

This amplifier has unity gain and senses the difference between the share bus voltage and the remote voltage sense negative pin. When the power supply is the master, it forms a closed loop with the I_{SHARE} drive amplifier described previously, and therefore it causes the share bus voltage between Pins 20 and 23 to equal the current-share signal at the noninverting input of the I_{SHARE} drive amplifier. When the power supply is a slave, the output of the differential-sense amplifier exceeds the internal current share signal, which causes the I_{SHARE} drive amplifier to be driven into cutoff. Because it is not possible to trim out negative offsets in the op amps in the current-share chain, a 50 mV voltage source is used to provide a known fixed positive offset. The share bus offset controlled current source must be trimmed via the SMBus to take out the resulting overall offset. See Figure 15.

I_{SHARE} ERROR AMPLIFIER

This is a low gain transconductance amplifier that measures the difference between the internal current share voltage and the signal voltage on the external share bus. If two power supplies have almost identical current-share signals, a 50 mV voltage source on the inverting input helps arbitrate which power supply becomes the master and prevents hunting between master and slave roles. The amplifier requires only the output pin for loop compensation, which typically consists of a series RC network to common. When the power supply is a slave, the output of the error amplifier comes out of saturation and begins to drive a controlled current sink. The control threshold is nominally 1.0 V. This current flows from a resistor in series with the trimmed voltage loop signal and thereby attempts to decrease the voltage signal below the 1.5 V reference for that loop. The closed voltage loop reacts by increasing the power supply's output voltage until current share is achieved. The maximum current sink is limited so that the power supply voltage can be increased only a small amount, which is usually limited to be within the customer's specified voltage regulation limit. This small voltage increase also limits the control range of the current-share circuit and is called the capture range. The capture range may be set via the SMBus to one of four values, from 1% to 4% nominal. See Figure 15.

I_{SHARE} CLAMP

This clamp keeps the current share-loop compensation capacitor discharged when the current share is not required to operate. The clamp is released during power-up when the voltage reference and therefore the output voltage of the power supply has risen to either 75% or 88% of its final value. This is configurable via the SMBus. When the clamp is released, the current share loop slowly walks in the current share and helps to avoid output voltage spikes during hot swapping. See Figure 15.

SHARE_OK DETECTOR

Incorrect current sharing is a useful early indicator that there is some sort of noncatastrophic problem with one of the power supplies in a parallel system. Two comparators are used to detect an excessive positive or negative error voltage at the input of the I_{SHARE} error amplifier, which indicates that the current share loop has lost control. One of four possible error levels must be configured via the SMBus. See Figure 15.

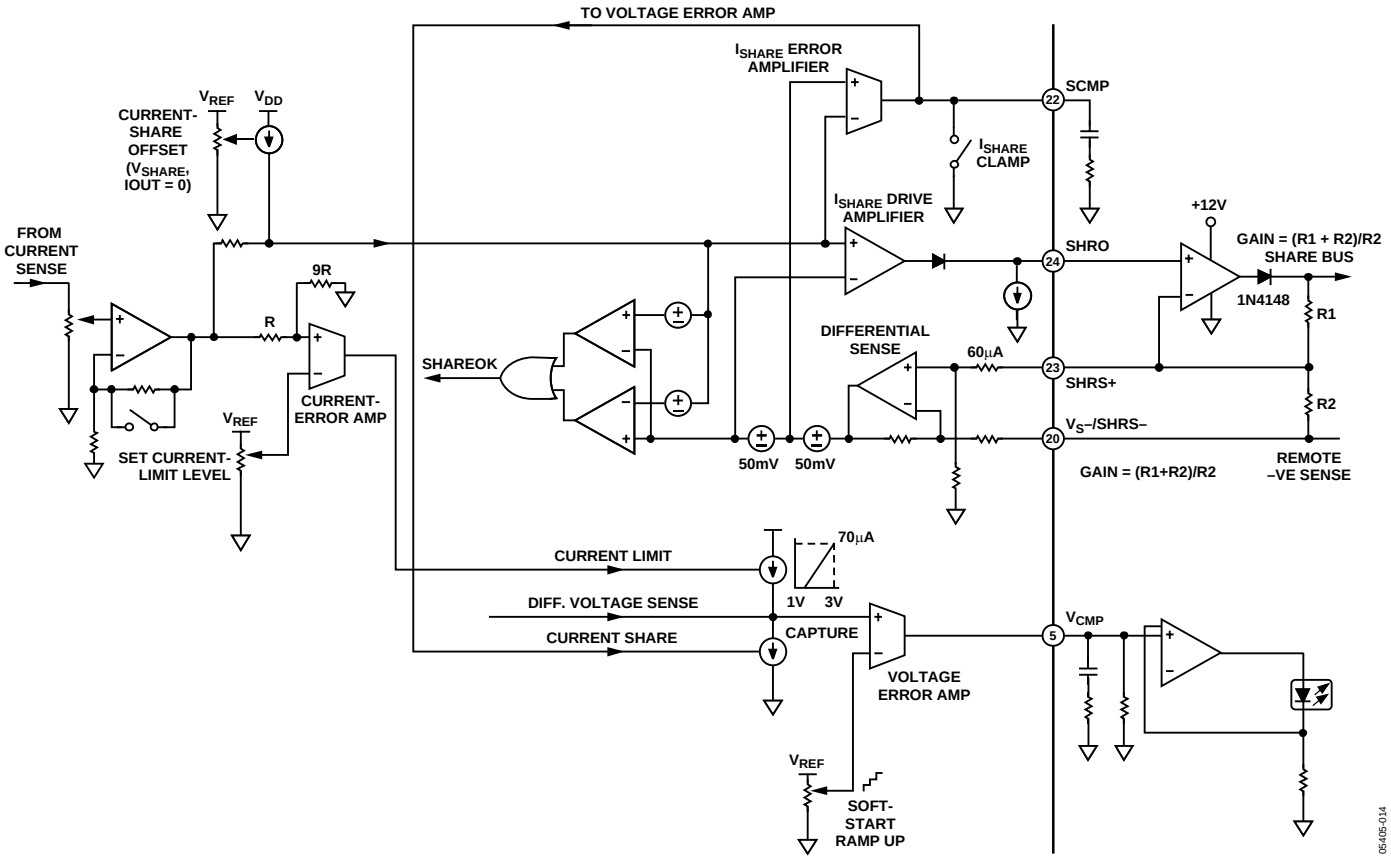

Figure 15. Current-Share Circuit and Soft Start

PULSE/$AC_{SENSE}2$

When configured, PULSE and AC_{SENSE} monitor the output of the power main transformer. See Figure 16.

PULSE

Providing the output of the pulse function (PULSE_OK) is high, the FET in the OR'ing circuit can be turned on. If the pulses stop for any reason, about 1 second later the PULSE_OK goes low and the OrFET drive is disabled. This delay allows passage of all expected pulse skipping modes that might occur in no load or very light load situations. See Figure 16.

AC_{SENSE}

This is rarely used to measure the ac input to the supply directly. $AC_{SENSE}1$ or $AC_{SENSE}2$ are usually used to measure, indirectly, the voltage across the bulk capacitor so that the system can be signaled that power is normal. Also if power is actually lost, AC_{SENSE} represents when just enough energy is left for an orderly shutdown of the power supply. See Figure 16.

The ac sense function monitors the amplitude of the incoming pulse and, if sufficiently high, generates a flag to indicate that the ac, or strictly speaking, the voltage on the bulk capacitor, is okay. Because the envelope of the pulse has a considerable amount of 100 Hz ripple, hysteresis is available on this input pin. Internally there is a 20 µA to 80 µA current sink. With a 909R external Thevenin resistance, this current range translates to a voltage hysteresis of 200 mV to 500 mV. The internal hysteresis current is turned off when the voltage exceeds the reference on the comparator. This form of hysteresis allows simple scaling to be implemented by changing the source impedance of the pulse-conditioning circuit. Some trimming of hysteresis and threshold voltage is provided. The ac sense function can be configured to be derived from $AC_{SENSE}2$ rather than $AC_{SENSE}1$. This allows a separate dc input from various locations to be used to generate AC_OK for better flexibility or accuracy.

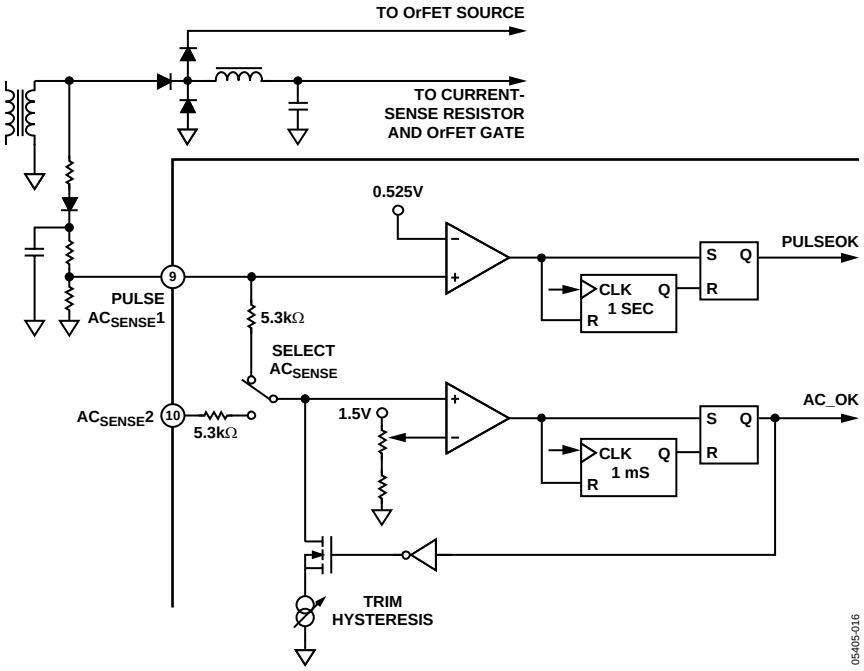

Figure 16. Pulse In and AC_{SENSE} Circuit

OrFET GATE DRIVE

When configured, this block provides a signal to turn on/off an OrFET used in the output of paralleled power supplies. The gate drive voltage of one of these FETs is typically 6 V to 10 V above the output voltage. Because the output voltage of the ADM1041A is limited, an external transistor needs to be used. The block diagram shows an example of this approach. See Figure 21.

The F_G output is an open-drain, N-channel MOSFET and is normally high, which holds the OrFET off. When all the start-up conditions are correct, Pin 19 is pulled low, which allows the OrFET to turn on. The logic can also be configured as inverted if a noninverting drive circuit is used.

A differential amplifier monitors the voltage across the OrFET and has two major functions. First, during start-up, it allows the OrFET to turn on with almost 0 V across it to avoid voltage glitches on the bus. This applies to a hot bus or a cold bus. The internal threshold can be configured from 20 mV to 50 mV (negative), which is scaled up by the external voltage dividers.

Second, if a rectifier or filter capacitor fails during steady state operation, it detects the resulting reverse voltage across the OrFET's on-resistance and turns off the OrFET before a voltage dip appears on the bus. The internal threshold can be configured from 100 mV to 250 mV (negative), which is also scaled up by the external voltage dividers. A slightly larger filter capacitor may be used on the voltage divider at Pin 6 to speed up this function.

Figure 17 shows the typical response time of the ADM1041A to such an event. In the plot, V_{FD} is ramped down and the response time of the F_G pin to a reverse voltage event on the F_D pin is seen. This simulates the rectifier or filter capacitor failure during steady-state operation. When the F_D voltage is below 1.9 V (2 V minus 100 mV threshold), the F_G pin reacts. As can be seen, the response time is approx 330 nsecs. This extremely fast turn-off is vital in an n+1 power supply system configuration. It ensures that the damaged power supply removes itself from the system quickly. Figure 18 shows the equivalent response time to turn on the OrFET. As can be seen, there is a delay of approximately 500 ns before the FG pin ramps down to turn on the OrFET, allowing the power supply to contribute to the system. This propagation delay is due mainly to internal amplifier response limitations. The circuit in Figure 21 is used to generate these plots. In this case, the resistor to V_{DD} from the FG pin is 2 kΩ.

Figure 19 and Figure 20 show the OrFET turn-off time and turn-on time when the F_G pin polarity is inverted. As can be seen, to turn off the OrFET, the V_{FG} pin now transitions from high to low. Also, its corresponding turn-on event occurs from a low-to-high transition. The circuit in Figure 21 is used to generate these plots.

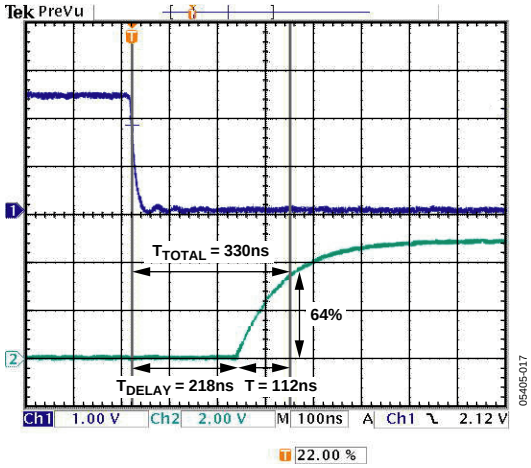

Figure 17. OrFET Turn-Off Time (Default Polarity)

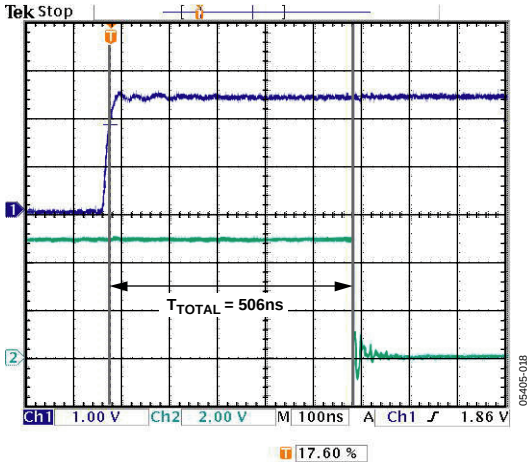

Figure 18. OrFET Turn-On Time (Default Polarity)

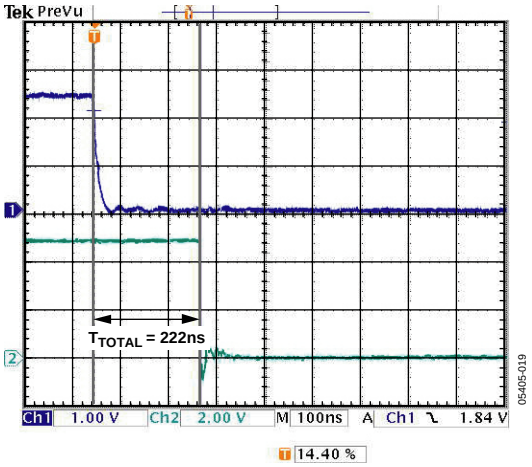

Figure 19. OrFET Turn- Off Time (Inverse Polarity)

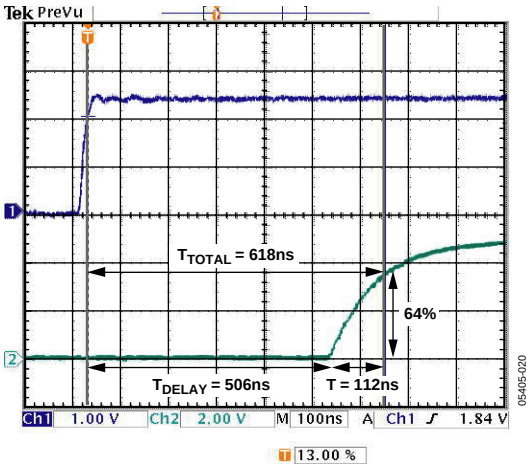

Figure 20. OrFET Turn-On Time (Inverse Polarity)

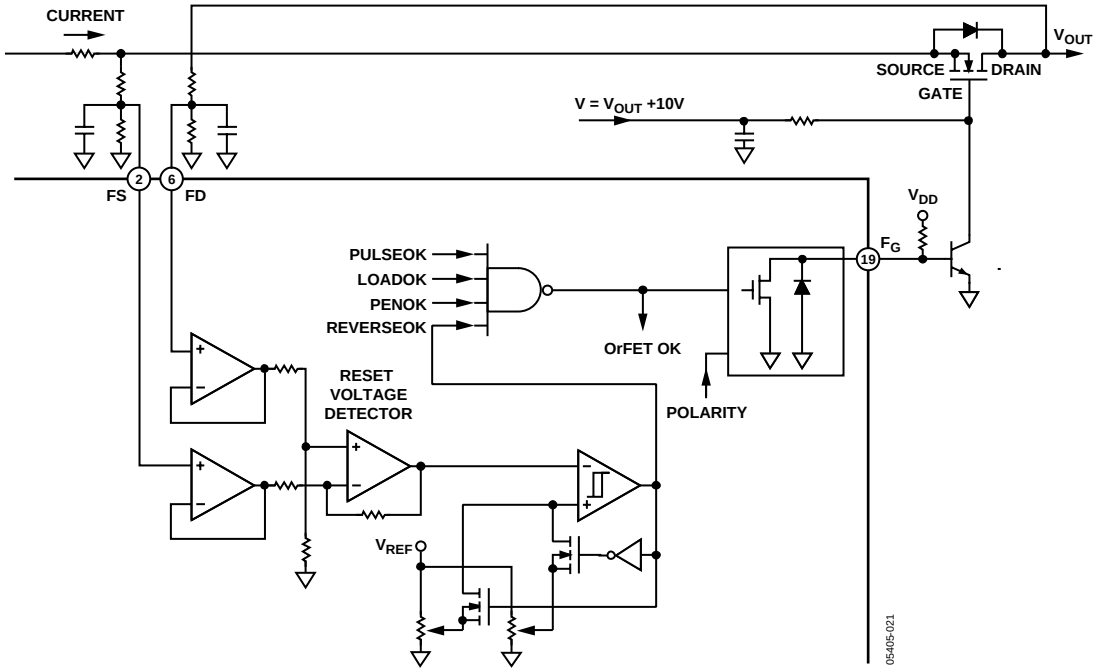

Figure 21. OrFET Gate Drive Circuit

OSCILLATOR AND TIMING GENERATORS

An on-board oscillator is used to generate timing signals. Some trimming of the oscillator is provided to adjust for variations in processing.

All timing generated from the oscillator is expected to meet the same tolerances as the oscillator. Because individual delay counters are generally two to three bits, the worst error is one clock period into these counters, which is 25% of the nominal delay period. None of these tolerances are extremely critical.

LOGIC I/O AND MONITOR PINS

Apart from pins required for the various key analog functions, a number of pins are used for logic level I/O signals. If the logic I/O function is not required, the pins may be reconfigured as general-purpose comparators for analog level monitoring (MON) and may be additionally configured to have typical OVP and UVP properties, either positive-going or negative-going, depending on whether a positive supply output or a negative supply output is being monitored. The status of all protection and monitoring comparators is held in registers that can be read by a microprocessor via the SMBus. Certain control bits may be written to via the SMBus.

CBD/ALERT

This pin can be used either as a crowbar driver or as an SMBus alert signal to indicate that a fault has occurred. It is typically configured to respond to a variety of status flags, as detailed in Registers 1Ah and 1Bh. The primary function of this pin is as a crowbar driver, and as such it should be configured to respond to the OV fault status flag. It can be configured to respond to any or all of a variety of fault status flags, including a microprocessor writable flag, and can be configured as latching or nonlatching. It may also be configured as an open-drain N-channel or P-channel MOSFET and as positive or negative (inverted) logic. A pull-up or pull-down resistor is required. This pin may be wire-OR'ed with the same pin on other ADM1041A's in the power supply.

The alternative function is an SMBus alert output that can be used as an interrupt to a microprocessor. If a fault occurs, the microprocessor can then query the ADM1041A(s) about the fault status. This is intended to avoid continuously polling the ADM1041A(s).

Routinely, the microprocessor needs to gather other data from the ADM1041A(s), which can include the fault status, so the ALERT function may not be used. Also, the simplest microprocessors may not have an interrupt function. This allows the CBD/ALERT pin to be used for other functions.

MON1

This is the alternative analog comparator function for the Pulse/$AC_{SENSE}1$ pin (Pin 9). The threshold is 1.25 V. When MON1 is selected, $AC_{SENSE}1$ defaults to true.

MON2

This is the alternative analog comparator function for the $AC_{SENSE}2$ pin (Pin 10). The threshold is 1.25 V. When MON2 is selected, $AC_{SENSE}2$ defaults to true.

PEN

This is the power enable pin that turns the PWM converter on and can be configured as active high or low. This might drive an opto-isolator back to the primary side or connect to the enable pin of a secondary-side post regulator.

PSON

This pin is usually connected to the customer's PSON signal and, when asserted, causes the ADM1041A to turn on the power output. It can be configured as active high or low. Alternatively, a microprocessor can communicate the PSON function to the ADM1041A using the SMBus, or the PS_{ON}LINK signal may be used. When the PSON pin is not used as such, it can be configured as an analog input, MON3.

MON3

This is the alternative analog comparator function for the PSON pin (Pin 16). The threshold is 1.25 V. When MON3 is selected, PSON defaults to off.

DC_OK (POWER-OK, POWER Good, Etc.)

This output is true when all dc output voltages are within tolerance and goes false to signify an imminent loss of power. (Timing is programmable, see the register description). It can be configured as an open-drain, N-channel or P-channel MOSFET and as positive or negative (inverted) logic. A pull-up or pull-down resistor is required. This pin may be wire-OR'ed with the same pin on other ADM1041As in the power supply. When the DC_OK pin is not used as such, it can be configured as an analog input, MON4.

MON4

This is the alternative analog comparator function for the DC_OK pin (Pin 17). The threshold is 1.25 V.

AC_OK

This output is true when either $AC_{SENSE}1$ or $AC_{SENSE}2$ is true (configurable). It can be configured as an open-drain, N-channel or P-channel MOSFET and as positive or negative (inverted) logic. A pull-up or pull-down resistor is required. This pin can be wire-OR'ed with the same pin on other ADM1041As in the power supply. When the AC_OK pin is not used as such, it can be configured as an analog input, MON5, or as a voltage reference.

MON5

This is the alternative analog comparator function for the AC_OK pin (Pin 18). The threshold is 2.5 V, and it has a 100 µA current source that allows hysteresis to be controlled by adjusting the external source resistance. It is ideal for an OTP sensing circuit using a thermistor as part of a voltage divider. The OTP condition can be configured to latch off the power supply (similar to OVP) or to allow an autorestart (soft OTP). See Figure 22.

In Figure 22, MON2 and MON3 are configured to monitor a negative 12 V rail. MON2 is configured as negative-going OVP, and MON3 is configured as positive-going UVP. The 5 V power rail is used for bias voltage.

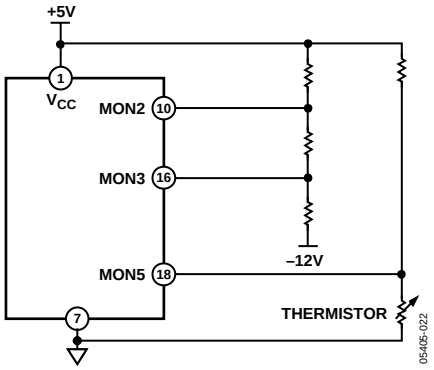

Figure 22. Example of MON Pin Configuration

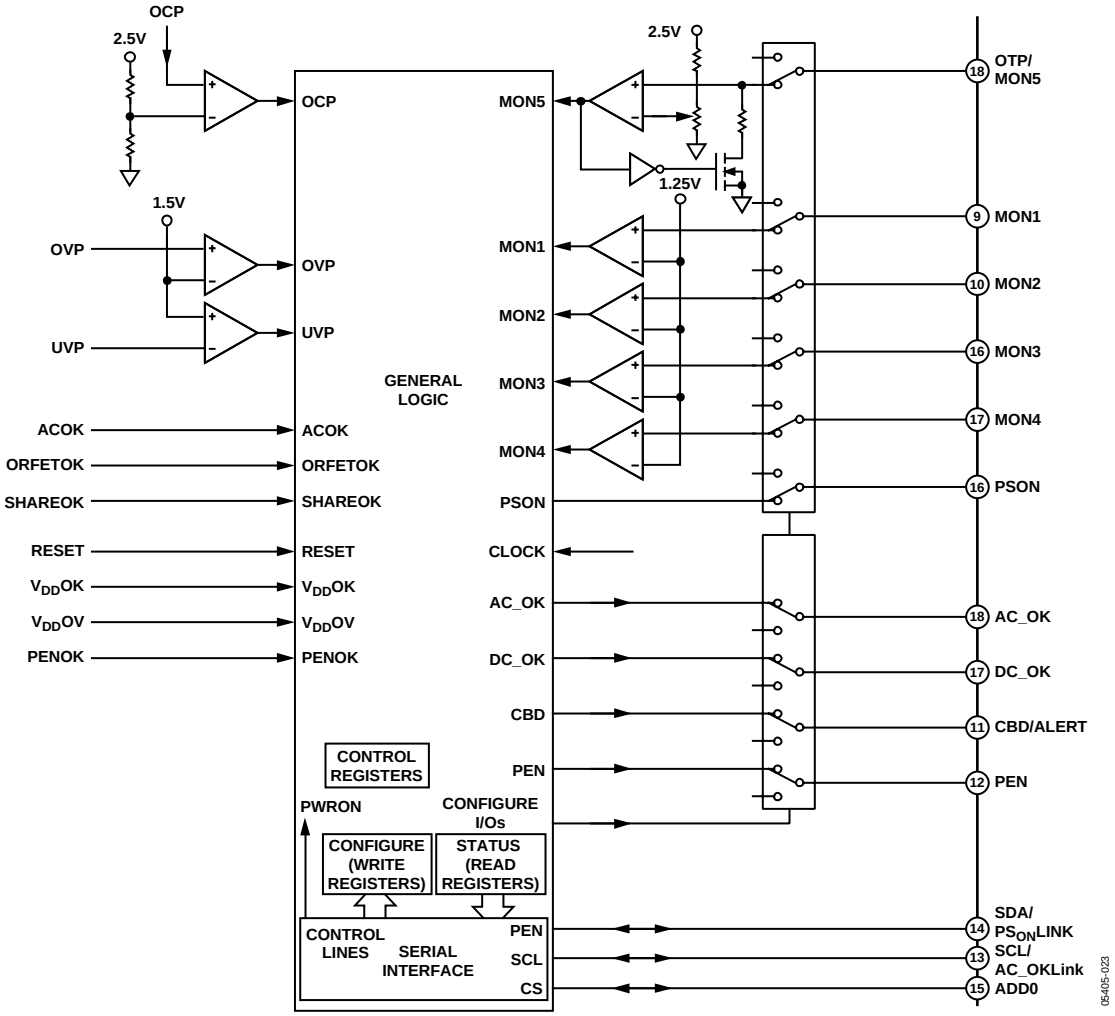

Figure 23. Block Diagram of Protection and General Logic

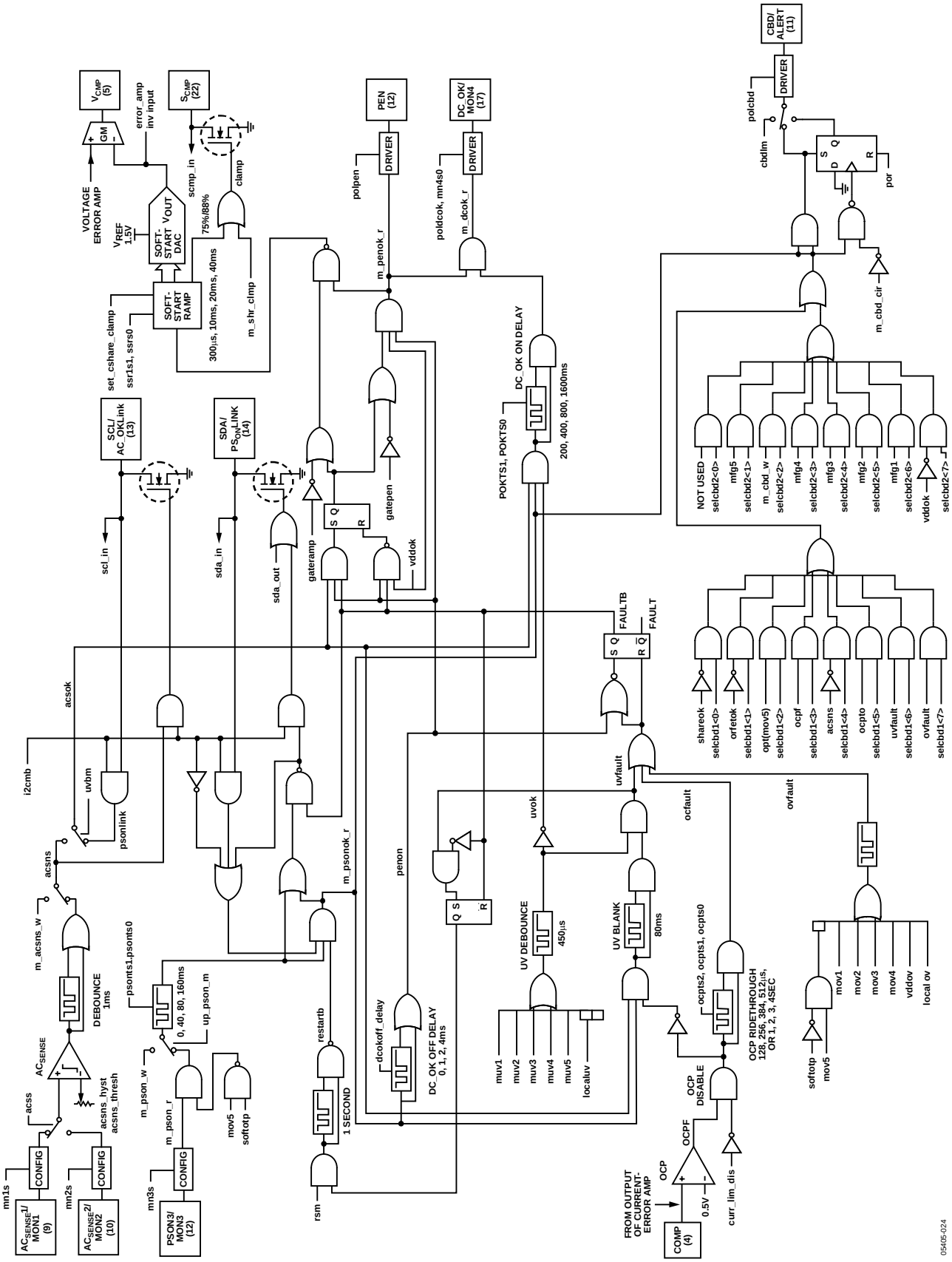

Figure 24. General Logic

SMBus SERIAL PORT

The programming and microprocessor interface for the ADM1041A is a standard SMBus serial port, which consists of a clock line and a data line. The more rigorous requirements of the SMBus standard are specified in order to give the greatest noise immunity. The ADM1041A operates in slave mode only. If a microprocessor is not used, these pins can be configured to perform the PS_{ON}LINK and AC_OKLink functions. Note that this port is not intended to be connected to the customer's SMBus (or I^2C bus). Continuous SMBus activity or an external bus fault interferes with the interpart communication, possibly preventing proper operation and proper fault reporting. If the customer needs status and control functions via the SMBus, it is recommended that a microprocessor with a hardware SMBus (I^2C) port be used for this interface. The microprocessor should access the ADM1041As via a second SMBus port, which may be emulated in software (subset of the full protocol).

MICROPROCESSOR SUPPORT

The ADM1041A has many features that allow it to operate with the aid of a microprocessor. There are several reasons why a microprocessor might be used:

- To provide unusual logic and/or timing requirements, particularly for fault conditions.
- To drive one or more LEDs, including flashing, according to the status of the power supply.
- To replace other discrete circuits such as multiple OTP, extra output monitoring, fan speed control, and failure detection, and combine the status of these circuits with the status of the ADM1041As.
- To free up some pins on the ADM1041As. This could reduce the BOM and therefore the cost.
- To interface to an external SMBus (or I^2C) for more detailed status reporting. The SMBus port in the ADM1041A is not intended for this purpose.
- To allow EEPROM space in ADM1041A(s) or in the microprocessor to be used for FRU (VPD) data. A simple or complex microprocessor can be used according to the amount of additional functionality required. Note that the microprocessor is not intended to access or modify the EEPROM address space that is used for the configuration of the ADM1041A(s).

Interfacing

The microprocessor must access the ADM1041A(s) via their on-board SMBus (I^2C) port. Because this port is also used to configure the ADM1041A(s), the software must include a routine that avoids SMBus activity during configuration. The simplest interface is for the microprocessor to have an SMBus (I^2C) port implemented in hardware, but this may be more expensive. An alternative is to emulate the bus in software and to use two general-purpose logic I/O pins. Only a simple subset of the SMBus protocol need be emulated because the ADM1041A always operates as a slave device.

Configuring for a Microprocessor

Except during initial configuration, all ADM1041A registers that need to be accessed are high speed CMOS devices that do not involve EEPROM. Table 43, the Microprocessor Support table describes the various registers, bits, and flags that can be read and written to.

Note that for the microprocessor to gain control of the PSON and AC_{SENSE} functions, Reg12h (Table 27) must be configured. A separate configuration bit is allocated to each signal. The microprocessor can then write to the signal as though the signal originated within the ADM1041A itself.

BROADCASTING

In a power supply with multiple outputs, it is recommended that all outputs rise together. Because the SMBus is relatively slow, writing sequentially to the PSON signal in each ADM1041A, for instance, causes a significant delay in the output rise of the last chip to be written. The ADM1041A avoids this problem by allocating a common broadcast address that all chips can respond to. To avoid data collisions, this feature should be used only for commands that do not initiate a reply.

SMBus SERIAL INTERFACE

Control of the ADM1041A is carried out via the SMBus. The ADM1041A is connected to this bus as a slave device under the control of a master device.

The ADM1041A has a 7-bit serial bus slave address. When the device is powered up, it does so with a default serial bus address. The default power-on SMBus address for the device is 1010XXX binary, the three lowest address bits (A2 to A0) being defined by the state of the address pin, ADD0, and Bit 1 of Configuration Register 4 (ADD1). Because ADD0 has three possible states (tied to V_{DD}, tied to GND, or floating) and Config4 < 1 > can be high or low, there are a total of six possible addresses, as shown in Table 6.

GENERAL SMBus TIMING

The SMBus specification defines specific conditions for different types of read and write operations. General SMBus read and write operations are shown in the timing diagrams of Figure 25, Figure 26, and Figure 27, and described in the following sections.

The general SMBus protocol operates as follows.

The master initiates data transfer by establishing a start condition, defined as a high-to-low transition on the serial data line, SDA, while the serial clock line, SCL, remains high. This indicates that a data stream follows. All slave peripherals connected to the serial bus respond to the start condition and shift in the next 8 bits, consisting of a 7-bit slave address (MSB first), plus an R/$\overline{W}$ bit, which determines the direction of the data transfer, that is, whether data is written to or read from the slave device (0 = write, 1 = read).

The peripheral whose address corresponds to the transmitted address responds by pulling the data line low during the low period before the ninth clock pulse, known as the Acknowledge bit, and holding it low during the high period of this clock pulse. All other devices on the bus remain idle while the selected device waits for data to be read from or written to it. If the R/$\overline{W}$ bit is a 0, then the master writes to the slave device. If the R/$\overline{W}$ bit is a 1, the master reads from the slave device.

Data is sent over the serial bus in sequences of nine clock pulses, eight bits of data, followed by an Acknowledge bit from the slave device. Data transitions on the data line must occur during the low period of the clock signal and remain stable during the high period, because a low-to-high transition when the clock is high may be interpreted as a stop signal.

If the operation is a write operation, the first data byte after the slave address is a command byte. This tells the slave device what to expect next. It may be an instruction, such as telling the slave device to expect a block write, or it may be a register address that tells the slave where subsequent data is to be written.

Because data can flow in only one direction as defined by the R/$\overline{W}$ bit, it is not possible to send a command to a slave device during a read operation. Before doing a read operation, it might first be necessary to perform a write operation to tell the slave what sort of read operation to expect and/or the address from which data is to be read.

When all data bytes have been read or written, stop conditions are established. In write mode, the master pulls the SDA line high during the tenth clock pulse to assert a stop condition. In read mode, the master device releases the SDA line during the low period before the ninth clock pulse, but the slave device does not pull it low. This is known as No Acknowledge. The master then takes the data line low during the low period before the tenth clock pulse, then high during the tenth clock pulse to assert a stop condition.

Note: If it is required to perform several read or write operations in succession, the master can send a repeat start condition instead of a stop condition to begin a new operation.

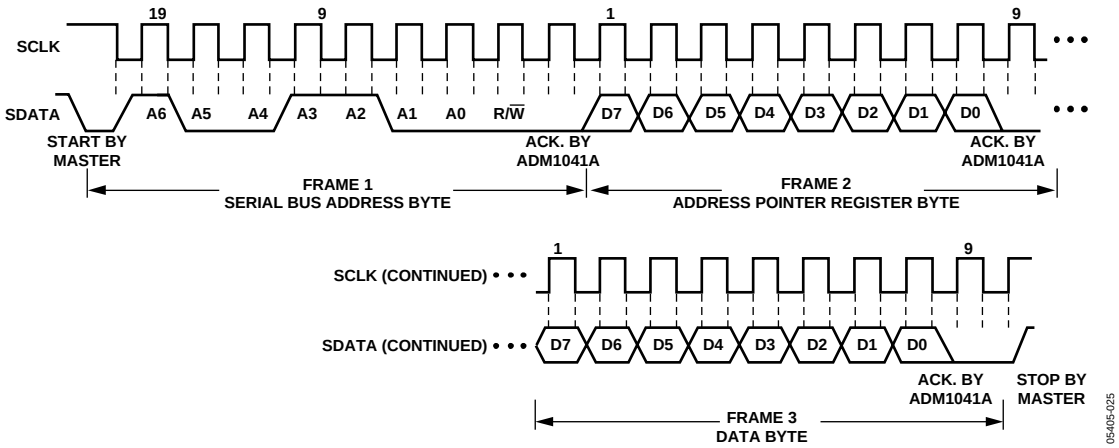

Figure 25. Writing a Register Address to the Address Pointer Register, then Writing Data to the Selected Register

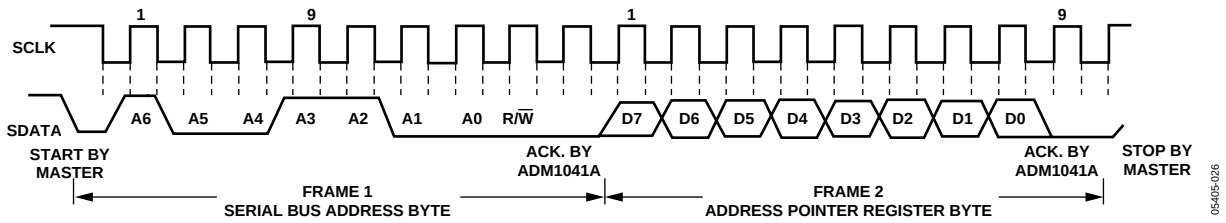

Figure 26. Writing to the Address Pointer Register Only

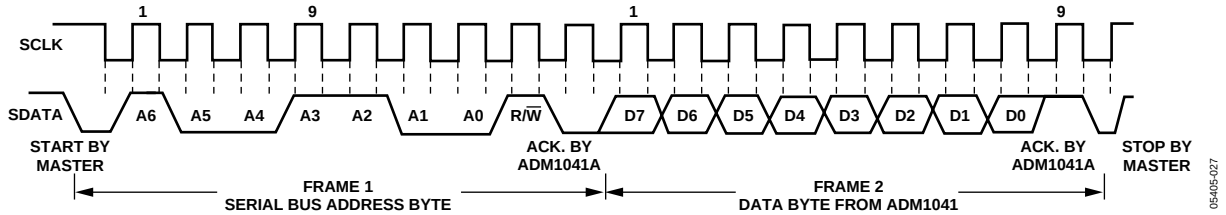

Figure 27. Reading Data from a Previously Selected Register

Table 6. Device SMBus Addresses

ADD1 Bit[1]	ADD0 Pin	A2	A1	A0	Target Device	ADDRESS	HEX READ	HEX WRITE
0	GND	0	0	0	0	1010 000X	A0	A1
0	V_{DD}	0	0	1	1	1010 001X	A2	A3
0	NC	1	0	0	4	1010 100X	A8	A9
1	GND	0	1	0	2	1010 010X	A4	A5
1	V_{DD}	0	1	1	3	1010 011X	A6	A7
1	NC	1	0	1	5	1010 101X	AA	AB
X	X	X	X	X	All Devices	1010 111X	AE	

[1] ADD1 is low by default. To access the additional three addresses it is necessary to set Config 4 < 1 > high and then perform a power cycle to allow the new address to be latched after the EEPROM download. Refer to the section on Extended SMBUS Addressing for more details.

SMBus PROTOCOLS FOR RAM AND EEPROM

The ADM1041A contains volatile registers (RAM) and nonvolatile EEPROM. RAM occupies the address locations from 00h to 7Fh, while EEPROM occupies the address locations from 8000h to 813Fh.

The SMBus specification defines several protocols for different types of read and write operations. The protocols used in the ADM1041A are described and illustrated in this section. The following abbreviations are used in the diagrams:

S Start
P Stop
R Read
W Write
A Acknowledge
$\overline{A}$ No Acknowledge

The ADM1041A uses the following SMBus write protocols.

SMBus Erase EEPROM Page Operations

EEPROM memory can be written to only if it is effectively unprogrammed. Before writing to one or more locations that are already programmed, the page containing those locations must be erased. EEPROM ERASE is performed by sending a page erase command byte (A2h) followed by the page location of the item to be erased. (There is no need to set an erase bit in an EEPROM control/status register.)

The EEPROM consists of 16 pages of 32 bytes each; the register default EEPROM consists of 1 page of 32 bytes starting at 8100h.

Table 7. EEPROM Page Layout

Page No.	EEPROM Location	Description
1	8000h to 801Fh	Available FRU
2	8020h to 803Fh	Available FRU
3	8040h to 805Fh	Available FRU
4	8060h to 807Fh	Available FRU
5	8080h to 809Fh	Available FRU
6	80A0h to 80BFh	Available FRU
7	80C0h to 80DFh	Available FRU
8	80E0h to 80FFh	Available FRU
9	8100h to 811Fh	Configuration Boot Registers
10	8120h to 813Fh	ADI Registers
11	8140h to 815Fh	Available FRU
12	8160h to 817Fh	Available FRU
13	8180h to 819Fh	Available FRU
14	81A0h to 81BFh	Available FRU
15	81C0h to 81DFh	Available FRU
16	81E0h to 81FFh	ADI Registers

The EEPROM page address consists of the EEPROM address high byte, 80h for FRU or 81h for register default, and the three MSBs of the low byte. The lower five bits of the EEPROM address of the low byte are ignored during an erase operation.

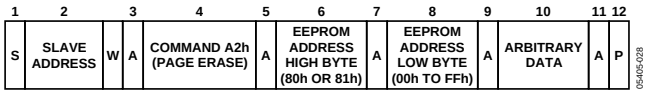

Figure 28. EEPROM Page Erase Operation

Page erasure takes approximately 20 ms. If the EEPROM is accessed before erasure is complete, the SMBus responds with No Acknowledge.

Figure 29 shows the peak IDD supply current during an EEPROM page erase operation. Decoupling capacitors of 10 µF and 100 nF are recommended on V_{DD}.

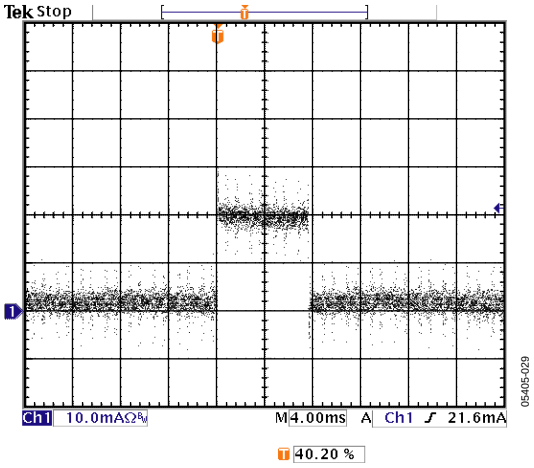

Figure 29. EEPROM Page Erase Peak I_{DD} Current

SMBus Write Operations

Send Byte

In this operation, the master device sends a single command byte to a slave device, as follows:

1. The master device asserts a start condition on SDA.
2. The master sends the 7-bit slave address followed by the write bit (low).
3. The addressed slave device asserts ACK on SDA.
4. The master sends a command code.
5. The slave asserts ACK on SDA.
6. The master asserts a stop condition on SDA and the transaction ends.

In the ADM1041A, the send byte protocol is used to write a register address to RAM for a subsequent single-byte read from the same address or block read or write starting at that address. This is illustrated in Figure 30.

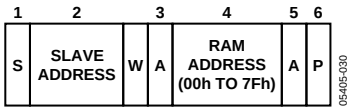

Figure 30. Setting a RAM Address for Subsequent Read

If it is required to read data from the RAM immediately after setting up the address, the master can assert a repeat start condition immediately after the final ACK and carry out a single-byte read, block read, or block write operation without asserting an intermediate stop condition.

Write Byte/Word

In this operation, the master device sends a command byte and one or two data bytes to the slave device, as follows:

1. The master device asserts a start condition on SDA.
2. The master sends the 7-bit slave address followed by the write bit (low).
3. The addressed slave device asserts ACK on SDA.
4. The master sends a command code.
5. The slave asserts ACK on SDA.
6. The master sends a data byte.
7. The slave asserts ACK on SDA.
8. The master sends a data byte (or asserts stop at this point).
9. The slave asserts ACK on SDA.
10. The master asserts a stop condition on SDA to end the transaction.

In the ADM1041A, the write byte/word protocol is used for the following three purposes. The ADM1041A knows how to respond by the value of the command byte.

- Write a single byte of data to RAM. Here, the command byte is the RAM address from 00h to 7Fh and the (only) data byte is the actual data, as shown in Figure 31.

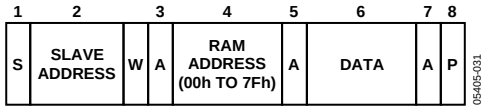

Figure 31. Single-Byte Write to RAM

- Set up a 2-byte EEPROM address for a subsequent read or block read. In this case, the command byte is the high byte of the EEPROM address (80h). The (only) data byte is the low byte of the EEPROM address, as shown in Figure 32.

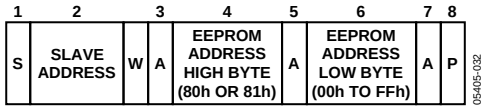

Figure 32. Setting an EEPROM Address

If it is required to read data from the EEPROM immediately after setting up the address, the master can assert a repeat start condition immediately after the final ACK and carry out a single-byte read or a block read without asserting an intermediate stop condition.

- Write a single byte of data to EEPROM. In this case, the command byte is the high byte of the EEPROM address, 80h or 81h. The first data byte is the low byte of the EEPROM address and the second data byte is the actual data. Bit 1 of EEPROM Register 3 must be set. This is illustrated in Figure 33.

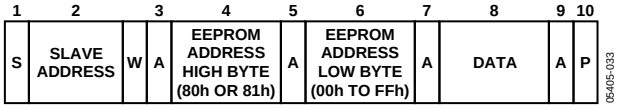

Figure 33. Single-Byte Write to EEPROM

If it is required to read data from the ADM1041A immediately after setting up the address, the master can assert a repeat start condition immediately after the final ACK and carry out a single-byte read, block read, or block write operation without asserting an intermediate stop condition.

Block Write

In this operation, the master device writes a block of data to a slave device. Programming an EEPROM byte takes approximately 350 µs, which limits the SMBus clock for repeated or block write operations. The start address for a block write must have been set previously. In the case of the ADM1041A, this is done by a send byte operation to set a RAM address or by a write byte/ word operation to set an EEPROM address.

1. The master device asserts a start condition on SDA.
2. The master sends the 7-bit slave address followed by the write bit (low).
3. The addressed slave device asserts ACK on SDA.
4. The master sends a command code that tells the slave device to expect a block write. The ADM1041A command code for a block read is A0h (10100000).
5. The slave asserts ACK on SDA.
6. The master sends a data byte that tells the slave device how many data bytes are to be sent. The SMBus specification allows a maximum of 32 data bytes to be sent in a block write.
7. The slave asserts ACK on SDA.
8. The master sends N data bytes.
9. The slave asserts ACK on SDA after each data byte.
10. The master asserts a stop condition on SDA to end the transaction.

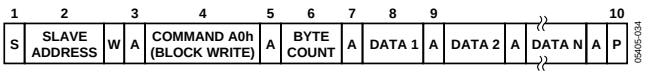

Figure 34. Block Write to EEPROM or RAM

When performing a block write to EEPROM, the page that contains the location to be written should not be write-protected (Register 03h) prior to sending the above SMBus packet. Block writes are limited to within a 32-byte page boundary and cannot cross into the next page.

SMBus READ OPERATIONS

The ADM1041A uses the following SMBus read protocols.

Receive Byte

In this operation, the master device receives a single byte from a slave device, as follows:

1. The master device asserts a start condition on SDA.
2. The master sends the 7-bit slave address followed by the read bit (high).
3. The addressed slave device asserts ACK on SDA.
4. The master receives a data byte.
5. The master asserts NO ACK on SDA.
6. The master asserts a stop condition on SDA and the transaction ends.

In the ADM1041A, the receive byte protocol is used to read a single byte of data from a RAM or EEPROM location whose address has been set previously by a send byte or write byte/word operation. This is illustrated in Figure 35.

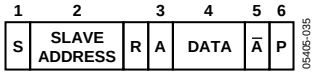

Figure 35. Single-Byte Read from EEPROM or RAM

Block Read

In this operation, the master device reads a block of data from a slave device. The start address for a block read must previously have been set. In the case of the ADM1041A, this is done by a send byte operation to set a RAM address or by a write byte/word operation to set an EEPROM address. The block read operation itself consists of a send byte operation that sends a block read command to the slave, immediately followed by a repeat start, and a read operation that reads out multiple data bytes, as follows:

1. The master device asserts a start condition on SDA.
2. The master sends the 7-bit slave address followed by the write bit (low).
3. The addressed slave device asserts ACK on SDA.
4. The master sends a command code that tells the slave device to expect a block read. The ADM1041A command code for a block read is A1h (10100001).
5. The slave asserts ACK on SDA.
6. The master asserts a repeat start condition on SDA.
7. The master sends the 7-bit slave address followed by the read bit (high).
8. The slave asserts ACK on SDA.
9. The master receives a byte count data byte that tells it how many data bytes are to be received. The SMBus specification allows a maximum of 32 data bytes to be received in a block read.
10. The master asserts ACK on SDA.
11. The master receives N data bytes.
12. The master asserts ACK on SDA after each data byte.
13. The slave does not acknowledge after the Nth data byte.
14. The master asserts a stop condition on SDA to end the transaction.

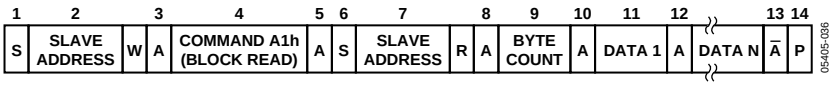

Figure 36. Block Read from EEPROM or RAM

Notes on SMBus Read Operations

The SMBus interface of the ADM1041A cannot load the SMBUS if no power is applied to the ADM1041A. This requirement allows a power supply to be disconnected from the ac supply while still installed in a power subsystem.

When using the SMBus interface, a write always consists of the ADM1041A SMBus interface address byte, followed by the internal address register byte, and then the data byte. There are two cases for a read.

In the first case, if the internal address register is known to be at the desired address, read the ADM1041A with the SMBus interface address byte, followed by the data byte read from the ADM1041A. The internal address pointer increments if a block mode operation is in progress; data values of 0 are returned if the register address limit of 7Fh is exceeded or if unused registers in the address range 00h to 7Fh are accessed. If the address register is pointing at EEPROM memory, that is 8000h, and the address reaches its limit of 80FFh, it does not roll over to Address 8100h on the next access.

Additional accesses do not increment the address pointer, all reads return 00h, and all writes complete normally but do not change any internal register or EEPROM location. If the address register is pointing at EEPROM memory, that is 81xxh, and the address reaches its limit of 813Fh, it does not roll over to Address 8140h on the next access.

Additional accesses do not increment the address pointer, all reads return 00h, and all writes complete normally but do not change any internal register or EEPROM location. Note that for byte reads, the internal address does not auto-increment.

In the second case, if the internal address register value is unknown, write to the ADM1041A with the SMBus interface address byte, followed by the internal address register byte. Then restart the serial communication with a read consisting of the SMBus interface address byte, followed by the data byte read from the ADM1041A.

SMBus ALERT RESPONSE ADDRESS (ARA)

The ADM1041A CBD/ALERT pin can be configured to respond to a variety of fault signals and can be used as an interrupt to a microprocessor. The pins from several ADM1041As may be wire-OR'ed. When the SMBus master (microprocessor) detects an alert request, it normally needs to read the alert status of each device to identify the source of the alert.

The SMBus ARA provides an easier method to locate the source of a such an alert. When the master receives an alert, it can send a general call address (0001100) over the bus. The device asserting the alert responds by returning its own slave address to the master.

If more than one device asserts an alert, all alerting devices try to respond with their slave addresses, but an arbitration process ensures that only the lowest slave address is received by the master. If the slave device has its alert configured as latching, it sends a command via the SMBus to clear the latch. The master should then check if the alert line is still asserted, and, if so, repeat the ARA call to service the next alert. Note that an alerting slave does not respond to an ARA call unless it is configured in SMBus mode (not AC_OKLink/PS_{ON}LINK) and up_pson_m is set. The ADM1041A supports the SMBus (ARA) function.

SUPPORT FOR SMBus 1.1

SMBus 1.1 optionally adds a CRC8 frame check sequence to check if transmissions are received correctly. This is particularly useful for long block read/write EEPROM operations, when the SMBus is heavily loaded or in a noisy environment. The CRC8 frame can be used to guarantee reliability of the EEPROM.

LAYOUT CONSIDERATIONS

Noise coupling into the digital lines (greater than 150 mV), overshoot greater than V_{CC}, and undershoot less than GND may prevent successful SMBus communication with the ADM1041A. SMBus No Acknowledge is the most common symptom, causing unnecessary traffic on the bus. Although the SMBus maximum frequency of communication is rather low (400 kHz max), care still needs to be taken to ensure proper termination within a system with multiple parts on the bus and long printed circuit board traces. A 5.1 kΩ resistor can be added in series with the SDA and SCL lines to help filter noise and ringing. Minimize noise coupling by keeping digital traces out of switching power supply areas and ensure that digital lines containing high speed data communications cross at right angles to the SDA and SCL lines.

POWER-UP AUTO-CONFIGURATION

After power-up or reset, the ADM1041A automatically reads the content of a 32-byte block of EEPROM memory that starts at 8100h and transfers the contents into the appropriate trim-level and control registers (00h to 1Bh). In this way, the ADM1041A can be preconfigured with the desired operating characteristics without the host system having to download the data over the SMBus. This does not preclude the possibility of modifying the configuration during normal operation.

Figure 37 shows a block diagram of the EEPROM download at power-up or power-on reset.

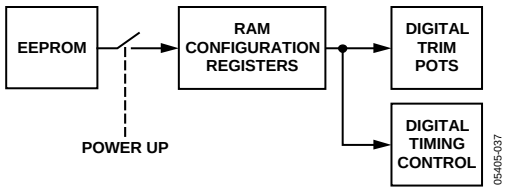

Figure 37. EEPROM Download

EXTENDED SMBus ADDRESSING

It is possible to use more than three ADM1041As in a single power supply. The first time the device is powered up, Bit 1 of Configuration Register 1 (ADD1) is 0. This means that only three device addresses are initially available as defined by ADD0; if there are more than three devices in a system, two or more of them have duplicate addresses. See Figure 38.

To overcome this, the ICT pin has additional functionality. Taking ICT below GND temporarily disables the SMBus function of the device. Thus, if the ICT pin of all devices in which ADD1 is to remain 0 are taken negative, the ADD1 bits of all other devices can be set to 1 via the SMBus. Each device then has a unique address. Internal diodes clamp the negative voltage to about 0.6 V, and care should be taken to limit the current to less than approximately 5 mA on each ICT input to prevent the possibility of damage or latch-up. The suggested current is 3 mA. One example of a suitable circuit is given in Figure 38. The ADM1041As can then be configured and trimmed. If required, AC_OKLink and PS_{ON}LINK must be configured last. If ICT is used for its intended purpose as a current transformer input, care must be taken with the circuit design to allow the extended SMBus addressing to work.

SDA/PS_{ON}LINK

The SDA pin normally carries data in and out of the ADM1041A during programming/configuration or while reading/writing by a microprocessor. If a microprocessor is not used, this pin can be configured as PS_{ON}LINK and can be connected to the same pin on other ADM1041As in the power supply. If a fault is detected in any ADM1041A, causing it to shut down, it uses this pin to signal the other ADM1041As to also shut down. If an auto-restart has been configured, it also causes all ADM1041As to turn on together.

SCL/AC_OKLink

The SCL pin normally provides a clock signal into the ADM1041A during programming/configuration or while reading/writing by a microprocessor. If a microprocessor is not used, this pin can be configured as AC_OKLink, and can be connected to the same pin on other ADM1041As in the power supply. This allows a single ADM1041A to be used for ac sensing and helps to synchronize the start-up of multiple ADM1041As.

BACKDOOR ACCESS

After SCL and SDA have been configured as AC_OKLink and PS_{ON}LINK, it may be desired to recover the SMBus access to the ADM1041A. Changes may be necessary to the internal configuration or trim bits. This is achieved by holding the SCL and SDA pins at 0 V (ground) while cycling V_{DD}. SCL and SDA then revert to SMBus operation. See Figure 38.

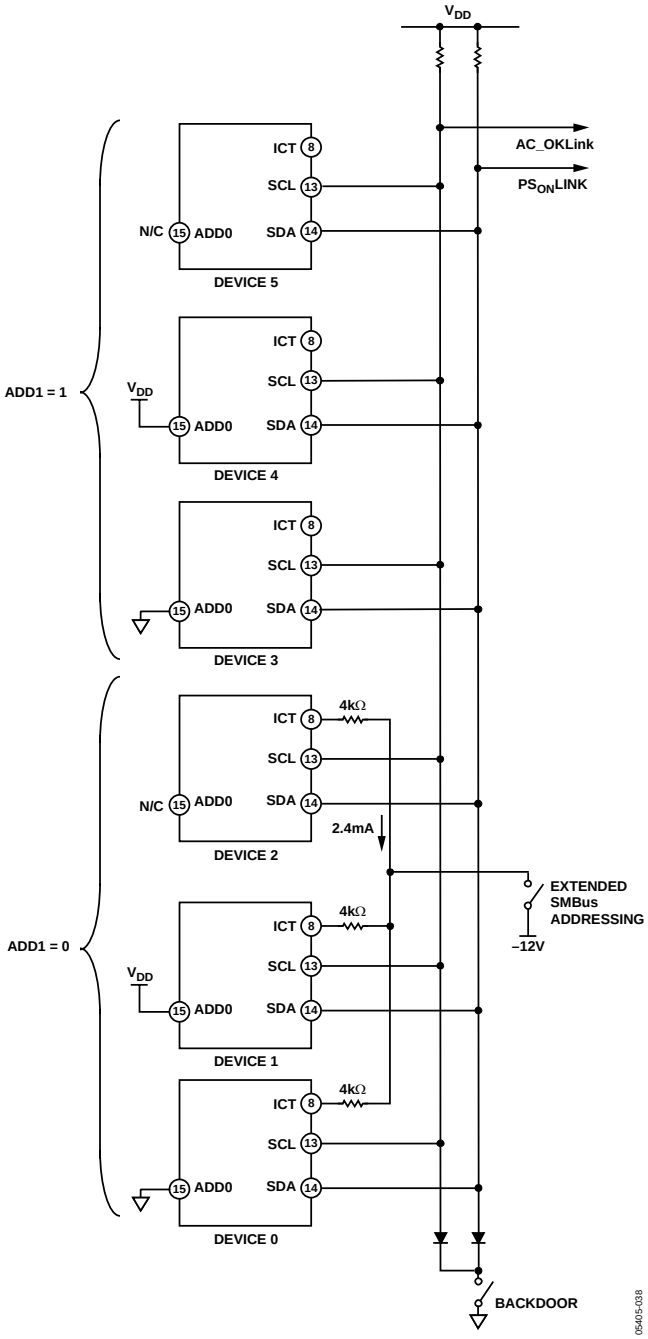

Figure 38. Extended SMBus Addressing and Backdoor Access

REGISTER LISTING

Table 8.

Register Address	Name	Power-On Value	Factory EEPROM Value
00h/2Ah	Status1/Status1 Mirror Latched	XXh—Depends on status of ADM1041A at power-up.	
01h/2Bh	Status2/Status2 Mirror Latched	XXh—Depends on status of ADM1041A at power-up.	
02h/2Ch	Status3/Status3 Mirror Latched	XXh—Depends on status of ADM1041A at power-up.	
03h	Calibration Bits	From EEPROM Register 8103h	00h
04h	Current Sense CC	From EEPROM Register 8104h	00h
05h	Current Share Offset	From EEPROM Register 8105h	00h
06h	Current Share Slope	From EEPROM Register 8106h	FEh
07h	EEPROM_lock	From EEPROM Register 8107h	20h
08h	Load OV Fine	From EEPROM Register 8108h	00h
09h	Local UVP Trim	From EEPROM Register 8109h	00h
0Ah	Local OVP Trim	From EEPROM Register 810Ah	00h
0Bh	OTP Trim	From EEPROM Register 810Bh	00h
0Ch	ACSNS Trim	From EEPROM Register 810Ch	00h
0Dh	Config1	From EEPROM Register 810Dh	00h
0Eh	Config2	From EEPROM Register 810Eh	00h
0Fh	Config3	From EEPROM Register 810Fh	00h
10h	Config4	From EEPROM Register 8110h	00h
11h	Config5	From EEPROM Register 8111h	00h
12h	Config6	From EEPROM Register 8112h	00h
13h	Config7	From EEPROM Register 8113h	00h
14h	Current Sense Divider Error Trim	From EEPROM Register 8114h	XXh – Factory Cal Value
15h	Current Sense Amplifer Offset Trim	From EEPROM Register 8115h	XXh – Factory Cal Value
16h	Current Sense Options 1	From EEPROM Register 8116h	XXh – Factory Cal Value
17h	Current Sense Options 2	From EEPROM Register 8117h	XXh – Factory Cal Value
18h	UV Clamp Trim	From EEPROM Register 8118h	00h
19h	Load VoltageTrim	From EEPROM Register 8119h	00h
1Ah	Sel CBD/SMBAlert1	From EEPROM Register 811Ah	00h
1Bh	Sel CBD/SMBAlert2	From EEPROM Register 811Bh	00h
1Ch	Manufacturer's ID	41h—Hardwired by manufacturer	
1Dh	Revision Register	Xh—Hardwired by Manufacturer	
20h–29h	Reserved for Manufacturer		
2Ah	Status1 Mirror Latched	XXh—Depends on status of ADM1041A at power-up.	
2Bh	Status2 Mirror Latched	XXh—Depends on status of ADM1041A at power-up.	
2Ch	Status3 Mirror Latched	XXh—Depends on status of ADM1041A at power-up.	
2Dh–2Eh	Reserved for Manufacturer		
8000h–81FFh	EEPROM		

DETAILED REGISTER DESCRIPTIONS

Table 9. Register 00h, Status1. Power-On Default XXh (refer to the logic schematic in Figure 24 and to Table 43.)

Bit No.	Name	R/W	Description
7	OV Fault	R	1= Overvoltage fault has occurred.
6	UV Fault	R	1= Undervoltage fault has occurred.
5	OCP Timeout	R	1= Overcurrent has occured and timed out (ocpf is in the Status3 Register).
4	Mon1 Flag	R	1= MON1 flag.
3	Mon2 Flag	R	1= MON2 flag.
2	Mon3 Flag	R	1= MON3 flag.
1	Mon4 Flag	R	1= MON4 flag.
0	Mon5 Flag	R	1= MON5 flag.

Table 10. Register 01h, Status2. Power-On Default XXh (refer to the logic schematic in Figure 24 and to Table 43.)

Bit No.	Name	R/W	Description
7	Share_OK	R	1= Current share is within limits.
6	OrFET_OK	R	1= OR'ing MOSFET is on.
5	REVERSE_OK	R	1= Reverse OK—reverse voltage across the ORing MOSFET is within limits.
4	V_{DD}_OK	R	1= V_{DD} is within limits.
3	GND_OK	R	1= Connection of GND pin is good.
2	Intref_OK	R	1= Internal voltage reference is within limits.
1	Extrefok_OK	R	1= External voltage reference is within limits.
0	V_{DD}OV	R	1= V_{DD} is above its OV threshold.

Table 11. Register 02h, Status3. Power-On Default XXh (refer to the logic schematic in Figure 24 and to Table 43.)

Bit No.	Name	R/W	Description
7	m_acsns_r	R	Reflects the status on $AC_{SENSE}1/AC_{SENSE}2$.
6	m_pson_r	R	Reflects the status of PSON.
5	m_penok_r	R	Reflects the status of PEN.
4	m_psonok_r	R	Status of PS_{ON}LINK.
3	m_DC_OK_r	R	Status of DC_OK.
2	ocpf	R	1= An overcurrent has occured, direct from comparator.
1	PULSE_OK	R	1= Pulses are present at the PULSE pin.
0	fault	R	1= Fault latch.

Table 12. Register 03h, Calibration Bits. Power-On Default from EEPROM Register 8103h During Power-Up

Bit No.	Name	R/W	Description
7–6	Reverse Voltage Off Threshold	R/$\overline{W}$	Reverse Voltage Detector Turn-Off Threshold: **b7 b6 Function** 0 0 100 mV 0 1 150 mV 1 0 200 mV 1 1 250 mV
5–4	Reverse Voltage On Threshold	R/$\overline{W}$	Reverse Voltage Detector Turn On Threshold: **b5 b4 Function** 0 0 20 mV 0 1 30 mV 1 0 40 mV 1 1 50 mV
3	PEN_GATE	R/$\overline{W}$	Gate pen option. When set, PEN is gated by AC_OK.
2	Gate Ramp	R/$\overline{W}$	Gate ramp option. When set, soft start is gated by AC_OK.

Bit No.	Name	R/W	Description		
1–0	Load OV Recover	R/$\overline{W}$	**b1**	**b0**	**Function**
			0	0	Add 100 µs delay
			0	1	Add 200 µs delay
			1	0	Add 300 µs delay
			1	1	Add 400 µs delay

Table 13. Register 04h, Current-Sense CC. Power-On Default from EEPROM Register 8104h During Power-Up

Bit No.	Name	R/W	Description		
7–3	Current-Limit Trim	R/$\overline{W}$	This register contains the current-sense trim level setting at which current limiting starts. Five bits. Setting all bits to 1 results in maximum current limit (130%).		
2	Reserved	R/$\overline{W}$	Don't Care. This should be set to "0" for normal operation.		
1–0	Share OK Threshold	R/$\overline{W}$	**b1**	**b0**	**Function**
			0	0	±100 mV
			0	1	±200 mV
			1	0	±300 mV
			1	1	±400 mV

Table 14. Register 05h, Current Share Offset. Power-On Default from EEPROM Register 8105h During Power-Up

Bit No.	Name	R/W	Description
7–0	Current Share Offset	R/$\overline{W}$	This register contains the current-share offset trim level. Writing 00h corresponds to the minimum offset. FFh corresponds to maximum offset. See the Current Limit Error Amplifier section in the Table 1 for more information.

Table 15. Register 06h, Current Share Slope. Power-On Default from EEPROM Register 8106h During Power-Up

Bit No.	Name	R/W	Description
7–1	Current Share Slope	R/$\overline{W}$	This register contains current share slope trim level. Increasing this results in a steeper slope for the current share. This register is normally written to during the user calibration. It is used with Reg15h for trimming the current share.
0	Reserved	R/$\overline{W}$	Don't Care.

Table 16. Register 07h, EEPROM_lock. Power-On Default from EEPROM Register 8107h During Power-Up

Bit No.	Name	R/W	Description	
7	Reserved	R/$\overline{W}$	Don't Care	
6	Lock6	R/$\overline{W}$	Locks 8140h–817Fh	Available FRU.
5	Lock5	R/$\overline{W}$	Locks 8120h–813Fh	ADI cal registers, locked by manufacturer.
4	Lock4	R/$\overline{W}$	Locks 8100h–811Fh	ADM1041A configuration boot registers.
3	Lock3	R/$\overline{W}$	Locks 80C0h–80FFh	Available FRU.
2	Lock2	R/$\overline{W}$	Locks 8080h–80BFh	Available FRU.
1	Lock1	R/$\overline{W}$	Locks 8040h–807Fh	Available FRU.
0	Lock0	R/$\overline{W}$	Locks 8000h–803Fh	Available FRU.

Table 17. Register 08h, Load OV Fine. Power-On Default from EEPROM Register 8108h During Power-Up

Bit No.	Name	R/W	Description
7–0	Load OV Trim	R/$\overline{W}$	Load OV Trim. This range is programmable from 105% to 120% of the nominal load voltage. 00h corresponds to 105%. Each LSB results in an increase of 1.6 mV.

Table 18. Register 09h, Local UVP Trim. Power-On Default from EEPROM Register 8109h During Power-Up

Bit No.	Name	R/W	Description
7–0	local_uvp	R/$\overline{W}$	This register contains the local undervoltage settings. This can be programmed from 1.3 V to 2.1 V when the nominal voltage is 2 V. Each LSB increases the UV clamp setting by 3.1 mV. See the Local Overvoltage specifications in Table 1.

Table 19. Register 0Ah, Local OVP Trim. Power-On Default from EEPROM Register 810Ah During Power-Up

Bit No.	Name	R/W	Description
7–0	Local OVP	R/$\overline{W}$	Local OVP Trim. This range is programmable so that the Local OVP flag can be set when 1.9 V to 2.85 V appears at the VLS pin when the nominal voltage is 2 V. Each LSB corresponds typically to an increase of 3.7 mV. See the Local Overvoltage specifications in Table 1.

Table 20. Register 0Bh, OTP Trim. Power-On Default from EEPROM Register 810Bh During Power-Up

Bit No.	Name	R/W	Description
7–4	OTP Trim	R/$\overline{W}$	OTP Threshold Trim. Each LSB corresponds typically to an increase of 27 mV. See the OTP specifications in Table 1.
3–1	Reserved	R/$\overline{W}$	Don't Care
0	Soft OTP	R/$\overline{W}$	Configure Soft OTP Option 0 = mon5 +ve ov = ov 1 = mon5 +ve ov = softotp

Table 21. Register 0Ch, AC_{SENSE} Trim. Power-On Default from EEPROM Register 810Ch During Power-Up

Bit No.	Name	R/W	Description
7–3	AC SENSE Threshold	R/$\overline{W}$	AC_{SENSE} Threshold Trim Settings. Each LSB corresponds to 14 mV increase in the AC SENSE threshold. The range is 1.10 V to 1.45 V.
2–0	AC SENSE Hysteresis	R/$\overline{W}$	AC_{SENSE} Hysteresis Trim Settings. Each LSB corresponds to 50 mV increase in the AC SENSE hysteresis. The range is 200 V to 550 mV.

Table 22. Register 0Dh, Config1. Power-On Default from EEPROM Register 810Dh During Power-Up

Bit No.	Name	R/W	Description
7	PS ON	R/$\overline{W}$	0 = Internal PSON. 1 = Support via SMBus. Selects PSON from config6 < 1 > = m_pson_w.
6	Reserved	R/$\overline{W}$	Don't Care.
5	Reserved	R/$\overline{W}$	Don't Care.
4	Undervoltage Blanking	R/$\overline{W}$	Undervoltage Blanking Mode. 1: Blanking-hold period starts from recovery of AC_OK. 0: Blanking-hold period starts following SCL = 0, while i2c_mb = 1.
3–1	Mon 1 / ACSENSE 1	R/$\overline{W}$	

b3	b2	b1	option		Mon1 Flag	ov	uv
0	0	0	iopin = ACSNS1		(true = high)		
0	0	1	iopin = ACSNS1		(true = high)		
0	1	0	+ve ov	iopin < 1.15 V	0	0	0
				iopin > 1.25 V	1	1	0
0	1	1	+ve uv	iopin < 1.25 V	0	0	1
				iopin > 1.35 V	1	0	0
1	0	0	–ve ov	iopin < 1.25 V	0	1	0
				iopin > 1.35 V	1	0	0
1	0	1	–ve uv	iopin < 1.15 V	0	0	0
				iopin > 1.25 V	1	0	1
1	1	0	flag	iopin < 1.15 V	0	0	0
				iopin > 1.25 V	1	0	0
1	1	1	flag	iopin < 1.15 V	1	0	0
				iopin > 1.25 V	0	0	0

0	i2c_mb	R/$\overline{W}$	0 = Pins are configured as SDA/SCL (default). 1 = SCL pin is configured as AC_OKLink output. SDA pin is configured as PS_{ON}LINK output.

Table 23. Register 0Eh, Config2. Power-On Default from EEPROM Register 810Eh During Power-Up

Bit No.	Name	R/W	Description							
7–5	MON 2 / ACSENSE2	R/$\overline{W}$	**b7**	**b6**	**b5**	**option**		**Mon2 Flag**	**Ov**	**uv**
			0	0	0	iopin = $AC_{SENSE}2$		(true = high)		
			0	0	1	iopin = $AC_{SENSE}2$		(true = high)		
			0	1	0	+ve ov	iopin < 1.15 V	0	0	0
							iopin > 1.25 V	1	1	0
			0	1	1	+ve uv	iopin < 1.25 V	0	0	1
							iopin > 1.35 V	1	0	0
			1	0	0	–ve ov	iopin < 1.25 V	0	1	0
							iopin > 1.35 V	1	0	0
			1	0	1	–ve uv	iopin < 1.15 V	0	0	0
							iopin > 1.25 V	1	0	1
			1	1	0	flag	iopin < 1.15 V	0	0	0
							iopin > 1.25 V	1	0	0
			1	1	1	flag	iopin > 1.25 V	1	0	0
							iopin > 1.25 V	0	0	0
4–2	MON 3 / PS ON	R/$\overline{W}$	**b4**	**b3**	**b2**	**option**		**Mon3 Flag**	**ov**	**uv**
			0	0	0	iopin = PSON		(true = low)		
			0	0	1	iopin = PSON		(true = high)		
			0	1	0	+ve ov	iopin < 1.15 V	0	0	0
							iopin > 1.25 V	1	1	0
			0	1	1	+ve uv	iopin < 1.25 V	0	0	1
							iopin > 1.35 V	1	0	0
			1	0	0	–ve ov	iopin < 1.25 V	0	1	0
							iopin > 1.35 V	1	0	0
			1	0	1	–ve uv	iopin < 1.15 V	0	0	0
							iopin > 1.25 V	1	0	1
			1	1	0	flag	iopin < 1.15 V	0	0	0
							iopin > 1.25 V	1	0	0
			1	1	1	flag	iopin < 1.15 V	1	0	0
							iopin > 1.25 V	0	0	0
1–0	DC OK On Delay	R/$\overline{W}$	DC_OKon_delay							
			b1	**b0**		**option**				
			0	0		400 ms				
			0	1		200 ms				
			1	0		800 ms				
			1	1		1600 ms				

Table 24. Register 0Fh, Config3. Power-On Default from EEPROM Register 810Fh During Power-Up

Bit No.	Name	R/W	Description							
7–5	MON 4 / DC OK	R/$\overline{W}$	**b7**	**b6**	**b5**	**option**		**Mon4 Flag**	**ov**	**uv**
			0	0	0	iopin = DC_OK				
			0	0	1	iopin = DC_OK				
			0	1	0	+ve ov	iopin < 1.15 V	0	0	0
							iopin > 1.25 V	1	1	0
			0	1	1	+ve uv	iopin < 1.25 V	0	0	1
							iopin > 1.35 V	1	0	0
			1	0	0	−ve ov	iopin < 1.25 V	0	1	0
							iopin > 1.35 V	1	0	0
			1	0	1	−ve uv	iopin < 1.15 V	0	0	0
							iopin > 1.25 V	1	0	1
			1	1	0	flag	iopin < 1.15 V	0	0	0
							iopin > 1.25 V	1	0	0
			1	1	1	flag	iopin < 1.15 V	0	0	0
							iopin > 1.25 V	0	0	0
4–2	MON 5 / AC OK	R/$\overline{W}$	**b4**	**b3**	**b2**	**option**		**Mon5 Flag**	**ov**	**uv**
			0	0	0	iopin = AC_OK				
			0	0	1	iopin = AC_OK				
			0	1	0	+ve ov	iopin < vdac	0	0	0
							iopin > vdac	1	1	0
			0	1	1	+ve uv	iopin < vdac	0	0	1
							iopin > vdac	1	0	0
			1	0	0	−ve ov	iopin < vdac	0	1	0
							iopin > vdac	1	0	0
			1	0	1	−ve uv	iopin < vdac	0	0	0
							iopin > vdac	1	0	1
			1	1	0	flag	iopin < vdac	0	0	0
							iopin > vdac	1	0	0
			1	1	1	Reserved				
1–0	PS_ON TIME	R/$\overline{W}$	PS_ON debounce time:							
			b1	**b0**		**option**				
			0	0		80 ms				
			1	0		0 ms (no debounce)				
			1	0		40 ms				
			1	1		160 ms				

Table 25. Register 10h, Config4. Power-On Default from EEPROM Register 8110h During Power-Up

Bit No.	Name	R/W	Description		
7–6	DC_OK Off Delay	R/$\overline{W}$	DC_OK off delay (power-off warn delay)		
			b7	**b6**	**option**
			0	0	2 ms
			0	1	0 ms
			1	0	1 ms
			1	1	4 ms
5–4	Current SHARE Capture	R/$\overline{W}$	**b5**	**b4**	**option**
			0	0	1%
			0	1	2%
			1	0	3%
			1	1	4%

Bit No.	Name	R/W	Description
3–2	Soft Start	R/$\overline{W}$	Soft-Start Step **b3** **b2** **Rise Time** 0 0 300 µs 0 1 10 ms 1 0 20 ms 1 1 40 ms
1	Address	R/$\overline{W}$	EEPROM programmable second address bit.
0	Trim Lock	R/$\overline{W}$	When this bit is set, the trim registers including this register are not writable via SMBus. To make registers writable again, the trim-lock bit in the EEPROM must first be erased and the value downloaded using either power-up or test download.

Table 26. Register 11h, Config5. Power-On Default from EEPROM Register 8111h During Power-Up

Bit No.	Name	R/W	Description
7	Current Limit Disable	R/$\overline{W}$	Mask effect of OCP to general logic (status flag still gets asserted) when curr_lim_dis = 1.
6	PEN Polarity	R/$\overline{W}$	Sets polarity of PEN output.
5	CBD Polarity	R/$\overline{W}$	Sets polarity of CBD output.
4–3	Reserved	R/$\overline{W}$	Don't Care.
2	OCP Ridethrough	R/$\overline{W}$	Set this bit to 1 when OCP ridethrough is required. A small delay still exists. Refer to Reg 12h.
1	GND_OK Disable	R/$\overline{W}$	Disable GROUND_OK input to power management debounce logic.
0	CBD Latch Mode	R/$\overline{W}$	Select CBD latch mode. 0 = nonlatching; 1 = latching.

Table 27. Register 12h, Config6. Power-On Default from EEPROM Register 8112h During Power-Up

Bit No.	Name	R/W	Description
7	Restart Mode	R/$\overline{W}$	Restart mode (rsm). When rsm = 1, the circuit attempts to restart the supply after an undervoltage or overcurrent at about 1-second intervals. Latch mode. When rsm = 0, UV and OC faults latch the output off. Cycling PSON or removing the supply to the IC is then required to reset the latch and permit a restart.
6	Micro AC OK	R/$\overline{W}$	Configure microprocessor to control/gate signal from AC_IN_OK to AC_S_OK. See Table 43. 0 = Standalone. 1 = Microprocessor support mode.
5	Micro AC SENSE	R/$\overline{W}$	Microproccessor control of AC_{SENSE}. See Table 43.
4–3	OCP Ridethrough	R/$\overline{W}$	OCP ridethrough (Reg 11h[2] = 0) **b4** **b3** **Period** 0 0 1 second 0 1 2 seconds 1 0 3 seconds 1 1 4 seconds OCP ridethrough (Reg11h[2] = 1) **b4** **b3** **Period** 0 0 128 µs 0 1 256 µs 1 0 384 µs 1 1 512 µs
2	AC Sense Mode	R/$\overline{W}$	AC_{SENSE} mode. 0 means AC_OK is derived from $AC_{SENSE}1$, whereas 1 means AC_OK is derived from $AC_{SENSE}2$.
1	Micro PS_ON	R/$\overline{W}$	Microprocessor control of pson. See Table 43.
0	Current Share Clamp	R/$\overline{W}$	0 = 75%. Set current share clamp release threshold. 1 = 88%.

Table 28. Register 13h, Config7. Power-On Default from EEPROM Register 8113h During Power-Up

Bit No.	Name	R/W	Description
7	PEN Polarity	R/$\overline{W}$	Sets polarity of PEN output.
6	CBD Polarity	R/$\overline{W}$	Sets polarity of CBD output.
5	DC_OK Polarity	R/$\overline{W}$	Sets polarity of DC_OK output.
4	AC_OK Polarity	R/$\overline{W}$	Sets polarity of AC_OK output.

Bit No.	Name	R/W	Description
3	FG Polarity	R/$\overline{W}$	Sets polarity of OrFET gate control (F_G pin): 0 = inverted (low = on); 1 = normal (low = off).
2	Micro Share Clamp	R/W	Allow the microprocessor to directly control the share clamp. 0 = normal share clamp operation, that is, not clamped; 1 = assert share clamp, that is, clamped. See Table 43.
1	Micro CBD Write	R/$\overline{W}$	Allow the microprocessor to write directly to CBD as a possible way of adding an additional port. This might be a blinking LED or a fail signal to the system. See Table 43.
0	Micro CBD Clear	R/$\overline{W}$	Microprocessor clear of CBD latch (if configured as latching) folowing an SMBAlert. See Table 43.

Table 29. Register 14h, Current-Sense Divider Error Trim 1. Power-On Default from EEPROM Register 8114h During Power-Up

Bit No.	Name	R/W	Description
7–0	Current Sense Offset Trim	R/$\overline{W}$	Trim-out offset due to external resistor divider tolerances (for common-mode correction). This register is normally written to during the user calibration.

Table 30. Register 15h, Current Sense Amp Offset Trim 2. Power-On Default from EEPROM Register 8115h During Power-Up

Bit No.	Name	R/W	Description
7–0	Current Sense DC offset Trim	R/$\overline{W}$	Trim-out current sense amplifier offset (dc offset correction). Increasing this results in more offset for the current sense. This register is normally written to during the user calibration. It is used with Reg06H.

Table 31. Register 16h, Current-Sense Options 1. Power-On Default from EEPROM Register 8116h During Power-Up

Bit No.	Name	R/W	Description				
7–6	Reserved	R/$\overline{W}$	Don't Care				
5–3	Divider Trim	R/$\overline{W}$	External Divider Tolerance Trim Range (Common-Mode Trim Range).				
			b5	**b4**	**b3**	**Range**	**External Resistor Tolerance**
			0	0	0	−5 mV	−0.25%
			0	0	1	−10 mV	−0.50%
			0	1	0	−20 mV	−1.00%
			1	0	0	+5 mV	+0.25%
			1	0	1	+10 mV	+0.50%
			1	1	0	+20 mV	+1.00%
2–0	Current-Sense Gain	R/$\overline{W}$	Gain Selector				
			b2	**b1**	**b0**	**Gain**	**Range**
			0	0	0	65x	34.0 mV to 44.5 mV
			0	0	1	85x	26.0 mV to 34.0 mV
			0	1	0	110x	20.0 mV to 26.0 mV
			1	0	0	135x	16.0 mV to 20.0 mV
			1	0	1	175x	12.0 mV to 16.0 mV
			1	1	0	230x	9.5 mV to 12.0 mV

Table 32. Register 17h, Current-Sense Option 2. Power-On Default from EEPROM Register 8117h During Power-Up

Bit No.	Name	R/W	Description
7	Current Sense Mode	R/$\overline{W}$	0 = Current sense with external resistor. 1 = Current transformer.
6	Chopper Enable	R/$\overline{W}$	When chopper = 1, current-sense amplifier is configured as a chopper amplifier. Otherwise, current-sense amplifier is continuous time amplifier.
5	CT Range	R/$\overline{W}$	**Gain** — **Range** 0 = 4.5 — 0.45 V–0.68 V 1 = 2.57 — 0.79 V–1.20 V
4	Ground Offset	R/$\overline{W}$	0: ground offset = 100 mV; I_{SHARE} error amp, offset = 50 mV. 1: ground offset = 0; I_{SHARE} error amp offset = 0.
3	Reserved	R/$\overline{W}$	Don't Care.
2–0	Diff Sense Trim	R/$\overline{W}$	Internal Sense Amp Offset Trim Range for Differential Current Sense **b2 b1 b0 Range Gain** 0 0 0 −8 mV −1 0 0 1 −15 mV −2 0 1 0 −30 mV −4 1 0 0 +8 mV +1 1 0 1 +15 mV +2 1 1 0 +30 mV +4

Table 33. Register 18h, UV Clamp Trim. Power-On Default from EEPROM Register 8118h During Power-Up

Bit No.	Name	R/W	Description
7–0	False UV Clamp	R/$\overline{W}$	This register contains the false UV clamp settings. This can be programmed from 1.3 V to 2.1 V when the nominal voltage is 2 V. Each LSB increases the UV Clamp setting by 3.1 mV.

Table 34. Register 19h, Load Voltage Trim. Power-On Default from EEPROM Register 8119h During Power-Up

Bit No.	Name	R/W	Description
7–0	Load Voltage Trim	R/$\overline{W}$	This register contains the load voltage trim settings and is normally written to during the user to set the output voltage.

Table 35. Register 1Ah, Sel CBD/SMBAlert1. Power-On Default From EEPROM Register 811Ah During Power-Up

Bit No.	Name	R/W	Description
			This register allows the user to set the CBD/Alert pin when certain flag conditions occur. These bits are set up in an OR function so that any one flag can set the CBD/Alert pin. This register is used with Register 1Bh.
7	selcbd1 <7>	R/$\overline{W}$	Overvoltage Fault
6	selcbd1 <6>	R/$\overline{W}$	uvfault
5	selcbd1 <5>	R/$\overline{W}$	OCP Timeout (ridethrough timed out, ocpf flag)
4	selcbd1 <4>	R/$\overline{W}$	acsnsb (inverted)
3	selcbd1 <3>	R/$\overline{W}$	ocpf
2	selcbd1 <2>	R/$\overline{W}$	otp (MON5 OV)
1	selcbd1 <1>	R/$\overline{W}$	orfetokb (inverted)
0	Selcbd1 <0>	R/$\overline{W}$	Share_OKb (inverted)

Table 36. Register 1Bh, Sel CBD/SMBAlert2. Power-On Default from EEPROM Register 811Bh During Power-Up

Bit No.	Name	R/W	Description
			This register allows the user to set the CBD/Alert pin when certain flag conditions occur. These bits are set up in an OR function so that any one flag can set the CBD/Alert pin. This register is used with Register 1Ah.
7	selcbd2 <7>	R/$\overline{W}$	V_{DD}OK b (inverted)
6	selcbd2 <6>	R/$\overline{W}$	MON 1 flag
5	selcbd2 <5>	R/$\overline{W}$	MON 2 flag
4	selcbd2 <4>	R/$\overline{W}$	MON 3 flag
3	selcbd2 <3>	R/$\overline{W}$	MON 4 flag
2	selcbd2 <2>	R/$\overline{W}$	Micro CBD write. Microprocessor control of CBD
1	selcbd2 <1>	R/$\overline{W}$	Mon5 flag
0	selcbd2 <0>	R/$\overline{W}$	Not used.

Table 37. Register 1Ch, Manufacturer's ID. Power-On Default 41h.

Bit No.	Name	R/W	Description
7–0	Manufacturer's ID Code	R	This register contains the manufacturer's ID code for the device. It is used by the manufacturer for test purposes and should not be read from or written to in normal operation.

Table 38. Register 1Dh, Revision Register. Power-On Default 01h.

Bit No.	Name	R/W	Description
7–4	Major Revision Code	R	These 4 bits denote the generation of the device.
3–0	Minor Revision Code	R	These 4 bits contain the manufacturer's code for minor revisions to the device: Rev 0 = 0h, Rev 1 = 1h, and so on. This register is used by the manufacturer for test purposes. It should not be read from or written to in normal operation.

Table 39. Register 2Ah, Status1 Mirror Latched. Power-On Default 00h.

These flags are cleared by a register read, provided the fault no longer persists. See also Table 43. Note that latched bits are clocked on a low-to-high transmission only. Also note that these register bits are cleared when read via the SMBus, except if the fault is still present. It is recommended to read the register again after the faults disappear to ensure reset.

Bit No.	Name	R/W	Description
7	OV Fault Latch	R	Overvoltage fault has occurred.
6	UV Fault Latch	R	Undervoltage fault has occurred.
5	OCP Timeout Latch	R	Overcurrent has occured and timed out (ocpf is in Status3 register).
4	Mon1 Flag Latch	R	MON1 flag.
3	Mon2 Flag Latch	R	MON2 flag.
2	Mon3 Flag Latch	R	MON3 flag.
1	Mon4 Flag Latch	R	MON4 flag.
0	Mon5 Flag Latch	R	MON5 flag.

Table 40. Register 2Bh, Status2 Mirror Latched. Power-On Default 00h.

These flags are cleared by a register read, provided the fault no longer persists. See also Table 43. Note that latched bits are clocked on a low-to-high transmission only. Also note that these register bits are cleared when read via the SMBus, except if the fault is still present. It is recommended to read the register again after faults disappear to ensure reset.

Bit No.	Name	R/W	Description
7	Share_OK Latch	R	Share_OK fault
6	OrFET OK Latch	R	ORFET fault
5	Reverse OK Latch	R	Reverse_OK fault
4	V_{DD}OK Latch	R	V_{DD} OK fault
3	GND OK Latch	R	GND_OK fault
2	intrefok Latch	R	Internal reference fault
1	extrefok Latch	R	External reference fault
0	V_{DD}OV Latch	R	V_{DD} OK fault

Table 41. Register 2Ch, Status3 Mirror Latched. Power-On Default 00h

These flags are cleared by a register read, provided the fault no longer persists. See also Table 43. Note that latched bits are clocked on a low-to-high transmission only. Also note that these register bits are cleared when read via the SMBus, except if the fault is still present. It is recommended to read the register again after the faults disappear to ensure reset.

Bit No.	Name	R/W	Description
7	m_acsns_r Latch	R	AC_OK fault
6	m_pson_r Latch	R	PSON fault
5	m_penok_r Latch	R	PEN fault
4	m_psonok_r Latch	R	PS_{ON}LINK fault
3	m_DC_OK_r Latch	R	DC_OK fault
2	OCP Latch	R	OCP fault
1	PULSE_OK Latch	R	Pulse fault
0	Fault	R	Fault latch

MANUFACTURING DATA

Table 42.

Register	Description
Register 81F0h	PROBE1_BIN
Register 81F1h	PROBE2_BIN
Register 81F2h	F T _ B I N
Register 81F3h	PROBE1_CHKSUM
Register 81F4h	PROBE2_CHKSUM
Register 81F5h	FT_CHKSUM
Register 81F6h	QUAL_PART_ID
Register 81F7h	Probe 1 cell current data (integer)
Register 81F8h	Probe 1 cell current data (two decimal places)
Register 81F9h	Probe 2 cell current data (integer)
Register 81FAh	Probe 2 cell current data (two decimal places)
Register 81FBh	Final test cell current data (integer)
Register 81FCh	Final test cell current data (two decimal places)
Register 81FDh	Probe X coordinate
Register 81FEh	Probe Y coordinate
Register 81FFh	Wafer number

MICROPROCESSOR SUPPORT

Possible ways to turn the ADM1041A on or off in response to a system request or a fault include the following:

- Daisy-chaining other ADM1041A PSON pins to the PEN pin, which is controlled by PSON on one ADM1041A.
- Use a microprocessor to control the PSON, the system interface, and any shutdowns due to faults.
- Connect all AC_OKLink pins together and connect all PS_{ON}LINK pins together. These pins must be configured appropriately.

Flags appended with _L are latched (Registers 2Ah/2Bh/2Ch). The latch is reset when the flag is read, except when the fault is still present. It is advisable to continue reading the flag(s) until the fault(s) have cleared.

Table 43.

Mnemonic	Description	Register	Bit	Read/Write
m_pson_r	Allows the microprocessor to read the state of PSON. This allows only one ADM1041A to be configured as the PSON interface to the host system.	02h	6	Read-only
Micro PS_ON	Allows the microprocessor to write to control the PSON function of each ADM1041A. When in microprocessor support mode, the principle configuration for controlling power-on/power-off is as follows. One ADM1041A is configured as the interface to the host system through the standard PSON pin. This pin is configured not to write through to the PSON debounce block. The microprocessor polls the status of this ADM1041A by reading m_pson_r. Debouncing is done by the microprocessor. If m_pson_r changed state, the microprocessor writes the new state to m_pson_w in all ADM1041As on the SMBus. If a fault occurs on any output, the SMBAlert interrupt requests microprocessor attention. If this means turning all ADM1041As off, this is done by writing a zero to the m_pson_w bit.	12h	1	Read/Write
m_acsns_r	Allows the microprocessor to read the state of $AC_{SENSE}1/AC_{SENSE}2$. This allows one ADM1041A to be configured as the interface to the host power supply.	02h	7	Read-only
Micro AC SENSE	Allows the microprocessor to write to control the AC_{SENSE} function of each ADM1041A. When in microprocessor support mode the principle configuration for controlling AC_OK, undervoltage blanking, PEN gating, and RAMP/SS gating is as follows. One ADM1041A is configured to be the interface with the host power supply AC monitoring circuitry. This ADM1041A can be configured so that the acsns signal is written through or would not be written through. Regardless, the microprocessor monitors m_acsns_r and write to m_acsns_w as appropriate. Because it is possible to sense but not to write through, it is possible to configure a second ADM1041A to monitor a second ac or bulk voltage.	12h	5	Read/Write
Micro Share Clamp	Allows the µP to write directly to m_shr_clmp to control when the ISHARE clamp is released. During a hot-swap insertion, there may be a need to delay the release of the ISHARE clamp. This allows the designer an option over the default release at 75% or 88% of the reference ramp (soft start).	13h	2	Read/Write
Micro CBD Write	Allows the microprocessor to write directly to CBD as a possible way of adding an additional output port. This might be for blinking LEDs or as a fault signal to the system.	13h	1	Read/Write
Micro CBD Clear	Allows the microprocessor to clear the CBD latch following an SMBalert. If CBD is configured to be latching, there may be circumstances that lead to CBD/SMBAlert being set by, for example, one of the MON flags, but does not lead to PSON being cycled and CBD being reset. In this case, the microprocessor needs to write directly to CBD to reset the latch.	13h	0	Read/Write
Mon5 Flag	This flag indicates the status of the MON5 pin.	00h	0	Read-only
Mon4 Flag	This flag indicates the status of the MON4 pin.	00h	1	Read-only
Mon3 Flag	This flag indicates the status of the MON3 pin.	00h	2	Read-only
Mon2 Flag	This flag indicates the status of the MON2 pin.	00h	3	Read-only
Mon1 Flag	This flag indicates the status of the MON1 pin.	00h	4	Read-only
OCP Timeout	If this flag is high, an overcurrent has occurred and timed out.	00h	5	Read-only
UV Fault	If this flag is high, an undervoltage has been sensed	00h	6	Read-only
OV Fault	If this flag is high, an overvoltage has been sensed.	00h	7	Read-only

Mnemonic	Description	Register	Bit	Read/Write
V_{DD}OV	If this flag is high, a V_{DD} overvoltage has been sensed.	01h	0	Read only
Extrefok_OK	If this flag is low, the externally available reference on Pin 18 is overloaded.	01h	1	Read-only
Intrefok_OK	If this flag is low, the internal reference has no integrity.	01h	2	Read-only
GND_OK	If this flag is low, ground (Pin 7) is open (either pin to PCB or pin to bond wires).	01h	3	Read-only
V_{DD}_OK	If this flag is low, V_{DD} is below its UVL or the power mangement block has a problem, a reference voltage, a ground fault, or a V_{DD} overvoltage fault.	01h	4	Read-only
REVERSE_OK	If this flag is low, the OrFET has an excessive reverse voltage.	01h	5	Read-only
OrFET_OK	If this flag is low, either PULSE_OK, penok, loadvok, or reverseok is false.	01h	6	Read-only
Share_OK	If this flag is low, the current-share accuracy is out of limits.	01h	7	Read-only
Fault	Fault latch. If this flag is high, either an ovfault, uvfault, or ocp has occured.	02h	0	Read-only
PULSE_OK	Pulses are present at AC_{SENSE} 1.	02h	1	Read-only
ocpf	If this flag is high, an overcurrent has been sensed and the ocp timer has started.	02h	2	Read-only
m_DC_OK_r	This flag indicates the status of the DC_OK pin.	02h	3	Read-only
m_psonok_r	This flag indicates the status of the PS_{ON}LINK pin.	02h	4	Read-only
m_penok_r	This flag indicates the status of the PEN pin.	02h	5	Read-only
m_pson_r	This flag indicates the status of the PSON pin.	02h	6	Read-only
m_acsns_r	This flag indicates the status of the AC_{SENSE}1/AC_{SENSE}2 pin.	02h	7	Read-only
Mon5 Flag Latch	Latched status of MON5 flag.	2Ah	0	Read-only
Mon4 Flag Latch	Latched status of MON4 flag.	2Ah	1	Read-only
Mon3 Flag Latch	Latched status of MON3 flag.	2Ah	2	Read-only
Mon2 Flag Latch	Latched status of MON2 flag.	2Ah	3	Read-only
Mon1 Flag Latch	Latched status of MON1 flag.	2Ah	4	Read-only
OCP Timeout Latch	Latched OCP timeout.	2Ah	5	Read-only
UV Fault Latch	Latched uvfault.	2Ah	6	Read-only
OV Fault Latch	Latched ovfault.	2Ah	7	Read-only
V_{DD}OV Latch	Latched vddov fault.	2Bh	0	Read-only
extrefok Latch	Latched extref fault.	2Bh	1	Read-only
intrefok Latch	Latched intref fault.	2Bh	2	Read-only
GND OK Latch	Latched gnd fault.	2Bh	3	Read-only
V_{DD}OK Latch	Latched V_{DD} fault.	2Bh	4	Read-only
Reverse OK Latch	Latched reverse voltage fault.	2Bh	5	Read-only
OrFET OK Latch	Latched orfet fault.	2Bh	6	Read-only
Share_OK Latch	Latched share fault.	2Bh	7	Read-only
Fault	Latched fault.	2Ch	0	Read-only
PULSE_OK Latch	Latched pulse fault.	2Ch	1	Read-only
OCP Latch	Latched ocpf fault.	2Ch	2	Read-only
m_DC_OK_r Latch	Latched DC_OK fault.	2Ch	3	Read-only
m_psonok_r Latch	Latched PS_{ON}LINKfault.	2Ch	4	Read-only
m_penok_r Latch	Latched PEN fault.	2Ch	5	Read-only
m_pson_r Latch	Latched PSON fault.	2Ch	6	Read-only
m_acsns_r Latch	Latched AC_{SENSE} fault.	2Ch	7	Read-only

TEST NAME TABLE

This table is an ADI internal reference. It is a cross reference for the ADI test program.

Table 44.

Specification	Test Name
Supplies	
V_{DD}	V_{DD}
I_{DD}, Current Consumption	I_{DD}
Peak I_{DD}, during EEPROM Erase Cycle	
UNDERVOLTAGE LOCKOUT, V_{DD}	
Start-Up Threshold	$V_{DD\ (ON)}$
Stop Threshold	$V_{DD\ (OFF)}$
Hysteresis	V_{DDHYS}
POWER BLOCK PROTECTION	
V_{DD} Overvoltage	V_{OVP}
V_{DD} Overvoltage Debounce	$T_{DFILTER}$
Open Ground	V_{GND}
Debounce	$T_{DEBOUNCE}$
POWER-ON RESET	
DC Level	V_{POR}
DIFFERENTIAL LOAD VOLTAGE SENSE I	
V_S– Input Voltage	V_{DVCM}
V_S+ Input Voltage	V_{DVIN_MAX}
V_S– Input Resistance	V_{DVINRN}
V_S+ Input Resistance	V_{DVINRP}
V_{NOM} Adjustment Range	V_{DVADJ}
Set Load Voltage Trim Step	V_{DVTRIM}
Minimum Set Load Overvoltage Trim Range	V_{DVLOV}
Set Load Overvoltage Trim Step	$V_{LOVTRIM}$
Recover Load OV False to F_G True	T_{LOADOV_FALSE}
Time from Load OV to F_G False	T_{LOADOV_TRUE}
LOCAL VOLTAGE SENSE, V_{LS}, AND FALSE UNDERVOLTAGE CLAMP	
Input Voltage Range	V_{LS_RANGE}
Stage Gain	A_{CLAMP}
False UV Clamp, V_{LS} Input Voltage Nominal, and Trim Range	$V_{CLMPTRIM}$
Clamp Trim Step	$V_{CLMPSTEP}$
LOCAL OVERVOLTAGE	V_{LSOV}
Nominal and Trim Range	
OV Trim Step	$V_{LSOVSTEP}$
OV Trim Step	$V_{LSOVSTEP}$
Noise Filter, for OVP Function Only	T_{NFOVP}
LOCAL UNDERVOLTAGE	V_{LSUV}
UV Trim Step	$V_{LSUVSTEP}$
UV Trim Step	$V_{LSUVSTEP}$
Noise Filter, for UVP Function Only	T_{NFUVP}
VOLTAGE ERROR AMPLIFIER	V_{CMP}
Reference Voltage	V_{REF_VCMP}
Temperature Coefficient	TC_V
Long-Term Voltage Stability	V_{STAB}
Soft-Start Period Range	$T_{SSRANGE}$

Specification	Test Name
VOLTAGE ERROR AMPLIFIER (CONT.)	
Set Soft-Start Period	T_{SS}
Unity Gain Bandwidth	GBW
Transconductance	G_{mVCMP}
Source Current	I_{SOURCE_VCMP}
Sink Current	I_{SINK_VCMP}
DIFFERENTIAL CURRENT-SENSE INPUT, C_s – C_s+	
Common-Mode Range,	V_{CM_RANGE}
External Divider Tolerance Trim Range (with respect to input)	$V_{OS_DIV_RANGE}$
External Divider Tolerance Trim Step	$V_{OS_DIV_STEP}$
DC Offset Trim Range (os_dc_range)	$V_{OS_DC_RANGE}$
DC Offset Trim Step Size	$V_{OS_DC_STEP}$
Total Offset Temperature Drift	T_{DRIFT}
Gain Range (Isense_range)	Isense_range
Gain Setting 1 (16h, B2–0 = 000)	G_{65X}
Gain Setting 2 (16h, B2–0 = 001)	G_{85X}
Gain Setting 3 (16h, B2–0 = 010)	G_{110X}
Gain Setting 4 (16h, B2–0 = 100)	G_{135X}
Gain Setting 5 (16h, B2–0 = 101)	G_{175X}
Gain Setting 6 (16h, B2–0 = 110)	G_{230X}
CURRENT-SENSE CALIBRATION	
Full Scale (No Offset)	V_{SHR}
Current Share Trim Step (At SHRO),	$V_{SHRSTEP}$
Cal. Accuracy, 20 mV at C_S+, C_S–	Tol_{CSHR}
Cal. Accuracy, 40 mV at C_S+, C_S–	Tol_{CSHR}
Cal. Accuracy, 40 mV at C_S+, C_S–	Tol_{CSHR}
SHARE BUS OFFSET	
Current Share Offset Range	V_{ZO}
Zero Current Offset Trim Step	V_{ZOSTEP}
CURRENT TRANSFORMER SENSE INPUT	I_{CT}
Gain Setting 0	G_{CT_X4}
Gain Setting 1	G_{CT_X2}
CT Input Sensitivity (Gain Set 0)	V_{CT_X4}
CT Input Sensitivity (Gain Set 1)	V_{CT_X2}
Input Impedance	R_{IN_CT}
Source Current	I_{SOURCE_CT}
Source Current Step Size	I_{STEP_CT}
Reverse Current for Extended SMBus	I_{REV}
CURRENT-LIMIT ERROR AMPLIFIER	
Current Limit Trim Range	C_{LIM}
Current Limit Trim Step	$C_{LIMSTEP}$
Current Limit Trim Step	$C_{LIMSTEP}$
Transconductance	G_{mCCMP}
Output Source Current	I_{SOURCE_CCMP}
Output Sink Current	I_{SINK_CCMP}

Specification	Test Name
CURRENT-SHARE DRIVER	
Output Voltage	V_{SHRO_1K}
Short-Circuit Source Current	I_{SHRO_SHORT}
Source Current	I_{SHRO_SOURCE}
Sink Current	I_{SHRO_SINK}
I SHARE DIFFERENTIAL SENSE	
Input Impedance	$R_{IN_SHR_DIFF}$
Gain	G_{SHR_DIFF}
CURRENT-SHARE ERROR AMPLIFIER	
Transconductance, SHRS to SCM	G_{mSCMP}
Output Source Current	I_{SOURCE_SCMP}
Output Sink Current	I_{SINK_SCMP}
Input Offset Voltage	$V_{IN_SHR_OFF}$
Share OK Window Comp Threshold	V_{SHR_THRES}
CURRENT LIMIT	
Lower Threshold	$V_{CLIM_THRES_MIN}$
Upper Threshold	$V_{CLIM_THRES_MAX}$
CURRENT-SHARE CAPTURE	
Current Share Capture Range	SHR_{CAPT_RANGE}
Capture Threshold	$V_{SHR_CAPT_THRES}$
FET OR GATE DRIVE	
Output Low Level (On)	V_{LO_FET}
Output Leakage Current	I_{OL_FET}
REVERSE VOLTAGE COMPARATOR	
Input Impedance	R_{FS}, R_{FD}
Reverse Turn-Off Threshold	$V_{RVD_THRES_OFF}$
Reverse Turn-On Threshold	$V_{RVD_THRES_ON}$
$AC_{SENSE}1/AC_{SENSE}2$ COMPARATOR	
Threshold Voltage	V_{SNSADJ_THRES}
Threshold Adjust Range	V_{SNSADJ_RANGE}
Threshold Trim Step	V_{SNSADJ_STEP}
Hysteresis Voltage	V_{SNSHST}
Hysteresis Adjust Range	V_{SNSHYS_RANGE}
Hysteresis Trim Step	V_{SNSHYS_STEP}
Noise Filter	T_{NFSNS}
PULSE-IN	
Threshold Voltage	$V_{PULSEMIN}$
Pulseok on delay	$T_{PULSEON}$
Pulseok off delay	$T_{PULSEOFF}$
OCP	
OCP Threshold Voltage	V_{OCP_THRES}
OCP Shutdown Delay Time	T_{OCP_SLOW}
OCP Fast Shutdown Delay Time	T_{OCP_FAST}

Specification	Test Name
MON1, MON2, MON3, MON4	
Sense Voltage	V_{MON1}
Hysteresis	V_{MON1_HST}
OVP Noise Filter	T_{NFOVP_MON1}
UVP Noise Filter	T_{NFUVP_MON1}
OTP (MON5)	
Sense Voltage Range	V_{OTP_RANGE}
OTP Trim Step	V_{OTP_STEP}
Hysteresis	I_{OTP_HST}
OVP Noise Filter	T_{NFOVP_OTP}
UVP Noise Filter	T_{NFUVP_OTP}
PSON	
Input Low Level	V_{IL_PSON}
Input High Level	V_{IH_PSON}
Debounce	T_{NF_PSON}
PEN, DC_OK, CBD, AC_OK	
Open-Drain N-Channel Option	
Output Low Level = On	V_{OL_PEN}
Open-Drain P-Channel Option?	
Output High Level = On	V_{OH_PEN}
Leakage Current	I_{OH_PEN}
DC_OK, Off Delay	T_{DCOK_OFF}
SMBus, SDL/SCL	
Input Voltage Low	V_{IL}
Input Voltage High	V_{IH}
Output Voltage Low	V_{OL}
Pull-Up Current	I_{PULLUP}
Leakage Current	I_{LEAK}
SERIAL BUS TIMING	
Clock Frequency	f_{SCLK}
Glitch Immunity	t_{SW}
Bus Free Time	t_{BUF}
Start Setup Time	$t_{SU;STA}$
Start Hold Time	$t_{HD;STA}$
SCL Low Time	t_{LOW}
SCL Low Time	t_{LOW}
SCL High Time	t_{HIGH}
SCL, SDA Rise Time	t_r
SCL, SDA Fall Time	t_f
Data Setup Time	$t_{SU;DAT}$
Data Hold Time	$t_{HD;DAT}$

OUTLINE DIMENSIONS

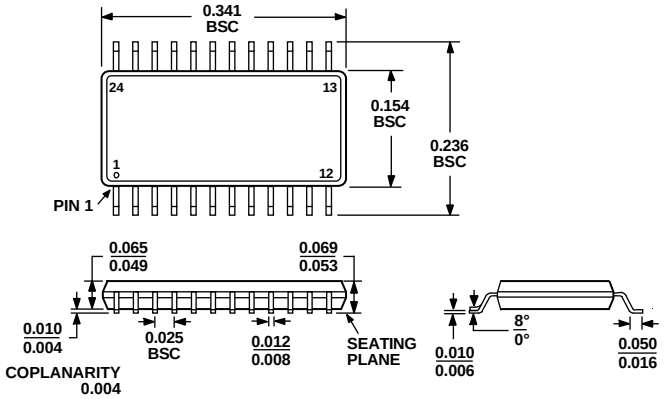

COMPLIANT TO JEDEC STANDARDS MO-137AE

Figure 39. 24-Lead Shrink Small Outline Package [QSOP]
(RQ-24)
Dimensions shown in inches

ORDERING GUIDE

Model	Temperature Range	Package Description	Package Option
ADM1041AARQZ[1]	−40°C to +85°C	24-Lead QSOP	RQ-24
ADM1041AARQZ-REEL[1]	−40°C to +85°C	24-Lead QSOP	RQ-24
ADM1041AARQZ-REEL7[1]	−40°C to +85°C	24-Lead QSOP	RQ-24

[1] Z = Pb-free part

NOTES

NOTES

NOTES

Purchase of licensed I²C components of Analog Devices or one of its sublicensed Associated Companies conveys a license for the purchaser under the Philips I²C Patent Rights to use these components in an I²C system, provided that the system conforms to the I²C Standard Specification as defined by Philips.

© 2005 Analog Devices, Inc. All rights reserved. Trademarks and registered trademarks are the property of their respective owners.
D05405–0–7/05(0)

www.analog.com

Компания «ЭлектроПласт» предлагает заключение долгосрочных отношений при поставках импортных электронных компонентов на взаимовыгодных условиях!

Наши преимущества:

- Оперативные поставки широкого спектра электронных компонентов отечественного и импортного производства напрямую от производителей и с крупнейших мировых складов;
- Поставка более 17-ти миллионов наименований электронных компонентов;
- Поставка сложных, дефицитных, либо снятых с производства позиций;
- Оперативные сроки поставки под заказ (от 5 рабочих дней);
- Экспресс доставка в любую точку России;
- Техническая поддержка проекта, помощь в подборе аналогов, поставка прототипов;
- Система менеджмента качества сертифицирована по Международному стандарту ISO 9001;
- Лицензия ФСБ на осуществление работ с использованием сведений, составляющих государственную тайну;
- Поставка специализированных компонентов (Xilinx, Altera, Analog Devices, Intersil, Interpoint, Microsemi, Aeroflex, Peregrine, Syfer, Eurofarad, Texas Instrument, Miteq, Cobham, E2V, MA-COM, Hittite, Mini-Circuits,General Dynamics и др.);

Помимо этого, одним из направлений компании «ЭлектроПласт» является направление «Источники питания». Мы предлагаем Вам помощь Конструкторского отдела:

- Подбор оптимального решения, техническое обоснование при выборе компонента;
- Подбор аналогов;
- Консультации по применению компонента;
- Поставка образцов и прототипов;
- Техническая поддержка проекта;
- Защита от снятия компонента с производства.

Как с нами связаться

Телефон: 8 (812) 309 58 32 (многоканальный)
Факс: 8 (812) 320-02-42
Электронная почта: org@eplast1.ru
Адрес: 198099, г. Санкт-Петербург, ул. Калинина, дом 2, корпус 4, литера А.