# QUADRUPLE DIFFERENTIAL LINE DRIVER

**Check for Samples: AM26C31**

## FEATURES

- **Meets or Exceeds the Requirements of TIA/EIA-422-B and ITU Recommendation V.11**
- **Low Power, $I_{CC}$ = 100 μA Typ**
- **Operates From a Single 5-V Supply**
- **High Speed, $t_{PLH} = t_{PHL}$ = 7 ns Typ**
- **Low Pulse Distortion, $t_{sk(p)}$ = 0.5 ns Typ**
- **High Output Impedance in Power-Off Conditions**
- **Improved Replacement for AM26LS31**
- **Available in Q-Temp Automotive**
  - **High-Reliability Automotive Applications**
  - **Configuration Control/Print Support**
  - **Qualification to Automotive Standards**

**AM26C31M. . .J OR W PACKAGE**
**AM26C31Q. . .D PACKAGE**
**AM26C31C. . .D, DB, OR NS PACKAGE**
**AM26C31I. . .D, DB, N, NS, OR PW PACKAGE**
**(TOP VIEW)**

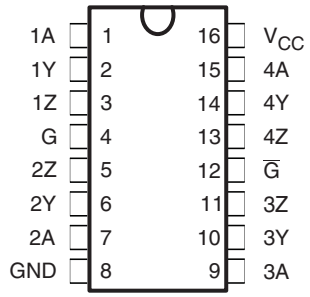


**AM26C31M. . .FK PACKAGE**
**(TOP VIEW)**

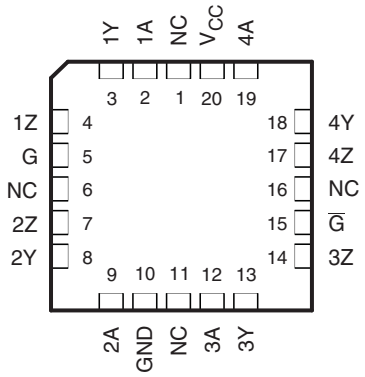


NC – No internal connection

## DESCRIPTION/ORDERING INFORMATION

The AM26C31 is a differential line driver with complementary outputs, designed to meet the requirements of TIA/EIA-422-B and ITU (formerly CCITT). The 3-state outputs have high-current capability for driving balanced lines, such as twisted-pair or parallel-wire transmission lines, and they provide the high-impedance state in the power-off condition. The enable functions are common to all four drivers and offer the choice of an active-high (G) or active-low ($\overline{G}$) enable input. BiCMOS circuitry reduces power consumption without sacrificing speed.

The AM26C31C is characterized for operation from 0°C to 70°C, the AM26C31I is characterized for operation from –40°C to 85°C, the AM26C31Q is characterized for operation over the automotive temperature range of –40°C to 125°C, and the AM26C31M is characterized for operation over the full military temperature range of –55°C to 125°C.

Please be aware that an important notice concerning availability, standard warranty, and use in critical applications of Texas Instruments semiconductor products and disclaimers thereto appears at the end of this data sheet.

PRODUCTION DATA information is current as of publication date. Products conform to specifications per the terms of the Texas Instruments standard warranty. Production processing does not necessarily include testing of all parameters.

Copyright © 1990–2011, Texas Instruments Incorporated

## ORDERING INFORMATION

| $T_A$ | PACKAGE(1) (2) | | ORDERABLE PART NUMBER | TOP-SIDE MARKING |
|---|---|---|---|---|
| 0°C to 70°C | PDIP (N) | Tube of 25 | AM26C31CN | AM26C31CN |
| | SOIC (D) | Tube of 40 | AM26C31CD | AM26C31C |
| | | Reel of 2500 | AM26C31CDR | |
| | SOP (NS) | Reel of 2000 | AM26C31CNSR | 26C31 |
| | SSOP (DB) | Reel of 2000 | AM26C31CDBR | 26C31 |
| –40°C to 85°C | PDIP (N) | Tube of 25 | AM26C31IN | AM26C31IN |
| | SOIC (D) | Tube of 40 | AM26C31ID | AM26C31I |
| | | Reel of 2500 | AM26C31IDR | |
| | SOP (NS) | Reel of 2000 | AM26C31INSR | 26C31I |
| | SSOP (DB) | Reel of 2000 | AM26C31IDBR | 26C31I |
| | TSSOP (PW) | Tube of 90 | AM26C31IPW | 26C31I |
| –40°C to 125°C | SOIC (D) | Tube of 40 | AM26C31QD | AM26C31QD |
| | | Reel of 2500 | AM26C31QDR | |
| –55°C to 125°C | CDIP (J) | Tube of 25 | AM26C31MJ | AM26C31MJ |
| | CFP (W) | Tube of 150 | AM26C31MW | AM26C31MW |
| | LCCC (FK) | Tube of 55 | AM26C31MFK | AM26C31MFK |

(1) Package drawings, thermal data, and symbolization are available at www.ti.com/packaging.
(2) For the most current package and ordering information, see the Package Option Addendum at the end of this document, or see the TI website at www.ti.com.

### Table 1. FUNCTION TABLE (Each Driver)(1)

| INPUT A | ENABLES | | OUTPUTS | |
|---|---|---|---|---|
| | G | $\overline{G}$ | Y | Z |
| H | H | X | H | L |
| L | H | X | L | H |
| H | X | L | H | L |
| L | X | L | L | H |
| X | L | H | Z | Z |

(1) H = High level, L = Low level, X = Irrelevant, Z = High impedance (off)


Copyright © 1990–2011, Texas Instruments Incorporated

## LOGIC DIAGRAM (POSITIVE LOGIC)

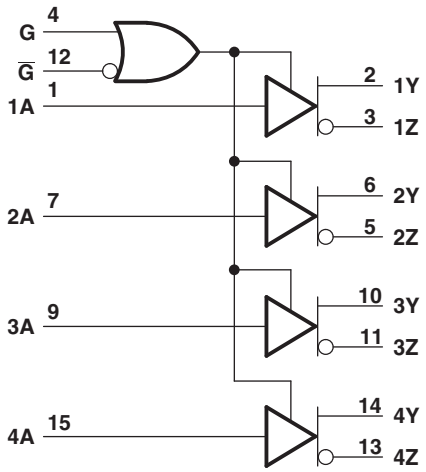


Pin numbers shown are for the D, DB, J, N, NS, PW, and W packages.

## SCHEMATICS OF INPUTS AND OUTPUTS

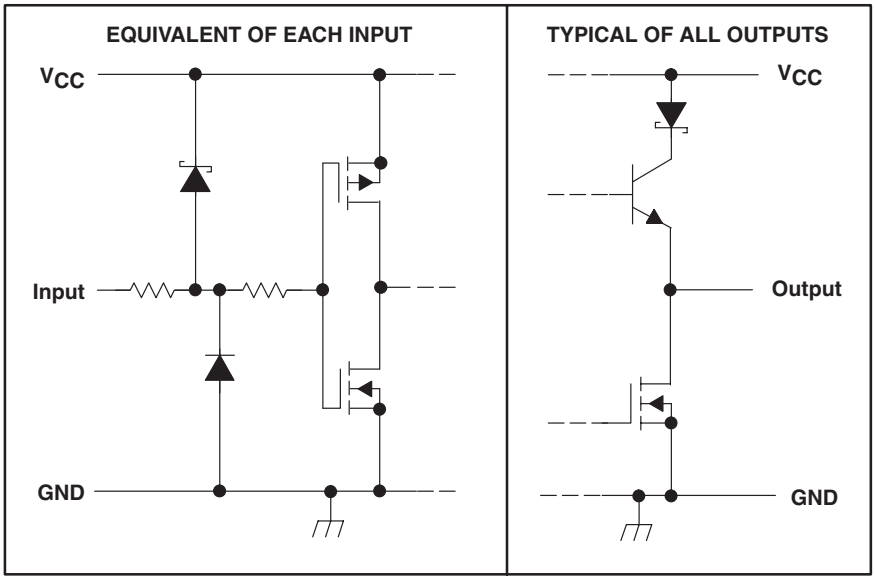

## ABSOLUTE MAXIMUM RATINGS[1]

over operating free-air temperature range (unless otherwise noted)

| | | | MIN | MAX | UNIT |
|---|---|---|---|---|---|
| $V_{CC}$ | Supply voltage range[2] | | –0.5 | 7 | V |
| $V_I$ | Input voltage range | | –0.5 | $V_{CC}$ + 0.5 | V |
| $V_{ID}$ | Differential input voltage range | | –14 | 14 | V |
| $V_O$ | Output voltage range | | –0.5 | 7 | |
| $I_{IK}$ $I_{OK}$ | Input or output clamp current | | | ±20 | mA |
| $I_O$ | Output current | | | ±150 | mA |
| | $V_{CC}$ current | | | 200 | mA |
| | GND current | | –200 | | mA |
| $\theta_{JA}$ | Package thermal impedance[3] [4] | D package | | 73 | °C/W |
| | | DB package | | 82 | |
| | | N package | | 67 | |
| | | NS package | | 64 | |
| | | PW package | | 108 | |
| $T_J$ | Operating virtual junction temperature | | | 150 | °C |
| $T_{stg}$ | Storage temperature range | | –65 | 150 | °C |

(1) Stresses beyond those listed under "absolute maximum ratings" may cause permanent damage to the device. These are stress ratings only, and functional operation of the device at these or any other conditions beyond those indicated under "recommended operating conditions" is not implied. Exposure to absolute-maximum-rated conditions for extended periods may affect device reliability.
(2) All voltage values, except differential voltages, are with respect to the network ground terminal.
(3) Maximum power dissipation is a function of $T_{J(max)}$, $\theta_{JA}$, and $T_A$. The maximum allowable power dissipation at any allowable ambient temperature is $P_D = (T_{J(max)} – T_A)/\theta_{JA}$. Operating at the absolute maximum $T_J$ of 150°C can affect reliability.
(4) The package thermal impedance is calculated in accordance with JESD 51-7.

## RECOMMENDED OPERATING CONDITIONS

| | | | MIN | NOM | MAX | UNIT |
|---|---|---|---|---|---|---|
| $V_{CC}$ | Supply voltage | | 4.5 | 5 | 5.5 | V |
| $V_{ID}$ | Differential input voltage | | | ±7 | | V |
| $V_{IH}$ | High-level input voltage | | 2 | | | V |
| $V_{IL}$ | Low-level input voltage | | | | 0.8 | V |
| $I_{OH}$ | High-level output current | | | | –20 | mA |
| $I_{OL}$ | Low-level output current | | | | 20 | mA |
| $T_A$ | Operating free-air temperature | AM26C31C | 0 | | 70 | °C |
| | | AM26C31I | –40 | | 85 | |
| | | AM26C31Q | –40 | | 125 | |
| | | AM26C31M | –55 | | 125 | |


Copyright © 1990–2011, Texas Instruments Incorporated

## ELECTRICAL CHARACTERISTICS

over recommended ranges of supply voltage and operating free-air temperature (unless otherwise noted)

| PARAMETER | | TEST CONDITIONS | | AM26C31C AM26C31I | | | UNIT |
|---|---|---|---|---|---|---|---|
| | | | | MIN | TYP(1) | MAX | |
| $V_{OH}$ | High-level output voltage | $I_O$ = –20 mA | | 2.4 | 3.4 | | V |
| $V_{OL}$ | Low-level output voltage | $I_O$ = 20 mA | | | 0.2 | 0.4 | V |
| $V_{OD}$ | Differential output voltage magnitude | $R_L$ = 100 Ω, | See Figure 1 | 2 | 3.1 | | V |
| $\Delta\|V_{OD}\|$ | Change in magnitude of differential output voltage(2) | $R_L$ = 100 Ω, | See Figure 1 | | | ±0.4 | V |
| $V_{OC}$ | Common-mode output voltage | $R_L$ = 100 Ω, | See Figure 1 | | | 3 | V |
| $\Delta\|V_{OC}\|$ | Change in magnitude of common-mode output voltage(2) | $R_L$ = 100 Ω, | See Figure 1 | | | ±0.4 | V |
| $I_I$ | Input current | $V_I = V_{CC}$ or GND | | | | ±1 | μA |
| $I_{O(off)}$ | Driver output current with power off | $V_{CC}$ = 0 | $V_O$ = 6 V | | | 100 | μA |
| | | | $V_O$ = –0.25 V | | | –100 | |
| $I_{OS}$ | Driver output short-circuit current | $V_O$ = 0 | | –30 | | –150 | mA |
| $I_{OZ}$ | High-impedance off-state output current | $V_O$ = 2.5 V | | | | 20 | μA |
| | | $V_O$ = 0.5 V | | | | –20 | |
| $I_{CC}$ | Quiescent supply current | $I_O$ = 0 | $V_I$ = 0 or 5 V | | | 100 | μA |
| | | | $V_I$ = 2.4 V or 0.5 V(3) | | 1.5 | 3 | mA |
| $C_i$ | Input capacitance | | | | 6 | | pF |

(1) All typical values are at $V_{CC}$ = 5 V and $T_A$ = 25°C.
(2) $\Delta|V_{OD}|$ and $\Delta|V_{OC}|$ are the changes in magnitude of $V_{OD}$ and $V_{OC}$, respectively, that occur when the input is changed from a high level to a low level.
(3) This parameter is measured per input. All other inputs are at 0 or 5 V.

## SWITCHING CHARACTERISTICS

over recommended ranges of supply voltage and operating free-air temperature (unless otherwise noted)

| PARAMETER | | TEST CONDITIONS | | AM26C31C AM26C31I | | | UNIT |
|---|---|---|---|---|---|---|---|
| | | | | MIN | TYP(1) | MAX | |
| $t_{PLH}$ | Propagation delay time, low-to-high-level output | S1 is open, | See Figure 2 | 3 | 7 | 12 | ns |
| $t_{PHL}$ | Propagation delay time, high-to-low-level output | | | 3 | 7 | 12 | |
| $t_{sk(p)}$ | Pulse skew time ($\|t_{PLH} – t_{PHL}\|$) | S1 is open, | See Figure 2 | | 0.5 | 4 | ns |
| $t_{r(OD)}$, $t_{f(OD)}$ | Differential output rise and fall times | S1 is open, | See Figure 3 | | 5 | 10 | ns |
| $t_{PZH}$ | Output enable time to high level | S1 is closed, | See Figure 4 | | 10 | 19 | ns |
| $t_{PZL}$ | Output enable time to low level | | | | 10 | 19 | |
| $t_{PHZ}$ | Output disable time from high level | S1 is closed, | See Figure 4 | | 7 | 16 | ns |
| $t_{PLZ}$ | Output disable time from low level | | | | 7 | 16 | |
| $C_{pd}$ | Power dissipation capacitance (each driver)(2) | S1 is open, | See Figure 2 | | 170 | | pF |

(1) All typical values are at $V_{CC}$ = 5 V and $T_A$ = 25°C.
(2) $C_{pd}$ is used to estimate the switching losses according to $P_D = C_{pd} \times V_{CC}^{\ 2} \times f$, where f is the switching frequency.

Copyright © 1990–2011, Texas Instruments Incorporated

## ELECTRICAL CHARACTERISTICS

over recommended ranges of supply voltage and operating free-air temperature (unless otherwise noted)

| PARAMETER | | TEST CONDITIONS | | AM26C31Q AM26C31M | | | UNIT |
|---|---|---|---|---|---|---|---|
| | | | | MIN | TYP(1) | MAX | |
| $V_{OH}$ | High-level output voltage | $I_O$ = –20 mA | | 2.2 | 3.4 | | V |
| $V_{OL}$ | Low-level output voltage | $I_O$ = 20 mA | | | 0.2 | 0.4 | V |
| $V_{OD}$ | Differential output voltage magnitude | $R_L$ = 100 Ω, | See Figure 1 | 2 | 3.1 | | V |
| $\Delta\|V_{OD}\|$ | Change in magnitude of differential output voltage(2) | $R_L$ = 100 Ω, | See Figure 1 | | | ±0.4 | V |
| $V_{OC}$ | Common-mode output voltage | $R_L$ = 100 Ω, | See Figure 1 | | | 3 | V |
| $\Delta\|V_{OC}\|$ | Change in magnitude of common-mode output voltage(2) | $R_L$ = 100 Ω, | See Figure 1 | | | ±0.4 | V |
| $I_I$ | Input current | $V_I = V_{CC}$ or GND | | | | ±1 | μA |
| $I_{O(off)}$ | Driver output current with power off | $V_{CC}$ = 0 | $V_O$ = 6 V | | | 100 | μA |
| | | | $V_O$ = –0.25 V | | | –100 | |
| $I_{OS}$ | Driver output short-circuit current | $V_O$ = 0 | | | | –170 | mA |
| $I_{OZ}$ | High-impedance off-state output current | $V_O$ = 2.5 V | | | | 20 | μA |
| | | $V_O$ = 0.5 V | | | | –20 | |
| $I_{CC}$ | Quiescent supply current | $I_O$ = 0 | $V_I$ = 0 or 5 V | | | 100 | μA |
| | | | $V_I$ = 2.4 V or 0.5 V(3) | | | 3.2 | mA |
| $C_i$ | Input capacitance | | | | 6 | | pF |

(1) All typical values are at $V_{CC}$ = 5 V and $T_A$ = 25°C.
(2) $\Delta|V_{OD}|$ and $\Delta|V_{OC}|$ are the changes in magnitude of $V_{OD}$ and $V_{OC}$, respectively, that occur when the input is changed from a high level to a low level.
(3) This parameter is measured per input. All other inputs are at 0 or 5 V.

## SWITCHING CHARACTERISTICS

over recommended ranges of supply voltage and operating free-air temperature (unless otherwise noted)

| PARAMETER | | TEST CONDITIONS | | AM26C31Q AM26C31M | | | UNIT |
|---|---|---|---|---|---|---|---|
| | | | | MIN | TYP(1) | MAX | |
| $t_{PLH}$ | Propagation delay time, low-to-high-level output | S1 is open, | See Figure 2 | | 7 | 12 | ns |
| $t_{PHL}$ | Propagation delay time, high-to-low-level output | | | | 6.5 | 12 | |
| $t_{sk(p)}$ | Pulse skew time ($\|t_{PLH} – t_{PHL}\|$) | S1 is open, | See Figure 2 | | 0.5 | 4 | ns |
| $t_{r(OD)}$, $t_{f(OD)}$ | Differential output rise and fall times | S1 is open, | See Figure 3 | | 5 | 12 | ns |
| $t_{PZH}$ | Output enable time to high level | S1 is closed, | See Figure 4 | | 10 | 19 | ns |
| $t_{PZL}$ | Output enable time to low level | | | | 10 | 19 | |
| $t_{PHZ}$ | Output disable time from high level | S1 is closed, | See Figure 4 | | 7 | 16 | ns |
| $t_{PLZ}$ | Output disable time from low level | | | | 7 | 16 | |
| $C_{pd}$ | Power dissipation capacitance (each driver)(2) | S1 is open, | See Figure 2 | | 100 | | pF |

(1) All typical values are at $V_{CC}$ = 5 V and $T_A$ = 25°C.
(2) $C_{pd}$ is used to estimate the switching losses according to $P_D = C_{pd} \times V_{CC}^2 \times f$, where f is the switching frequency.


Copyright © 1990–2011, Texas Instruments Incorporated

## PARAMETER MEASUREMENT INFORMATION

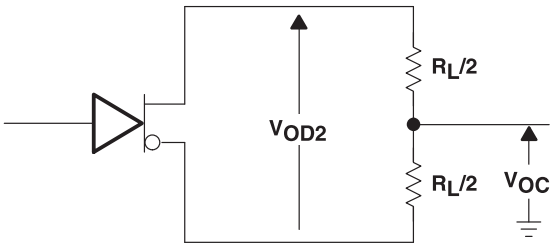


**Figure 1. Differential and Common-Mode Output Voltages**

A. C1, C2, and C3 include probe and jig capacitance.

B. All input pulses are supplied by generators having the following characteristics: PRR ≤ 1 MHz, duty cycle ≤ 50%, and $t_r$, $t_f$ ≤ 6 ns.

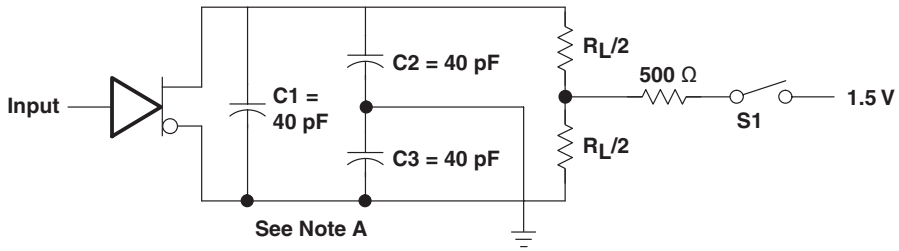


**TEST CIRCUIT**

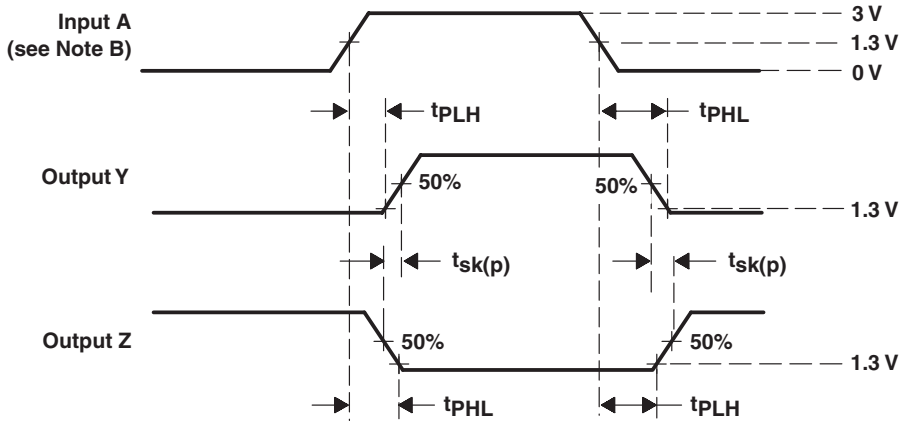


**Figure 2. Propagation Delay Time and Skew Waveforms and Test Circuit**

A. C1, C2, and C3 include probe and jig capacitance.

B. All input pulses are supplied by generators having the following characteristics: PRR ≤ 1 MHz, duty cycle ≤ 50%, and $t_r$, $t_f$ ≤ 6 ns.

Copyright © 1990–2011, Texas Instruments Incorporated

## PARAMETER MEASUREMENT INFORMATION (continued)

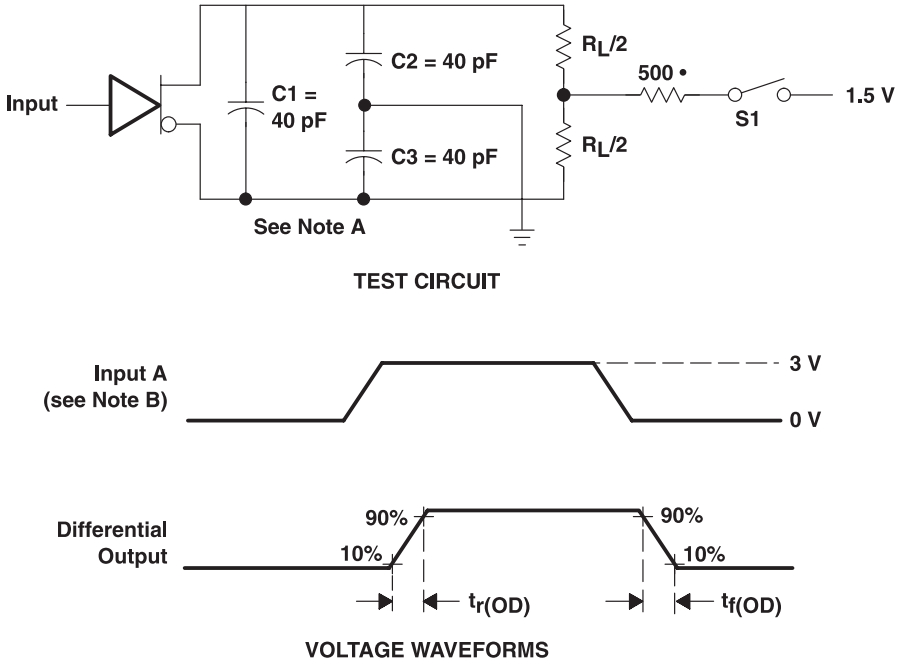


**Figure 3. Differential-Output Rise- and Fall-Time Waveforms and Test Circuit**

A. C1, C2, and C3 include probe and jig capacitance.

B. All input pulses are supplied by generators having the following characteristics: PRR ≤ 1 MHz, duty cycle ≤ 50%, and $t_r$, $t_f$ ≤ 6 ns.

C. Each enable is tested separately.

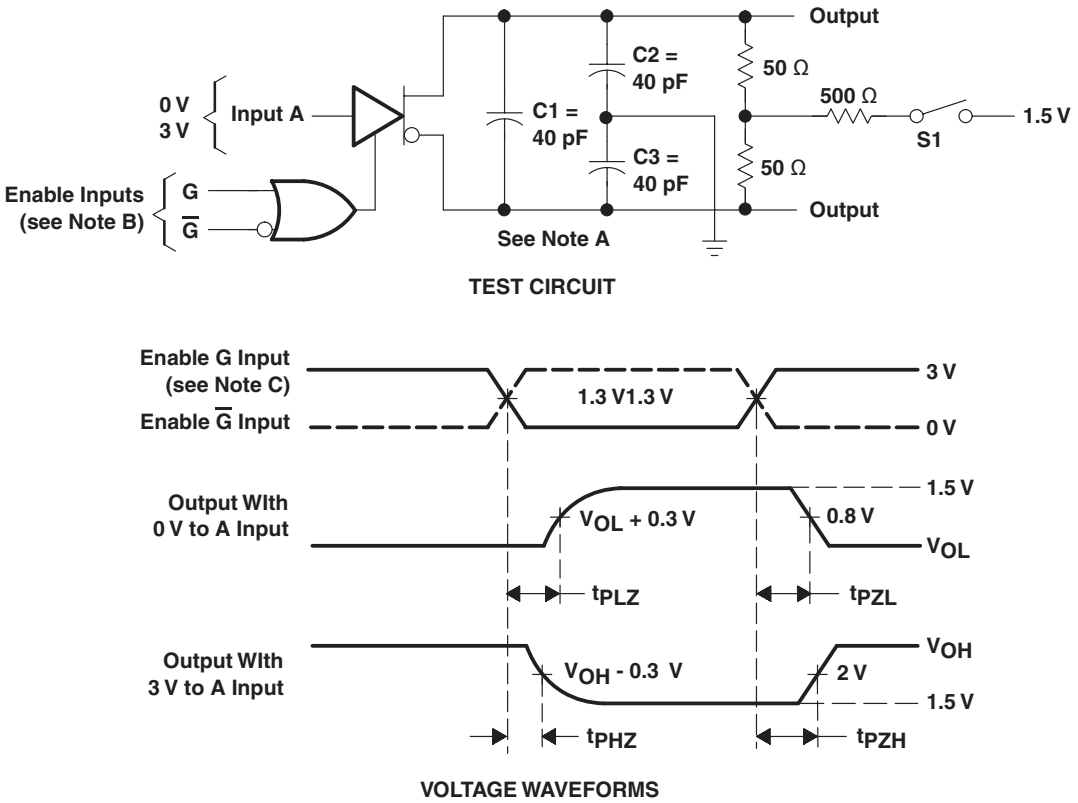


**Figure 4. Output Enable- and Disable-Time Waveforms and Test Circuit**


Copyright © 1990–2011, Texas Instruments Incorporated

## TYPICAL CHARACTERISTICS

**SUPPLY CURRENT**
**vs**
**SWITCHING FREQUENCY**

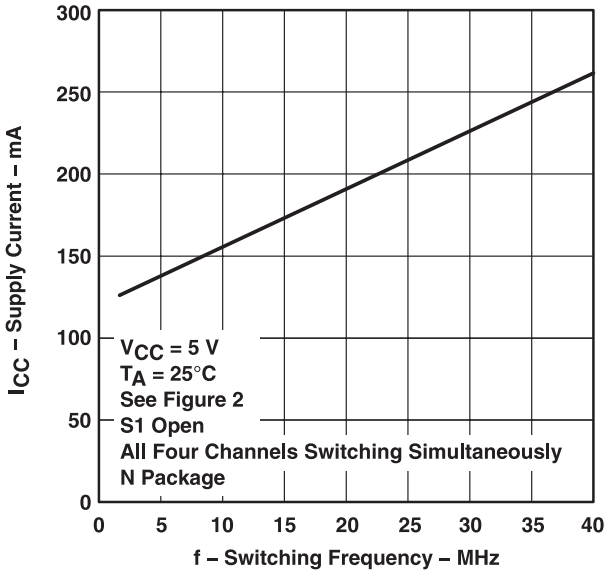


**Figure 5.**

## REVISION HISTORY

| Changes from Revision M (June 2008) to Revision N | Page |
|---|---|
| • Changed units to mA from µA to fix units typo. | 4 |


Copyright © 1990–2011, Texas Instruments Incorporated

## PACKAGING INFORMATION

| Orderable Device | Status (1) | Package Type | Package Drawing | Pins | Package Qty | Eco Plan (2) | Lead/Ball Finish | MSL Peak Temp (3) | Op Temp (°C) | Top-Side Markings (4) | Samples |
|---|---|---|---|---|---|---|---|---|---|---|---|
| 5962-9163901M2A | ACTIVE | LCCC | FK | 20 | 1 | TBD | POST-PLATE | N / A for Pkg Type | -55 to 125 | 5962-9163901M2A AM26C31M | Samples |
| 5962-9163901MEA | ACTIVE | CDIP | J | 16 | 1 | TBD | A42 | N / A for Pkg Type | -55 to 125 | 5962-9163901MEA AM26C31M | Samples |
| 5962-9163901MFA | ACTIVE | CFP | W | 16 | 1 | TBD | A42 | N / A for Pkg Type | -55 to 125 | 5962-9163901MFA AM26C31M | Samples |
| 5962-9163901Q2A | ACTIVE | LCCC | FK | 20 | 1 | TBD | Call TI | Call TI | -55 to 125 | 5962-9163901Q2A AM26C31 MFKB | Samples |
| 5962-9163901QEA | ACTIVE | CDIP | J | 16 | 1 | TBD | Call TI | Call TI | -55 to 125 | 5962-9163901QEA AM26C31MJB | Samples |
| 5962-9163901QFA | ACTIVE | CFP | W | 16 | 1 | TBD | Call TI | Call TI | -55 to 125 | 5962-9163901QFA AM26C31MWB | Samples |
| AM26C31CD | ACTIVE | SOIC | D | 16 | 40 | Green (RoHS & no Sb/Br) | CU NIPDAU | Level-1-260C-UNLIM | 0 to 70 | AM26C31C | Samples |
| AM26C31CDBLE | OBSOLETE | SSOP | DB | 16 | | TBD | Call TI | Call TI | 0 to 70 | | |
| AM26C31CDBR | ACTIVE | SSOP | DB | 16 | 2000 | Green (RoHS & no Sb/Br) | CU NIPDAU | Level-1-260C-UNLIM | 0 to 70 | 26C31 | Samples |
| AM26C31CDBRE4 | ACTIVE | SSOP | DB | 16 | 2000 | Green (RoHS & no Sb/Br) | CU NIPDAU | Level-1-260C-UNLIM | 0 to 70 | 26C31 | Samples |
| AM26C31CDBRG4 | ACTIVE | SSOP | DB | 16 | 2000 | Green (RoHS & no Sb/Br) | CU NIPDAU | Level-1-260C-UNLIM | 0 to 70 | 26C31 | Samples |
| AM26C31CDE4 | ACTIVE | SOIC | D | 16 | 40 | Green (RoHS & no Sb/Br) | CU NIPDAU | Level-1-260C-UNLIM | 0 to 70 | AM26C31C | Samples |
| AM26C31CDG4 | ACTIVE | SOIC | D | 16 | 40 | Green (RoHS & no Sb/Br) | CU NIPDAU | Level-1-260C-UNLIM | 0 to 70 | AM26C31C | Samples |
| AM26C31CDR | ACTIVE | SOIC | D | 16 | 2500 | Green (RoHS & no Sb/Br) | CU NIPDAU | Level-1-260C-UNLIM | 0 to 70 | AM26C31C | Samples |

| Orderable Device | Status (1) | Package Type | Package Drawing | Pins | Package Qty | Eco Plan (2) | Lead/Ball Finish | MSL Peak Temp (3) | Op Temp (°C) | Top-Side Markings (4) | Samples |
|---|---|---|---|---|---|---|---|---|---|---|---|
| AM26C31CDRE4 | ACTIVE | SOIC | D | 16 | 2500 | Green (RoHS & no Sb/Br) | CU NIPDAU | Level-1-260C-UNLIM | 0 to 70 | AM26C31C | Samples |
| AM26C31CDRG4 | ACTIVE | SOIC | D | 16 | 2500 | Green (RoHS & no Sb/Br) | CU NIPDAU | Level-1-260C-UNLIM | 0 to 70 | AM26C31C | Samples |
| AM26C31CN | ACTIVE | PDIP | N | 16 | 25 | Pb-Free (RoHS) | CU NIPDAU | N / A for Pkg Type | 0 to 70 | AM26C31CN | Samples |
| AM26C31CNE4 | ACTIVE | PDIP | N | 16 | 25 | Pb-Free (RoHS) | CU NIPDAU | N / A for Pkg Type | 0 to 70 | AM26C31CN | Samples |
| AM26C31CNSR | ACTIVE | SO | NS | 16 | 2000 | Green (RoHS & no Sb/Br) | CU NIPDAU | Level-1-260C-UNLIM | 0 to 70 | 26C31 | Samples |
| AM26C31CNSRE4 | ACTIVE | SO | NS | 16 | 2000 | Green (RoHS & no Sb/Br) | CU NIPDAU | Level-1-260C-UNLIM | 0 to 70 | 26C31 | Samples |
| AM26C31CNSRG4 | ACTIVE | SO | NS | 16 | 2000 | Green (RoHS & no Sb/Br) | CU NIPDAU | Level-1-260C-UNLIM | 0 to 70 | 26C31 | Samples |
| AM26C31ID | ACTIVE | SOIC | D | 16 | 40 | Green (RoHS & no Sb/Br) | CU NIPDAU | Level-1-260C-UNLIM | -40 to 85 | AM26C31I | Samples |
| AM26C31IDBLE | OBSOLETE | SSOP | DB | 16 | | TBD | Call TI | Call TI | -40 to 85 | | |
| AM26C31IDBR | ACTIVE | SSOP | DB | 16 | 2000 | Green (RoHS & no Sb/Br) | CU NIPDAU | Level-1-260C-UNLIM | -40 to 85 | 26C31I | Samples |
| AM26C31IDBRE4 | ACTIVE | SSOP | DB | 16 | 2000 | Green (RoHS & no Sb/Br) | CU NIPDAU | Level-1-260C-UNLIM | -40 to 85 | 26C31I | Samples |
| AM26C31IDBRG4 | ACTIVE | SSOP | DB | 16 | 2000 | Green (RoHS & no Sb/Br) | CU NIPDAU | Level-1-260C-UNLIM | -40 to 85 | 26C31I | Samples |
| AM26C31IDE4 | ACTIVE | SOIC | D | 16 | 40 | Green (RoHS & no Sb/Br) | CU NIPDAU | Level-1-260C-UNLIM | -40 to 85 | AM26C31I | Samples |
| AM26C31IDG4 | ACTIVE | SOIC | D | 16 | 40 | Green (RoHS & no Sb/Br) | CU NIPDAU | Level-1-260C-UNLIM | -40 to 85 | AM26C31I | Samples |
| AM26C31IDR | ACTIVE | SOIC | D | 16 | 2500 | Green (RoHS & no Sb/Br) | CU NIPDAU | Level-1-260C-UNLIM | -40 to 85 | AM26C31I | Samples |
| AM26C31IDRE4 | ACTIVE | SOIC | D | 16 | 2500 | Green (RoHS & no Sb/Br) | CU NIPDAU | Level-1-260C-UNLIM | -40 to 85 | AM26C31I | Samples |
| AM26C31IDRG4 | ACTIVE | SOIC | D | 16 | 2500 | Green (RoHS & no Sb/Br) | CU NIPDAU | Level-1-260C-UNLIM | -40 to 85 | AM26C31I | Samples |
| AM26C31IN | ACTIVE | PDIP | N | 16 | 25 | Pb-Free (RoHS) | CU NIPDAU | N / A for Pkg Type | -40 to 85 | AM26C31IN | Samples |

| Orderable Device | Status (1) | Package Type | Package Drawing | Pins | Package Qty | Eco Plan (2) | Lead/Ball Finish | MSL Peak Temp (3) | Op Temp (°C) | Top-Side Markings (4) | Samples |
|---|---|---|---|---|---|---|---|---|---|---|---|
| AM26C31INE4 | ACTIVE | PDIP | N | 16 | 25 | Pb-Free (RoHS) | CU NIPDAU | N / A for Pkg Type | -40 to 85 | AM26C31IN | Samples |
| AM26C31INSR | ACTIVE | SO | NS | 16 | 2000 | Green (RoHS & no Sb/Br) | CU NIPDAU | Level-1-260C-UNLIM | -40 to 85 | 26C31I | Samples |
| AM26C31INSRG4 | ACTIVE | SO | NS | 16 | 2000 | Green (RoHS & no Sb/Br) | CU NIPDAU | Level-1-260C-UNLIM | -40 to 85 | 26C31I | Samples |
| AM26C31IPW | ACTIVE | TSSOP | PW | 16 | 90 | Green (RoHS & no Sb/Br) | CU NIPDAU | Level-1-260C-UNLIM | -40 to 85 | 26C31I | Samples |
| AM26C31IPWE4 | ACTIVE | TSSOP | PW | 16 | 90 | Green (RoHS & no Sb/Br) | CU NIPDAU | Level-1-260C-UNLIM | -40 to 85 | 26C31I | Samples |
| AM26C31IPWG4 | ACTIVE | TSSOP | PW | 16 | 90 | Green (RoHS & no Sb/Br) | CU NIPDAU | Level-1-260C-UNLIM | -40 to 85 | 26C31I | Samples |
| AM26C31IPWR | ACTIVE | TSSOP | PW | 16 | 2000 | Green (RoHS & no Sb/Br) | CU NIPDAU | Level-1-260C-UNLIM | -40 to 85 | 26C31I | Samples |
| AM26C31IPWRG4 | ACTIVE | TSSOP | PW | 16 | 2000 | Green (RoHS & no Sb/Br) | CU NIPDAU | Level-1-260C-UNLIM | -40 to 85 | 26C31I | Samples |
| AM26C31MFKB | ACTIVE | LCCC | FK | 20 | 1 | TBD | POST-PLATE | N / A for Pkg Type | -55 to 125 | 5962-9163901Q2A AM26C31 MFKB | Samples |
| AM26C31MJB | ACTIVE | CDIP | J | 16 | 1 | TBD | A42 | N / A for Pkg Type | -55 to 125 | 5962-9163901QE A AM26C31MJB | Samples |
| AM26C31MWB | ACTIVE | CFP | W | 16 | 1 | TBD | A42 | N / A for Pkg Type | -55 to 125 | 5962-9163901QF A AM26C31MWB | Samples |
| AM26C31QD | ACTIVE | SOIC | D | 16 | 40 | Green (RoHS & no Sb/Br) | CU NIPDAU | Level-1-260C-UNLIM | -40 to 125 | AM26C31Q | Samples |
| AM26C31QDG4 | ACTIVE | SOIC | D | 16 | 40 | Green (RoHS & no Sb/Br) | CU NIPDAU | Level-1-260C-UNLIM | -40 to 125 | 26C31Q | Samples |
| AM26C31QDR | ACTIVE | SOIC | D | 16 | 2500 | Green (RoHS & no Sb/Br) | CU NIPDAU | Level-1-260C-UNLIM | -40 to 125 | AM26C31Q | Samples |
| AM26C31QDRG4 | ACTIVE | SOIC | D | 16 | 2500 | Green (RoHS & no Sb/Br) | CU NIPDAU | Level-1-260C-UNLIM | -40 to 125 | 26C31Q | Samples |

(1) The marketing status values are defined as follows:
**ACTIVE:** Product device recommended for new designs.

**LIFEBUY:** TI has announced that the device will be discontinued, and a lifetime-buy period is in effect.
**NRND:** Not recommended for new designs. Device is in production to support existing customers, but TI does not recommend using this part in a new design.
**PREVIEW:** Device has been announced but is not in production. Samples may or may not be available.
**OBSOLETE:** TI has discontinued the production of the device.

(2) Eco Plan - The planned eco-friendly classification: Pb-Free (RoHS), Pb-Free (RoHS Exempt), or Green (RoHS & no Sb/Br) - please check http://www.ti.com/productcontent for the latest availability information and additional product content details.
**TBD:** The Pb-Free/Green conversion plan has not been defined.
**Pb-Free (RoHS):** TI's terms "Lead-Free" or "Pb-Free" mean semiconductor products that are compatible with the current RoHS requirements for all 6 substances, including the requirement that lead not exceed 0.1% by weight in homogeneous materials. Where designed to be soldered at high temperatures, TI Pb-Free products are suitable for use in specified lead-free processes.
**Pb-Free (RoHS Exempt):** This component has a RoHS exemption for either 1) lead-based flip-chip solder bumps used between the die and package, or 2) lead-based die adhesive used between the die and leadframe. The component is otherwise considered Pb-Free (RoHS compatible) as defined above.
**Green (RoHS & no Sb/Br):** TI defines "Green" to mean Pb-Free (RoHS compatible), and free of Bromine (Br) and Antimony (Sb) based flame retardants (Br or Sb do not exceed 0.1% by weight in homogeneous material)

(3) MSL, Peak Temp. -- The Moisture Sensitivity Level rating according to the JEDEC industry standard classifications, and peak solder temperature.

(4) Only one of markings shown within the brackets will appear on the physical device.

**Important Information and Disclaimer:**The information provided on this page represents TI's knowledge and belief as of the date that it is provided. TI bases its knowledge and belief on information provided by third parties, and makes no representation or warranty as to the accuracy of such information. Efforts are underway to better integrate information from third parties. TI has taken and continues to take reasonable steps to provide representative and accurate information but may not have conducted destructive testing or chemical analysis on incoming materials and chemicals. TI and TI suppliers consider certain information to be proprietary, and thus CAS numbers and other limited information may not be available for release.

In no event shall TI's liability arising out of such information exceed the total purchase price of the TI part(s) at issue in this document sold by TI to Customer on an annual basis.

**OTHER QUALIFIED VERSIONS OF AM26C31, AM26C31M :**

- Catalog: AM26C31
- Enhanced Product: AM26C31-EP, AM26C31-EP
- Military: AM26C31M

NOTE: Qualified Version Definitions:

- Catalog - TI's standard catalog product
- Enhanced Product - Supports Defense, Aerospace and Medical Applications

- Military - QML certified for Military and Defense Applications

## TAPE AND REEL INFORMATION

**REEL DIMENSIONS**

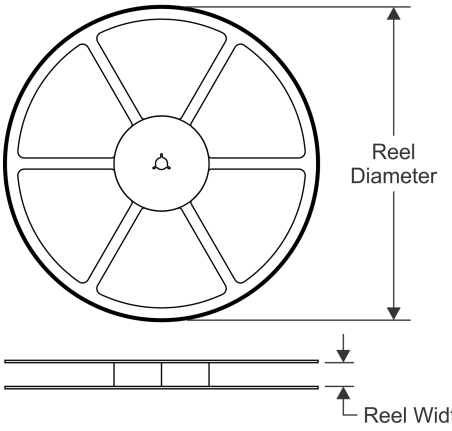


**TAPE DIMENSIONS**

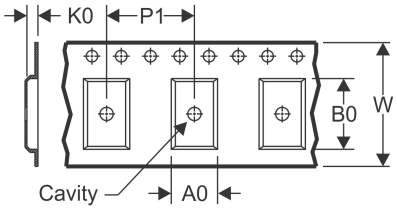


| | |
|---|---|
| A0 | Dimension designed to accommodate the component width |
| B0 | Dimension designed to accommodate the component length |
| K0 | Dimension designed to accommodate the component thickness |
| W | Overall width of the carrier tape |
| P1 | Pitch between successive cavity centers |

**QUADRANT ASSIGNMENTS FOR PIN 1 ORIENTATION IN TAPE**

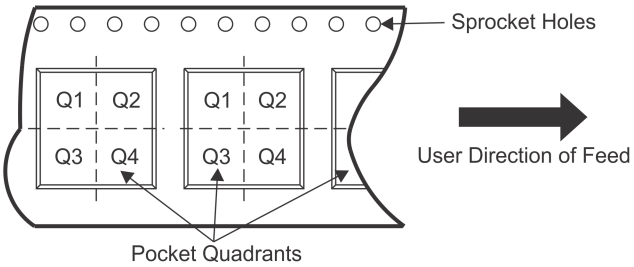


*All dimensions are nominal

| Device | Package Type | Package Drawing | Pins | SPQ | Reel Diameter (mm) | Reel Width W1 (mm) | A0 (mm) | B0 (mm) | K0 (mm) | P1 (mm) | W (mm) | Pin1 Quadrant |
|---|---|---|---|---|---|---|---|---|---|---|---|---|
| AM26C31CDBR | SSOP | DB | 16 | 2000 | 330.0 | 16.4 | 8.2 | 6.6 | 2.5 | 12.0 | 16.0 | Q1 |
| AM26C31CDR | SOIC | D | 16 | 2500 | 330.0 | 16.4 | 6.5 | 10.3 | 2.1 | 8.0 | 16.0 | Q1 |
| AM26C31CNSR | SO | NS | 16 | 2000 | 330.0 | 16.4 | 8.2 | 10.5 | 2.5 | 12.0 | 16.0 | Q1 |
| AM26C31IDBR | SSOP | DB | 16 | 2000 | 330.0 | 16.4 | 8.2 | 6.6 | 2.5 | 12.0 | 16.0 | Q1 |
| AM26C31IDR | SOIC | D | 16 | 2500 | 330.0 | 16.4 | 6.5 | 10.3 | 2.1 | 8.0 | 16.0 | Q1 |
| AM26C31IDRG4 | SOIC | D | 16 | 2500 | 330.0 | 16.4 | 6.5 | 10.3 | 2.1 | 8.0 | 16.0 | Q1 |
| AM26C31INSR | SO | NS | 16 | 2000 | 330.0 | 16.4 | 8.2 | 10.5 | 2.5 | 12.0 | 16.0 | Q1 |
| AM26C31IPWR | TSSOP | PW | 16 | 2000 | 330.0 | 12.4 | 6.9 | 5.6 | 1.6 | 8.0 | 12.0 | Q1 |
| AM26C31QDR | SOIC | D | 16 | 2500 | 330.0 | 16.4 | 6.5 | 10.3 | 2.1 | 8.0 | 16.0 | Q1 |
| AM26C31QDRG4 | SOIC | D | 16 | 2500 | 330.0 | 16.4 | 6.5 | 10.3 | 2.1 | 8.0 | 16.0 | Q1 |

**TAPE AND REEL BOX DIMENSIONS**

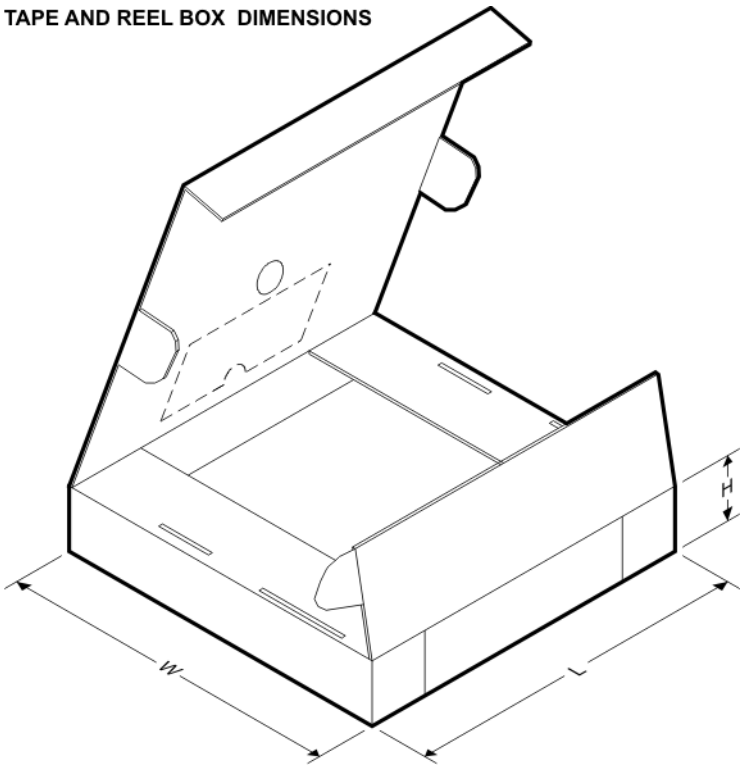


*All dimensions are nominal

| Device | Package Type | Package Drawing | Pins | SPQ | Length (mm) | Width (mm) | Height (mm) |
|---|---|---|---|---|---|---|---|
| AM26C31CDBR | SSOP | DB | 16 | 2000 | 367.0 | 367.0 | 38.0 |
| AM26C31CDR | SOIC | D | 16 | 2500 | 333.2 | 345.9 | 28.6 |
| AM26C31CNSR | SO | NS | 16 | 2000 | 367.0 | 367.0 | 38.0 |
| AM26C31IDBR | SSOP | DB | 16 | 2000 | 367.0 | 367.0 | 38.0 |
| AM26C31IDR | SOIC | D | 16 | 2500 | 333.2 | 345.9 | 28.6 |
| AM26C31IDRG4 | SOIC | D | 16 | 2500 | 333.2 | 345.9 | 28.6 |
| AM26C31INSR | SO | NS | 16 | 2000 | 367.0 | 367.0 | 38.0 |
| AM26C31IPWR | TSSOP | PW | 16 | 2000 | 367.0 | 367.0 | 35.0 |
| AM26C31QDR | SOIC | D | 16 | 2500 | 367.0 | 367.0 | 38.0 |
| AM26C31QDRG4 | SOIC | D | 16 | 2500 | 333.2 | 345.9 | 28.6 |

J (R–GDIP–T**) CERAMIC DUAL IN–LINE PACKAGE

14 LEADS SHOWN

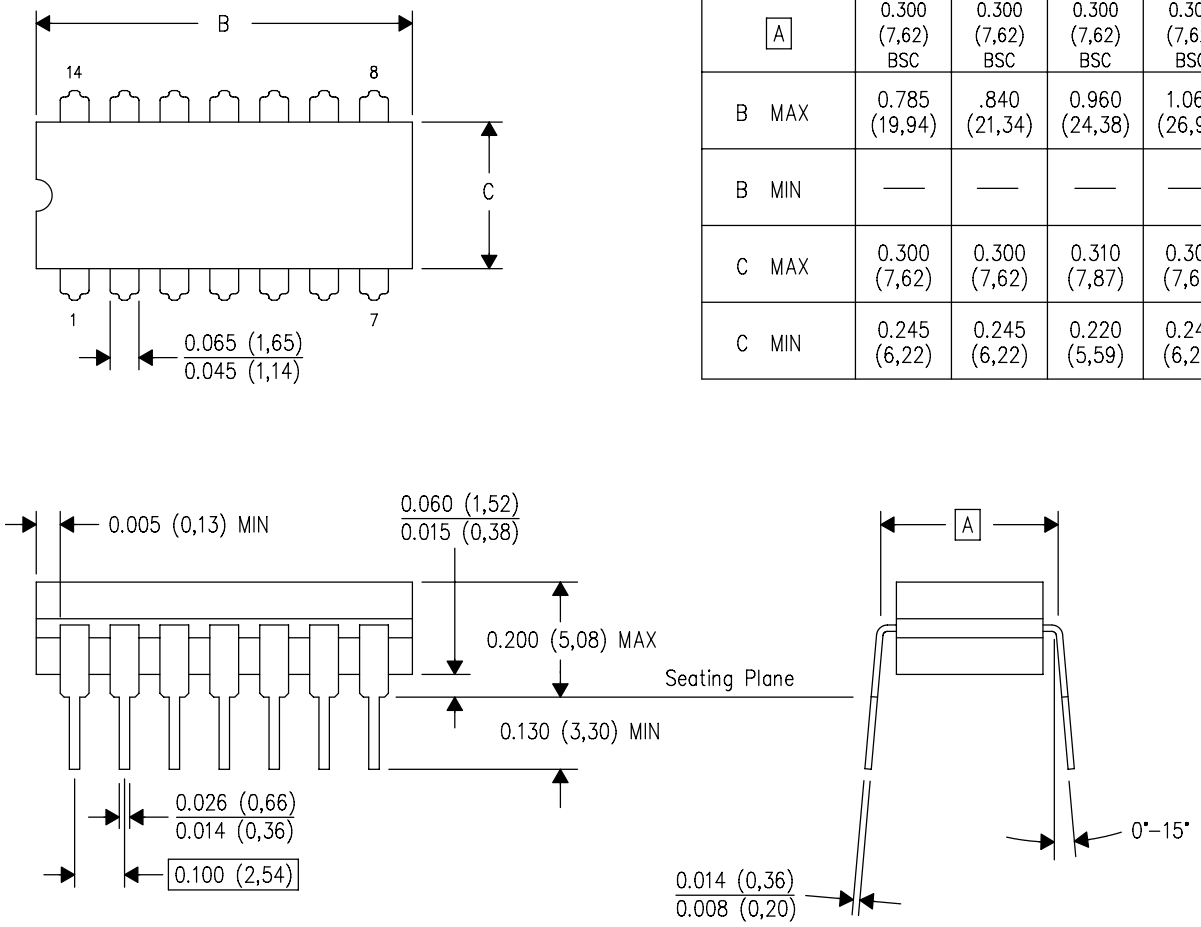


| DIM \ PINS ** | 14 | 16 | 18 | 20 |
|---|---|---|---|---|
| A | 0.300 (7,62) BSC | 0.300 (7,62) BSC | 0.300 (7,62) BSC | 0.300 (7,62) BSC |
| B MAX | 0.785 (19,94) | .840 (21,34) | 0.960 (24,38) | 1.060 (26,92) |
| B MIN | — | — | — | — |
| C MAX | 0.300 (7,62) | 0.300 (7,62) | 0.310 (7,87) | 0.300 (7,62) |
| C MIN | 0.245 (6,22) | 0.245 (6,22) | 0.220 (5,59) | 0.245 (6,22) |

4040083/F 03/03

NOTES:
- A. All linear dimensions are in inches (millimeters).
- B. This drawing is subject to change without notice.
- C. This package is hermetically sealed with a ceramic lid using glass frit.
- D. Index point is provided on cap for terminal identification only on press ceramic glass frit seal only.
- E. Falls within MIL STD 1835 GDIP1–T14, GDIP1–T16, GDIP1–T18 and GDIP1–T20.

## W (R–GDFP–F16) CERAMIC DUAL FLATPACK

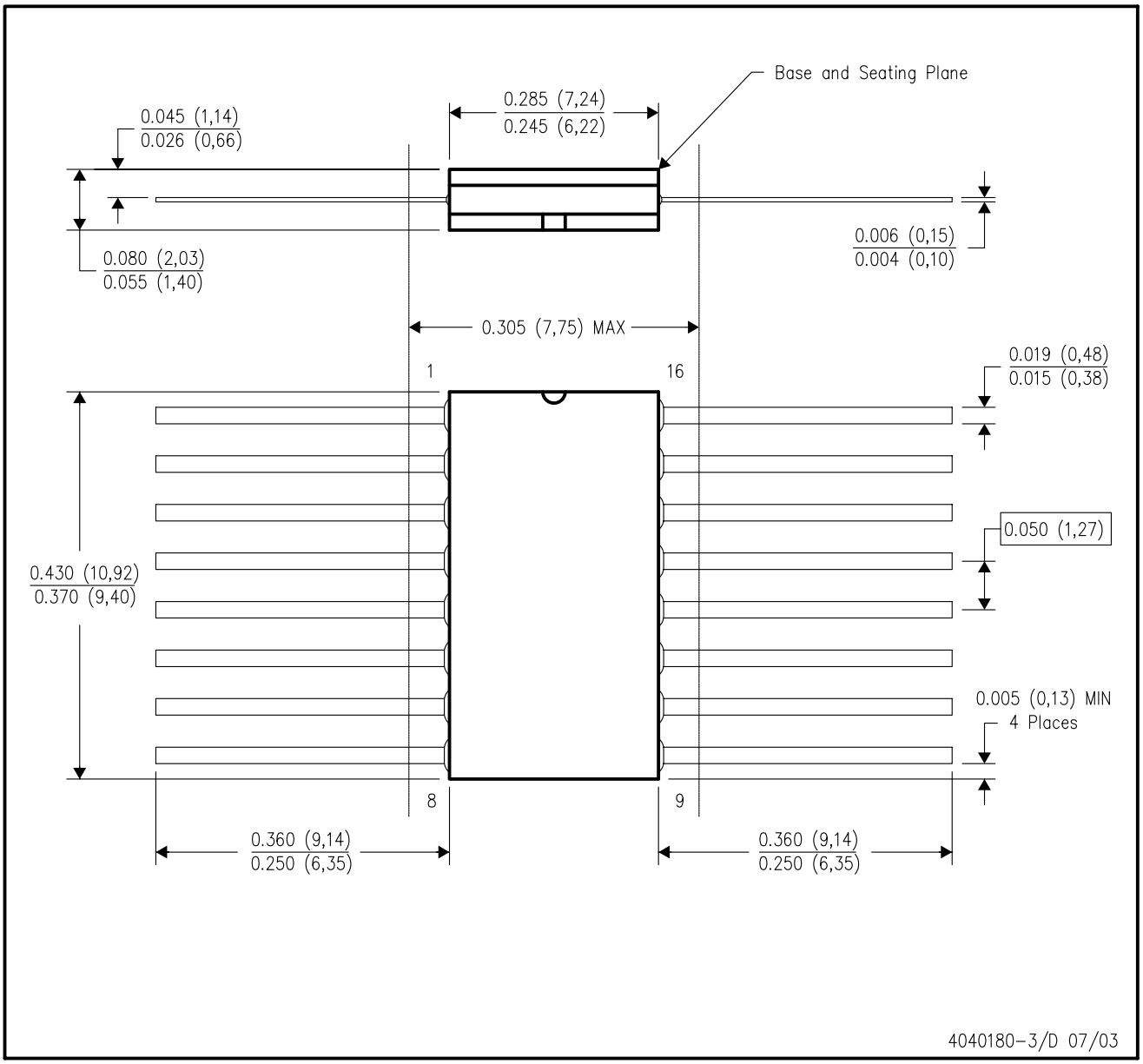


NOTES:
A. All linear dimensions are in inches (millimeters).
B. This drawing is subject to change without notice.
C. This package can be hermetically sealed with a ceramic lid using glass frit.
D. Index point is provided on cap for terminal identification only.
E. Falls within MIL STD 1835 GDFP1–F16 and JEDEC MO–092AC

FK (S–CQCC–N**) LEADLESS CERAMIC CHIP CARRIER

28 TERMINAL SHOWN

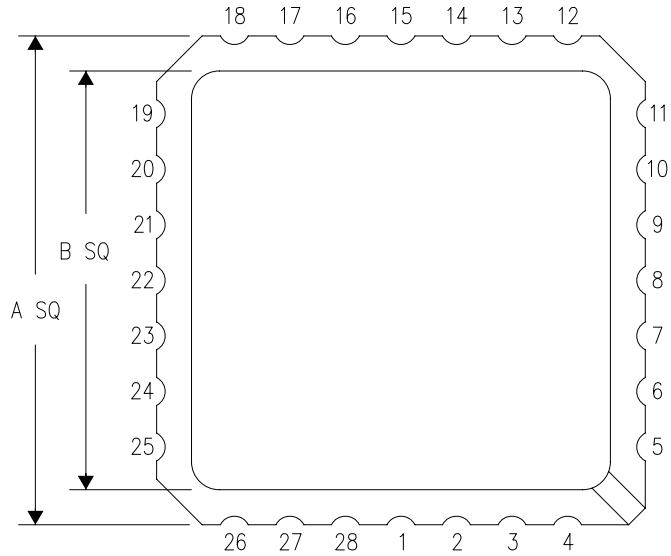


| NO. OF TERMINALS ** | A | | B | |
|---|---|---|---|---|
| | MIN | MAX | MIN | MAX |
| 20 | 0.342 (8,69) | 0.358 (9,09) | 0.307 (7,80) | 0.358 (9,09) |
| 28 | 0.442 (11,23) | 0.458 (11,63) | 0.406 (10,31) | 0.458 (11,63) |
| 44 | 0.640 (16,26) | 0.660 (16,76) | 0.495 (12,58) | 0.560 (14,22) |
| 52 | 0.740 (18,78) | 0.761 (19,32) | 0.495 (12,58) | 0.560 (14,22) |
| 68 | 0.938 (23,83) | 0.962 (24,43) | 0.850 (21,6) | 0.858 (21,8) |
| 84 | 1.141 (28,99) | 1.165 (29,59) | 1.047 (26,6) | 1.063 (27,0) |

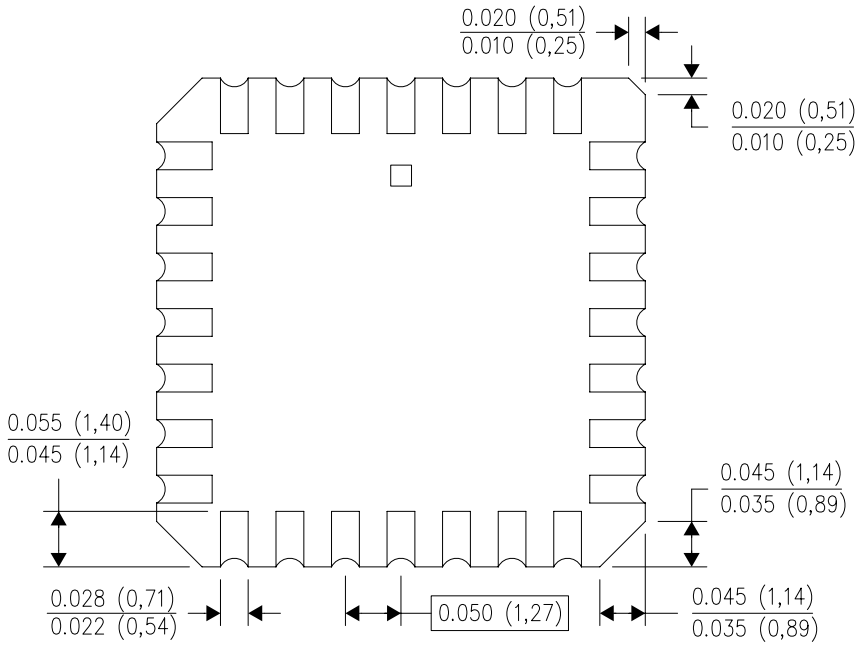


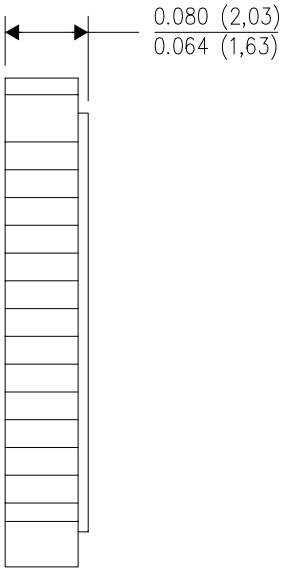


4040140/D 01/11

NOTES:
A. All linear dimensions are in inches (millimeters).
B. This drawing is subject to change without notice.
C. This package can be hermetically sealed with a metal lid.
D. Falls within JEDEC MS–004

D (R–PDSO–G16) PLASTIC SMALL OUTLINE

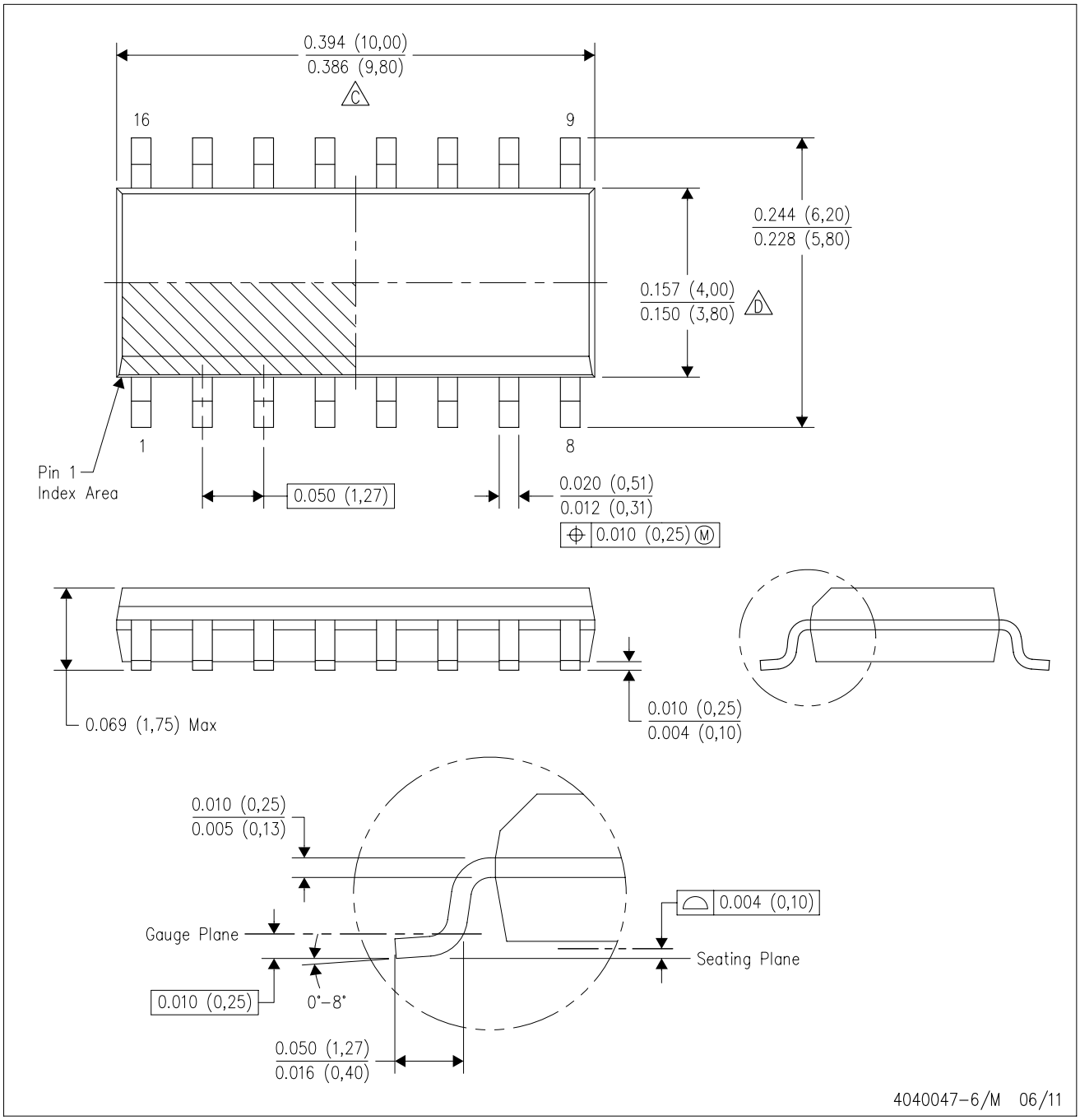


NOTES:
A. All linear dimensions are in inches (millimeters).
B. This drawing is subject to change without notice.
C. Body length does not include mold flash, protrusions, or gate burrs. Mold flash, protrusions, or gate burrs shall not exceed 0.006 (0,15) each side.
D. Body width does not include interlead flash. Interlead flash shall not exceed 0.017 (0,43) each side.
E. Reference JEDEC MS–012 variation AC.

D (R–PDSO–G16) PLASTIC SMALL OUTLINE

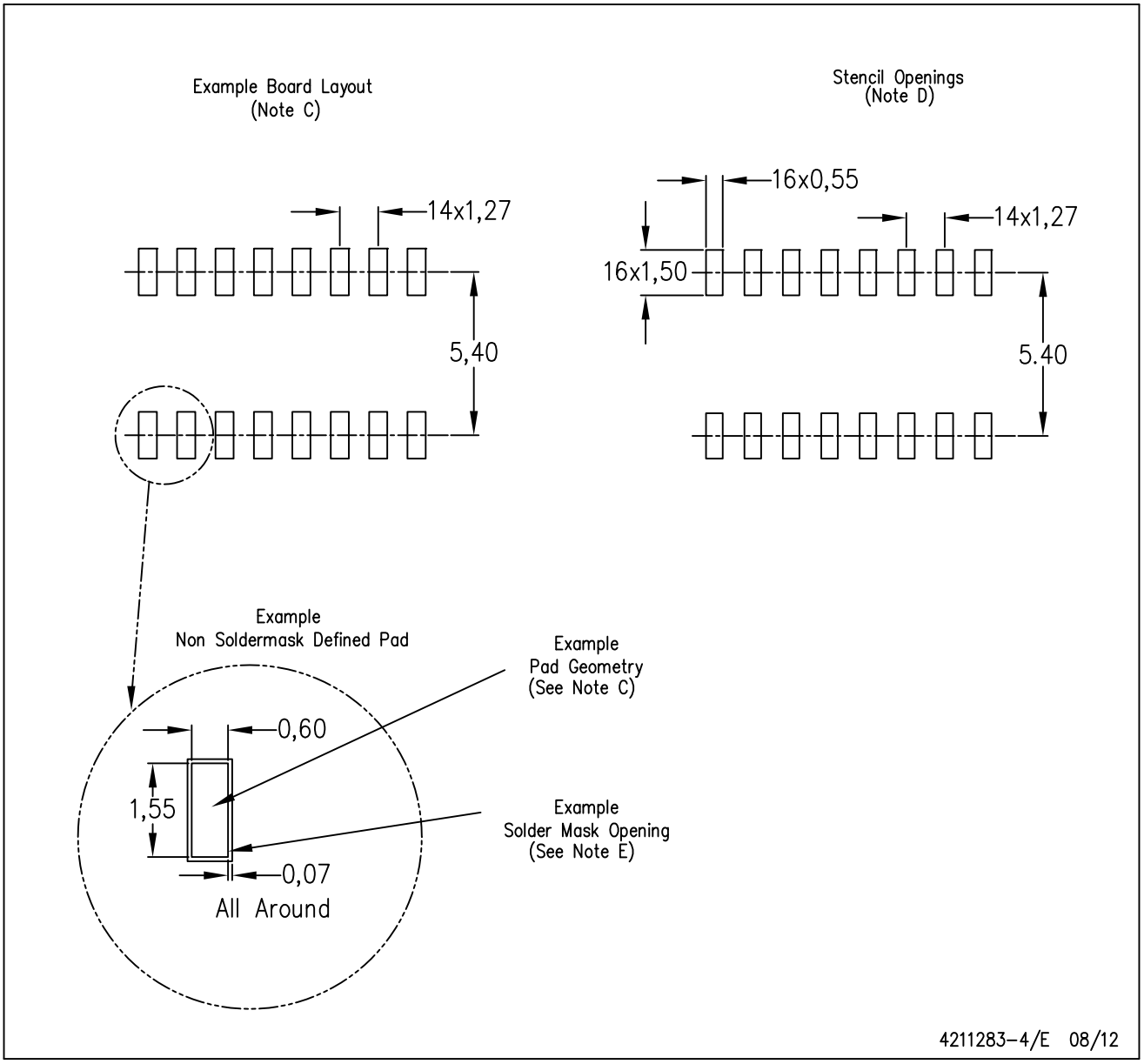


NOTES:
A. All linear dimensions are in millimeters.
B. This drawing is subject to change without notice.
C. Publication IPC–7351 is recommended for alternate designs.
D. Laser cutting apertures with trapezoidal walls and also rounding corners will offer better paste release. Customers should contact their board assembly site for stencil design recommendations. Refer to IPC–7525 for other stencil recommendations.
E. Customers should contact their board fabrication site for solder mask tolerances between and around signal pads.

PW (R–PDSO–G16) PLASTIC SMALL OUTLINE

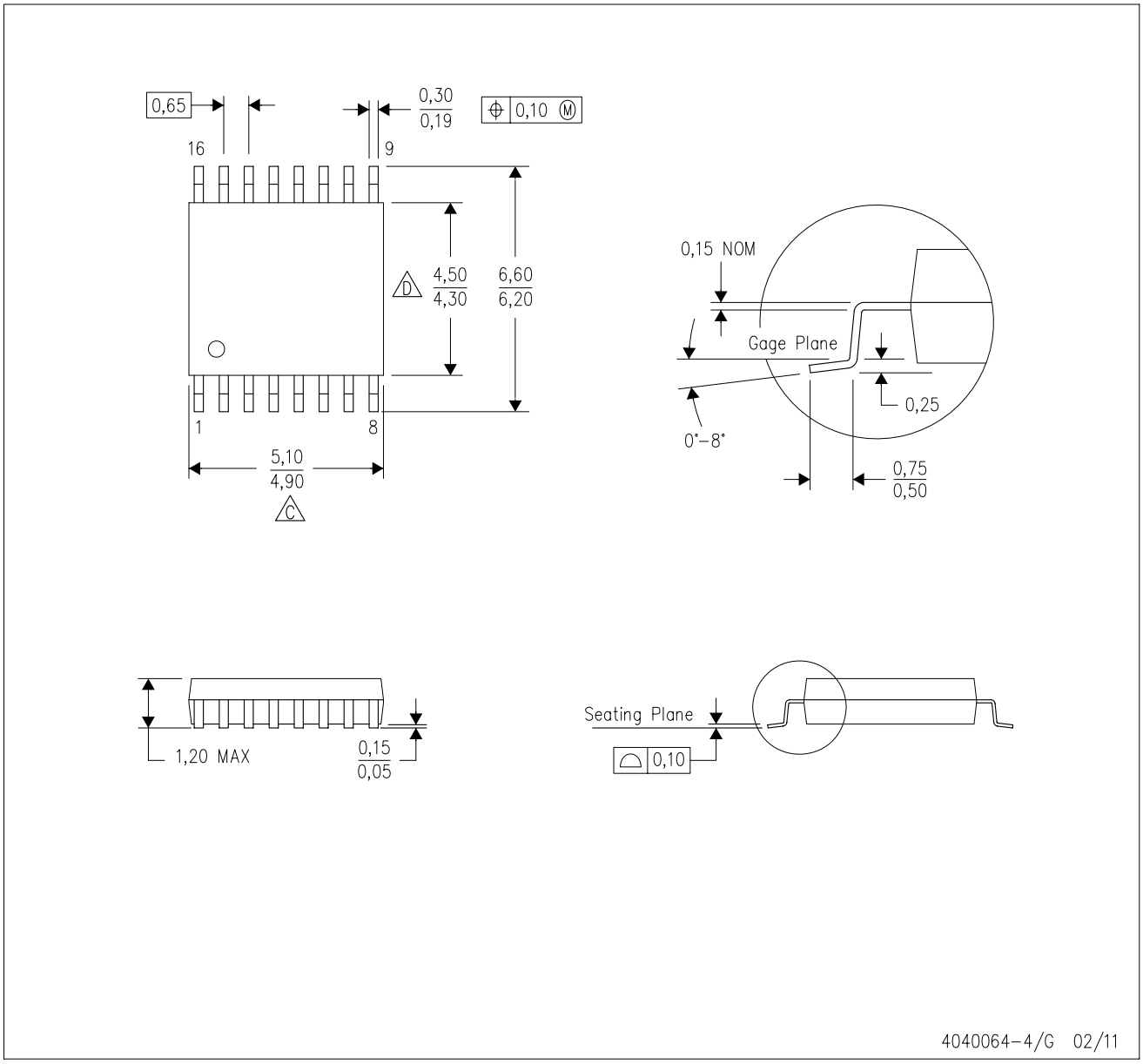


NOTES:
A. All linear dimensions are in millimeters. Dimensioning and tolerancing per ASME Y14.5M–1994.
B. This drawing is subject to change without notice.
C. Body length does not include mold flash, protrusions, or gate burrs. Mold flash, protrusions, or gate burrs shall not exceed 0,15 each side.
D. Body width does not include interlead flash. Interlead flash shall not exceed 0,25 each side.
E. Falls within JEDEC MO–153

PW (R–PDSO–G16) PLASTIC SMALL OUTLINE

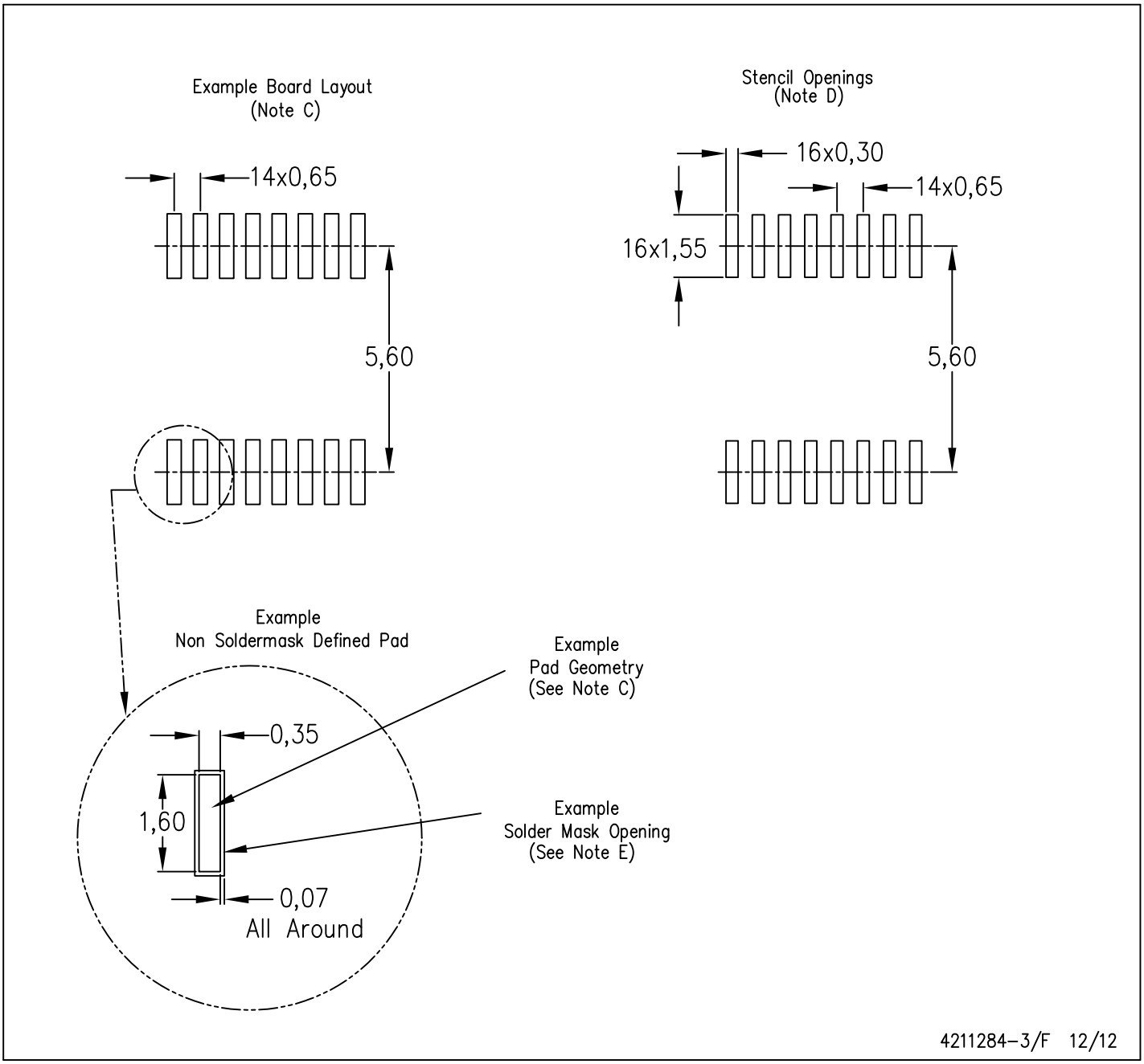


NOTES:
A. All linear dimensions are in millimeters.
B. This drawing is subject to change without notice.
C. Publication IPC–7351 is recommended for alternate designs.
D. Laser cutting apertures with trapezoidal walls and also rounding corners will offer better paste release. Customers should contact their board assembly site for stencil design recommendations. Refer to IPC–7525 for other stencil recommendations.
E. Customers should contact their board fabrication site for solder mask tolerances between and around signal pads.

## MECHANICAL DATA

**NS (R-PDSO-G**)** **PLASTIC SMALL-OUTLINE PACKAGE**

**14-PINS SHOWN**

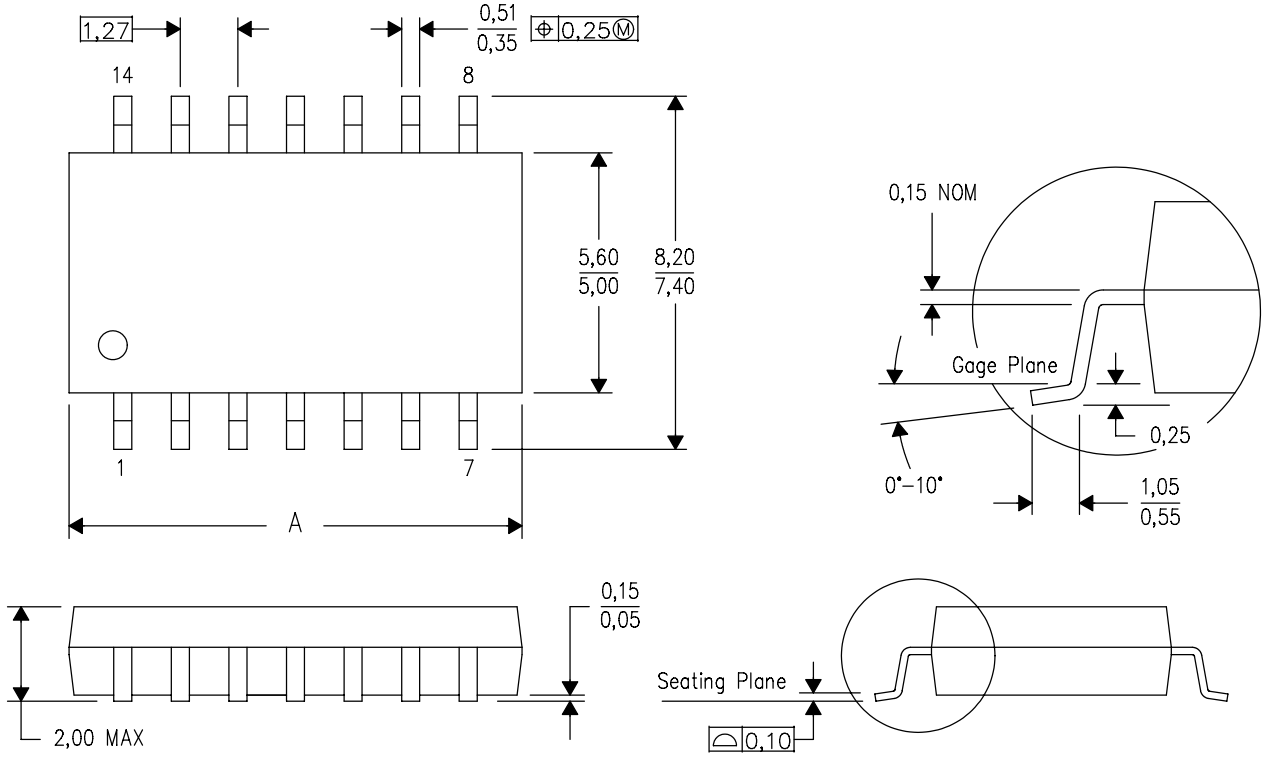


| DIM \ PINS ** | 14 | 16 | 20 | 24 |
|---|---|---|---|---|
| A MAX | 10,50 | 10,50 | 12,90 | 15,30 |
| A MIN | 9,90 | 9,90 | 12,30 | 14,70 |

4040062/C 03/03

NOTES:
A. All linear dimensions are in millimeters.
B. This drawing is subject to change without notice.
C. Body dimensions do not include mold flash or protrusion, not to exceed 0,15.

**DB (R-PDSO-G**)** **PLASTIC SMALL-OUTLINE**

**28 PINS SHOWN**

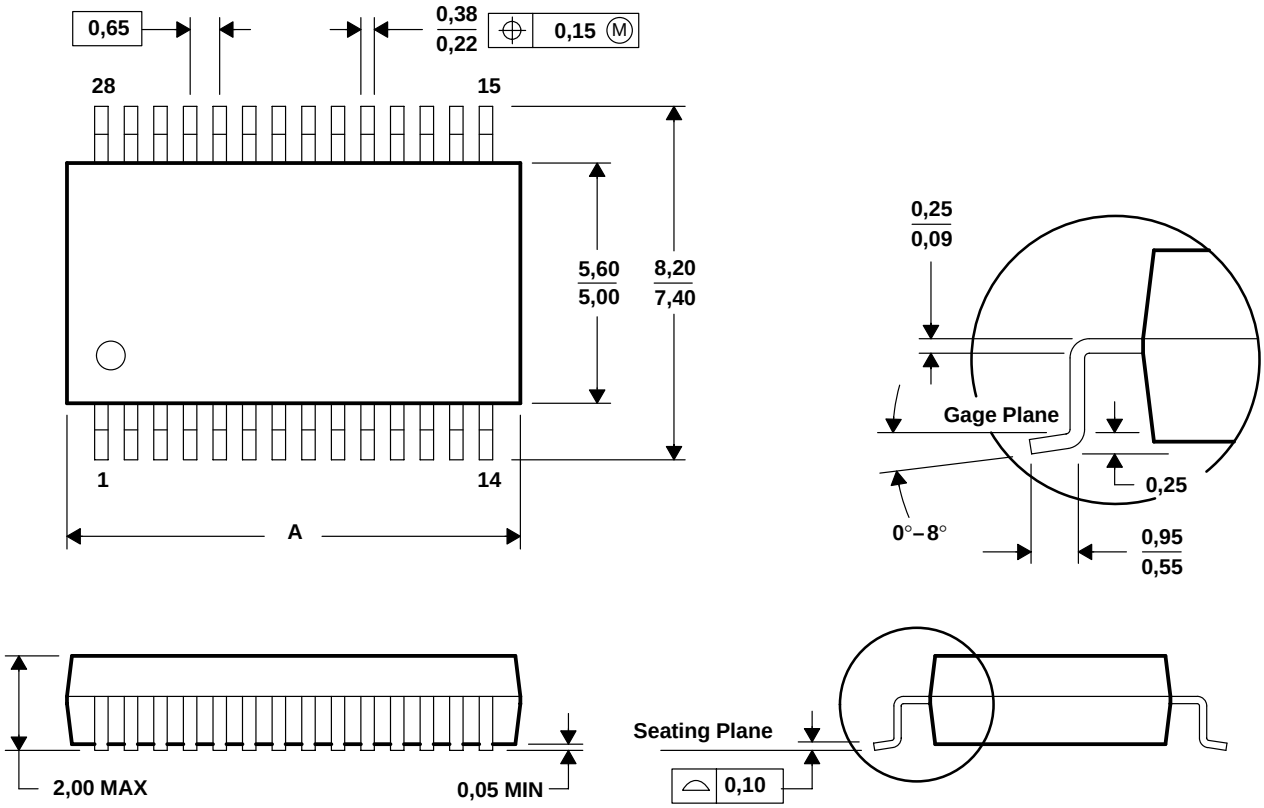


| DIM \ PINS ** | 14 | 16 | 20 | 24 | 28 | 30 | 38 |
|---|---|---|---|---|---|---|---|
| A MAX | 6,50 | 6,50 | 7,50 | 8,50 | 10,50 | 10,50 | 12,90 |
| A MIN | 5,90 | 5,90 | 6,90 | 7,90 | 9,90 | 9,90 | 12,30 |

**4040065 /E 12/01**

NOTES: A. All linear dimensions are in millimeters.
B. This drawing is subject to change without notice.
C. Body dimensions do not include mold flash or protrusion not to exceed 0,15.
D. Falls within JEDEC MO-150

## IMPORTANT NOTICE

Texas Instruments Incorporated and its subsidiaries (TI) reserve the right to make corrections, enhancements, improvements and other changes to its semiconductor products and services per JESD46, latest issue, and to discontinue any product or service per JESD48, latest issue. Buyers should obtain the latest relevant information before placing orders and should verify that such information is current and complete. All semiconductor products (also referred to herein as “components”) are sold subject to TI’s terms and conditions of sale supplied at the time of order acknowledgment.

TI warrants performance of its components to the specifications applicable at the time of sale, in accordance with the warranty in TI’s terms and conditions of sale of semiconductor products. Testing and other quality control techniques are used to the extent TI deems necessary to support this warranty. Except where mandated by applicable law, testing of all parameters of each component is not necessarily performed.

TI assumes no liability for applications assistance or the design of Buyers’ products. Buyers are responsible for their products and applications using TI components. To minimize the risks associated with Buyers’ products and applications, Buyers should provide adequate design and operating safeguards.

TI does not warrant or represent that any license, either express or implied, is granted under any patent right, copyright, mask work right, or other intellectual property right relating to any combination, machine, or process in which TI components or services are used. Information published by TI regarding third-party products or services does not constitute a license to use such products or services or a warranty or endorsement thereof. Use of such information may require a license from a third party under the patents or other intellectual property of the third party, or a license from TI under the patents or other intellectual property of TI.

Reproduction of significant portions of TI information in TI data books or data sheets is permissible only if reproduction is without alteration and is accompanied by all associated warranties, conditions, limitations, and notices. TI is not responsible or liable for such altered documentation. Information of third parties may be subject to additional restrictions.

Resale of TI components or services with statements different from or beyond the parameters stated by TI for that component or service voids all express and any implied warranties for the associated TI component or service and is an unfair and deceptive business practice. TI is not responsible or liable for any such statements.

Buyer acknowledges and agrees that it is solely responsible for compliance with all legal, regulatory and safety-related requirements concerning its products, and any use of TI components in its applications, notwithstanding any applications-related information or support that may be provided by TI. Buyer represents and agrees that it has all the necessary expertise to create and implement safeguards which anticipate dangerous consequences of failures, monitor failures and their consequences, lessen the likelihood of failures that might cause harm and take appropriate remedial actions. Buyer will fully indemnify TI and its representatives against any damages arising out of the use of any TI components in safety-critical applications.

In some cases, TI components may be promoted specifically to facilitate safety-related applications. With such components, TI’s goal is to help enable customers to design and create their own end-product solutions that meet applicable functional safety standards and requirements. Nonetheless, such components are subject to these terms.

No TI components are authorized for use in FDA Class III (or similar life-critical medical equipment) unless authorized officers of the parties have executed a special agreement specifically governing such use.

Only those TI components which TI has specifically designated as military grade or “enhanced plastic” are designed and intended for use in military/aerospace applications or environments. Buyer acknowledges and agrees that any military or aerospace use of TI components which have ***not*** been so designated is solely at the Buyer's risk, and that Buyer is solely responsible for compliance with all legal and regulatory requirements in connection with such use.

TI has specifically designated certain components as meeting ISO/TS16949 requirements, mainly for automotive use. In any case of use of non-designated products, TI will not be responsible for any failure to meet ISO/TS16949.

| **Products** | | **Applications** | |
|---|---|---|---|
| Audio | www.ti.com/audio | Automotive and Transportation | www.ti.com/automotive |
| Amplifiers | amplifier.ti.com | Communications and Telecom | www.ti.com/communications |
| Data Converters | dataconverter.ti.com | Computers and Peripherals | www.ti.com/computers |
| DLP® Products | www.dlp.com | Consumer Electronics | www.ti.com/consumer-apps |
| DSP | dsp.ti.com | Energy and Lighting | www.ti.com/energy |
| Clocks and Timers | www.ti.com/clocks | Industrial | www.ti.com/industrial |
| Interface | interface.ti.com | Medical | www.ti.com/medical |
| Logic | logic.ti.com | Security | www.ti.com/security |
| Power Mgmt | power.ti.com | Space, Avionics and Defense | www.ti.com/space-avionics-defense |
| Microcontrollers | microcontroller.ti.com | Video and Imaging | www.ti.com/video |
| RFID | www.ti-rfid.com | | |
| OMAP Applications Processors | www.ti.com/omap | **TI E2E Community** | e2e.ti.com |
| Wireless Connectivity | www.ti.com/wirelessconnectivity | | |

Mailing Address: Texas Instruments, Post Office Box 655303, Dallas, Texas 75265
Copyright © 2013, Texas Instruments Incorporated

Компания «ЭлектроПласт» предлагает заключение долгосрочных отношений при поставках импортных электронных компонентов на взаимовыгодных условиях!

Наши преимущества:

- Оперативные поставки широкого спектра электронных компонентов отечественного и импортного производства напрямую от производителей и с крупнейших мировых складов;
- Поставка более 17-ти миллионов наименований электронных компонентов;
- Поставка сложных, дефицитных, либо снятых с производства позиций;
- Оперативные сроки поставки под заказ (от 5 рабочих дней);
- Экспресс доставка в любую точку России;
- Техническая поддержка проекта, помощь в подборе аналогов, поставка прототипов;
- Система менеджмента качества сертифицирована по Международному стандарту ISO 9001;
- Лицензия ФСБ на осуществление работ с использованием сведений, составляющих государственную тайну;
- Поставка специализированных компонентов (Xilinx, Altera, Analog Devices, Intersil, Interpoint, Microsemi, Aeroflex, Peregrine, Syfer, Eurofarad, Texas Instrument, Miteq, Cobham, E2V, MA-COM, Hittite, Mini-Circuits,General Dynamics и др.);

Помимо этого, одним из направлений компании «ЭлектроПласт» является направление «Источники питания». Мы предлагаем Вам помощь Конструкторского отдела:

- Подбор оптимального решения, техническое обоснование при выборе компонента;
- Подбор аналогов;
- Консультации по применению компонента;
- Поставка образцов и прототипов;
- Техническая поддержка проекта;
- Защита от снятия компонента с производства.

**Как с нами связаться**

**Телефон:** 8 (812) 309 58 32 (многоканальный)
**Факс:** 8 (812) 320-02-42
**Электронная почта:** org@eplast1.ru
**Адрес:** 198099, г. Санкт-Петербург, ул. Калинина, дом 2, корпус 4, литера А.