EtronTech

EM637327

1Mega x 32 SGRAM

Preliminary (08/99)

Features

- Fast access time from clock: 4.5/5.5/5.5/6 ns
- Fast clock rate: 200/166/143/125 MHz
- Fully synchronous operation
- Internal pipelined architecture
- Dual internal banks (512K x 32bit x 2bank)
- Programmable Mode
  - CAS# Latency: 1, 2, or 3
  - Burst Length: 1, 2, 4, 8, or full page
  - Burst Type: interleaved or linear burst
  - Burst-Read-Single-Write
  - Load Color or Mask register
- Burst stop function
- Individual byte controlled by DQM0-3
- Block write and write-per-bit capability
- Auto Refresh and Self Refresh
- 2048 refresh cycles/32ms
- Single +3.3V ± 0.3V power supply
- Interface: LVTTL
- JEDEC 100-pin Plastic package
  - QFP (body thickness=2.8mm)
  - TQFP1.4 (body thickness=1.4mm)

Key Specifications

EM637327		- 5/6/7/8
t_{CK3}	Clock Cycle time(min.)	**5/6/7/8 ns**
t_{RAS}	Row Active time(max.)	**25/30/35/40 ns**
t_{AC3}	Access time from CLK(max.)	**4.5/5.5/5.5/6 ns**
t_{RC}	Row Cycle time(min.)	**55/60/63/72 ns**

Ordering Information

Part Number	Frequency	Package
EM637327Q-5	200 MHz	QFP
EM637327TQ-5	200 MHz	TQFP1.4
EM637327Q-6	166 MHz	QFP
EM637327TQ-6	166 MHz	TQFP1.4
EM637327Q-7	143 MHz	QFP
EM637327TQ-7	143 MHz	TQFP1.4
EM637327Q-8	125 MHz	QFP
EM637327TQ-8	125 MHz	TQFP1.4

Pin Assignment (Top View)

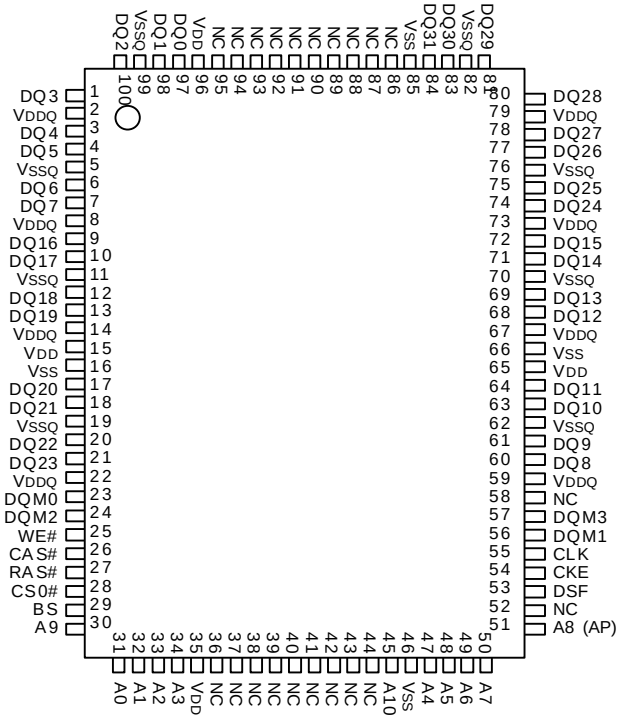

Overview

The EM637327 SGRAM is a high-speed CMOS synchronous graphics DRAM containing 32 Mbits. It is internally configured as a dual 512K x 32 DRAM with a synchronous interface (all signals are registered on the positive edge of the clock signal, CLK). Each of the 512K x 32 bit banks is organized as 2048 rows by 256 columns by 32 bits. Read and write accesses to the SGRAM are burst oriented; accesses start at a selected location and continue for a programmed number of locations in a programmed sequence. Accesses begin with the registration of a BankActivate command which is then followed by a Read or Write command.

The EM637327 provides for programmable Read or Write burst lengths of 1, 2, 4, 8, or full page, with a burst termination option. An auto precharge function may be enabled to provide a self-timed row precharge that is initiated at the end of the burst sequence. The refresh functions, either Auto or Self Refresh are easy to use.

By having a programmable mode register, the system can choose the most suitable modes to maximize its performance. These devices are well suited for applications requiring high memory bandwidth.

Etron Technology, Inc.

No. 6, Technology Rd. V, Science-Based Industrial Park, Hsinchu, Taiwan 30077, R.O.C

TEL: (886)-3-5782345 FAX: (886)-3-5778671

Etron Technology, Inc., reserves the right to make changes to its products and specifications without notice.

Block Diagram

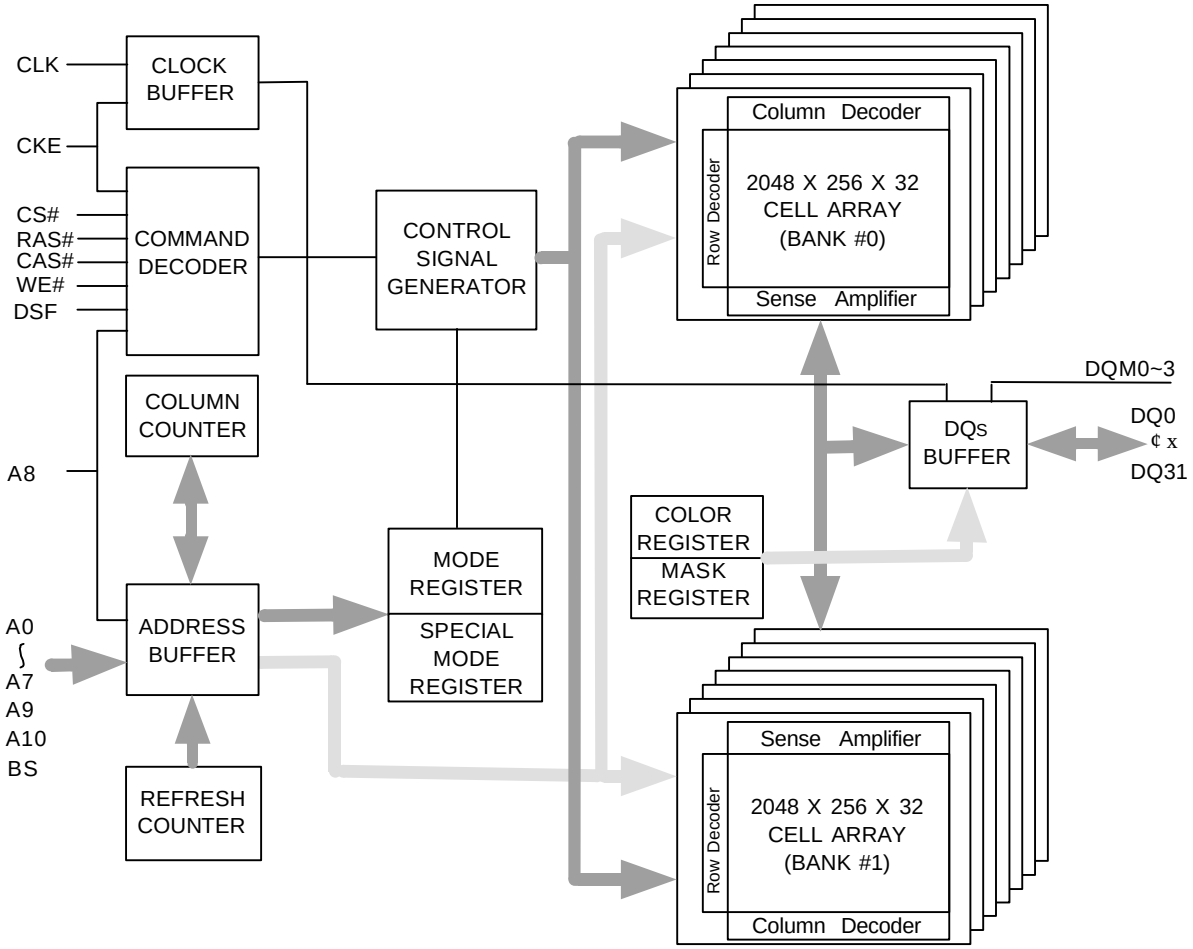

Pin Descriptions

Table 1. Pin Details of EM637327

Symbol	Type	Description
CLK	Input	**Clock:** CLK is driven by the system clock. All SGRAM input signals are sampled on the positive edge of CLK. CLK also increments the internal burst counter and controls the output registers.
CKE	Input	**Clock Enable:** CKE activates(HIGH) and deactivates(LOW) the CLK signal. If CKE goes low synchronously with clock(set-up and hold time same as other inputs), the internal clock is suspended from the next clock cycle and the state of output and burst address is frozen as long as the CKE remains low. When both banks are in the idle state, deactivating the clock controls the entry to the Power Down and Self Refresh modes. CKE is synchronous except after the device enters Power Down and Self Refresh modes, where CKE becomes asynchronous until exiting the same mode. The input buffers, including CLK, are disabled during Power Down and Self Refresh modes, providing low standby power.
BS	Input	**Bank Select:** BS defines to which bank the BankActivate, Read, Write, or BankPrecharge command is being applied. BS is also used to program the 11th bit of the Mode and Special Mode registers.
A0-A10	Input	**Address Inputs:** A0-A10 are sampled during the BankActivate command (row address A0-A10) and Read/Write command (column address A0-A7 with A8 defining Auto Precharge) to select one location out of the 512K available in the respective bank. During a Precharge command, A8 is sampled to determine if both banks are to be precharged (A8 = HIGH). The address inputs also provide the op-code during a Mode Register Set or Special Mode Register Set command.
CS#	Input	**Chip Select:** CS# enables (sampled LOW) and disables (sampled HIGH) the command decoder. All commands are masked when CS# is sampled HIGH. CS# provides for external bank selection on systems with multiple banks. It is considered part of the command code.
RAS#	Input	**Row Address Strobe:** The RAS# signal defines the operation commands in conjunction with the CAS# and WE# signals and is latched at the positive edges of CLK. When RAS# and CS# are asserted "LOW" and CAS# is asserted "HIGH," either the BankActivate command or the Precharge command is selected by the WE# signal. When the WE# is asserted "HIGH," the BankActivate command is selected and the bank designated by BS is turned on to the active state. When the WE# is asserted "LOW," the Precharge command is selected and the bank designated by BS is switched to the idle state after the precharge operation.
CAS#	Input	**Column Address Strobe:** The CAS# signal defines the operation commands in conjunction with the RAS# and WE# signals and is latched at the positive edges of CLK. When RAS# is held "HIGH" and CS# is asserted "LOW," the column access is started by asserting CAS# "LOW." Then, the Read or Write command is selected by asserting WE# "LOW" or "HIGH."
WE#	Input	**Write Enable:** The WE# signal defines the operation commands in conjunction with the RAS# and CAS# signals and is latched at the positive edges of CLK. The WE# input is used to select the BankActivate or Precharge command and Read or Write command.
DSF	Input	**Define Special Function:** The DSF signal defines the operation commands in conjunction with the RAS# and CAS# and WE# signals and is latched at the positive edges of CLK. The DSF input is used to select the masked write disable/enable command and block write command, and the Special Mode Register Set cycle.

DQM0 - DQM3	Input	**Data Input/Output Mask:** DQM0-DQM3 are byte specific, nonpersistent I/O buffer controls. The I/O buffers are placed in a high-z state when DQM is sampled HIGH. Input data is masked when DQM is sampled HIGH during a write cycle. Output data is masked (two-clock latency) when DQM is sampled HIGH during a read cycle. DQM3 masks DQ31-DQ24, DQM2 masks DQ23-DQ16, DQM1 masks DQ15-DQ8, and DQM0 masks DQ7-DQ0.
DQ0-DQ31	Input/ Output	**Data I/O:** The DQ0-31 input and output data are synchronized with the positive edges of CLK. The I/Os are byte-maskable during Reads and Writes. The DQs also serve as column/byte mask inputs during Block Writes.
NC	-	**No Connect:** These pins should be left unconnected.
V_{DDQ}	Supply	**DQ Power:** Provide isolated power to DQs for improved noise immunity.
V_{SSQ}	Supply	**DQ Ground:** Provide isolated ground to DQs for improved noise immunity.
V_{DD}	Supply	**Power Supply:** +3.3V±0.3V
V_{SS}	Supply	**Ground**

Operation Mode

Fully synchronous operations are performed to latch the commands at the positive edges of CLK. Table 2 shows the truth table for the operation commands.

Table 2. Truth Table (Note (1), (2))

Command	State	CKE_{n-1}	CKE_n	DQM(7)	BS	A8	ADDR	CS#	RAS#	CAS#	WE#	DSF
BankActivate & Masked Write Disable	Idle(3)	H	X	X	V	V	V	L	L	H	H	L
BankActivate & Masked Write Enable	Idle(3)	H	X	X	V	V	V	L	L	H	H	H
BankPrecharge	Any	H	X	X	V	L	X	L	L	H	L	L
PrechargeAll	Any	H	X	X	X	H	X	L	L	H	L	L
Write	Active(3)	H	X	X	V	L	V	L	H	L	L	L
Block Write Command	Active(3)	H	X	X	V	L	V	L	H	L	L	H
Write and AutoPrecharge	Active(3)	H	X	X	V	H	V	L	H	L	L	L
Block Write and AutoPrecharge	Active(3)	H	X	X	V	H	V	L	H	L	L	H
Read	Active(3)	H	X	X	V	L	V	L	H	L	H	L
Read and Autoprecharge	Active(3)	H	X	X	V	H	V	L	H	L	H	L
Mode Register Set	Idle	H	X	X	V	L	V	L	L	L	L	L
Special Mode Register Set	Idle(5)	H	X	X	X	X	V	L	L	L	L	H
No-Operation	Any	H	X	X	X	X	X	L	H	H	H	X
Burst Stop	Active(4)	H	X	X	X	X	X	L	H	H	L	L
Device Deselect	Any	H	X	X	X	X	X	H	X	X	X	X
AutoRefresh	Idle	H	H	X	X	X	X	L	L	L	H	L
SelfRefresh Entry	Idle	H	L	X	X	X	X	L	L	L	H	L
SelfRefresh Exit	Idle	L	H	X	X	X	X	H	X	X	X	X
	(SelfRefresh)							L	H	H	H	X
Clock Suspend Mode Entry	Active	H	L	X	X	X	X	X	X	X	X	X
Power Down Mode Entry	Any(6)	H	L	X	X	X	X	H	X	X	X	X
								L	H	H	H	L
Clock Suspend Mode Exit	Active	L	H	X	X	X	X	X	X	X	X	X
Power Down Mode Exit	Any	L	H	X	X	X	X	H	X	X	X	X
	(PowerDown)							L	H	H	H	L
Data Write/Output Enable	Active	H	X	L	X	X	X	X	X	X	X	X
Data Mask/Output Disable	Active	H	X	H	X	X	X	X	X	X	X	X

Note: 1. V=Valid X=Don't Care L=Low level H=High level
2. CKE_n signal is input level when commands are provided.
CKE_{n-1} signal is input level one clock cycle before the commands are provided.
3. These are states of bank designated by BS signal.
4. Device state is 1, 2, 4, 8, and full page burst operation.
5. The Special Mode Register Set is also available in Row Active State.
6. Power Down Mode can not enter in the burst operation.
When this command is asserted in the burst cycle, device state is clock suspend mode.
7. DQM0-3

Commands

1 BankActivate & Masked Write Disable command

(RAS# = "L", CAS# = "H", WE# = "H", DSF = "L", BS = Bank, A0-A10 = Row Address)

The BankActivate command activates the idle bank designated by the BS (Bank Select) signal. By latching the row address on A0 to A9 at the time of this command, the selected row access is initiated. The read or write operation in the same bank can occur after a time delay of t_{RCD}(min.) from the time of bank activation. A subsequent BankActivate command to a different row in the same bank can only be issued after the previous active row has been precharged (refer to the following figure). The minimum time interval between successive BankActivate commands to the same bank is defined by t_{RC}(min.). The SGRAM has two internal banks on the same chip and shares part of the internal circuitry to reduce chip area; therefore it restricts the back-to-back activation of both banks. t_{RRD}(min.) specifies the minimum time required between activating different banks. After this command is used, the Write command and the Block Write command perform the no mask write operation.

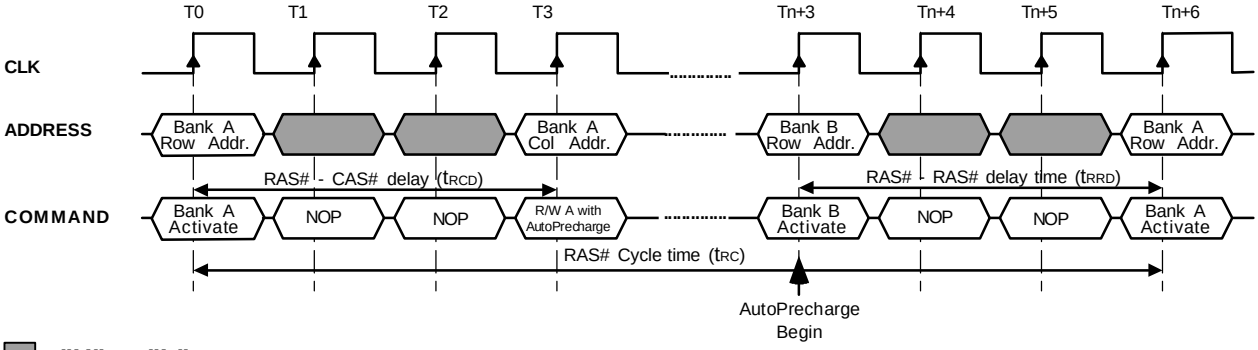

: "H" or "L"

BankActivate Command Cycle (Burst Length = n, CAS# Latency = 3)

2 BankActivate & Masked Write Enable command (refer to the above figure)

(RAS# = "L", CAS# = "H", WE# = "H", DSF = "H", BS = Bank, A0-A10 = Row Address)

The BankActivate command activates the idle bank designated by BS signal. After this command is performed, the Write command and the Block Write command perform the masked write operation. In the masked write and the masked block write functions, the I/O mask data that was stored in the write mask register is used.

3 BankPrecharge command

(RAS# = "L", CAS# = "H", WE# = "L", DSF = "L", BS = Bank, A8 = "L", A0-A7, A9-A10 = Don't care)

The BankPrecharge command precharges the bank disignated by BS signal. The precharged bank is switched from the active state to the idle state. This command can be asserted anytime after t_{RAS}(min.) is satisfied from the BankActivate command in the desired bank. The maximum time any bank can be active is specified by t_{RAS}(max.). Therefore, the precharge function must be performed in any active bank within t_{RAS}(max.). At the end of precharge, the precharged bank is still in the idle state and is ready to be activated again.

4 PrechargeAll command

(RAS# = "L", CAS# = "H", WE# = "L", DSF = "L", BS = Don't care, A8 = "L", A0-A7, A9-A10 = Don't care)The PrechargeAll command precharges both banks simultaneously and can be issued even if both banks are not in the active state. Both banks are then switched to the idle state.

5 Read command

(RAS# = "H", CAS# = "L", WE# = "H", DSF = "L", BS = Bank, A8 = "L", A0-A7 = Column Address)

The Read command is used to read a burst of data on consecutive clock cycles from an active row in an active bank. The bank must be active for at least t_{RCD}(min.) before the Read command is issued. During read bursts, the valid data-out element from the starting column address will be available following the CAS# latency after the issue of the Read command. Each subsequent data-out element will be valid by the next positive clock edge (refer to the following figure). The DQs go

into high-impedance at the end of the burst unless other command is initiated. The burst length, burst sequence, and CAS# latency are determined by the mode register, which is already programmed. A full-page burst will continue until terminated (at the end of the page it will wrap to column 0 and continue).

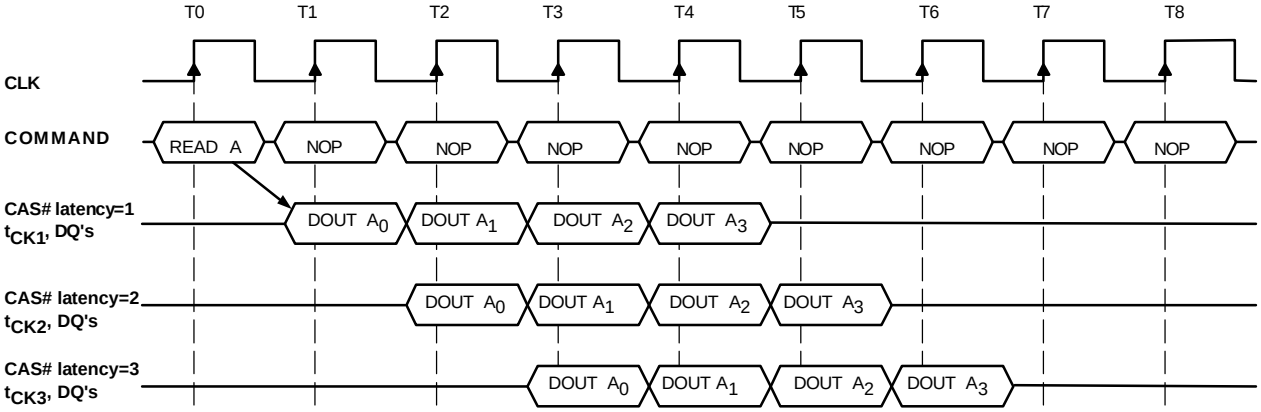

Burst Read Operation(Burst Length = 4, CAS# Latency = 1, 2, 3)

The read data appears on the DQs subject to the values on the DQM inputs two clocks earlier (i.e. DQM latency is two clocks for output buffers). A read burst without the auto precharge function may be interrupted by a subsequent Read or Write/Block Write command to the same bank or the other active bank before the end of the burst length. It may be interrupted by a BankPrecharge/ PrechargeAll command to the same bank too. The interrupt coming from the Read command can occur on any clock cycle following a previous Read command (refer to the following figure).

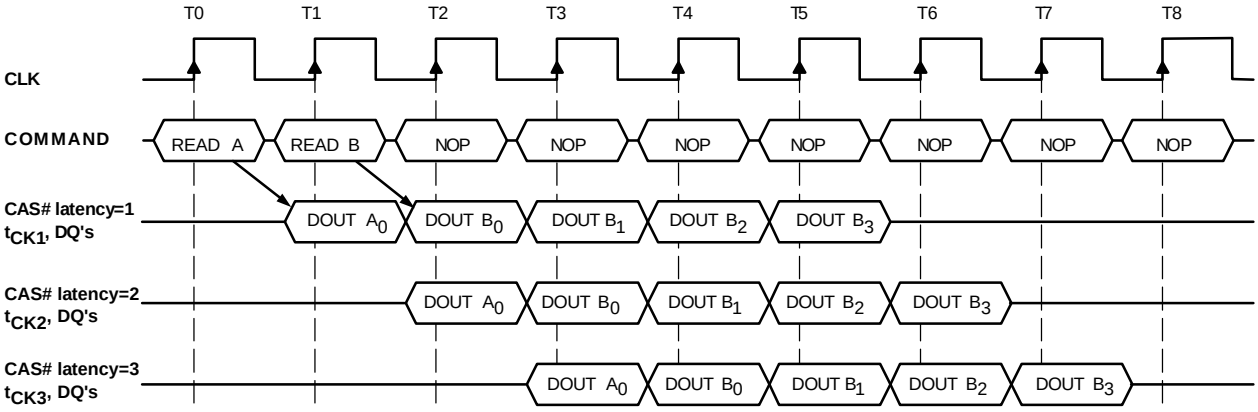

Read Interrupted by a Read (Burst Length = 4, CAS# Latency = 1, 2, 3)

The DQM inputs are used to avoid I/O contention on the DQ pins when the interrupt comes from a Write/Block Write command. The DQMs must be asserted (HIGH) at least two clocks prior to the Write/Block Write command to suppress data-out on the DQ pins. To guarantee the DQ pins against I/O contention, a single cycle with high-impedance on the DQ pins must occur between the last read data and the Write/Block Write command (refer to the following three figures). If the data output of the burst read occurs at the second clock of the burst write, the DQMs must be asserted (HIGH) at least one clock prior to the Write/Block Write command to avoid internal bus contention.

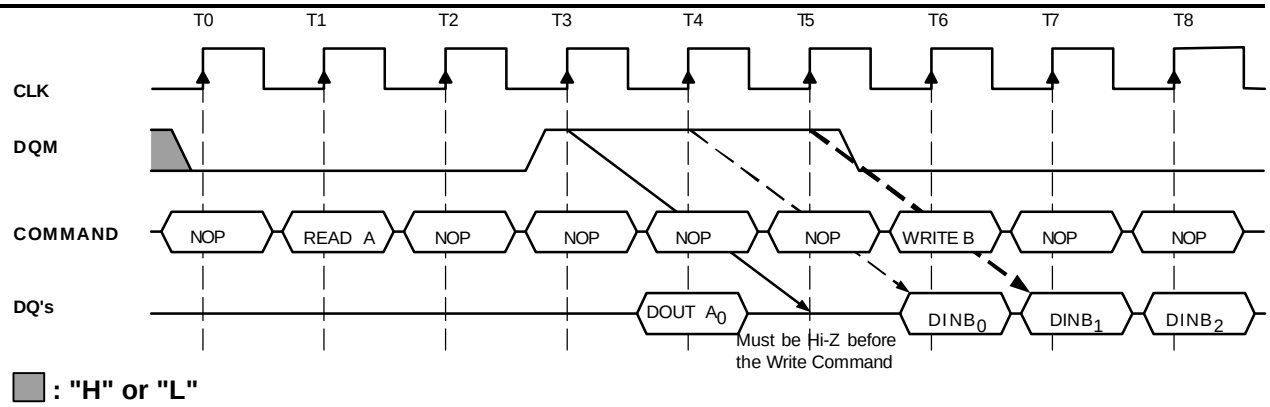

Read to Write Interval (Burst Length ³ 4, CAS# Latency = 3)

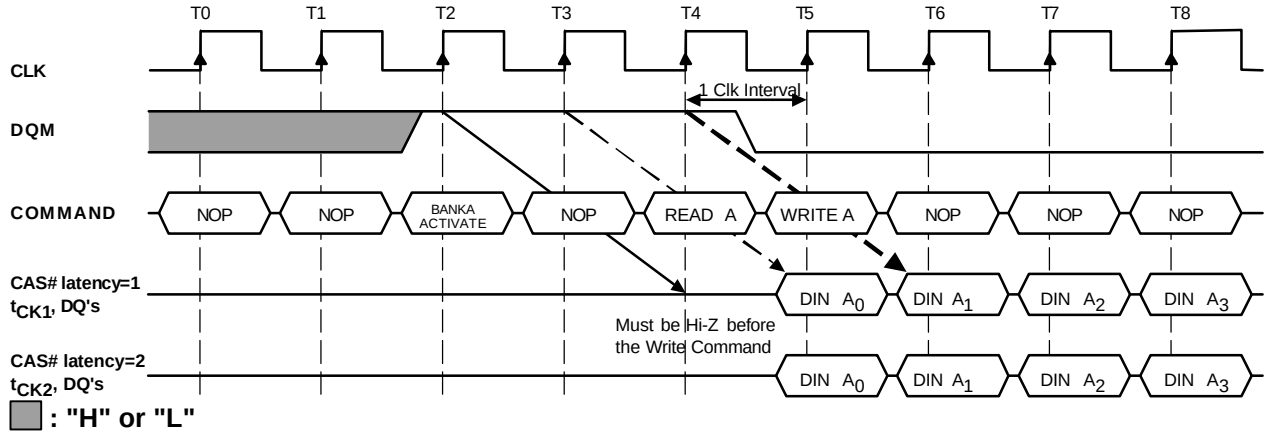

Read to Write Interval (Burst Length ³ 4, CAS# Latency = 1, 2)

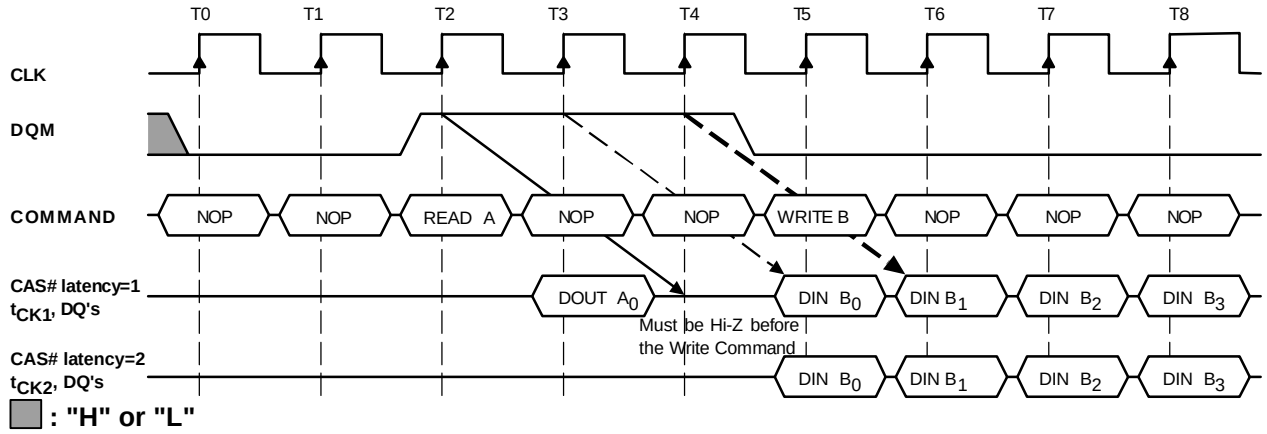

Read to Write Interval (Burst Length ³ 4, CAS# Latency = 1, 2)

A read burst without the auto precharge function may be interrupted by a BankPrecharge/ PrechargeAll command to the same bank. The following figure shows the optimum time that BankPrecharge/ PrechargeAll command is issued in different CAS# latency.

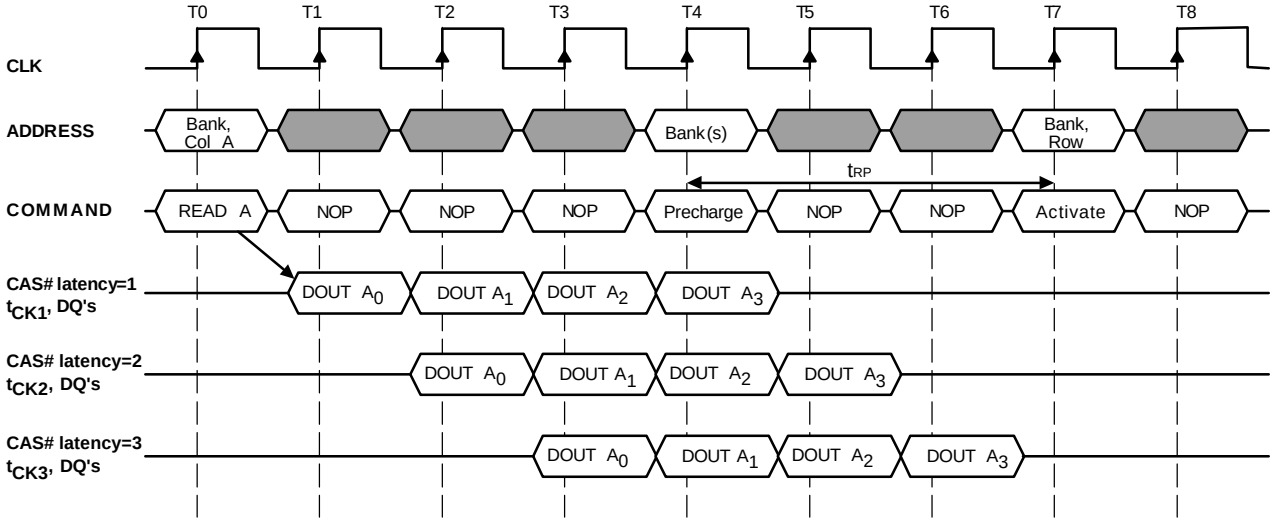

Read to Precharge (CAS# Latency = 1, 2, 3)

6 Read and AutoPrecharge command

(RAS# = "H", CAS# = "L", WE# = "H", DSF = "L", BS = Bank, A8 = "H", A0-A7 = Column Address)

The Read and AutoPrecharge command automatically performs the precharge operation after the read operation. Once this command is given, any subsequent command cannot occur within a time delay of {t_{RP}(min.) + burst length}. At full-page burst, only the read operation is performed in this command and the auto precharge function is ignored.

7 Write command

(RAS# = "H", CAS# = "L", WE# = "L", DSF = "L", BS = Bank, A8 = "L", A0-A7 = Column Address)

The Write command is used to write a burst of data on consecutive clock cycles from an active row in an active bank. The bank must be active for at least t_{RCD}(min.) before the Write command is issued. During write bursts, the first valid data-in element will be registered coincident with the Write command. Subsequent data elements will be registered on each successive positive clock edge (refer to the following figure). The DQs remain with high-impedance at the end of the burst unless another command is initiated. The burst length and burst sequence are determined by the mode register, which is already programmed. A full-page burst will continue until terminated (at the end of the page it will wrap to column 0 and continue).

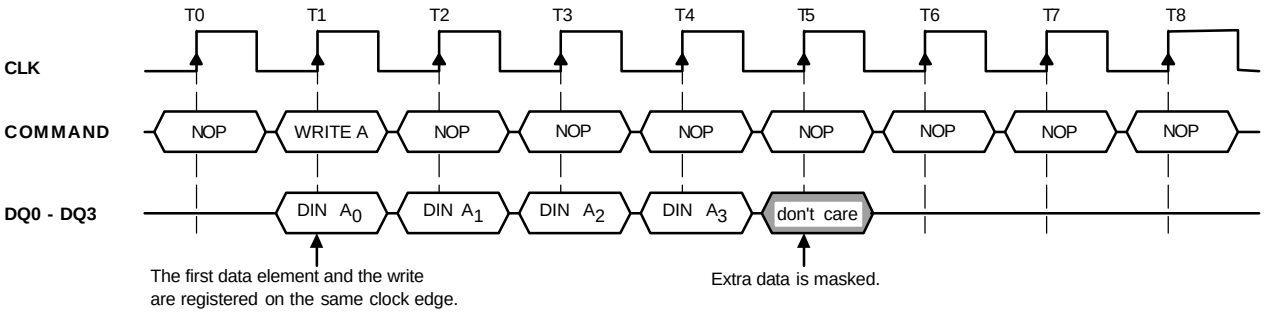

Burst Write Operation (Burst Length = 4, CAS# Latency = 1, 2, 3)

Any Write performed to a row that was opened via an BankActivate & Masked Write Enable command is a masked write (Write-Per-Bit). Data is written to the 32 cells (bits) at the selected column location subject to the data stored in the Mask register. The overall mask consists of the DQM inputs, which mask on a per-byte basis, and the Mask register, which masks also on a per-bit basis. This is shown in the following block diagram.

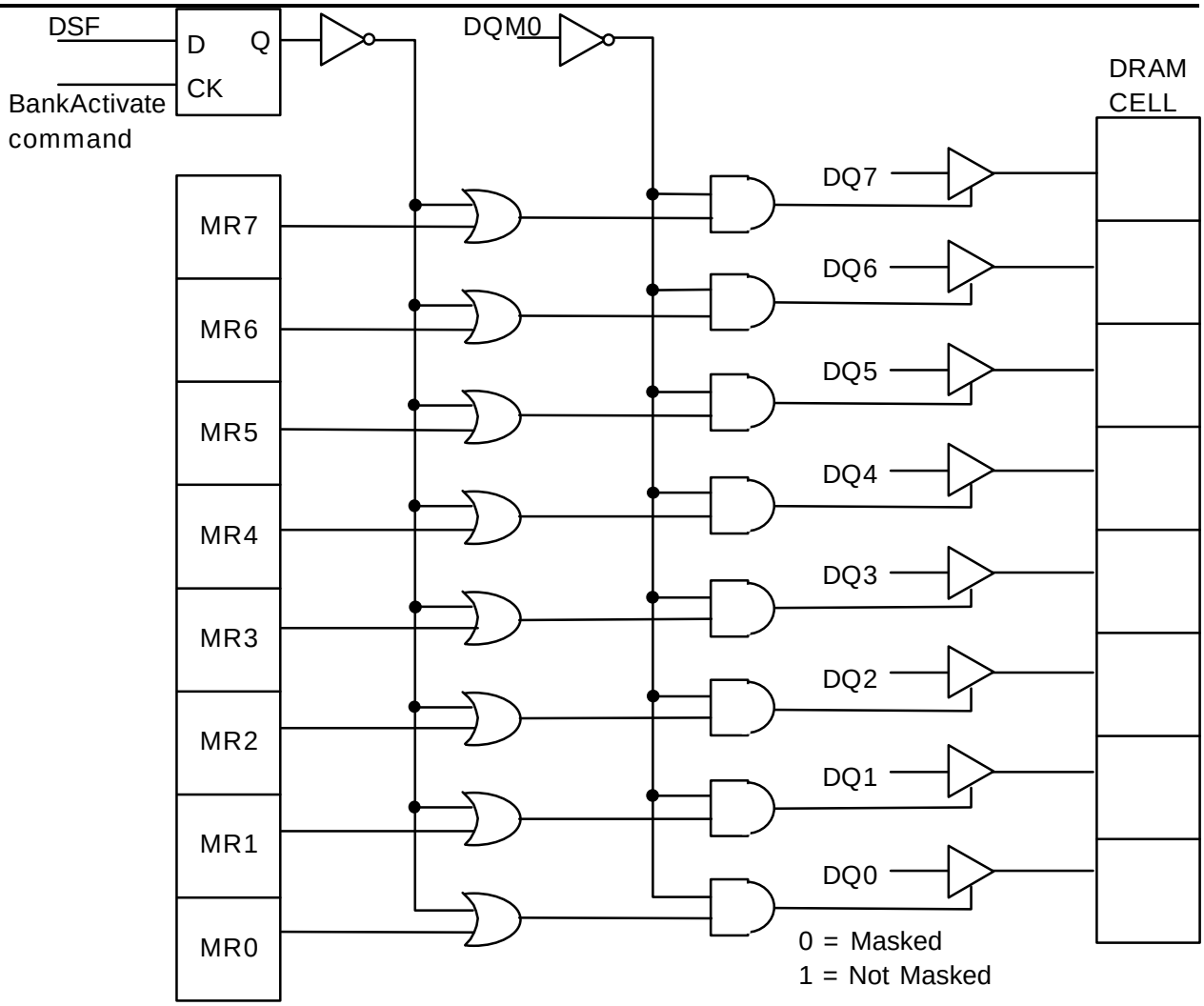

Note: Only the lower byte is shown. The operation is identical for other bytes.

Write Per Bit (I/O Mask) Block Diagram

A write burst without the auto precharge function may be interrupted by a subsequent Write/Block Write, BankPrecharge/PrechargeAll, or Read command before the end of the burst length. An interrupt coming from Write/Block Write command can occur on any clock cycle following the previous Write command (refer to the following figure).

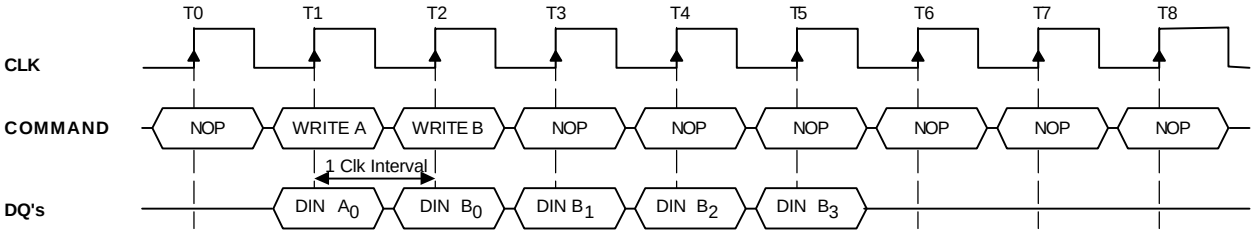

Write Interrupted by a Write (Burst Length = 4, CAS# Latency = 1, 2, 3)

The Read command that interrupts a write burst without auto precharge function should be issued one cycle after the clock edge in which the last data-in element is registered. In order to avoid data contention, input data must be removed from the DQs at least one clock cycle before the

first read data appears on the outputs (refer to the following figure). Once the Read command is registered, the data inputs will be ignored and writes will not be executed.

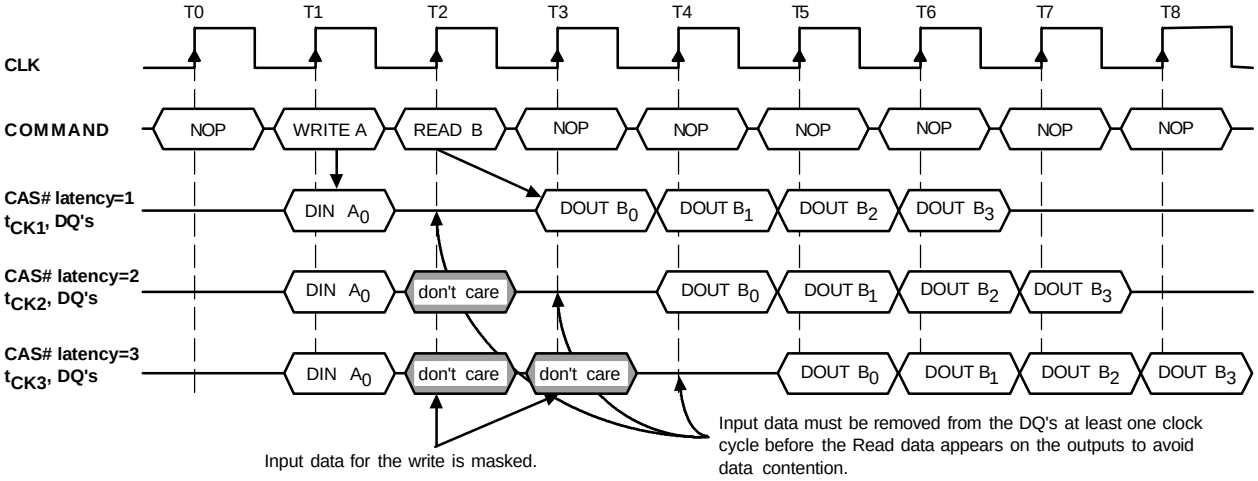

Write Interrupted by a Read (Burst Length = 4, CAS# Latency = 1, 2, 3)

The BankPrecharge/PrechargeAll command that interrupts a write burst without the auto precharge function should be issued *m* cycles after the clock edge in which the last data-in element is registered, where *m* equals t_{WR}/t_{CK} rounded up to the next whole number. In addition, the DQM signals must be used to mask input data, starting with the clock edge following the last data-in element and ending with the clock edge on which the BankPrecharge/PrechargeAll command is entered (refer to the following figure).

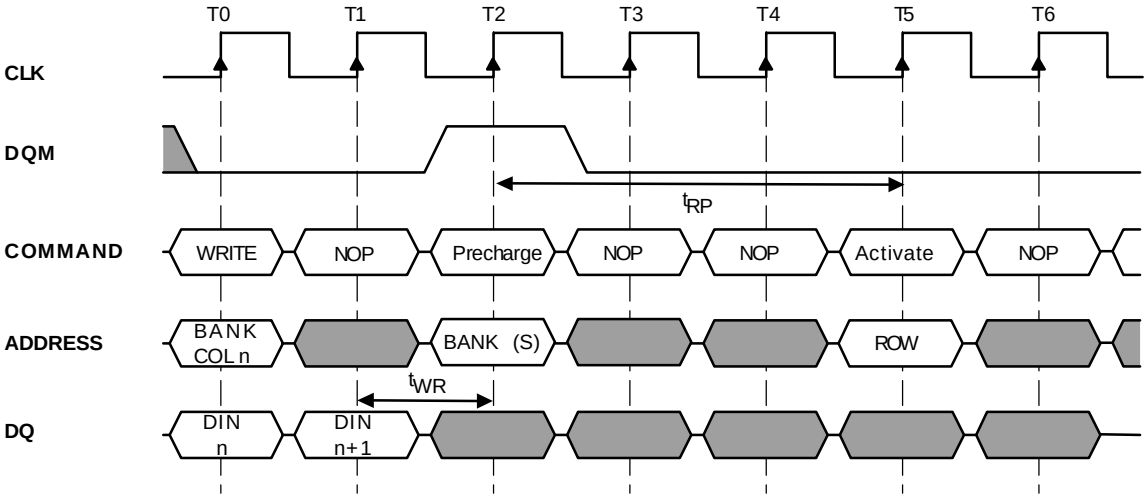

: don't care

Note: The DQMs can remain low in this example if the length of the write burst is 1 or 2.

Write to Precharge

When the Burst-Read-Single-Write mode is selected, the write burst length is 1 regardless of the read burst length (refer to Figures 21 and 22 in Timing Waveforms).

8 Block Write command

(RAS# = "H", CAS# = "L", WE# = "L", DSF = "H", BS = Bank, A8 = "L", A3-A7 = Column Address, DQ0-DQ31 = Column Mask)

The block writes are non-burst accesses that write to eight column locations simultaneously. A single data value, which was previously loaded in the Color register, is written to the block of eight consecutive column locations addressed by inputs A3~A7. The information on the DQs which are

registered coincident with the Block Write command is used to mask specific column/byte combinations within the block. The mapping of the DQ inputs to the column/byte combinations is shown in following table.

The overall Block Write mask consists of a combination of the DQM inputs, the Mask register, and the column/byte mask information, as shown in the following figure. The DQM and Mask register masking operates normally as for a Write command, with the exception that the mask information is applied simultaneously to all eight columns. Therefore, in a Block Write, a given bit is written only if a "0" is registered for the corresponding DQM input, a "1" is registered for the corresponding DQ signal, and the corresponding bit in the Mask register is "1".

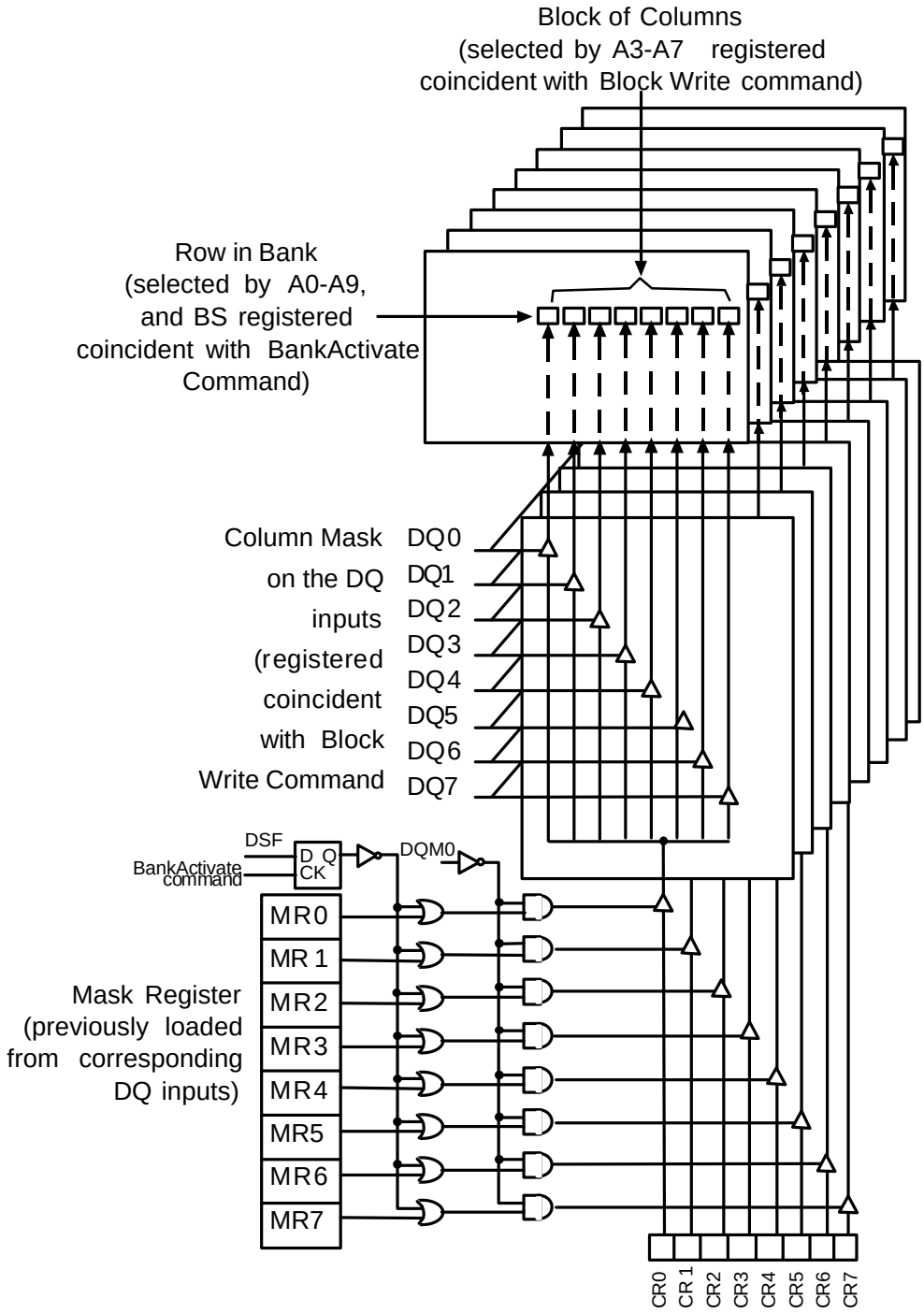

Note: Only the lower byte is shown. The operation is identical for other bytes.

Block-Write Masking Block Diagram

DQ Inputs	Column Address A2	A1	A0	DQ Planes Controlled		DQ Inputs	Column Address A2	A1	A0	DQ Planes Controlled
DQ0	0	0	0	0~7		DQ16	0	0	0	16~23
DQ1	0	0	1	0~7		DQ17	0	0	1	16~23
DQ2	0	1	0	0~7		DQ18	0	1	0	16~23
DQ3	0	1	1	0~7		DQ19	0	1	1	16~23
DQ4	1	0	0	0~7		DQ20	1	0	0	16~23
DQ5	1	0	1	0~7		DQ21	1	0	1	16~23
DQ6	1	1	0	0~7		DQ22	1	1	0	16~23
DQ7	1	1	1	0~7		DQ23	1	1	1	16~23
DQ8	0	0	0	8~15		DQ24	0	0	0	24~31
DQ9	0	0	1	8~15		DQ25	0	0	1	24~31
DQ10	0	1	0	8~15		DQ26	0	1	0	24~31
DQ11	0	1	1	8~15		DQ27	0	1	1	24~31
DQ12	1	0	0	8~15		DQ28	1	0	0	24~31
DQ13	1	0	1	8~15		DQ29	1	0	1	24~31
DQ14	1	1	0	8~15		DQ30	1	1	0	24~31
DQ15	1	1	1	8~15		DQ31	1	1	1	24~31

A block write access requires a time period of t_{BWC} to execute, so in general, there should be *m* NOP cycles(*m* equals (t_{BWC} - t_{CK})/t_{CK} rounded up to the next whole number), after the Block Write command. However, BankActivate or BankPrecharge commands to the other bank are allowed. When following a Block Write with a BankPrecharge or PrechargeAll command to the same bank, t_{BPL} must be met.

9 Write and AutoPrecharge command (refer to the following figure)

(RAS# = "H", CAS# = "L", WE# = "L", DSF = "L", BS = Bank, A8 = "H", A0-A7 = Column Address)

The Write and AutoPrecharge command performs the precharge operation automatically after the write operation. Once this command is given, any subsequent command can not occur within a time delay of {(burst length -1) + t_{WR} + t_{RP}(min.)}. At full-page burst, only the write operation is performed in this command and the auto precharge function is ignored.

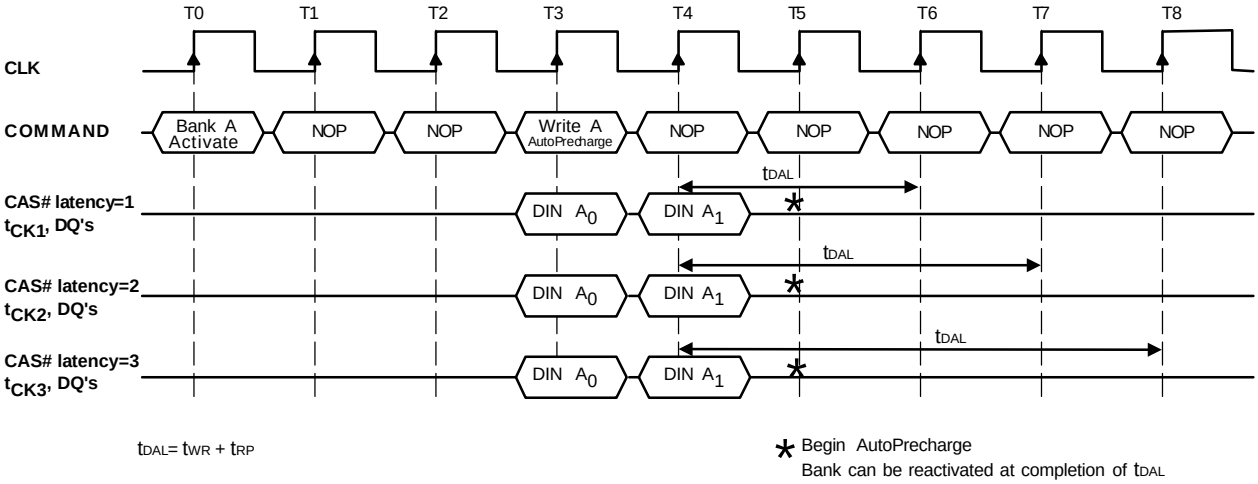

Burst Write with Auto-Precharge (Burst Length = 2, CAS# Latency = 1, 2, 3)

10 Block Write and AutoPrecharge command

(RAS# = "H", CAS# = "L", WE# = "H", DSF = "H", BS = Bank, A8 = "H", A3-A7 = Column Address, DQ0-DQ31 = Column Mask)

The Block Write and AutoPrecharge command performs the precharge operation automatically after the block write operation. Once this command is given, any subsequent command can not occur within a time delay of {t_{BPL} + t_{RP}(min.)}.

11 Mode Register Set command

(RAS# = "L", CAS# = "L", WE# = "L", DSF = "L", BS, A0-A9 = Register Data)

The mode register stores the data for controlling the various operating modes of SGRAM. The Mode Register Set command programs the values of CAS# latency, Addressing Mode and Burst Length in the Mode register to make SGRAM useful for a variety of different applications. The default values of the Mode Register after power-up are undefined; therefore this command must be issued at the power-up sequence. The state of pins A0~A8 and BS in the same cycle is the data written to the mode register. One clock cycle is required to complete the write in the mode register (refer to the following figure). The contents of the mode register can be changed using the same command and the clock cycle requirements during operation as long as both banks are in the idle state.

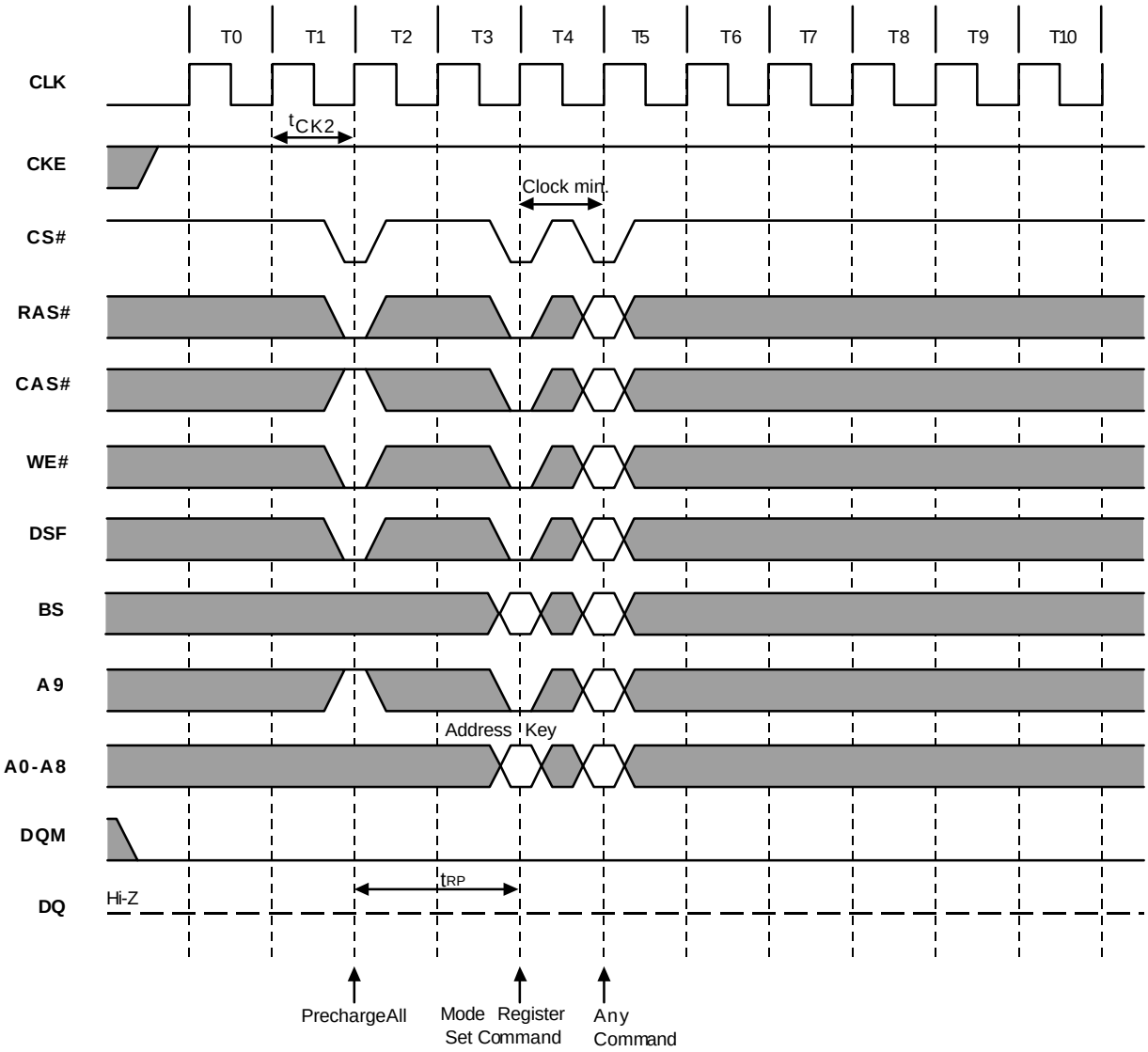

Mode Register Set Cycle (CAS# Latency = 1, 2, 3)

The mode register is divided into various fields depending on functionality.

- Burst Length Field (A2~A0)

  This field specifies the data length of column access using the A2~A0 pins and selects the Burst Length to be 1, 2, 4, 8, or full page.

A2	A1	A0	Burst Length
0	0	0	1
0	0	1	2
0	1	0	4
0	1	1	8
1	0	0	Reserved
1	0	1	Reserved
1	1	0	Reserved
1	1	1	Full Page

- Addressing Mode Select Field (A3)

  The Addressing Mode can be one of two modes, Interleave Mode or Sequential Mode. Sequential Mode supports burst length of 1, 2, 4, 8, or full page, but Interleave Mode only supports burst length of 4 and 8.

A3	Addressing Mode
0	Sequential
1	Interleave

--- Addressing Sequence of Sequential Mode

An internal column address is performed by increasing the address from the column address which is input to the device. The internal column address is varied by the Burst Length as shown in the following table. When the value of column address, (n + m), in the table is larger than 255, only the least significant 8 bits are effective.

Data n	0	1	2	3	4	5	6	7	-	255	256	257	-
Column Address	n	n+1	n+2	n+3	n+4	n+5	n+6	n+7	-	n+255	n	n+1	-
Burst Length	2 words:												
	4 words:												
	8 words:												
	Full Page: Column address is repeated until terminated.												

--- Addressing Sequence of Interleave Mode

A column access is started in the input column address and is performed by inverting the address bits in the sequence shown in the following table.

Data n	Column Address								Burst Length	
Data 0	A7	A6	A5	A4	A3	A2	A1	A0	4 words	8 words
Data 1	A7	A6	A5	A4	A3	A2	A1	A0#		
Data 2	A7	A6	A5	A4	A3	A2	A1#	A0		
Data 3	A7	A6	A5	A4	A3	A2	A1#	A0#		
Data 4	A7	A6	A5	A4	A3	A2#	A1	A0		
Data 5	A7	A6	A5	A4	A3	A2#	A1	A0#		
Data 6	A7	A6	A5	A4	A3	A2#	A1#	A0		
Data 7	A7	A6	A5	A4	A3	A2#	A1#	A0#		

- CAS# Latency Field (A6~A4)

  This field specifies the number of clock cycles from the assertion of the Read command to the first read data. The minimum whole value of CAS# Latency depends on the frequency of CLK. The minimum whole value satisfying the following formula must be programmed into this field. $t_{CAC}(min) \leq$ CAS# Latency X t_{CK}

A6	A5	A4	CAS# Latency
0	0	0	Reserved
0	0	1	1 clock
0	1	0	2 clocks
0	1	1	3 clocks
1	X	X	Reserved

- Test Mode field (A8~A7)

  These two bits are used to enter the test mode and must be programmed to "00" in normal operation.

A8	A7	Test Mode
0	0	normal mode
0	1	Vendor Use Only
1	X	Vendor Use Only

- Single Write Mode (A9)

  This bit is used to select the write mode. When the A9 bit is "0", the Burst-Read-Burst-Write mode is selected. When the A9 bit is "1", the Burst-Read-Single-Write mode is selected.

A9	Single Write Mode
0	Burst-Read-Burst-Write
1	Burst-Read-Single-Write

12 Special Mode Register Set command

(RAS# = "L", CAS# = "L", WE# = "L", DSF = "H", BS, A0-A9 = Register Data)

The special mode register is used to load the Color and Mask registers, which are used in Block Write and masked Write cycles. The control information being written to the Special Mode register is applied to the address inputs and the data to be written to either the Color register or the Mask register is applied to the DQs. When A6 is "HIGH" during a Special Mode Register Set cycle, the Color register will be loaded with the data on the DQs. Similarly, when A5 is "HIGH" during a Special Mode Register Set cycle, the Mask register will be loaded with the data on the DQs. A6=A5=1 in the Special Mode Register Set cycle is illegal.

Functions	BS	A9 ~ A7	A6	A5	A4 ~ A0
Leave Unchanged	X	X	0	0	X
Load Mask Register	X	X	0	1	X
Load Color Register	X	X	1	0	X
Illegal	X	X	1	1	X

One clock cycle is required to complete the write in the Special Mode register. This command can be issued during the active state. As in a write operation, this command accepts the data needed through DQ pins. Therefore, it should be attended not to induce bus contention.

13 No-Operation command

(RAS# = "H", CAS# = "H", WE# = "H")

The No-Operation command is used to perform a NOP to the SGRAM which is selected (CS# is Low). This prevents unwanted commands from being registered during idle or wait states.

14 Burst Stop command

(RAS# = "H", CAS# = "H", WE# = "L", DSF = "L")

The Burst Stop command is used to terminate either fixed-length or full-page bursts. This command is only effective in a read/write burst without the auto precharge function. The terminated read burst ends after a delay equal to the CAS# latency (refer to the following figure). The termination of a write burst is shown in the following figure.

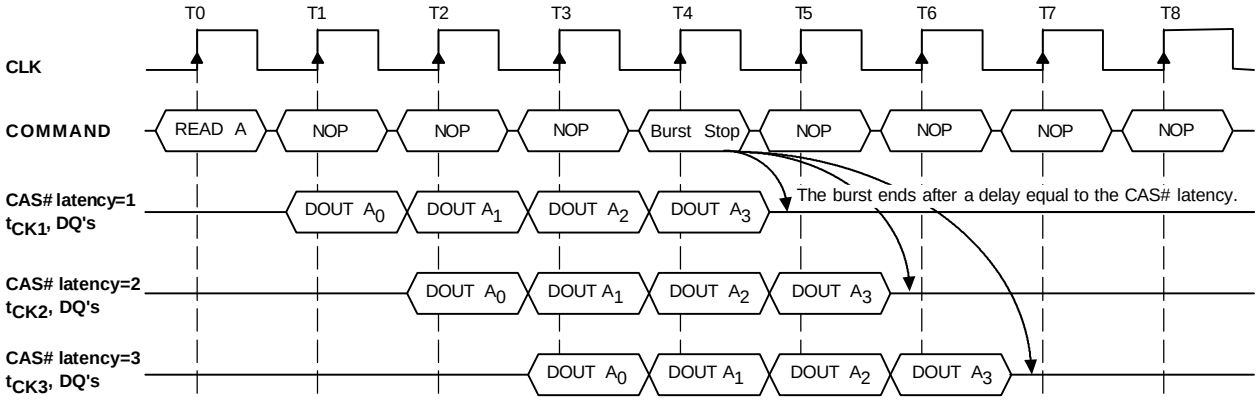

Termination of a Burst Read Operation (Burst Length > 4, CAS# Latency = 1, 2, 3)

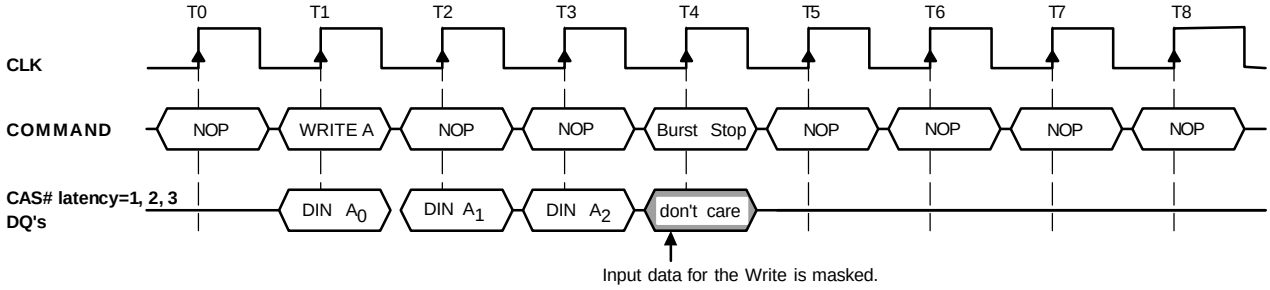

Termination of a Burst Write Operation (Burst Length = X, CAS# Latency = 1, 2, 3)

15 Device Deselect command

(CS# = "H")

The Device Deselect command disables the command decoder so that the RAS#, CAS#, WE# and Address inputs are ignored, regardless of whether the CLK is enabled. This command is similar to the No Operation command.

16 AutoRefresh command (refer to Figures 3 & 4 in Timing Waveforms)

(RAS# = "L", CAS# = "L", WE# = "H", DSF = "L", CKE = "H", BS, A0-A9 = Don't care)

The AutoRefresh command is used during normal operation of the SGRAM and is analogous to CAS#-before-RAS# (CBR) Refresh in conventional DRAMs. This command is non-persistent, so it must be issued each time a refresh is required. The addressing is generated by the internal refresh controller. This makes the address bits a "don't care" during an AutoRefresh command. The internal refresh counter increments automatically on every auto refresh cycle to all of the rows. The refresh operation must be performed 2048 times within 32ms. The time required to complete the auto refresh operation is specified by t_{RC}(min.). To provide the AutoRefresh command, both banks need to be in the idle state and the device must not be in power down mode (CKE is high in the previous cycle). This command must be followed by NOPs until the auto refresh operation is completed. The precharge time requirement, t_{RP}(min), must be met before successive auto refresh operations are performed.

17 SelfRefresh Entry command (refer to Figure 5 in Timing Waveforms)

(RAS# = "L", CAS# = "L", WE# = "H", DSF = "L", CKE = "L", BS, A0-A9 = Don't care)

The SelfRefresh is another refresh mode available in the SGRAM. It is the preferred refresh mode for data retention and low power operation. Once the SelfRefresh command is registered, all the inputs to the SGRAM become "don't care" with the exception of CKE, which must remain LOW. The refresh addressing and timing is internally generated to reduce power consumption. The SGRAM may remain in SelfRefresh mode for an indefinite period. The SelfRefresh mode is exited by restarting the external clock and then asserting HIGH on CKE (SelfRefresh Exit command).

18 SelfRefresh Exit command (refer to Figure 5 in Timing Waveforms)

(CKE = "H", CS# = "H" or CKE = "H", RAS# = "H", CAS# = "H", WE# = "H")

This command is used to exit from the SelfRefresh mode. Once this command is registered, NOP or Device Deselect commands must be issued for t_{RC}(min.) because time is required for the completion of any bank currently being internally refreshed. If auto refresh cycles in bursts are performed during normal operation, a burst of 2048 auto refresh cycles should be completed just prior to entering and just after exiting the SelfRefresh mode.

19 Clock Suspend Mode Entry / PowerDown Mode Entry command (refer to Figures 6, 7, and 8 in Timing Waveforms)

(CKE = "L")

When the SGRAM is operating the burst cycle, the internal CLK is suspended(masked) from the subsequent cycle by issuing this command (asserting CKE "LOW"). The device operation is held intact while CLK is suspended. On the other hand, when both banks are in the idle state, this command performs entry into the PowerDown mode. All input and output buffers (except the CKE buffer) are turned off in the PowerDown mode. The device may not remain in the Clock Suspend or PowerDown state longer than the refresh period (32ms) since the command does not perform any refresh operations.

20 Clock Suspend Mode Exit / PowerDown Mode Exit command (refer to Figures 6, 7, and 8 in Timing Waveforms)

(CKE= "H")

When the internal CLK has been suspended, the operation of the internal CLK is reinitiated from the subsequent cycle by providing this command (asserting CKE "HIGH"). When the device is in the PowerDown mode, the device exits this mode and all disabled buffers are turned on to the active state. t_{PDE}(min.) is required when the device exits from the PowerDown mode. Any subsequent commands can be issued after one clock cycle from the end of this command.

21 Data Write / Output Enable, Data Mask / Output Disable command

(DQM = "L", "H")

During a write cycle, the DQM signal functions as a Data Mask and can control every word of the input data. During a read cycle, the DQM functions as the controller of output buffers. DQM is also used for device selection, byte selection and bus control in a memory system. DQM0 controls DQ0 to DQ7, DQM1 controls DQ8 to DQ15, DQM2 controls DQ16 to DQ23, and DQM3 controls DQ24 to DQ31. DQM masks the DQ's by a byte regardless that the corresponding DQ's are in a state of write-per-bit masking or pixel masking. Each DQM0-3 corresponds to DQ0-7, DQ8-15, DQ16-23, and DQ24-31.

Absolute Maximum Rating

Symbol	Item	Rating	Unit	Note
V_{IN}, V_{OUT}	Input, Output Voltage	- 0.3~V_{DD} + 0.3	V	1
V_{DD}, V_{DDQ}	Power Supply Voltage	- 0.3~4.6	V	1
T_{OPR}	Operating Temperature	0~70	°C	1
T_{STG}	Storage Temperature	- 55~150	°C	1
T_{SOLDER}	Soldering Temperature (10s)	260	°C	1
P_D	Power Dissipation	1	W	1
I_{OUT}	Short Circuit Output Current	50	mA	1

Recommended D.C. Operating Conditions (Ta = 0~70°C)

Symbol	Parameter	Min.	Typ.	Max.	Unit	Note
V_{DD}	Power Supply Voltage	3.0	3.3	3.6	V	2
V_{DDQ}	Power Supply Voltage(for I/O Buffer)	3.0	3.3	3.6	V	2
V_{IH}	LVTTL Input High Voltage	2.0	¡ Ð	V_{DD} + 0.3	V	2
V_{IL}	LVTTL Input Low Voltage	- 0.3	¡ Ð	0.8	V	2

Capacitance (V_{DD} = 3.3V, f = 1MHz, Ta = 25°C)

Symbol	Parameter	Min.	Max.	Unit
C_I	Input Capacitance	¡ Ð	5	pF
$C_{I/O}$	Input/Output Capacitance	¡ Ð	7	pF

Note: These parameters are periodically sampled and are not 100% tested.

Recommended D.C. Operating Conditions (V_{DD} = 3.3V±0.3V, Ta = 0~70°C)

Description/Test condition		Symbol	- 5/6/7/8 Min	- 5/6/7/8 Max.	Unit	Note
Operating Current $t_{RC} \geq t_{RC}$(min), Outputs Open Address changed once during t_{CK}(min). Burst Length = 2	1 bank operation	I_{DD1}		200/180/160/150	mA	3
Precharge Standby Current in non-power down mode $t_{CK} = t_{CK}$(min), CS# $\geq V_{IH}$, CKE $\geq V_{IH}$(min) Input signals are changed once during 30ns.		I_{DD2N}		30		3
Precharge Standby Current in non-power down mode $t_{CK} = \infty$, CKE $\geq V_{IH}$(min), Input signals are stable.		I_{DD2NS}		15		
Precharge Standby Current in power down mode $t_{CK} = t_{CK}$(min), CKE $\leq V_{IL}$(max)		I_{DD2P}		2		3
Precharge Standby Current in power down mode $t_{CK} = \infty$, CKE $\leq V_{IL}$(max)		I_{DD2PS}		2		
Active Standby Current in power down mode CKE $\leq V_{IL}$(max), $t_{CK} = t_{CK}$(min)		I_{DD3P}		3		3
Active Standby Current in non-power down mode CKE $\geq V_{IH}$(min), $t_{CK} = t_{CK}$(min)		I_{DD3N}		50		
Operating Current (Burst mode) $t_{CK}=t_{CK}$(min), Outputs Open, Multi-bank interleave,gapless data		I_{DD4}		290/260/230/200		3, 4
Refresh Current $t_{RC} \geq t_{RC}$(min)		I_{DD5}		200/180/160/150		3
Self Refresh Current CKE $\leq$ 0.2V		I_{DD6}		2		
Operating Current (Block Write) $t_{CK} = t_{CK}$(min), Outputs Open, $t_{BWC} = t_{BWC}$(min).		I_{DD7}		230/200/170/150		

Parameter	Description	Min.	Max.	Unit	Note
I_{IL}	Input Leakage Current (0V $\leq V_{IN} \leq V_{DD}$, All other pins not under test = 0V)	- 5	5	μA	
I_{OL}	Output Leakage Current Output disable, 0V $\leq V_{OUT} \leq V_{DDQ}$)	- 5	5	μA	
V_{OH}	LVTTL Output "H" Level Voltage (I_{OUT} = -2mA)	2.4	¡ Ð	V	
V_{OL}	LVTTL Output "L" Level Voltage (I_{OUT} = 2mA)	¡ Ð	0.4	V	

Electrical Characteristics and Recommended A.C. Operating Conditions

(V_{DD} = 3.3V±0.3V, Ta = 0~70°C) (Note: 5, 6, 7, 8)

Symbol	A.C. Parameter		- 5/6/7/8 Min.	- 5/6/7/8 Max.	Unit	Note
t_{RC}	Row cycle time (same bank)		55/60/63/72		ns	9
t_{RCD}	RAS# to CAS# delay (same bank)		15/18/21/24			9
t_{RP}	Precharge to refresh/row activate command (same bank)		15/18/21/24			9
t_{RRD}	Row activate to row activate delay (different banks)		10/12/14/16			9
t_{RAS}	Row activate to precharge time (same bank)		25/30/35/40	100,000		9
t_{WR}	Write recovery time		5/6/7/8			
t_{CK1}	Clock cycle time	CL* = 1	-/18/21/24			10
t_{CK2}		CL* = 2	-/9/10/12			
t_{CK3}		CL* = 3	5/6/7/8			
t_{CH}	Clock high time		2/2/2.5/3			11
t_{CL}	Clock low time		2/2/2.5/3			11
t_{AC1}	Access time from CLK (positive edge)	CL* = 1		-/16/19/22		11
t_{AC2}		CL* = 2		-/7/8/10		
t_{AC3}		CL* = 3		4.5/5.5/5.5/6		
t_{CCD}	CAS# to CAS# Delay time		1		Cycle	
t_{OH}	Data output hold time		2		ns	10
t_{LZ}	Data output low impedance		1/1/1/2			
t_{HZ}	Data output high impedance			3/4/5/6		8
t_{IS}	Data/Address/Control Input set-up time		1.5			11
t_{IH}	Data/Address/Control Input hold time		1			11
t_{SRX}	Minimum CKE "High" for SelfRefresh exit		5/6/7/8			
t_{PDE}	PowerDown Exit set-up time		3/4/5/6			11
t_{RSC}	(Special) Mode Register Set Cycle time		5/6/7/8			9
t_{BWC}	Block Write Cycle time		10/12/14/16			
t_{BPL}	Block Write to Precharge command period		10/12/14/16			
t_{REF}	Refresh time			32	ms	

* CL is CAS# Latency.

Note:

1. Stress greater than those listed under "Absolute Maximum Ratings" may cause permanent damage to the device.
2. All voltages are referenced to V_{SS}.
3. These parameters depend on the cycle rate and these values are measured by the cycle rate under the minimum value of t_{CK} and t_{RC}. Input signals are changed one time during t_{CK}.
4. These parameters depend on the output loading. Specified values are obtained with the output open.
5. Power-up sequence is described in Note 10.
6. A.C. Test Conditions

LVTTL Interface

Reference Level of Output Signals	1.4V / 1.4V
Output Load	Reference to the Under Output Load (B)
Input Signal Levels	2.4V / 0.4V
Transition Time (Rise and Fall) of Input Signals	1ns
Reference Level of Input Signals	1.4V

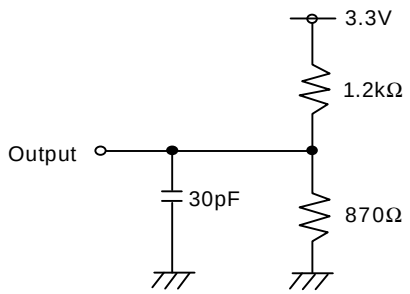

LVTTL D.C. Test Load (A)

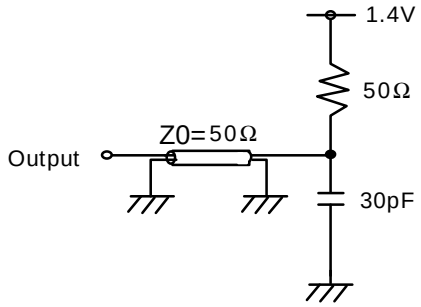

LVTTL A.C. Test Load (B)

7. Transition times are measured between V_{IH} and V_{IL}. Transition(rise and fall) of input signals are in a fixed slope (1 ns).
8. t_{HZ} defines the time in which the outputs achieve the open circuit condition and are not at reference levels.
9. These parameters account for the number of clock cycle and depend on the operating frequency of the clock as follows:
   the number of clock cycles = specified value of timing/Clock cycle time
   (count fractions as a whole number)
10. If clock rising time is longer than 1 ns, (t_R / 2 -0.5) ns should be added to the parameter.
11. Assumed input rise and fall time t_T (t_R & t_F) = 1 ns
    If t_R or t_F is longer than 1 ns, transient time compensation should be considered, i.e.,
    [(t_R + t_F) / 2 -1] ns should be added to the parameter.

12. Power up Sequence

Power up must be performed in the following sequence.

1) Power must be applied to V_{DD} and V_{DDQ}(simultaneously) when all input signals are held "NOP" state and both CKE = "H" and DQM = "H." The CLK signals must be started at the same time.
2) After power-up, a pause of 200µseconds minimum is required. Then, it is recommended that DQM is held "HIGH" (V_{DD} levels) to ensure DQ output is in high impedance.
3) Both banks must be precharged.
4) Mode Register Set command must be asserted to initialize the Mode register.
5) A minimum of 2 Auto-Refresh dummy cycles must be required to stabilize the internal circuitry of the device.

Timing Waveforms

Figure 1. AC Parameters for Write Timing (Burst Length=4, CAS# Latency=2)

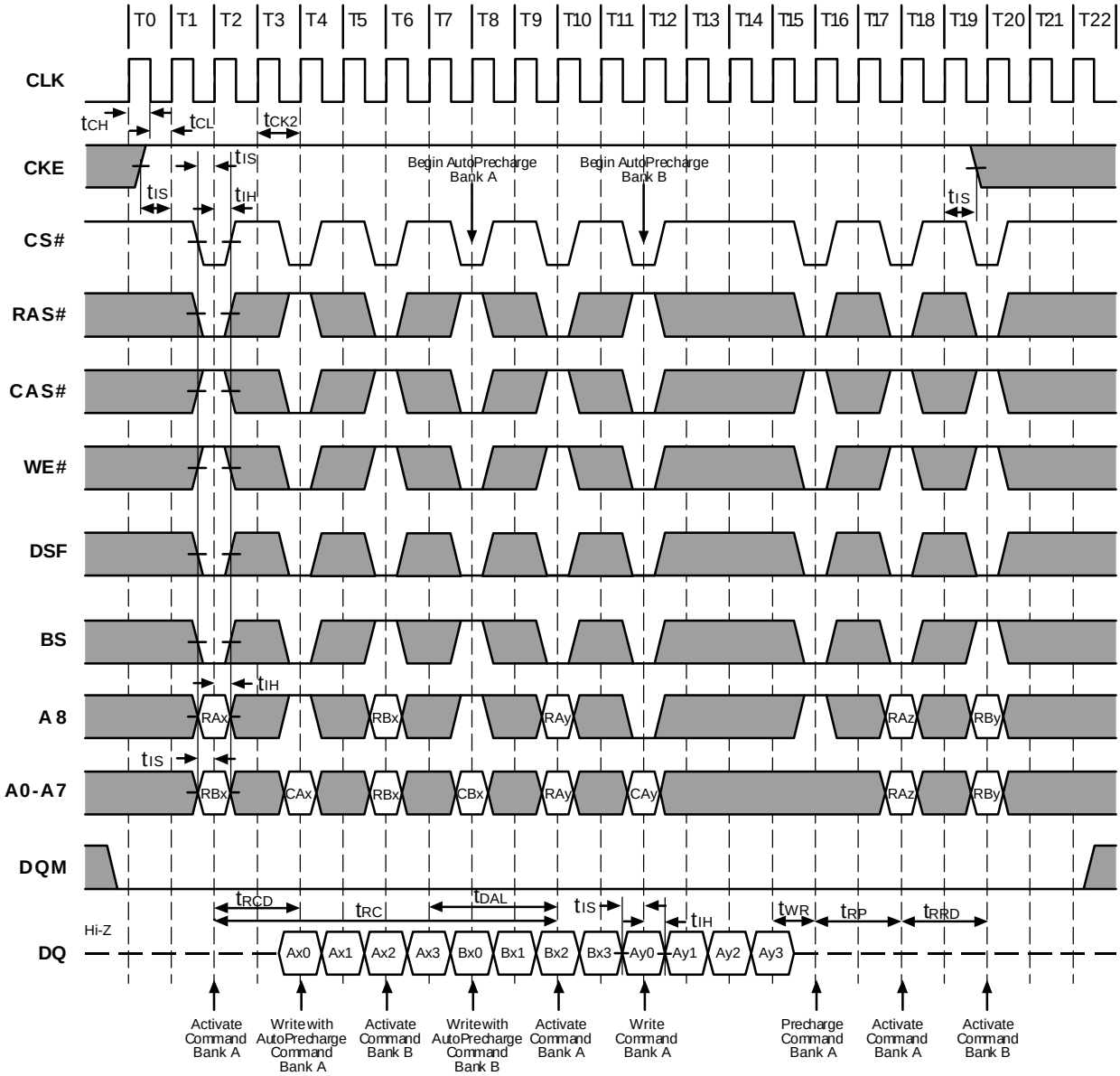

Figure 2. AC Parameters for Read Timing (Burst Length=2, CAS# Latency=2)

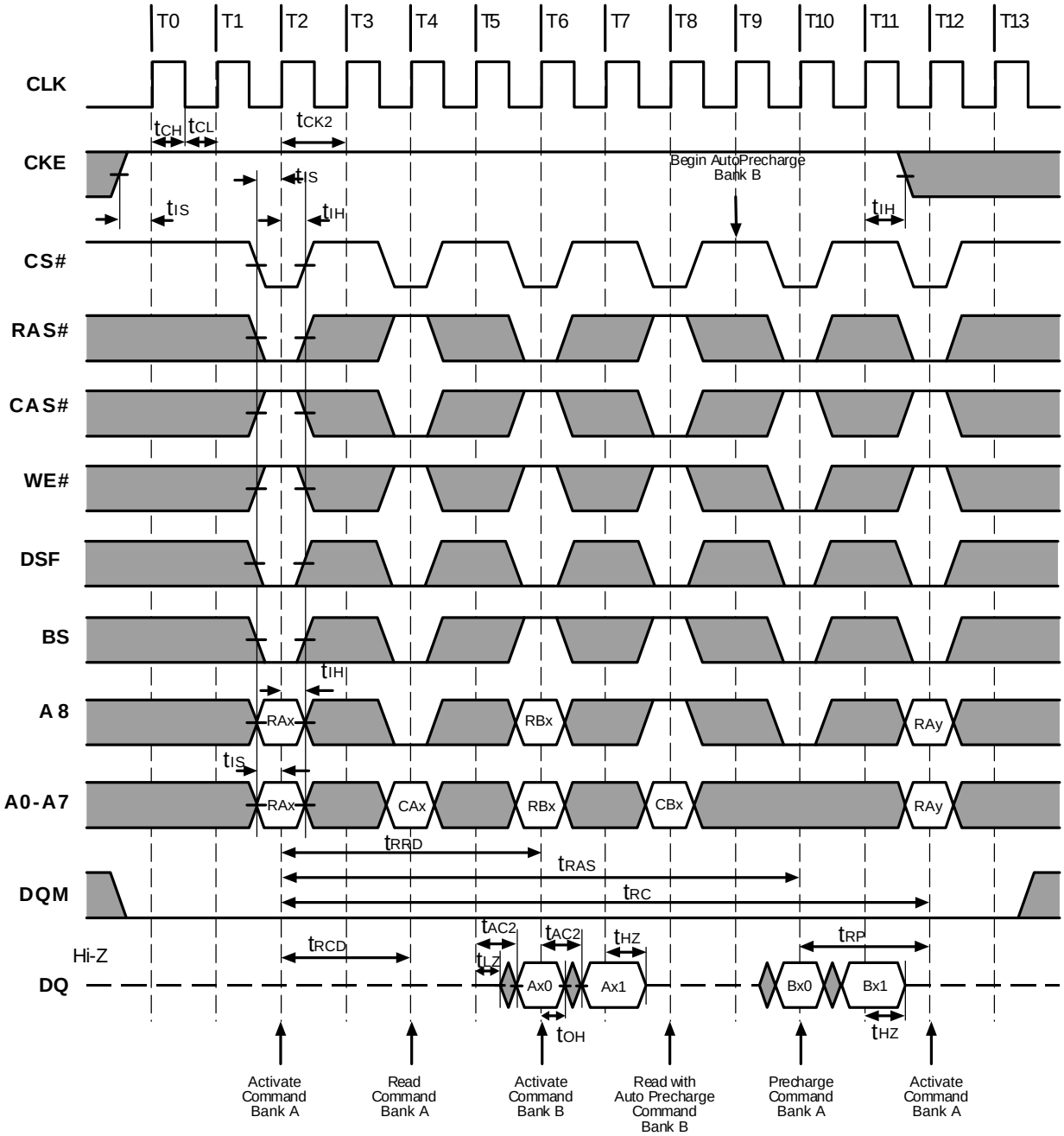

Figure 3. Auto Refresh (CBR) (Burst Length=4, CAS# Latency=2)

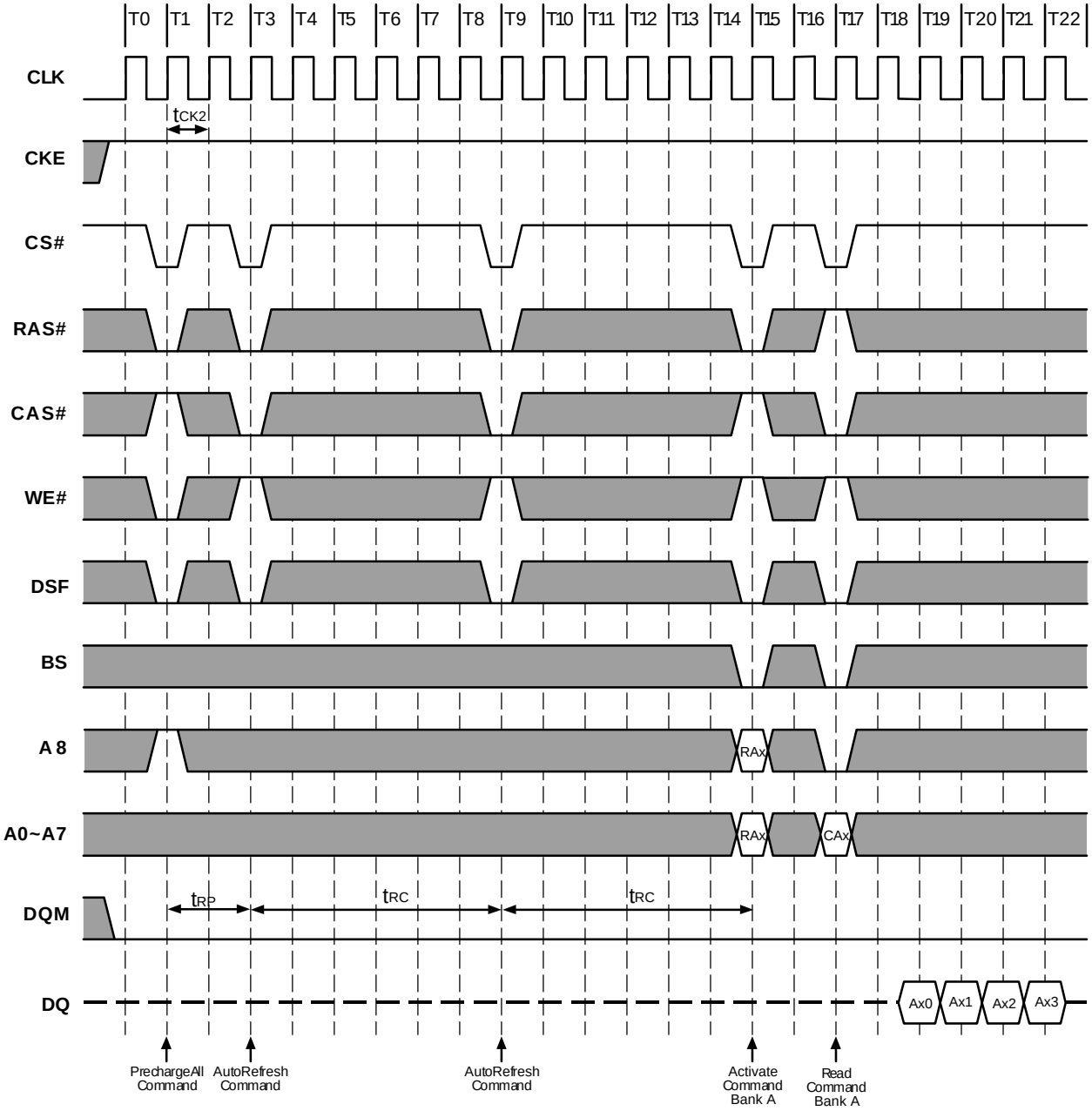

Figure 4. Power on Sequene and Auto Refresh (CBR)

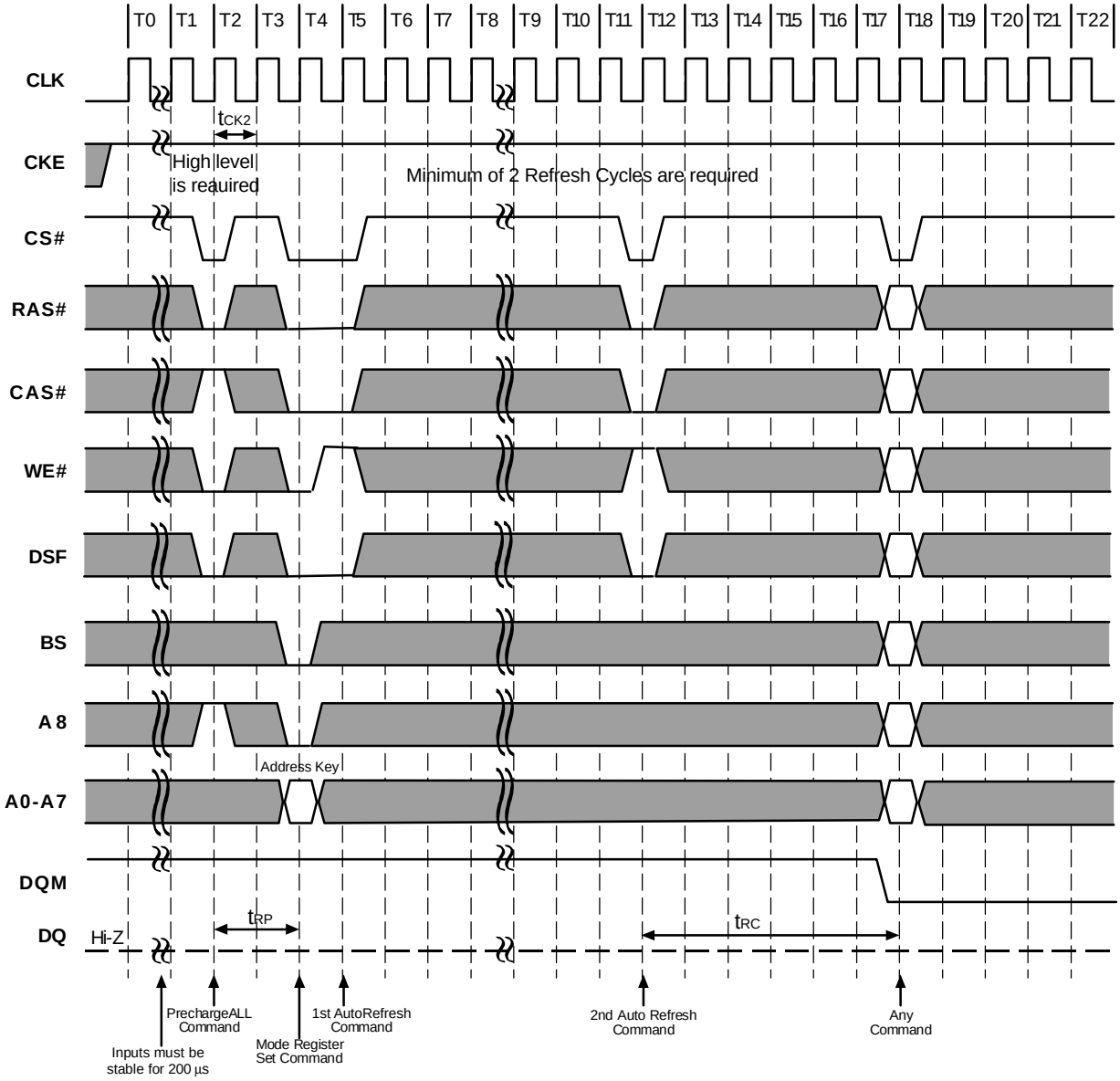

Figure 5. Self Refresh Entry & Exit Cycle

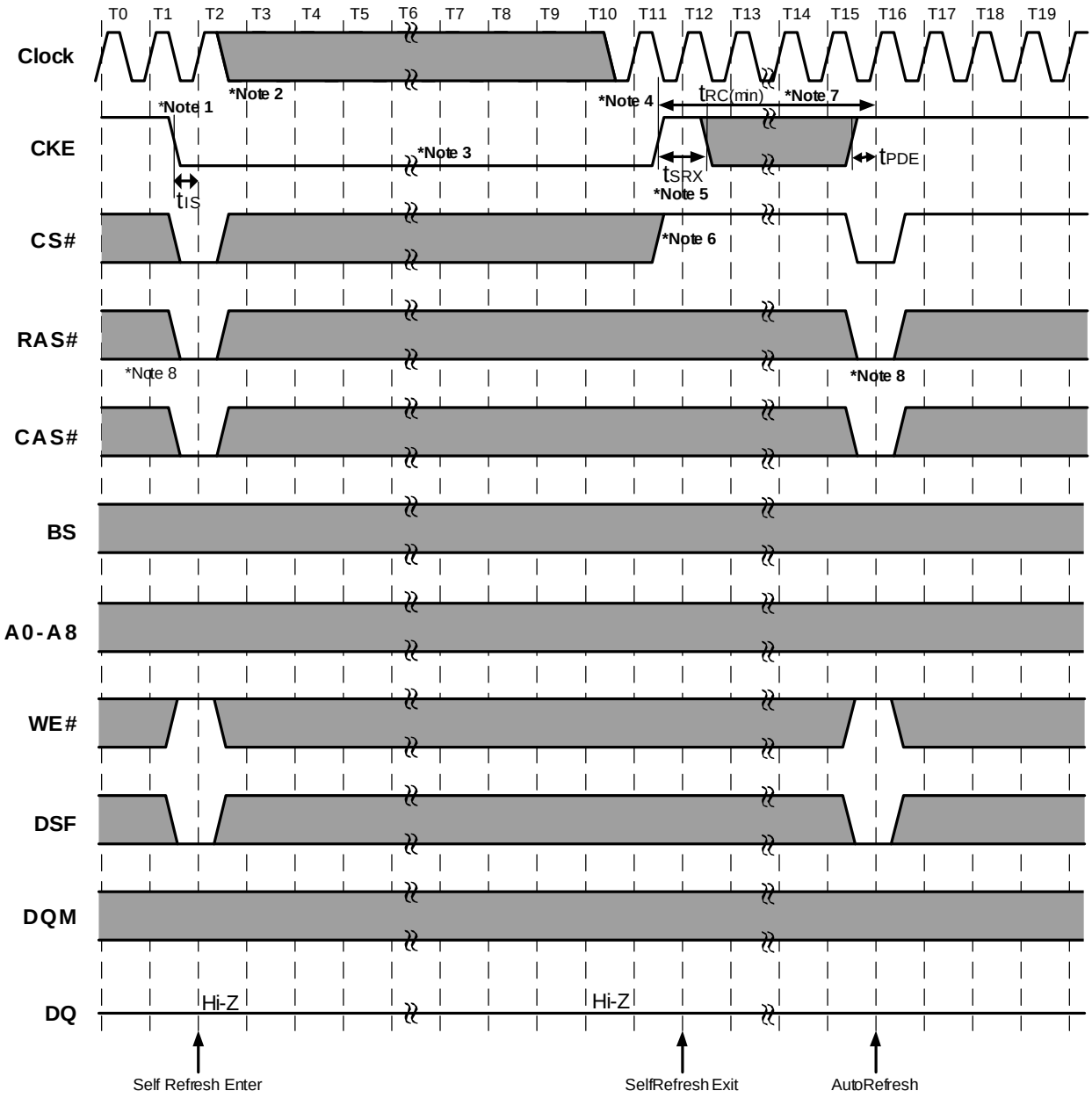

Note: To Enter SelfRefresh Mode

1. CS#, RAS# & CAS# with CKE should be low at the same clock cycle.
2. After 1 clock cycle, all the inputs including the system clock can be don't care except for CKE.
3. The device remains in SelfRefresh mode as long as CKE stays "low".
   Once the device enters SelfRefresh mode, minimum t_{RAS} is required before exit from SelfRefresh.

Note: To Exit SelfRefresh Mode

4. System clock restart and be stable before returning CKE high.
5. Enable CKE and CKE should be set high for minimum time of t_{SRX}.
6. CS# starts from high.
7. Minimum t_{RC} is required after CKE going high to complete SelfRefresh exit.
8. 1024 cycles of burst AutoRefresh is required before SelfRefresh entry and after SelfRefresh exit if the system uses burst refresh.

Figure 6.1. Clock Suspension During Burst Read (Using CKE)
(Burst Length=4, CAS# Latency=1)

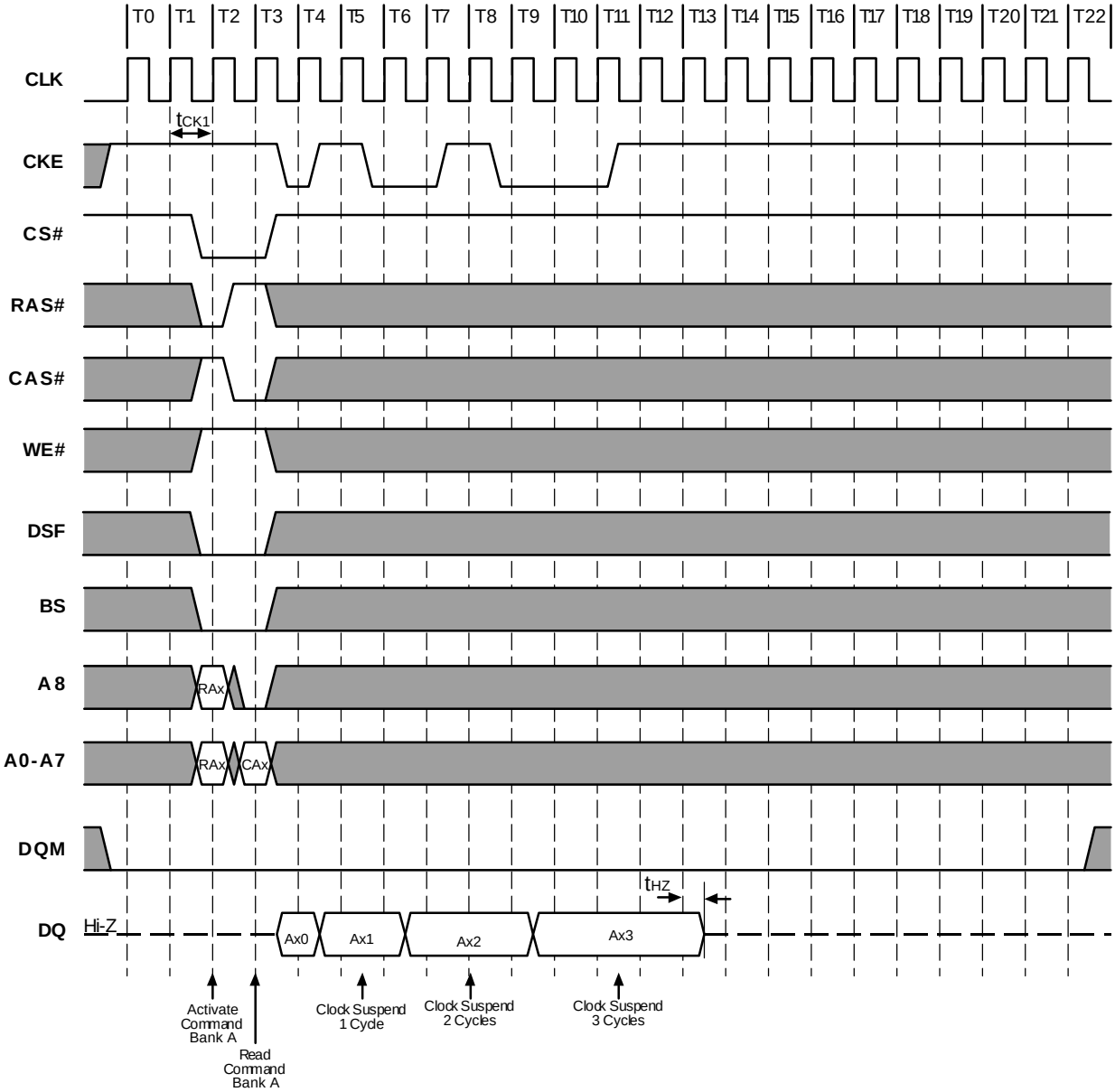

Note: CKE to CLK disable/enable = 1 clock

Figure 6.2. Clock Suspension During Burst Read (Using CKE)
(Burst Length=4, CAS# Latency=2)

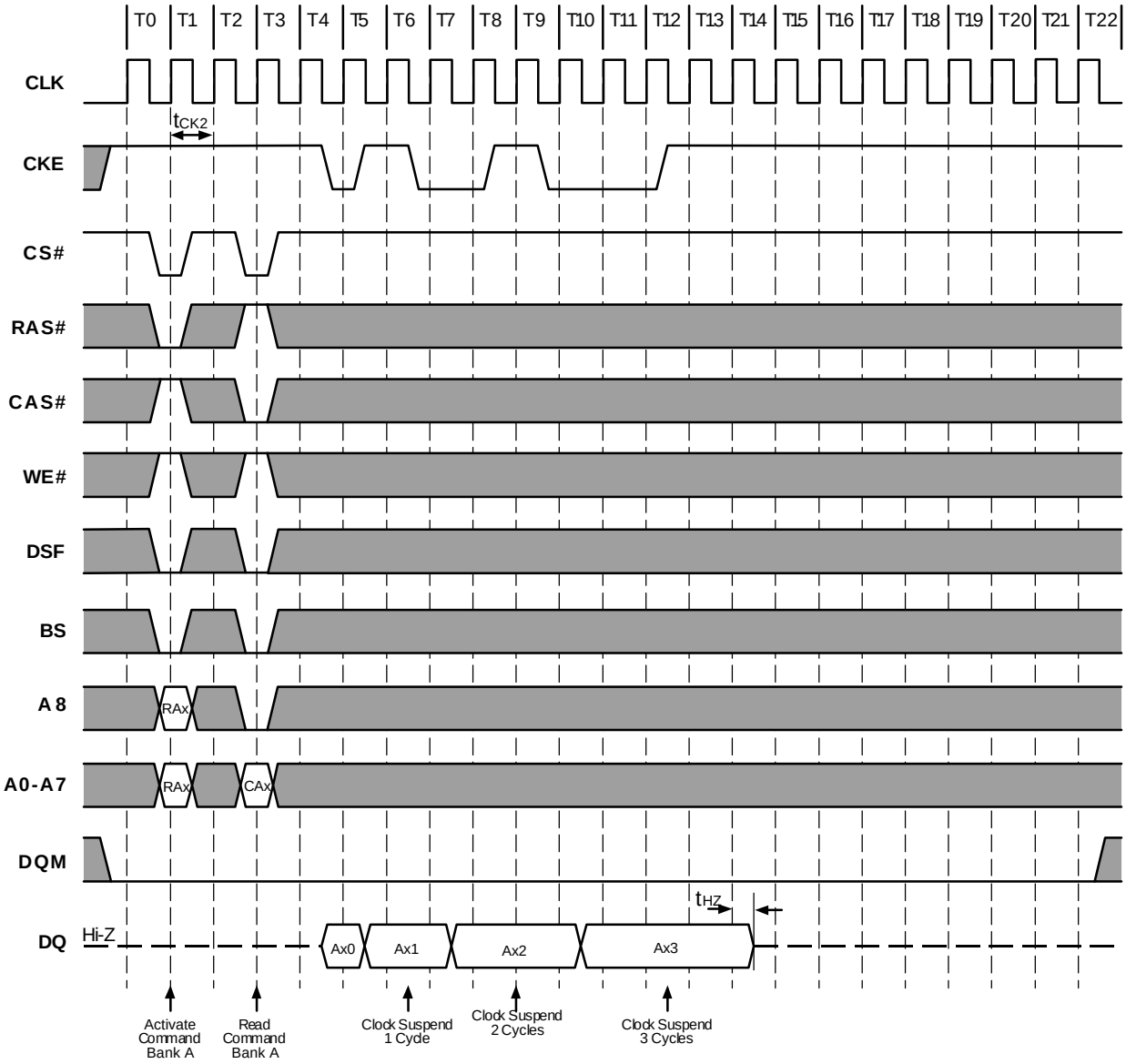

Note: CKE to CLK disable/enable = 1 clock

Figure 6.3. Clock Suspension During Burst Read (Using CKE)
(Burst Length=4, CAS# Latency=3)

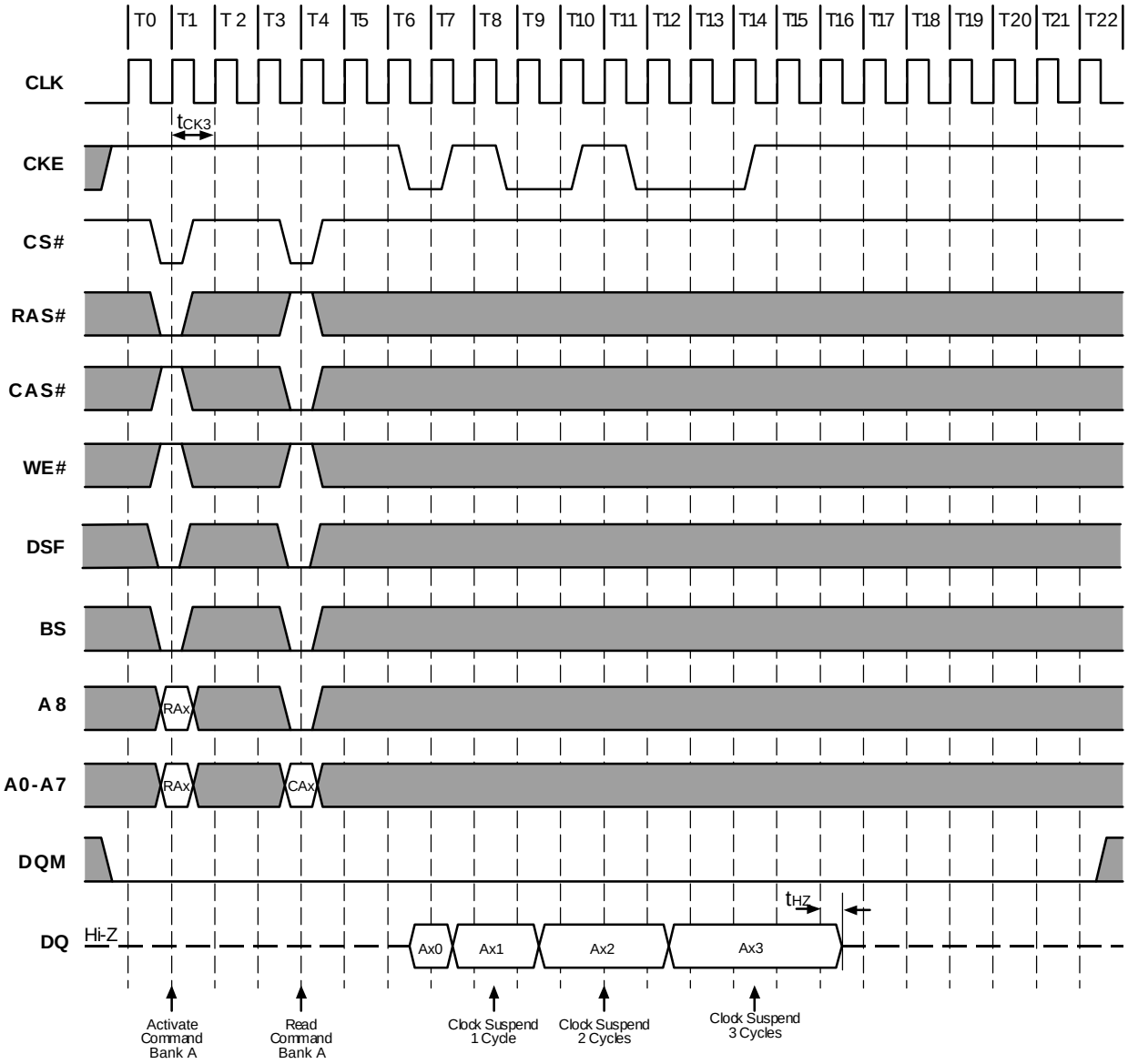

Note: CKE to CLK disable/enable = 1 clock

Figure 7.1. Clock Suspension During Burst Write (Using CKE)

(Burst Length = 4, CAS# Latency = 1)

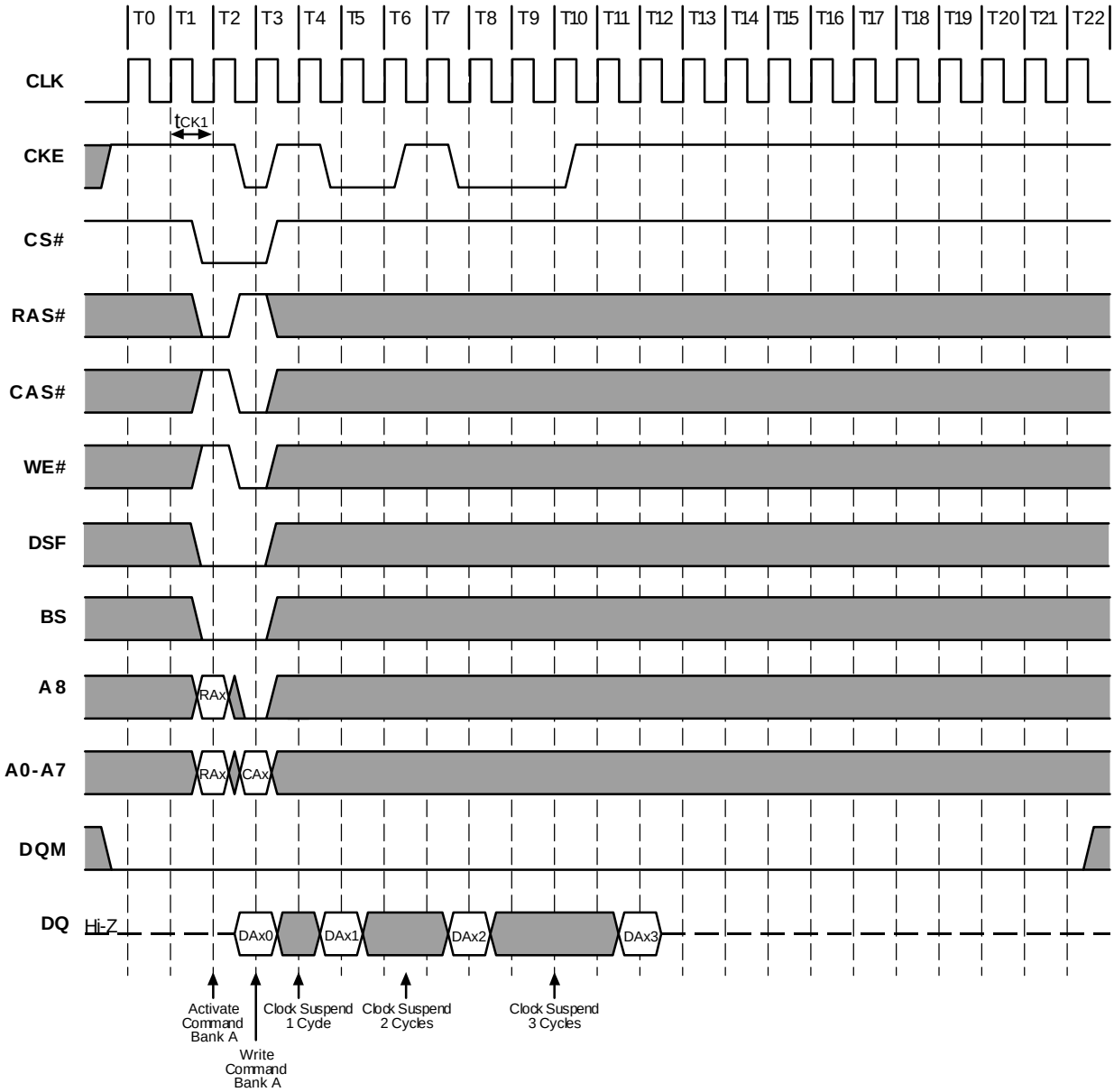

Note: CKE to CLK disable/enable = 1 clock

Figure 7.2. Clock Suspension During Burst Write (Using CKE)
(Burst Length=4, CAS# Latency=2)

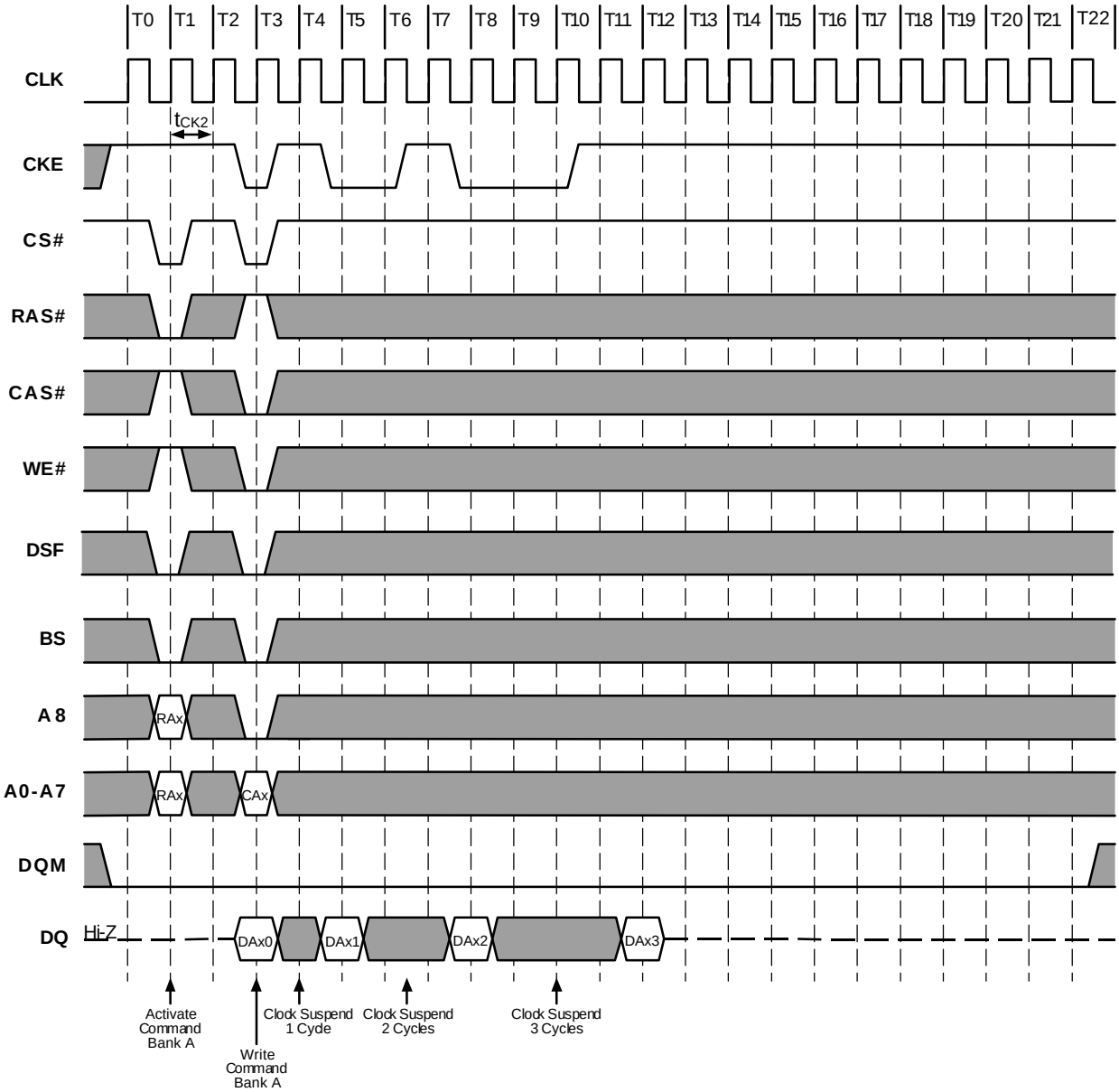

Note: CKE to CLK disable/enable = 1 clock

Figure 7.3. Clock Suspension During Burst Write (Using CKE)
(Burst Length=4, CAS# Latency=3)

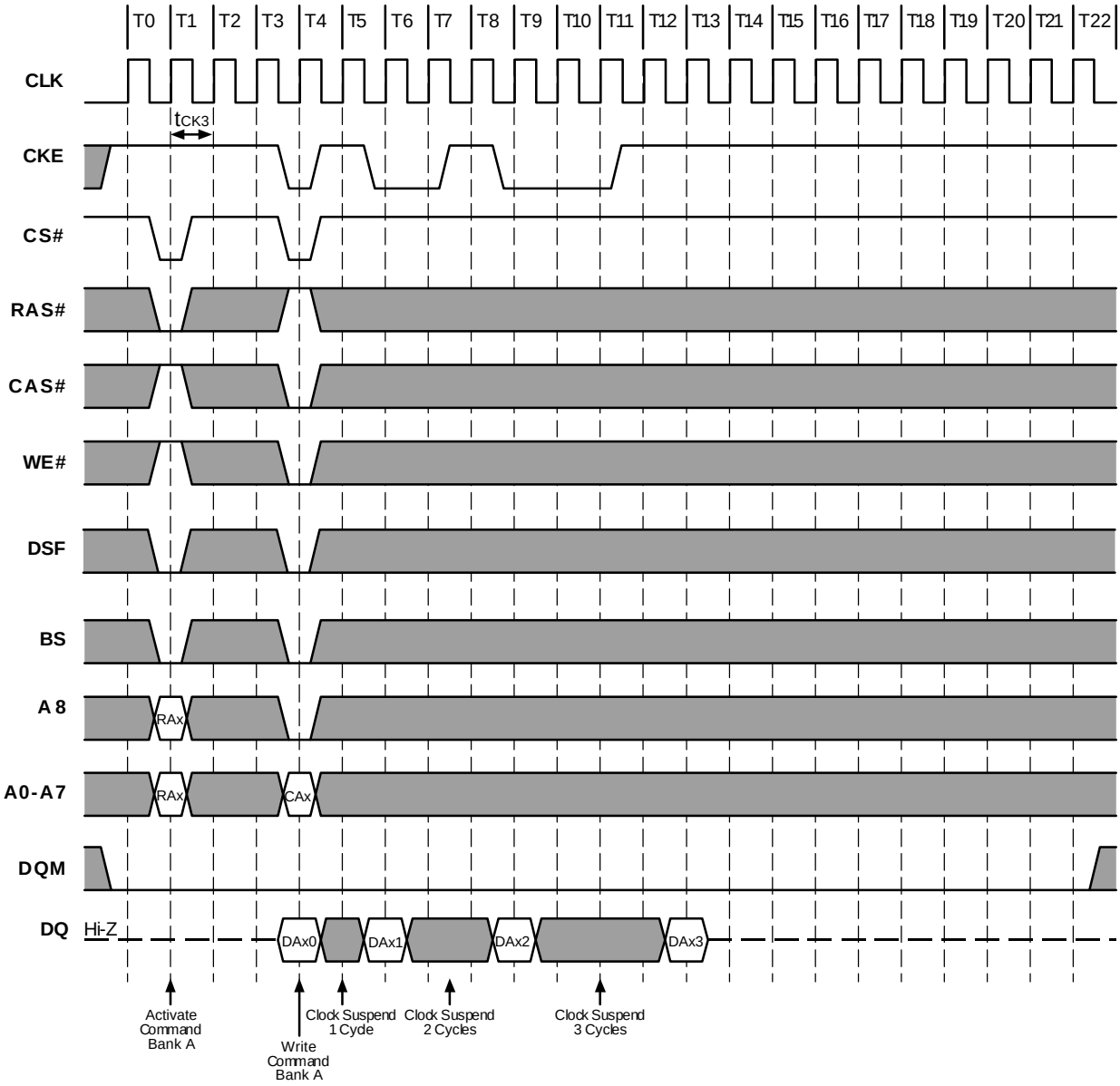

Note: CKE to CLK disable/enable = 1 clock

Figure 8. Power Down Mode and Clock Mask (Burst Lenght=4, CAS# Latency=2)

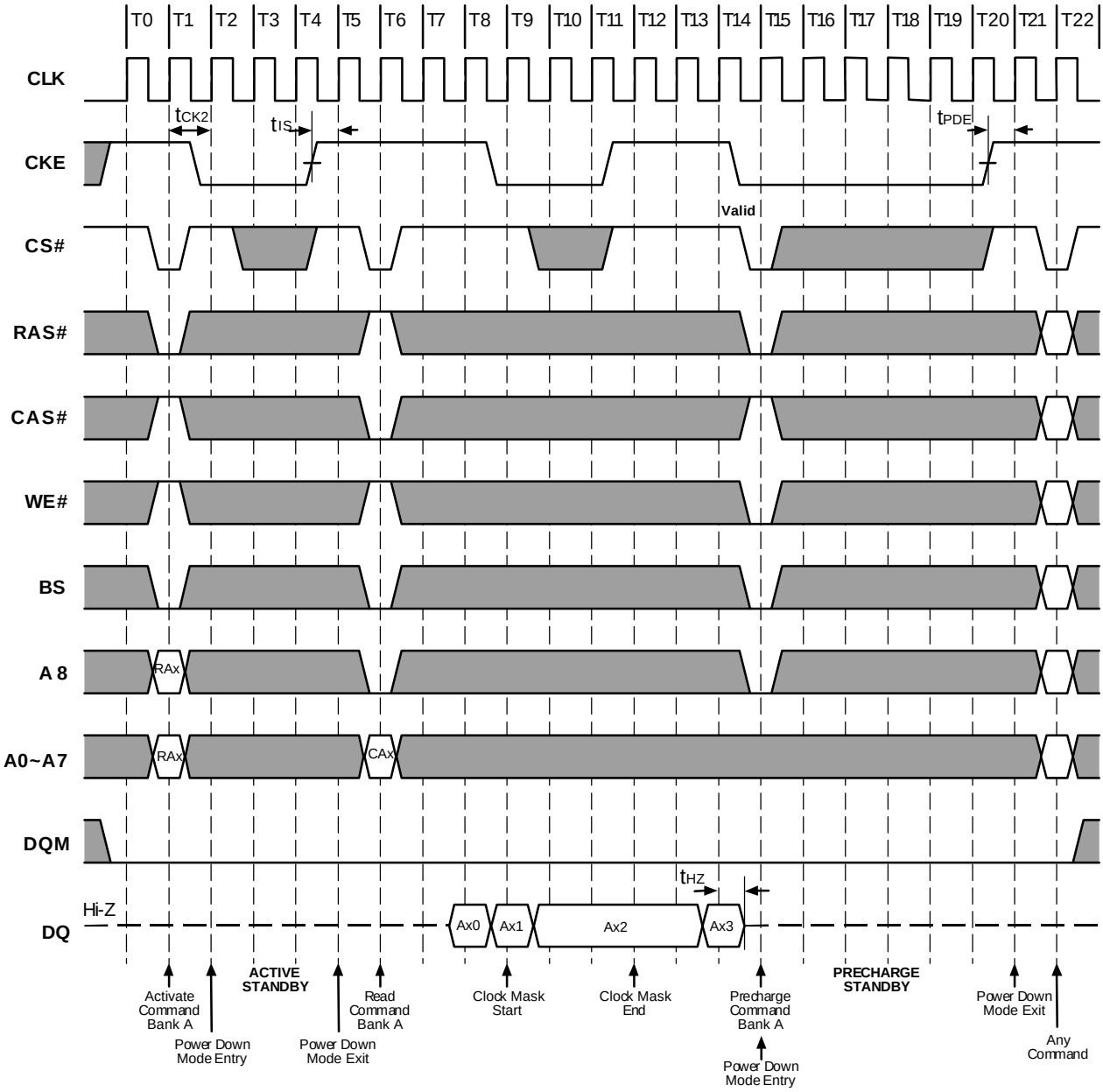

Figure 9.1. Random Column Read (Page within same Bank)
(Burst Length=4, CAS# Latency=1)

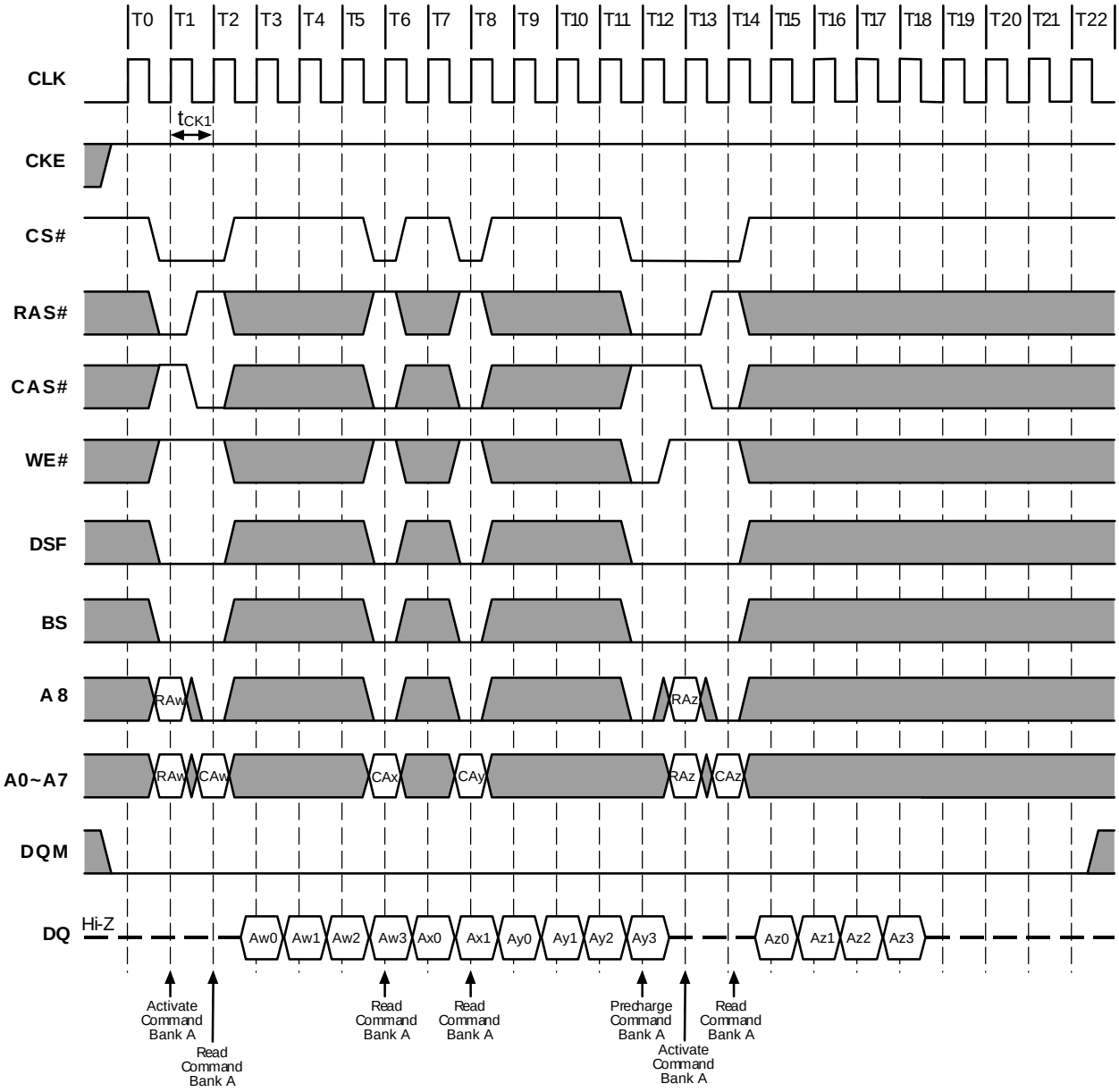

Figure 9.2. Random Column Read (Page within same Bank)
(Burst Length=4, CAS# Latency=2)

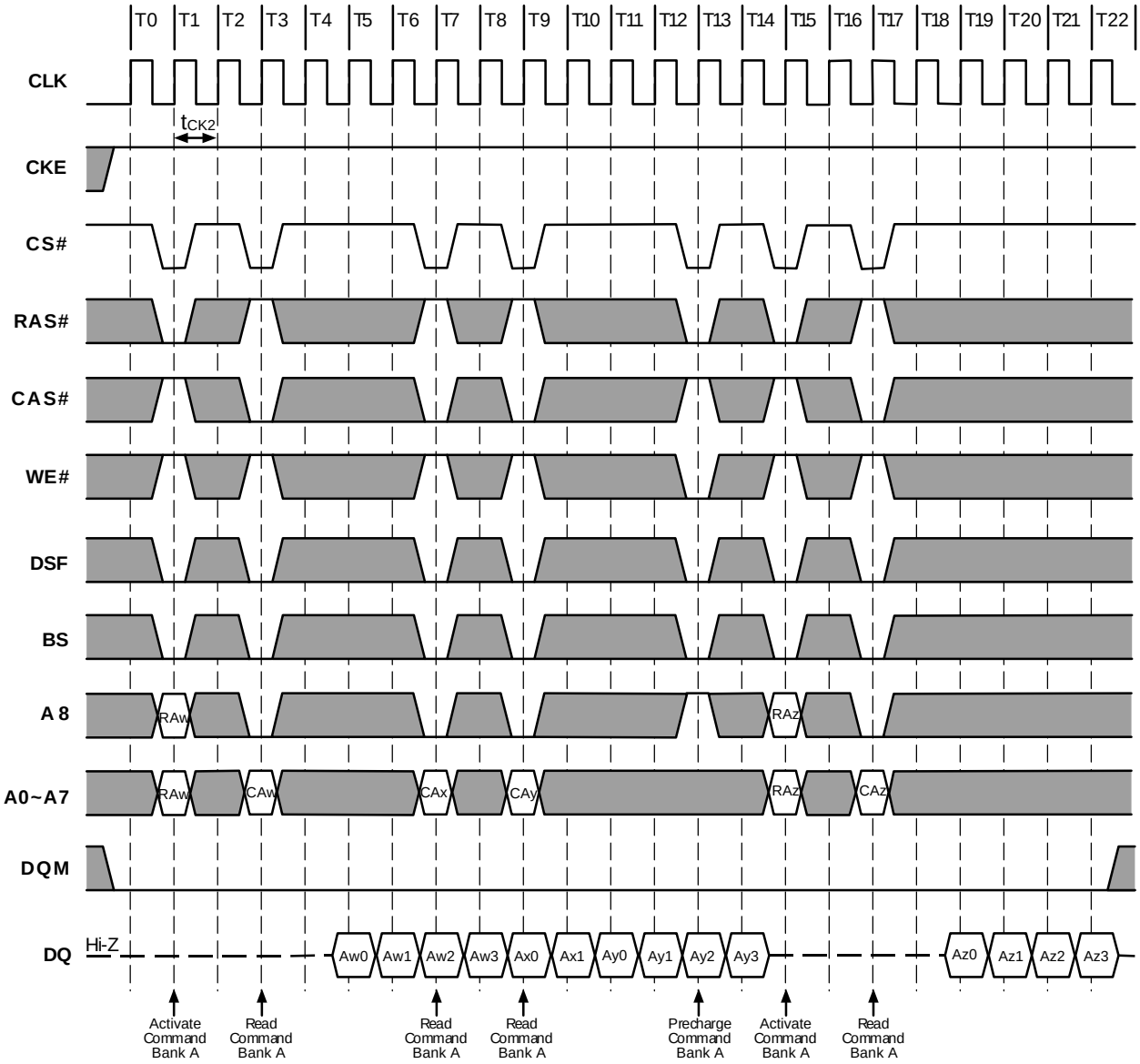

Figure 9.3. Random Column Read (Page within same Bank)
(Burst Length=4, CAS# Latency=3)

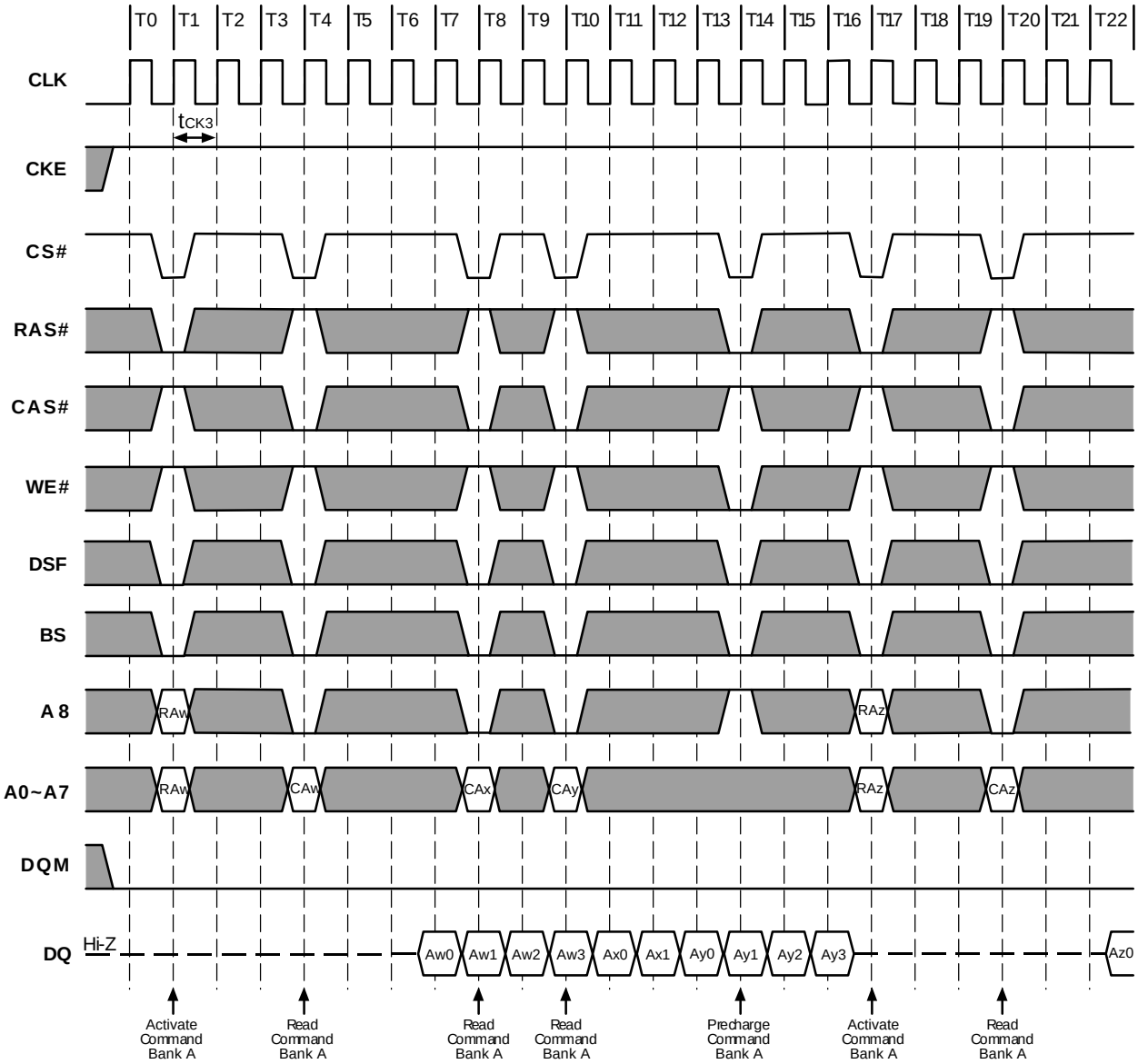

Figure 10.1. Random Column Write (Page within same Bank)
(Burst Length=4, CAS# Latency=1)

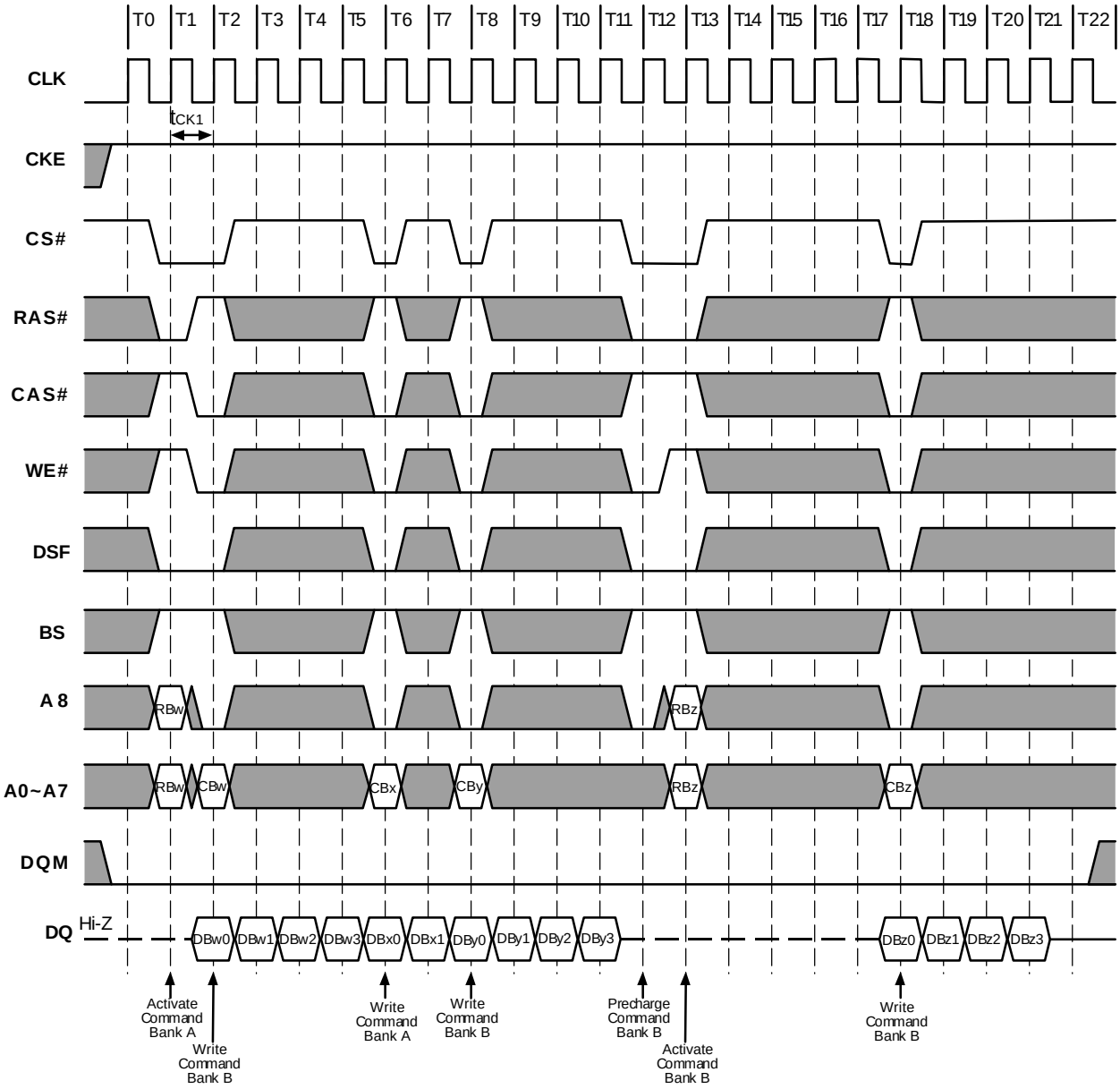

Figure 10.2. Random Column Write (Page within same Bank)
(Burst Length=4, CAS# Latency=2)

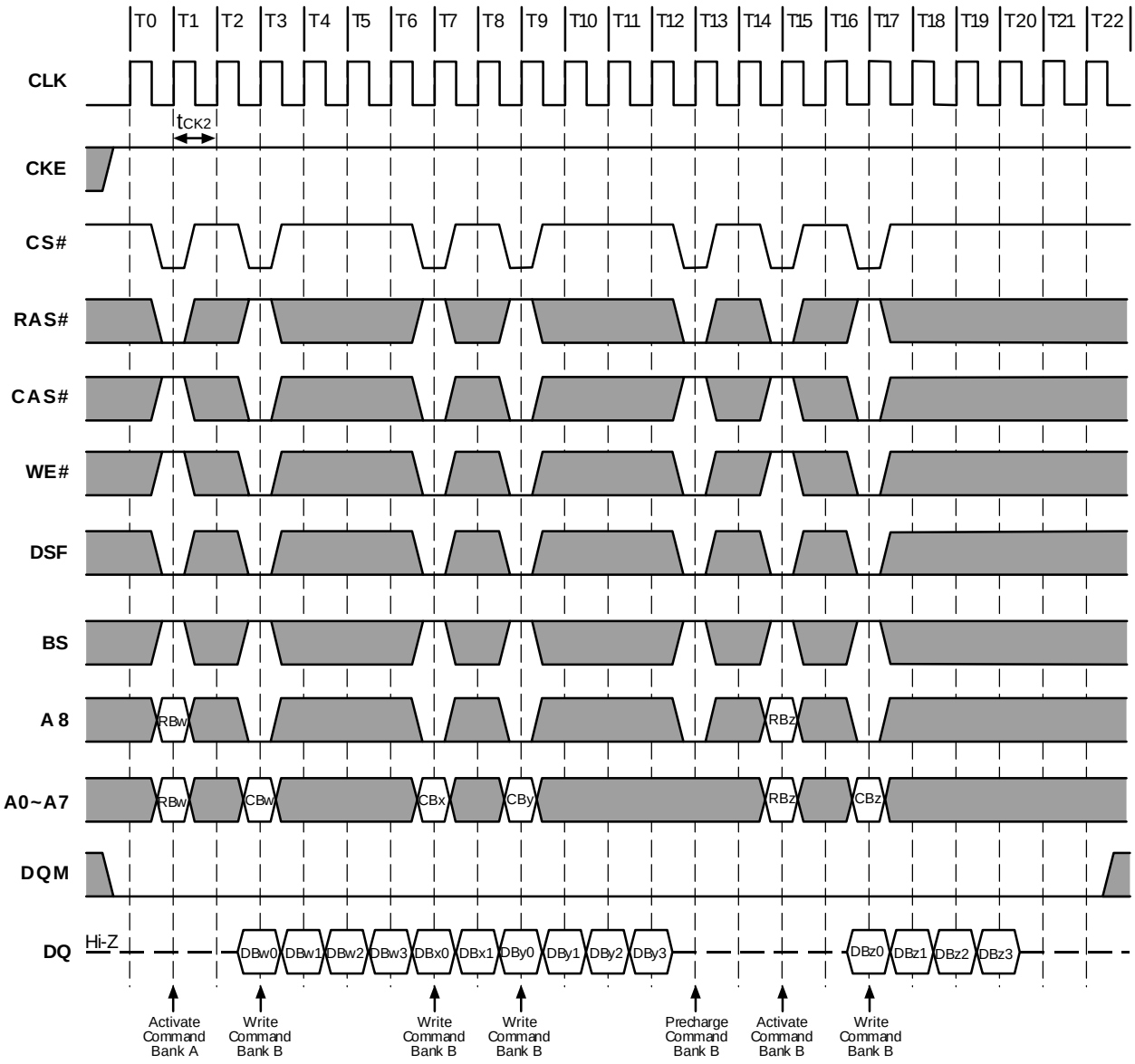

Figure 10.3. Random Column Write (Page within same Bank)
(Burst Length=4, CAS# Latency=3)

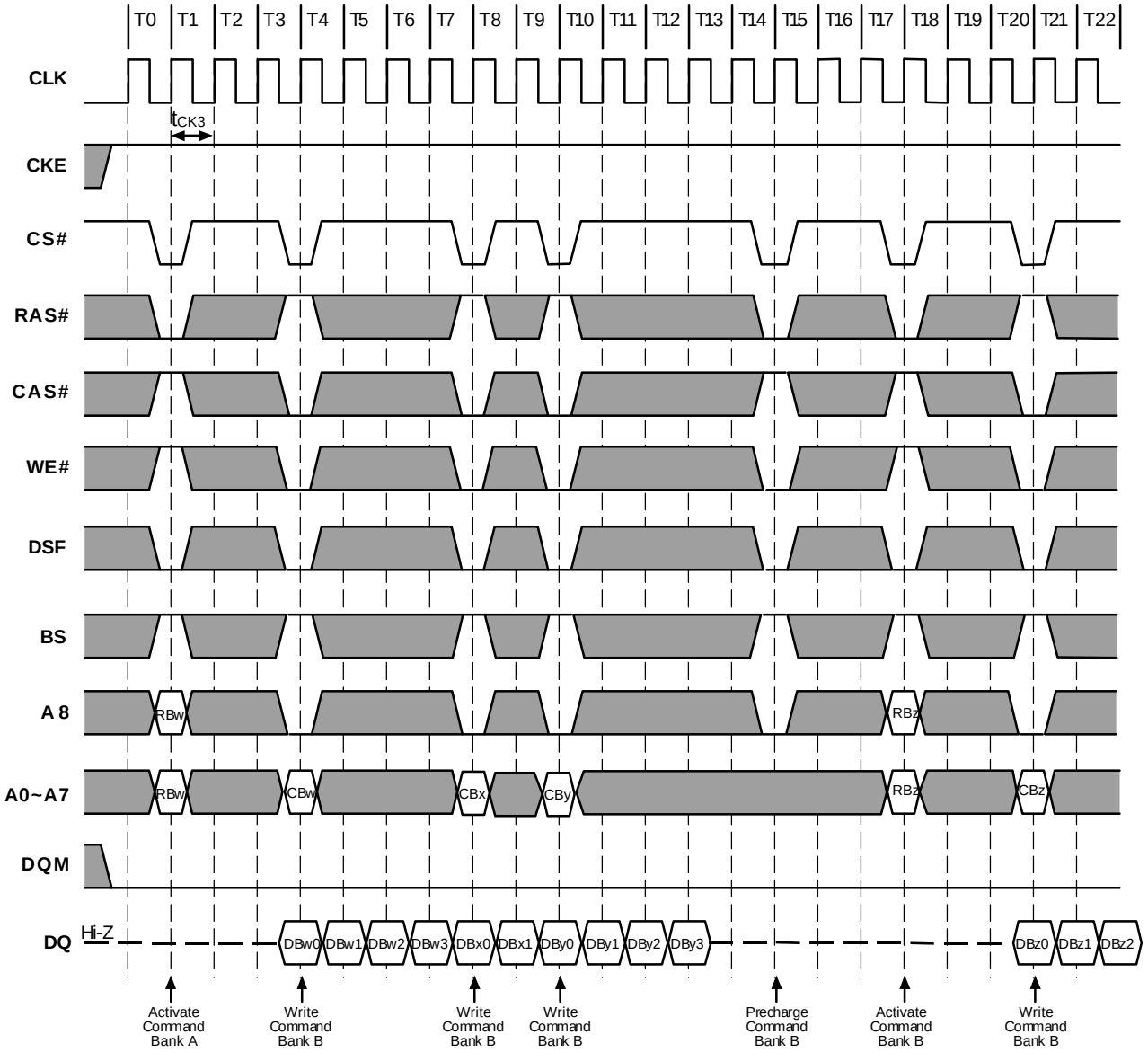

Figure 11.1. Random Row Read (Interleaving Banks)
(Burst Length=8, CAS# Latency=1)

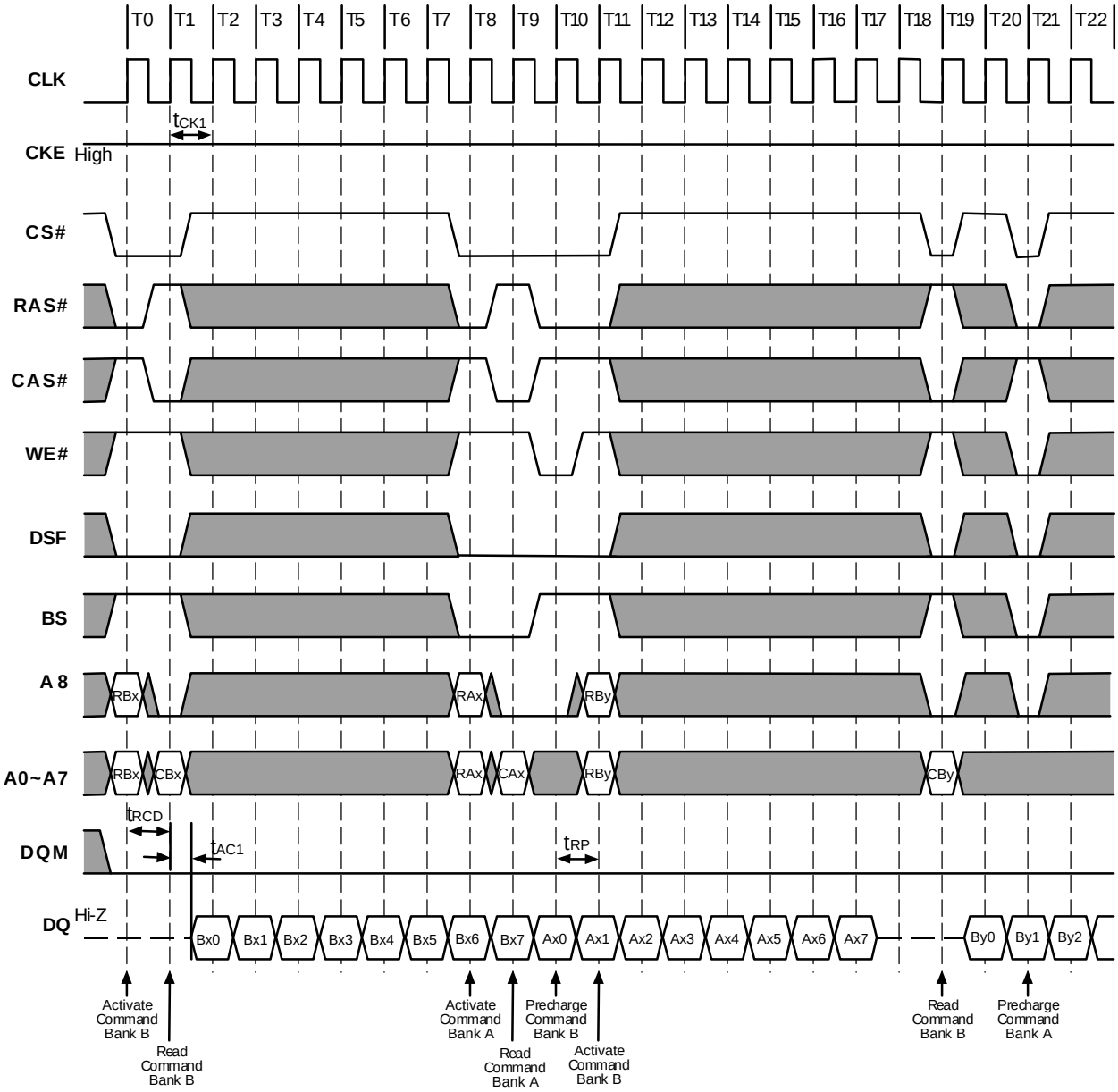

Figure 11.2. Random Row Read (Interleaving Banks)
(Burst Length=8, CAS# Latency=2)

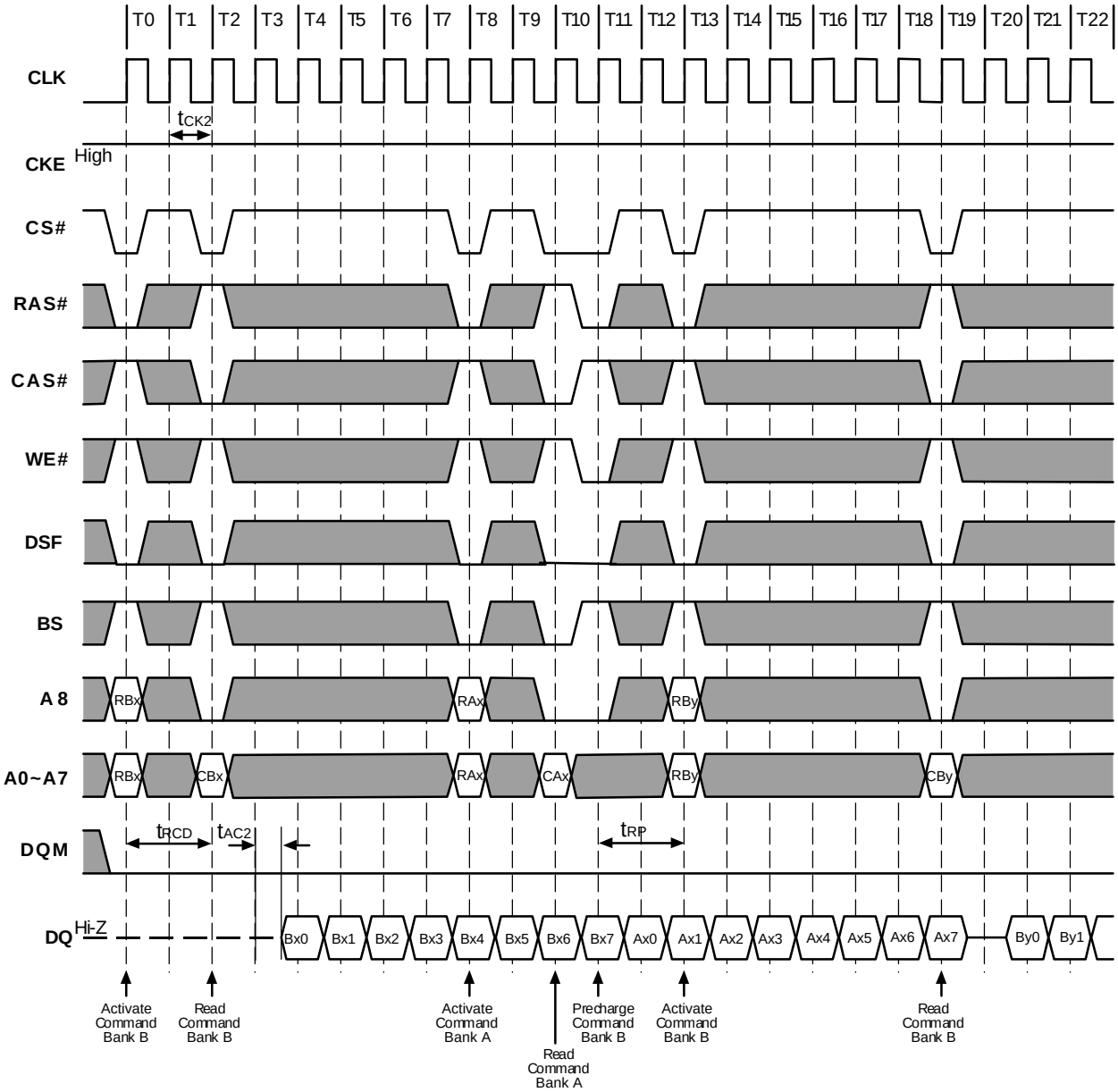

Figure 11.3. Random Row Read (Interleaving Banks)
(Burst Length=8, CAS# Latency=3)

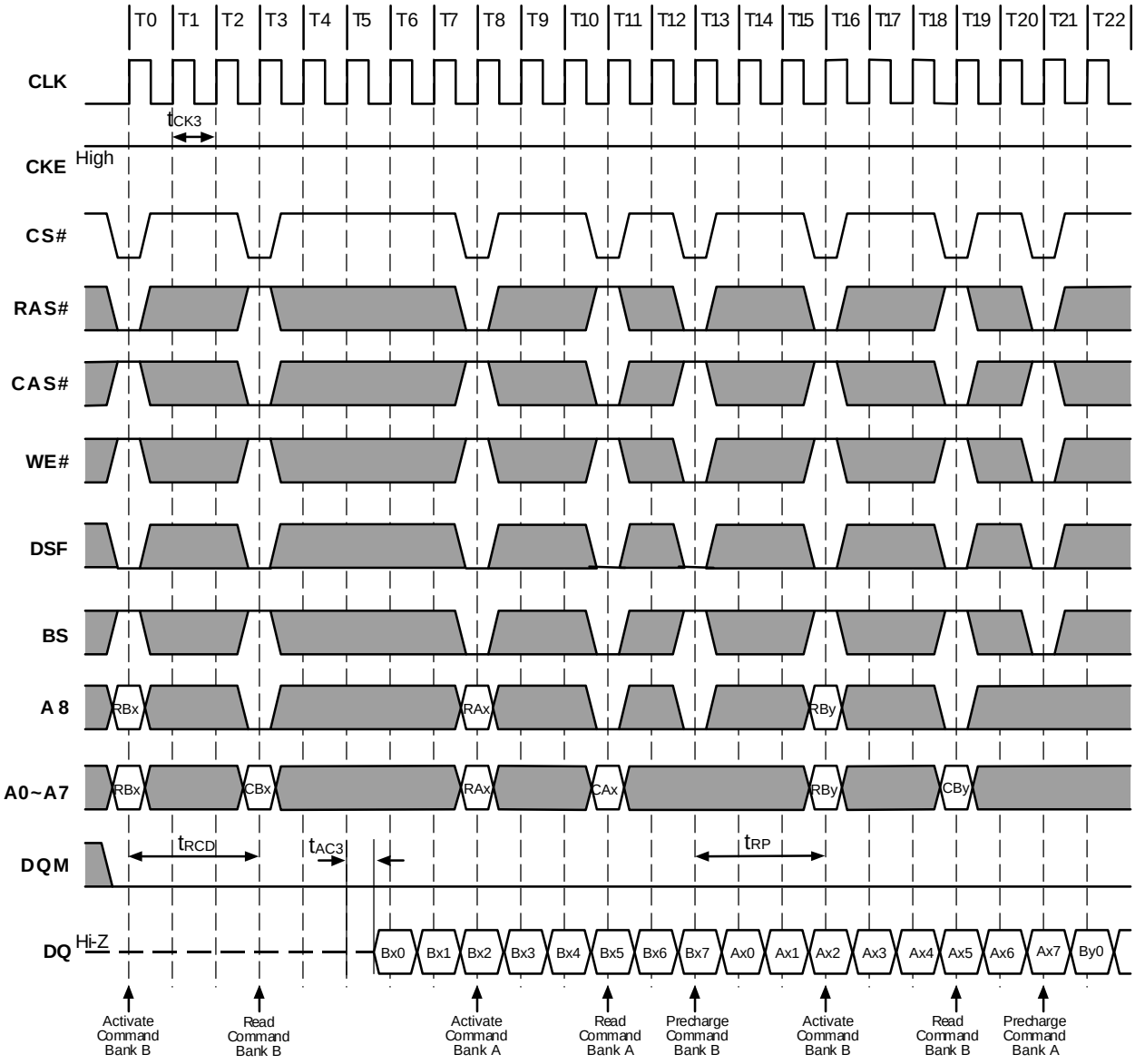

Figure 12.1. Random Row Write (Interleaving Banks)
(Burst Length=8, CAS# Latency=1)

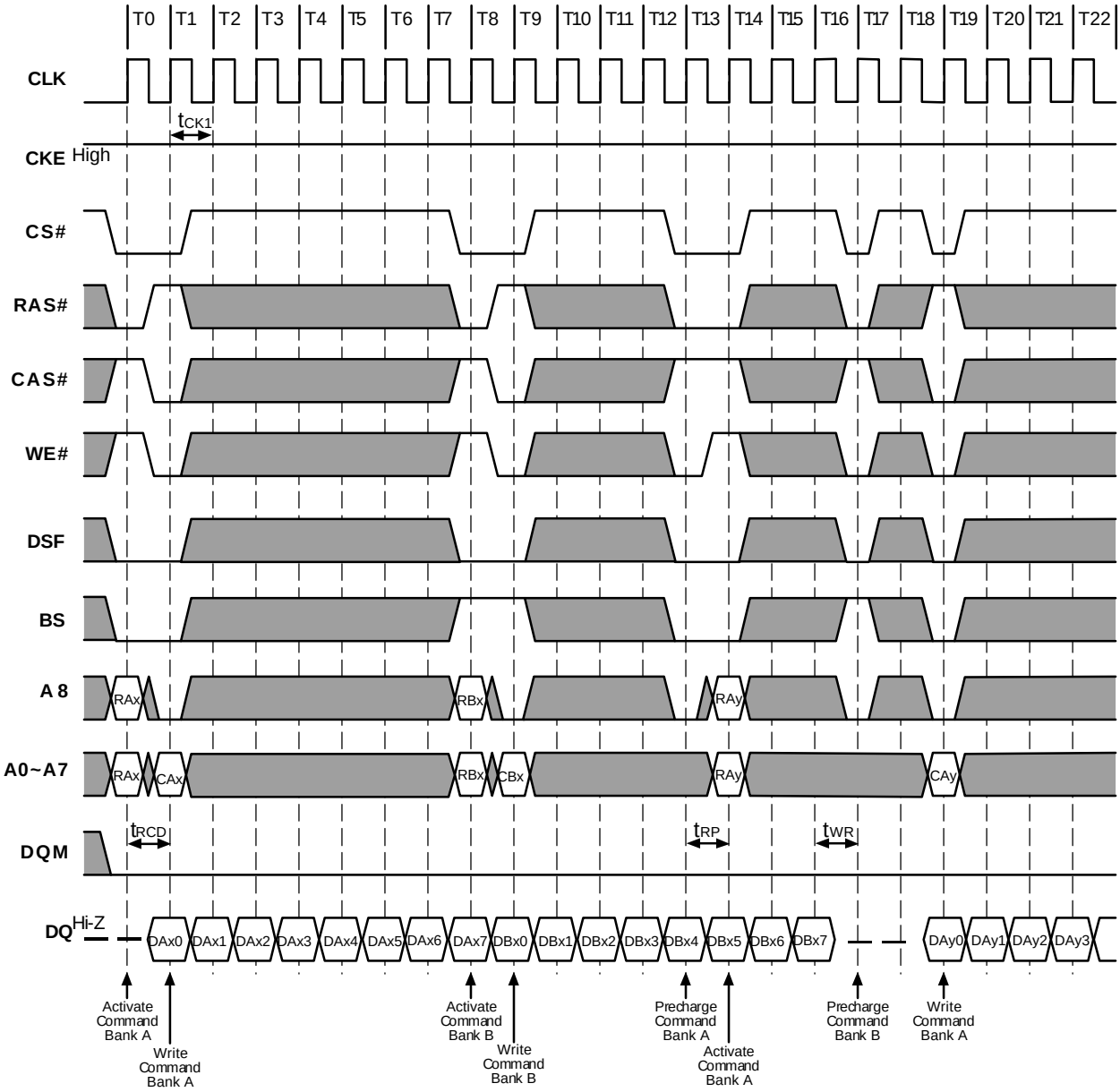

Figure 12.2. Random Row Write (Interleaving Banks)
(Burst Length=8, CAS# Latency=2)

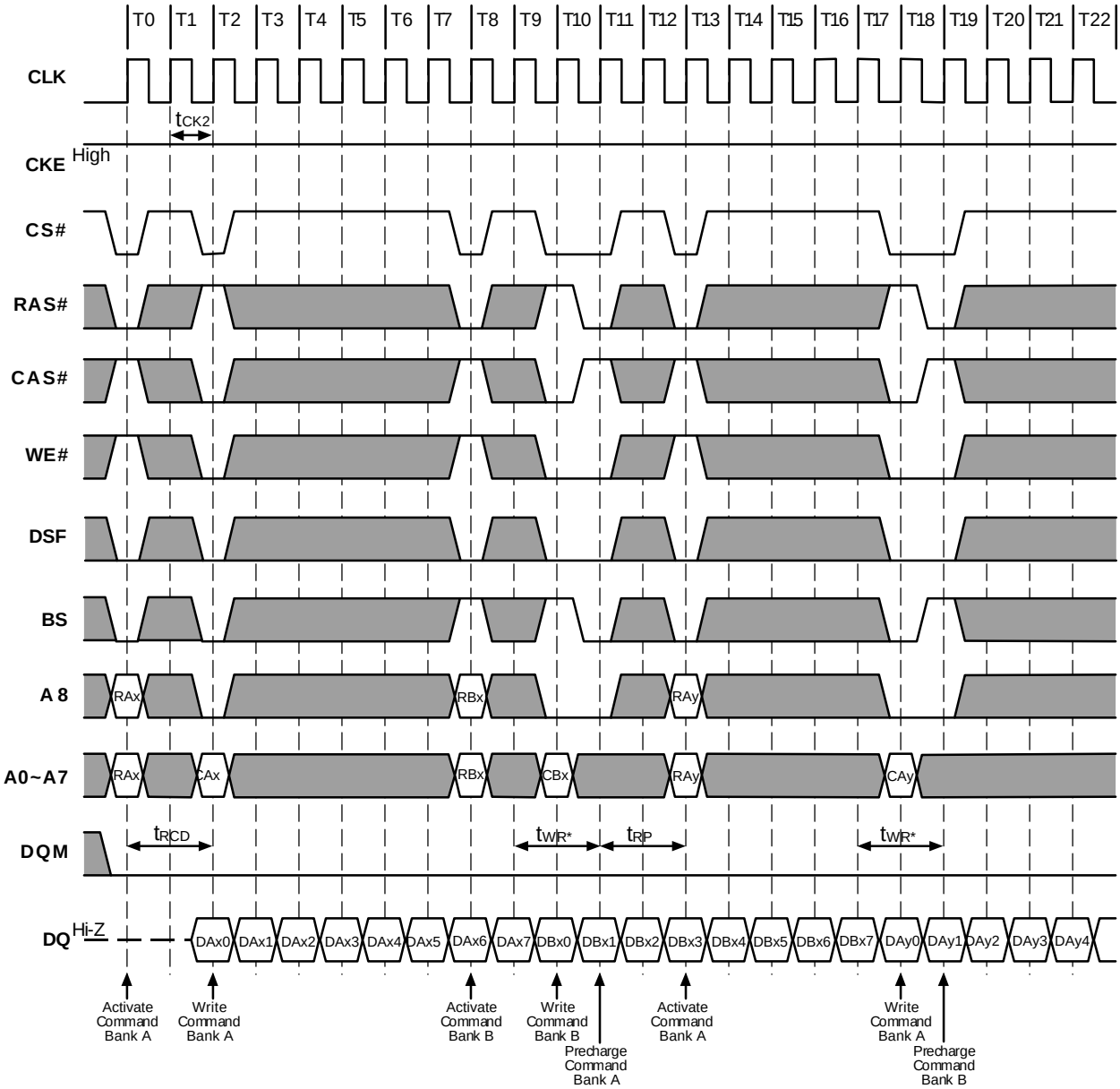

* $t_{WR} > t_{WR}$(min.)

Figure 12.3. Random Row Write (Interleaving Banks)
(Burst Length=8, CAS# Latency=3)

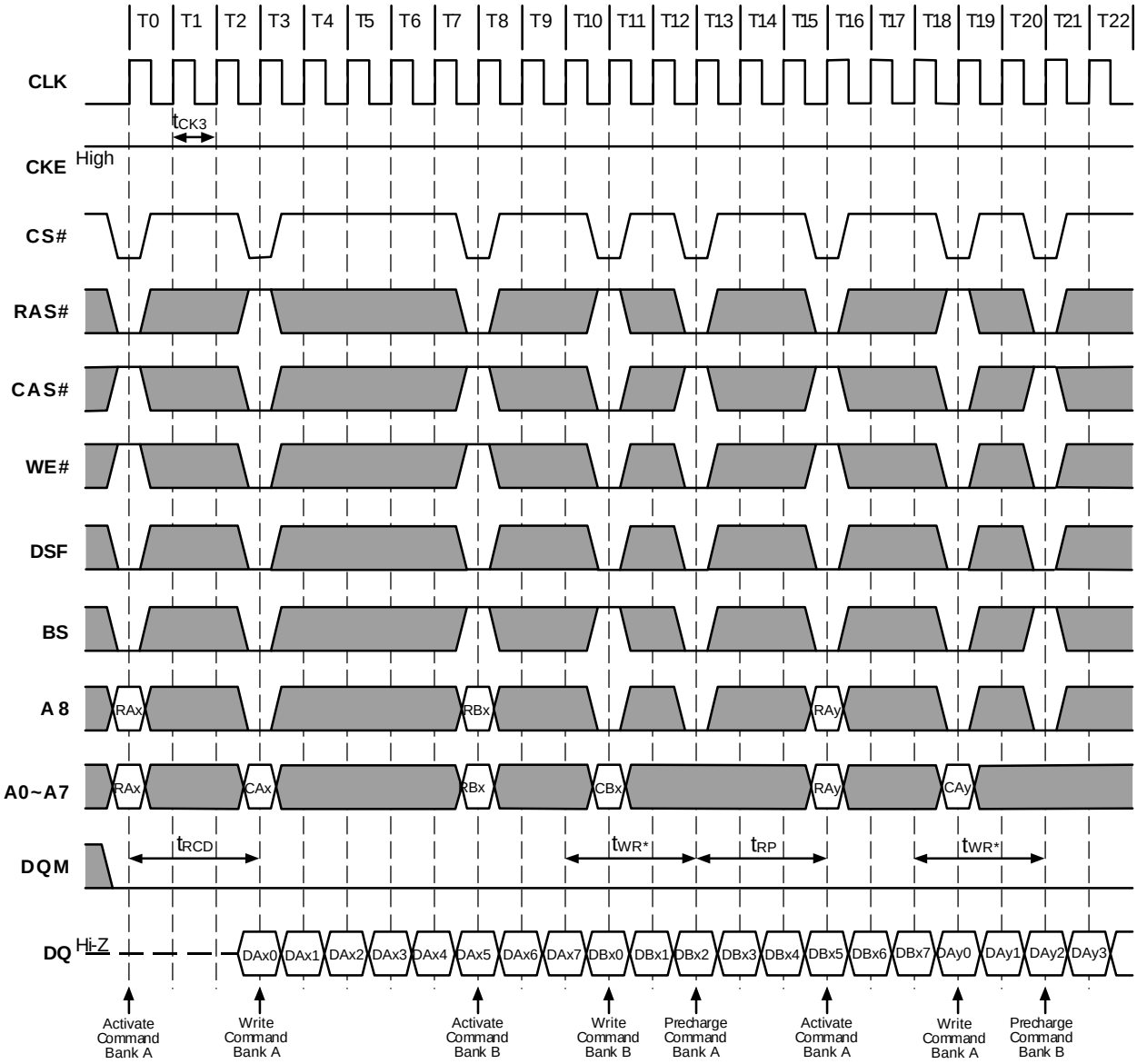

* $t_{WR} > t_{WR}$(min.)

Figure 13.1. Read and Write Cycle (Burst Length=4, CAS# Latency=1)

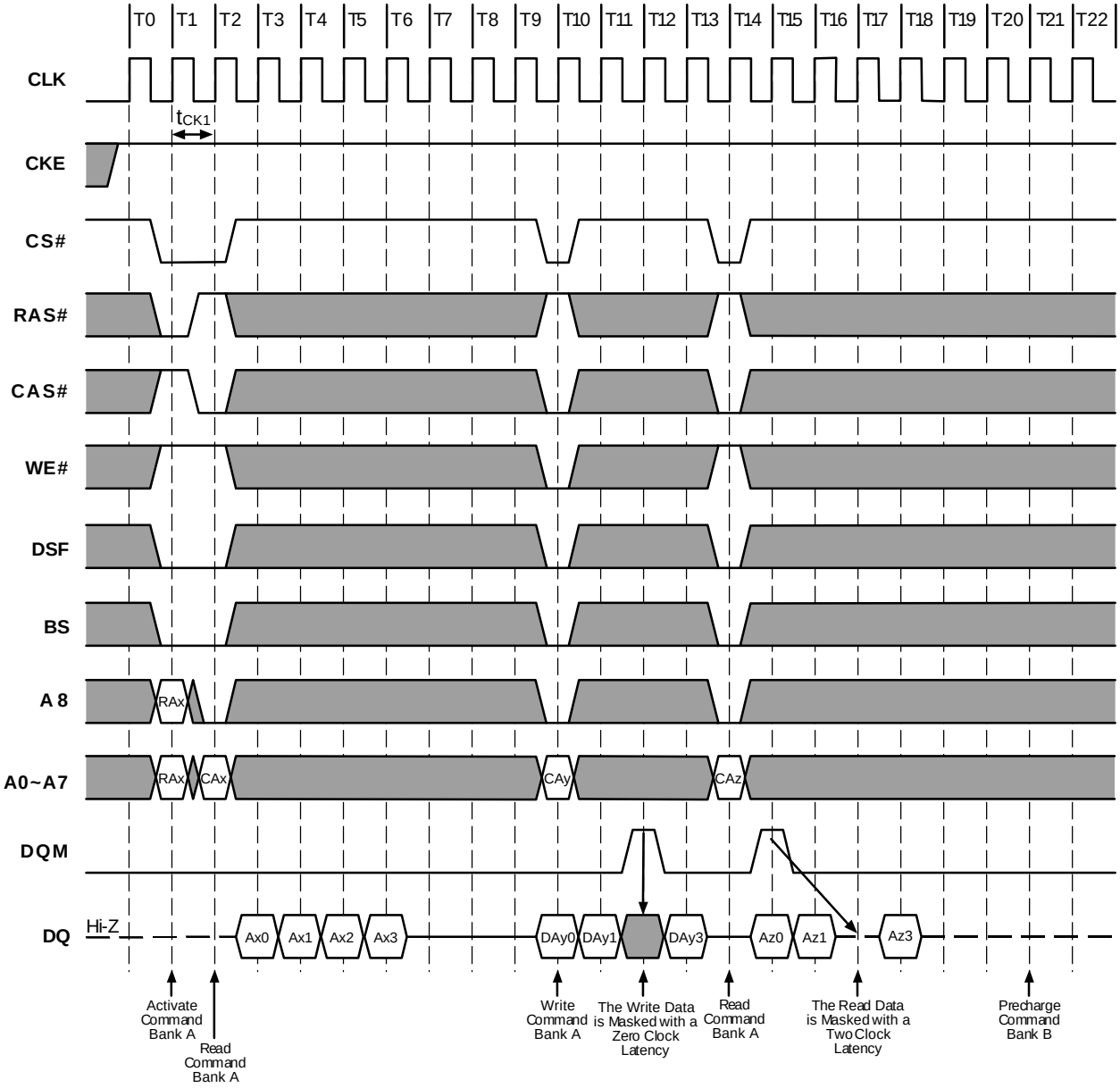

Figure 13.2. Read and Write Cycle (Burst Length=4, CAS# Latency=2)

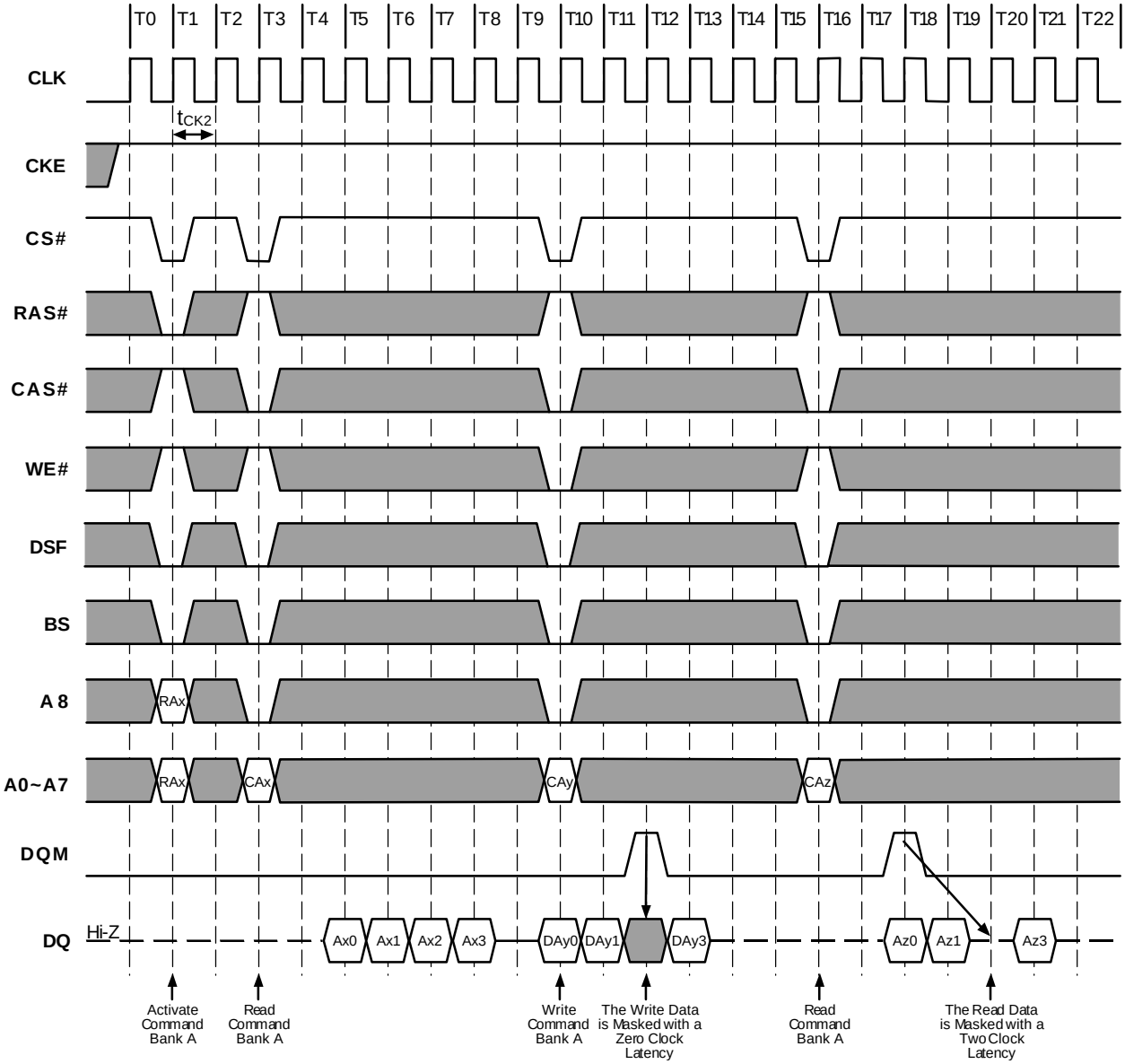

Figure 13.3. Read and Write Cycle (Burst Length=4, CAS# Latency=3)

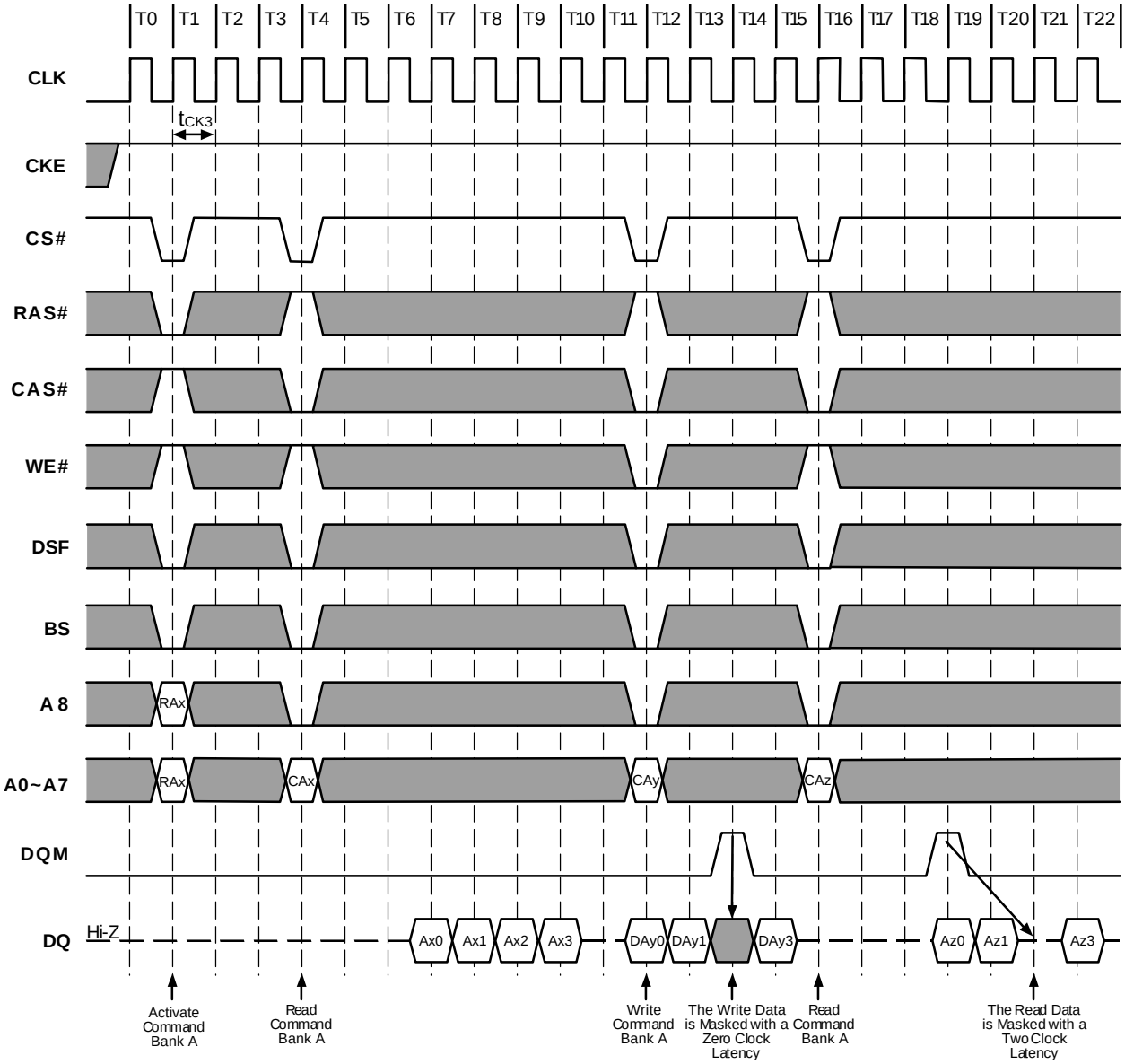

Figure 14.1. Interleaving Column Read Cycle (Burst Length=4, CAS# Latency=1)

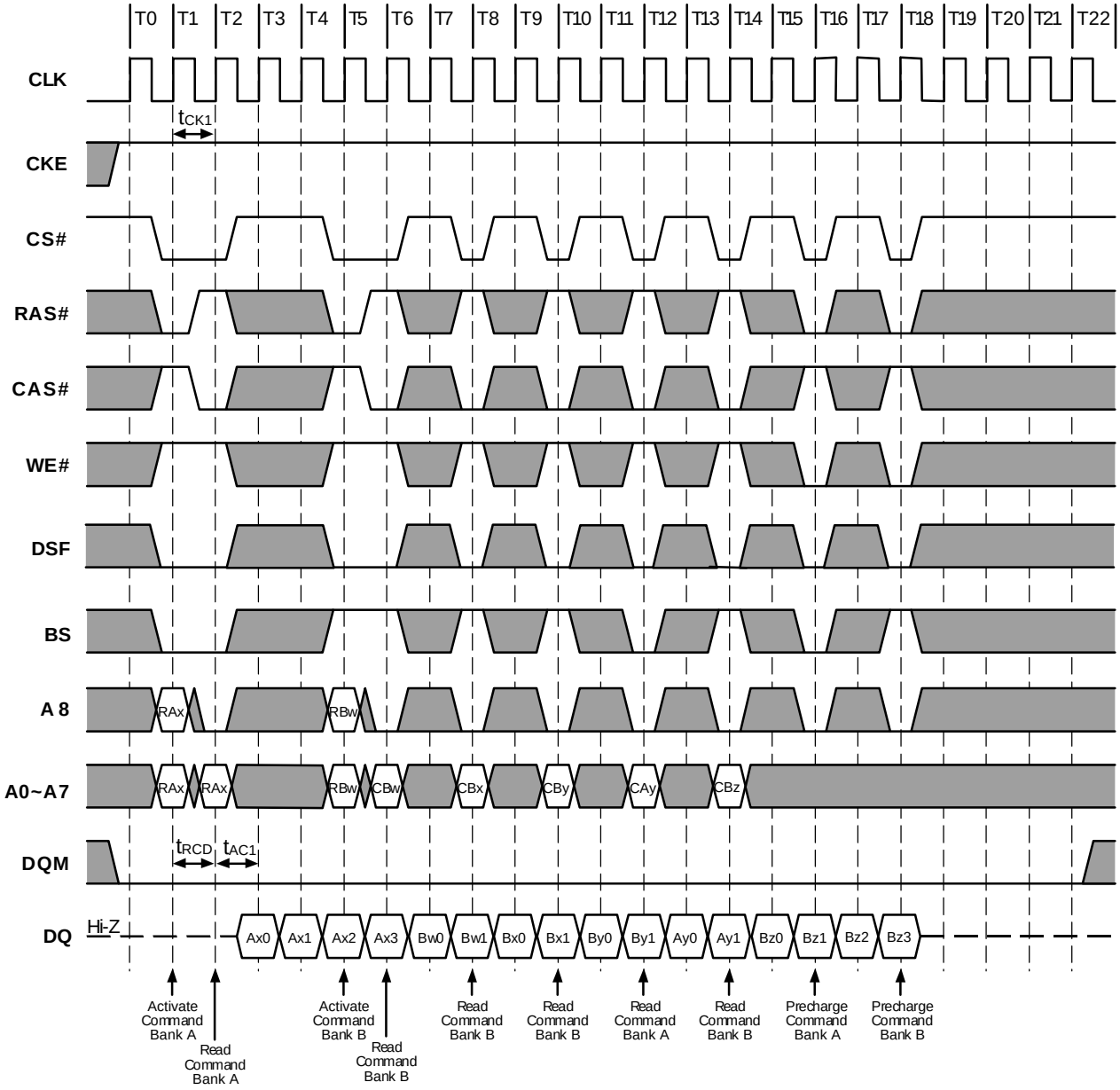

Figure 14.2. Interleaving Column Read Cycle (Burst Length=4, CAS# Latency=2)

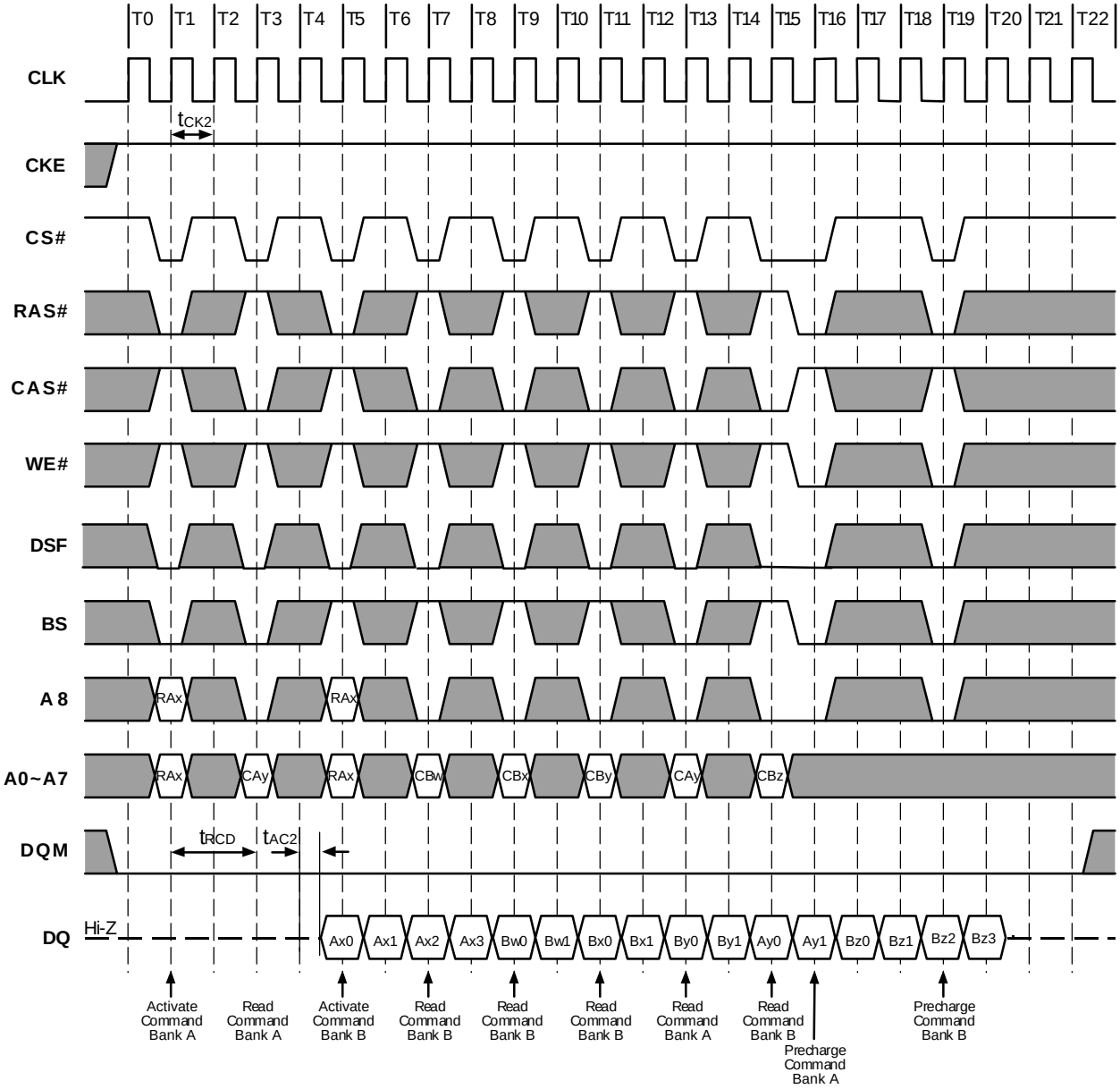

Figure 14.3. Interleaved Column Read Cycle (Burst Length=4, CAS# Latency=3)

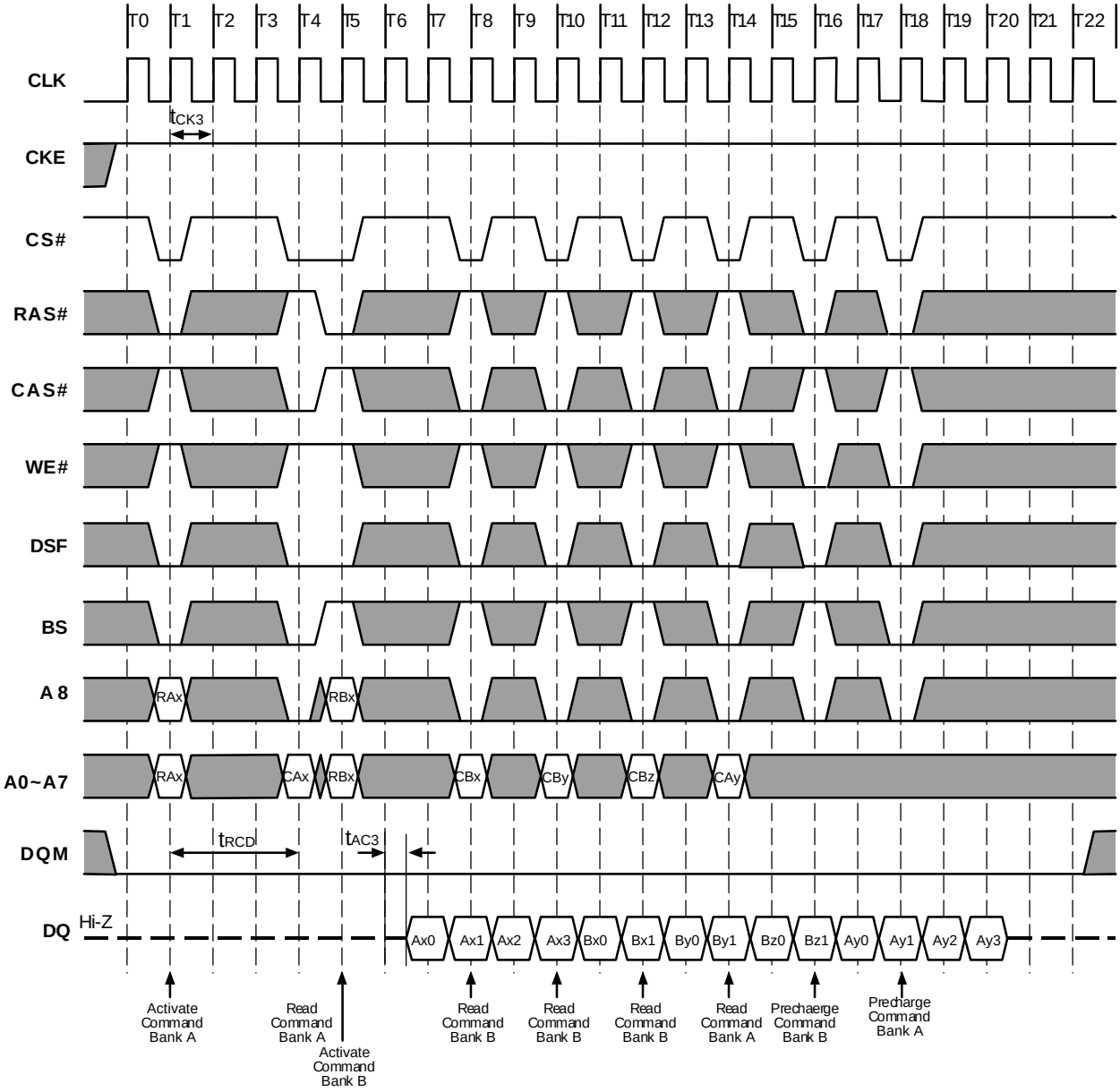

Figure 15.1. Interleaved Column Write Cycle (Burst Length=4, CAS# Latency=1)

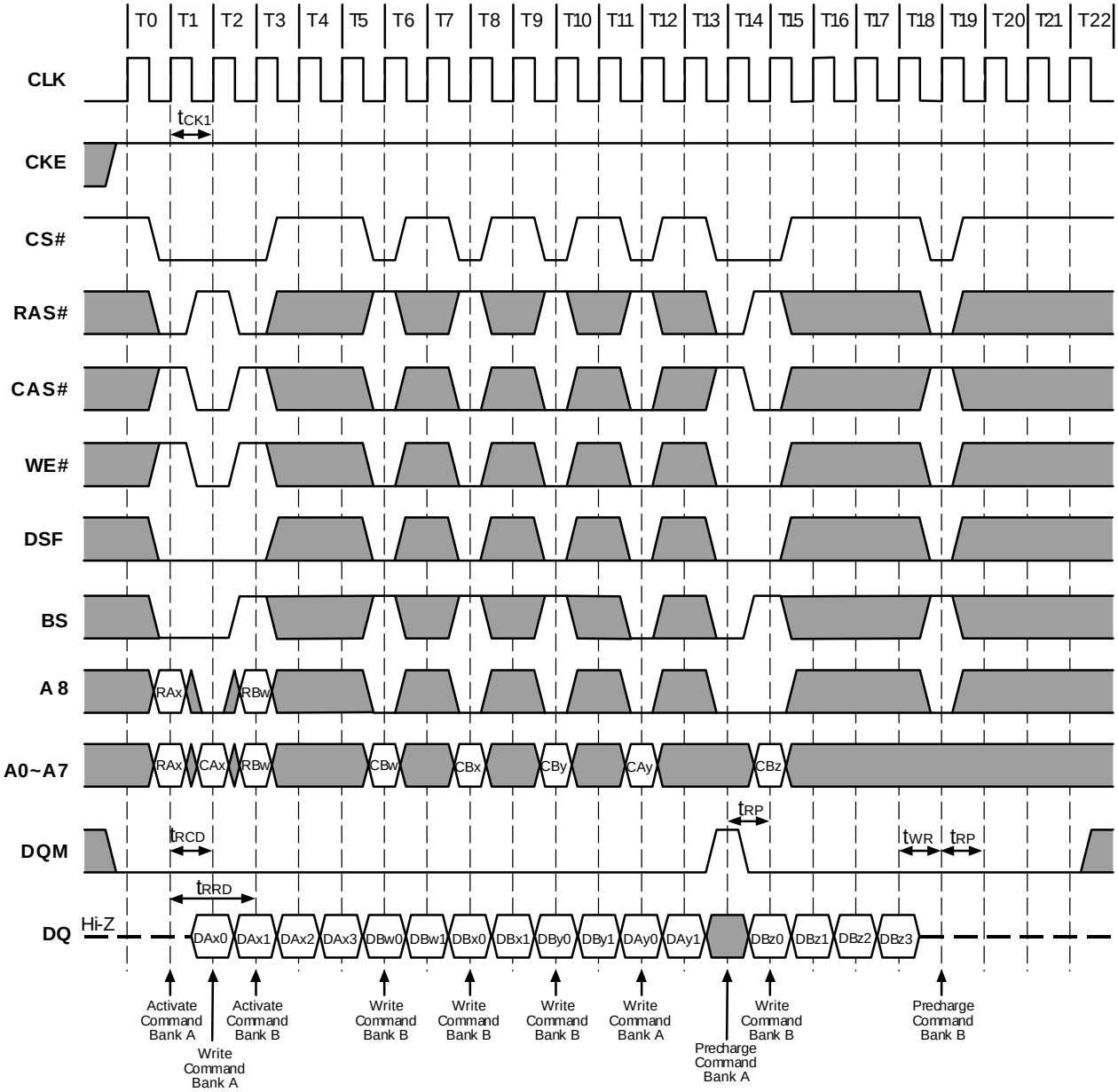

Figure 15.2. Interleaved Column Write Cycle (Burst Length=4, CAS# Latency=2)

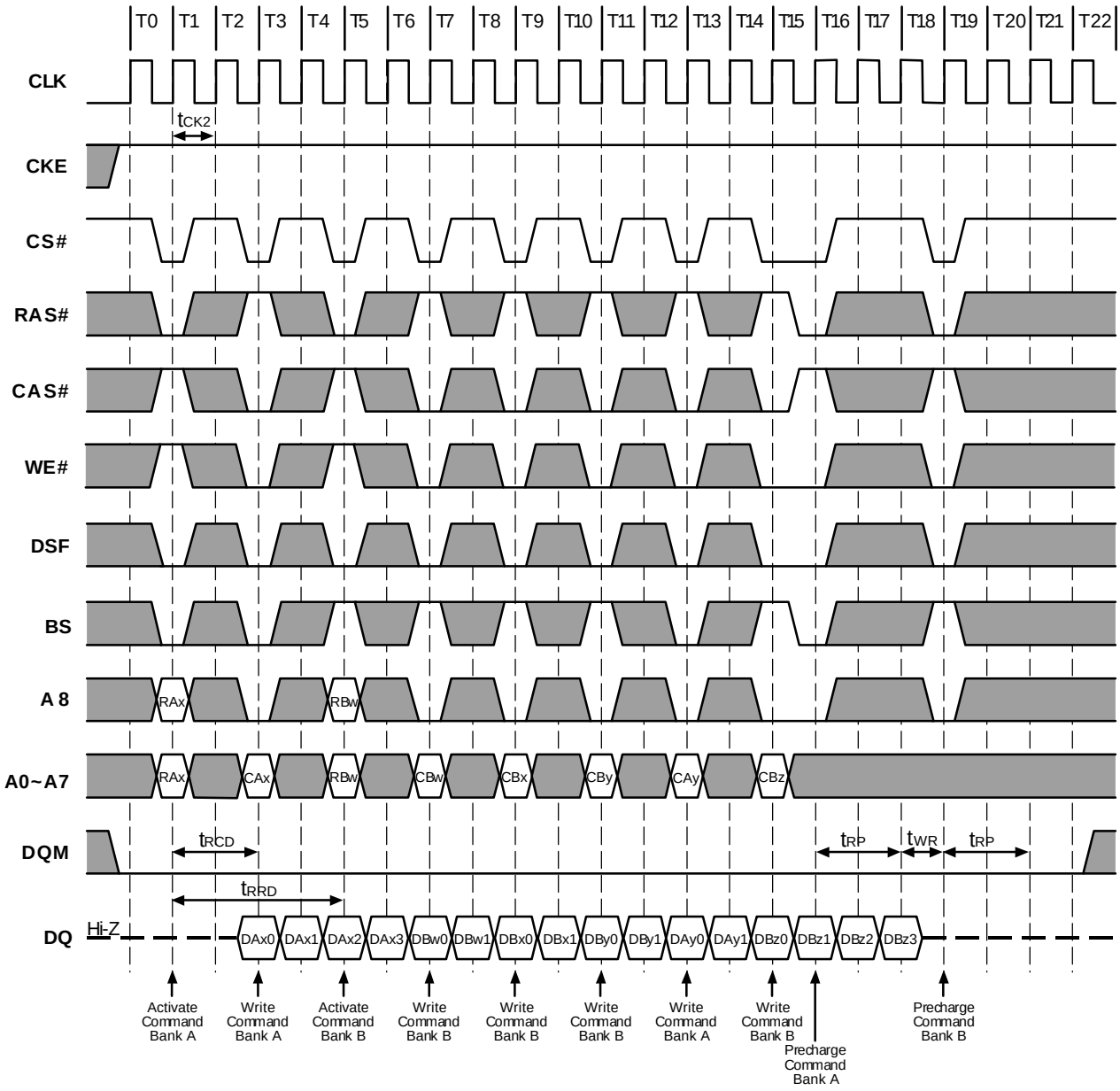

Figure 15.3. Interleaved Column Write Cycle (Burst Length=4, CAS# Latency=3)

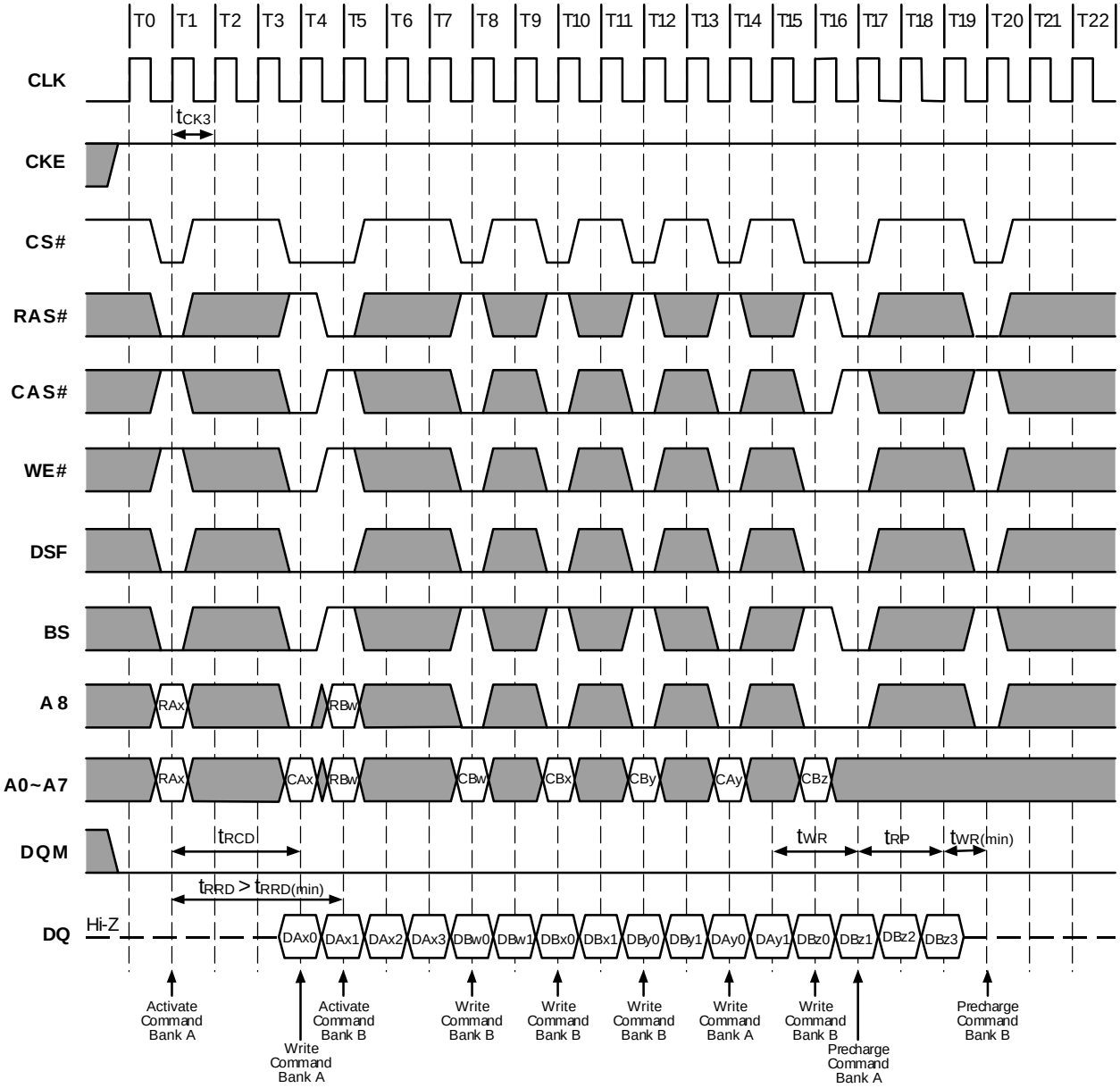

Figure 16.1. Auto Precharge after Read Burst (Burst Length=4, CAS# Latency=1)

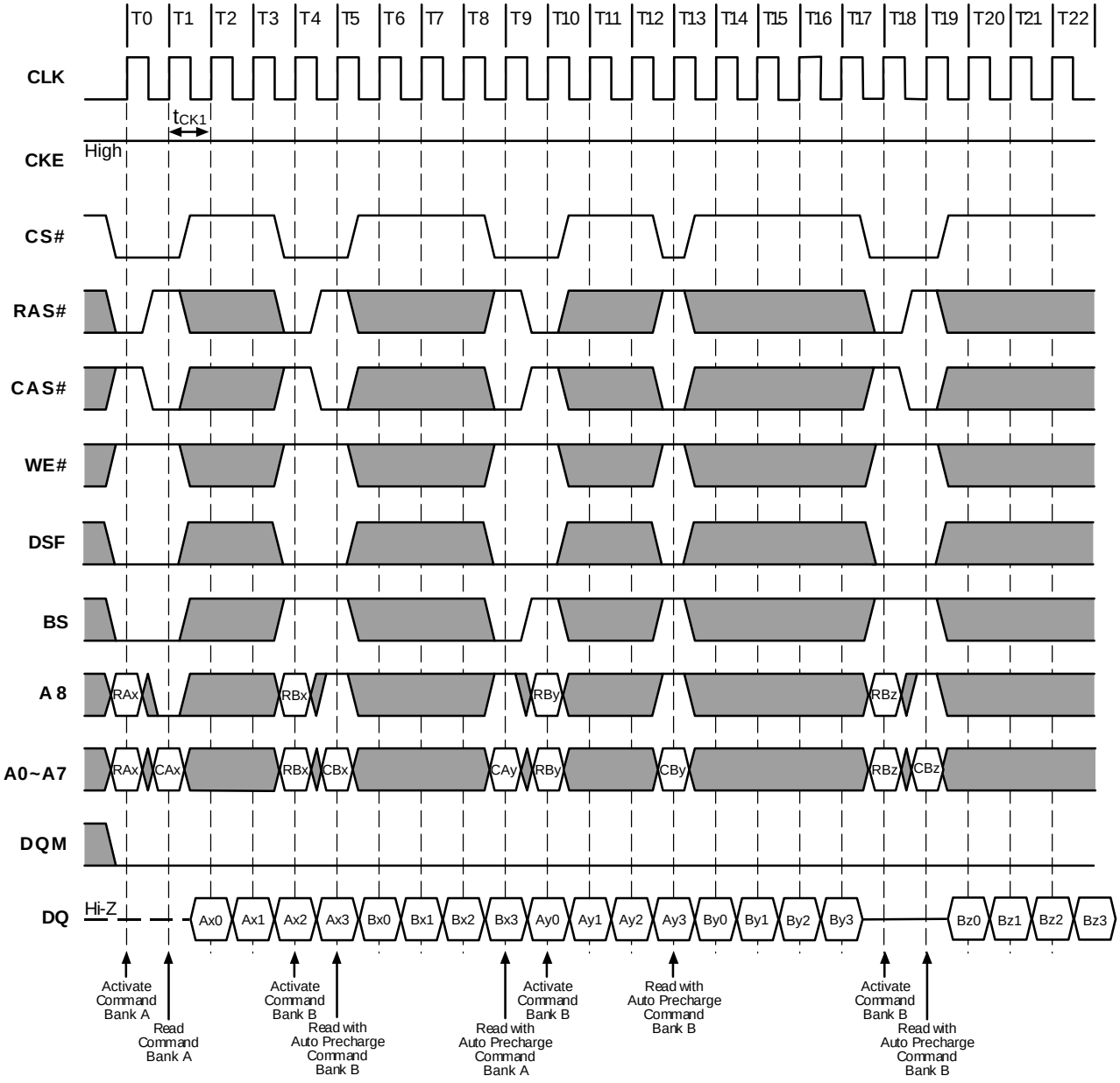

Figure 16.2. Auto Precharge after Read Burst (Burst Length=4, CAS# Latency=2)

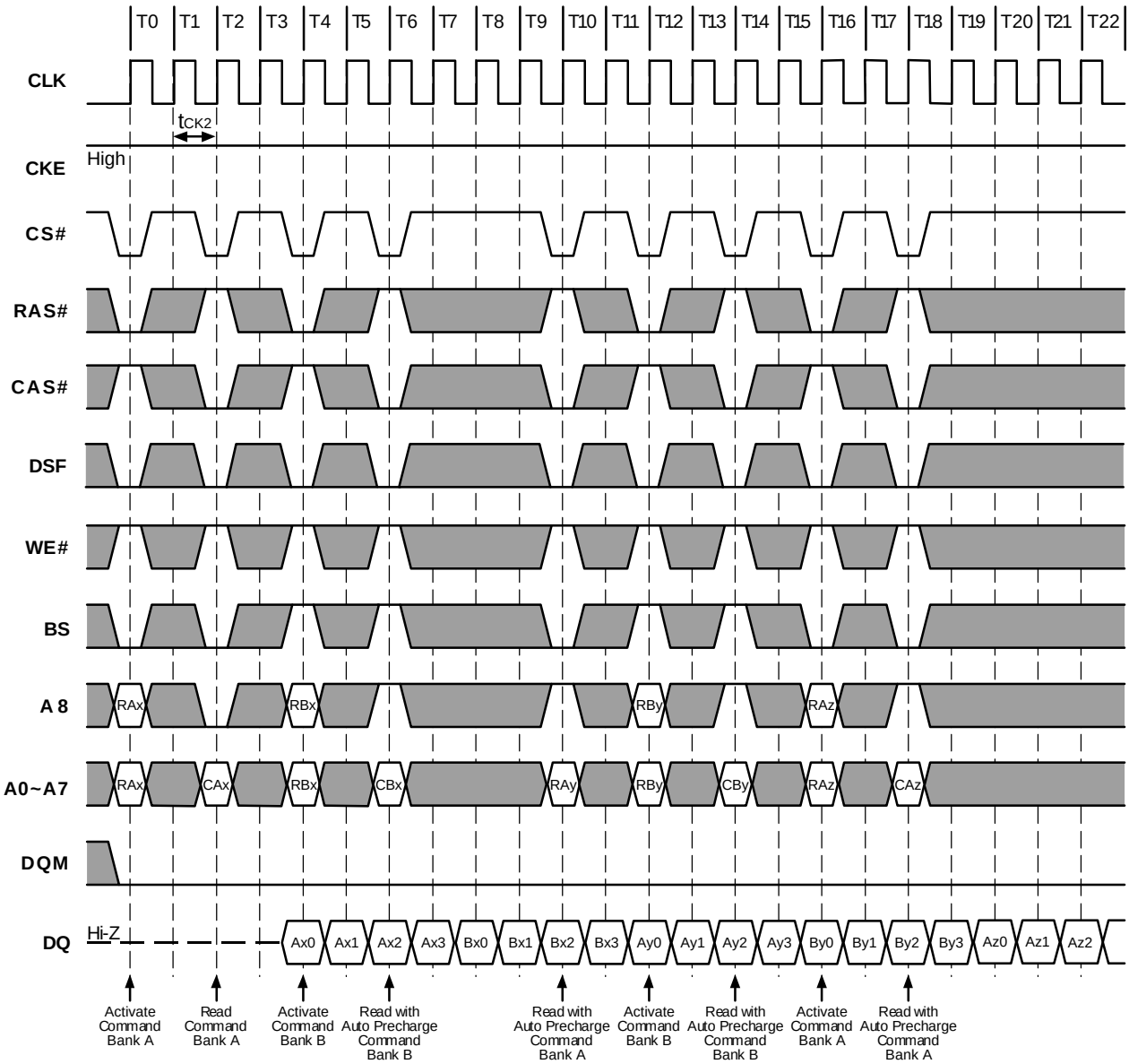

Figure 16.3. Auto Precharge after Read Burst (Burst Length=4, CAS# Latency=3)

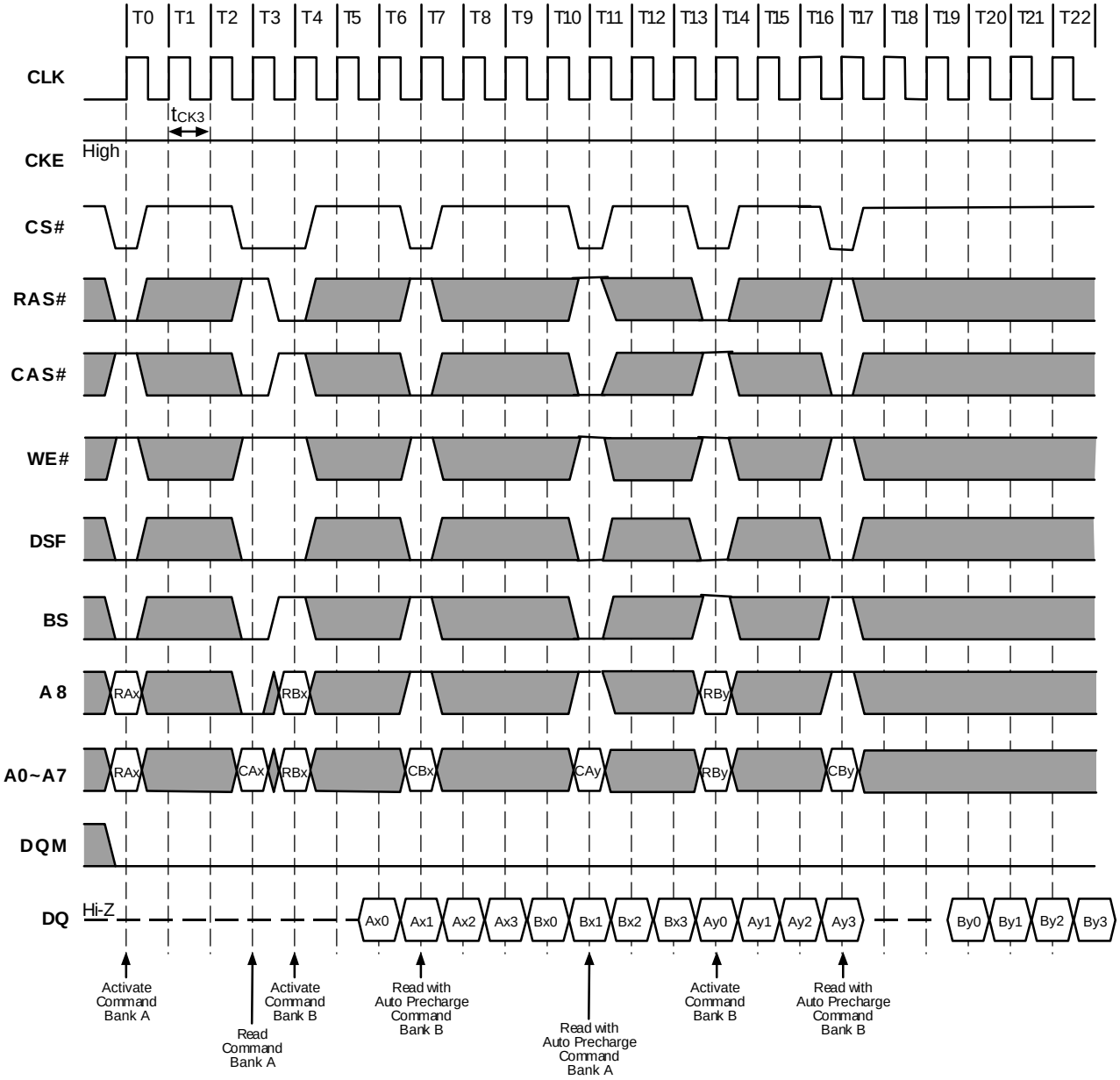

Figure 17.1. Auto Precharge after Write Burst (Burst Length=4, CAS# Latency=1)

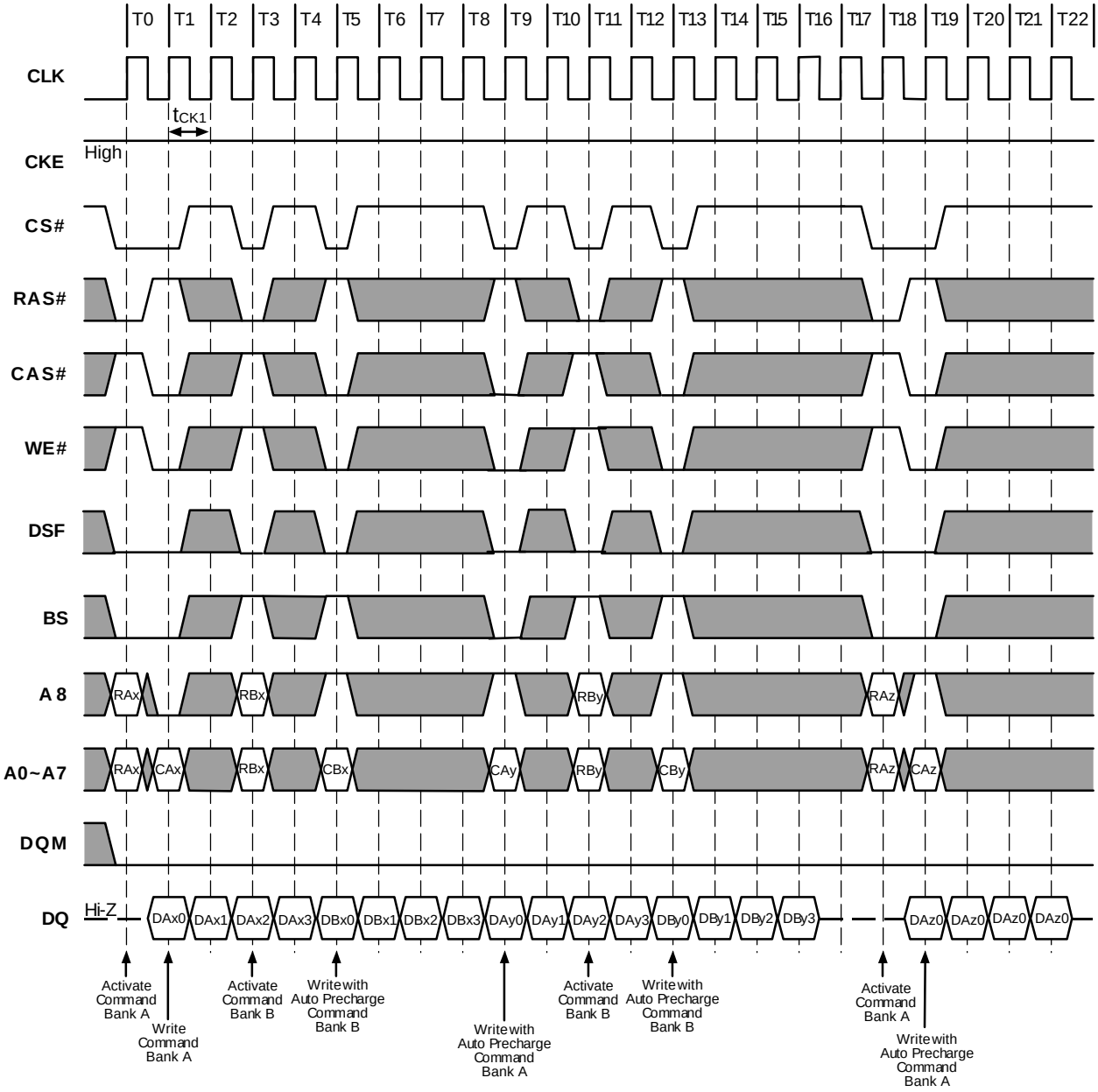

Figure 17.2. Auto Precharge after Write Burst (Burst Length=4, CAS# Latency=2)

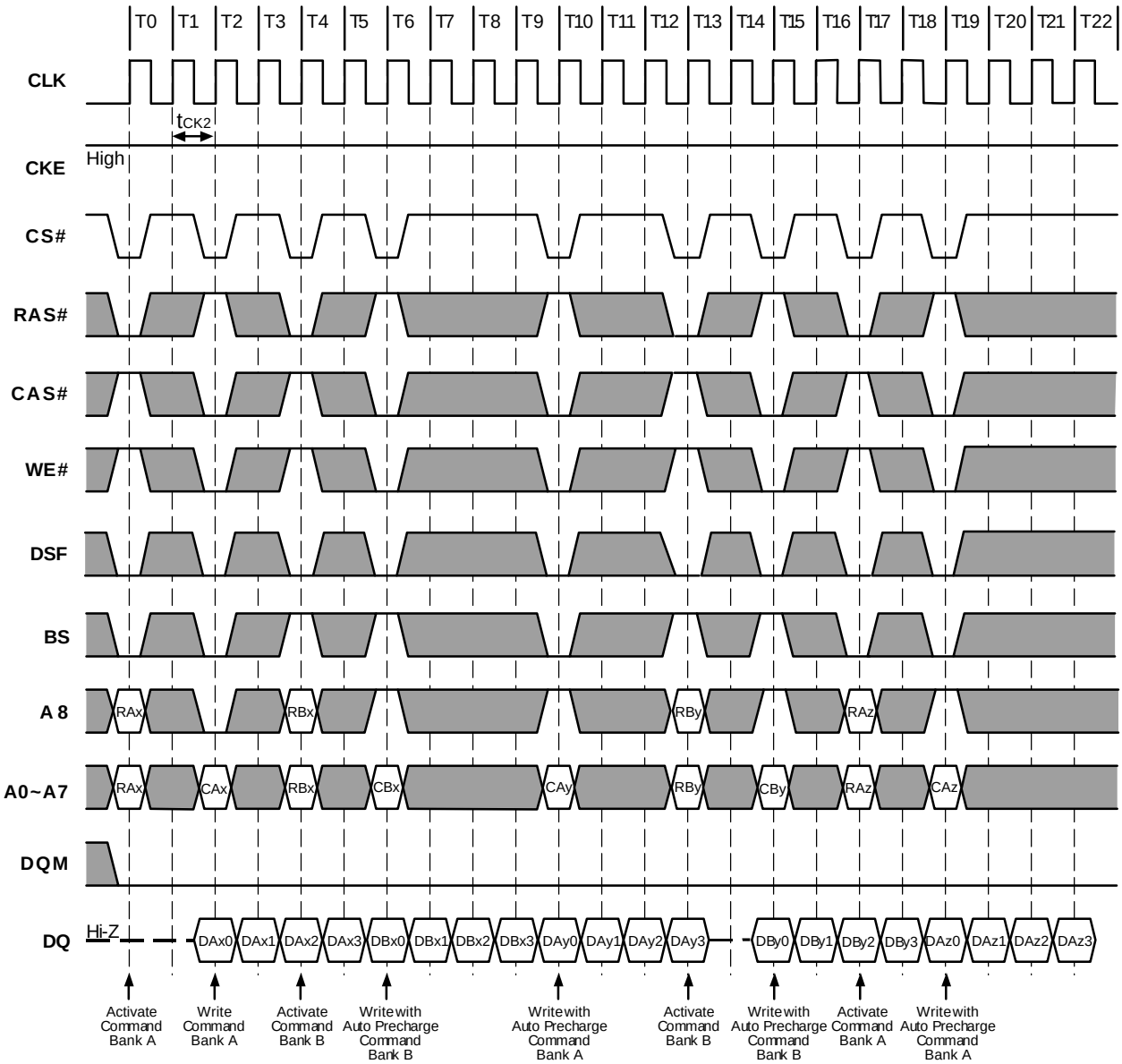

Figure 17.3. Auto Precharge after Write Burst (Burst Length=4, CAS# Latency=3)

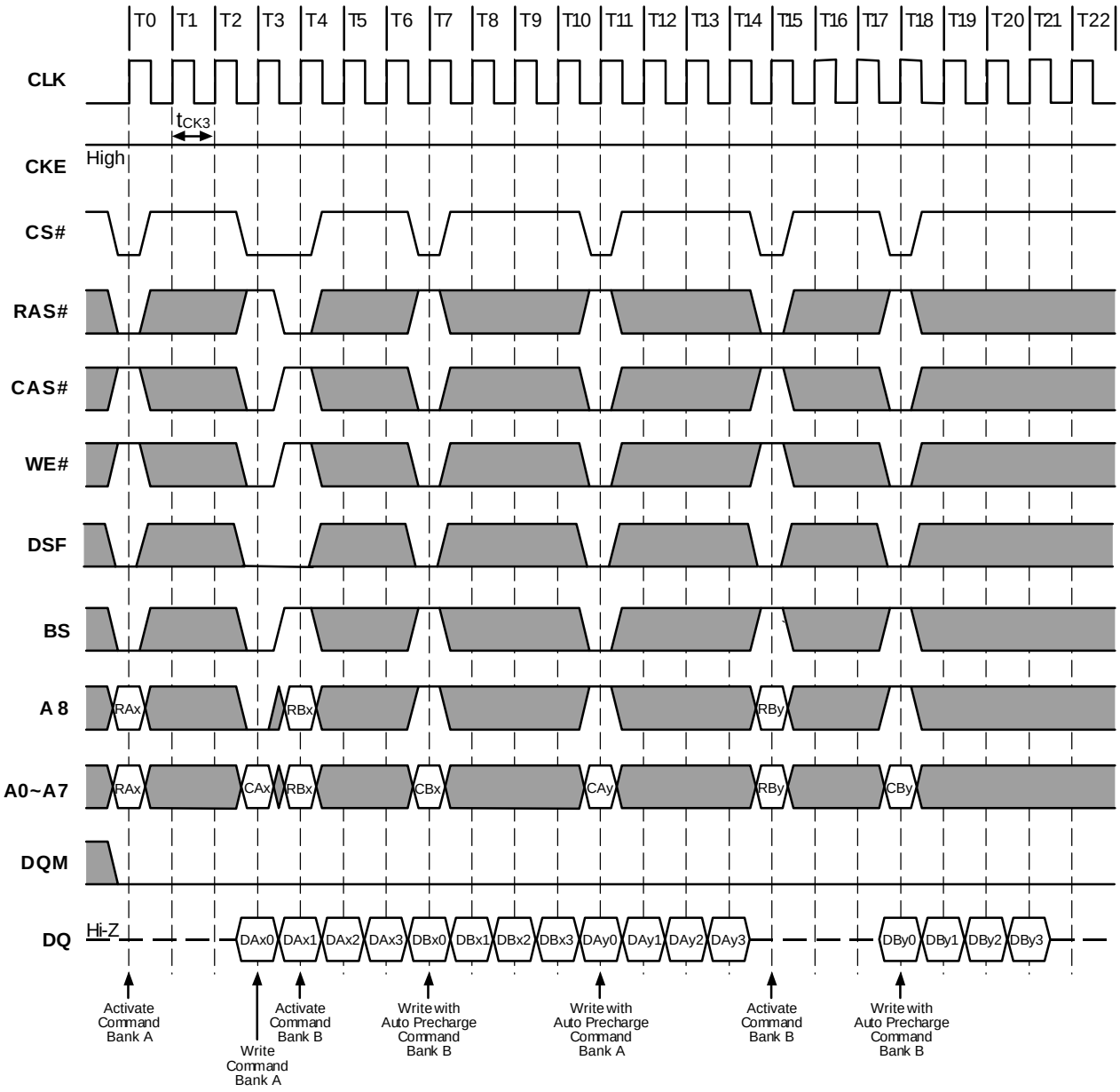

Figure 18.1. Full Page Read Cycle (Burst Length=Full Page, CAS# Latency=1)

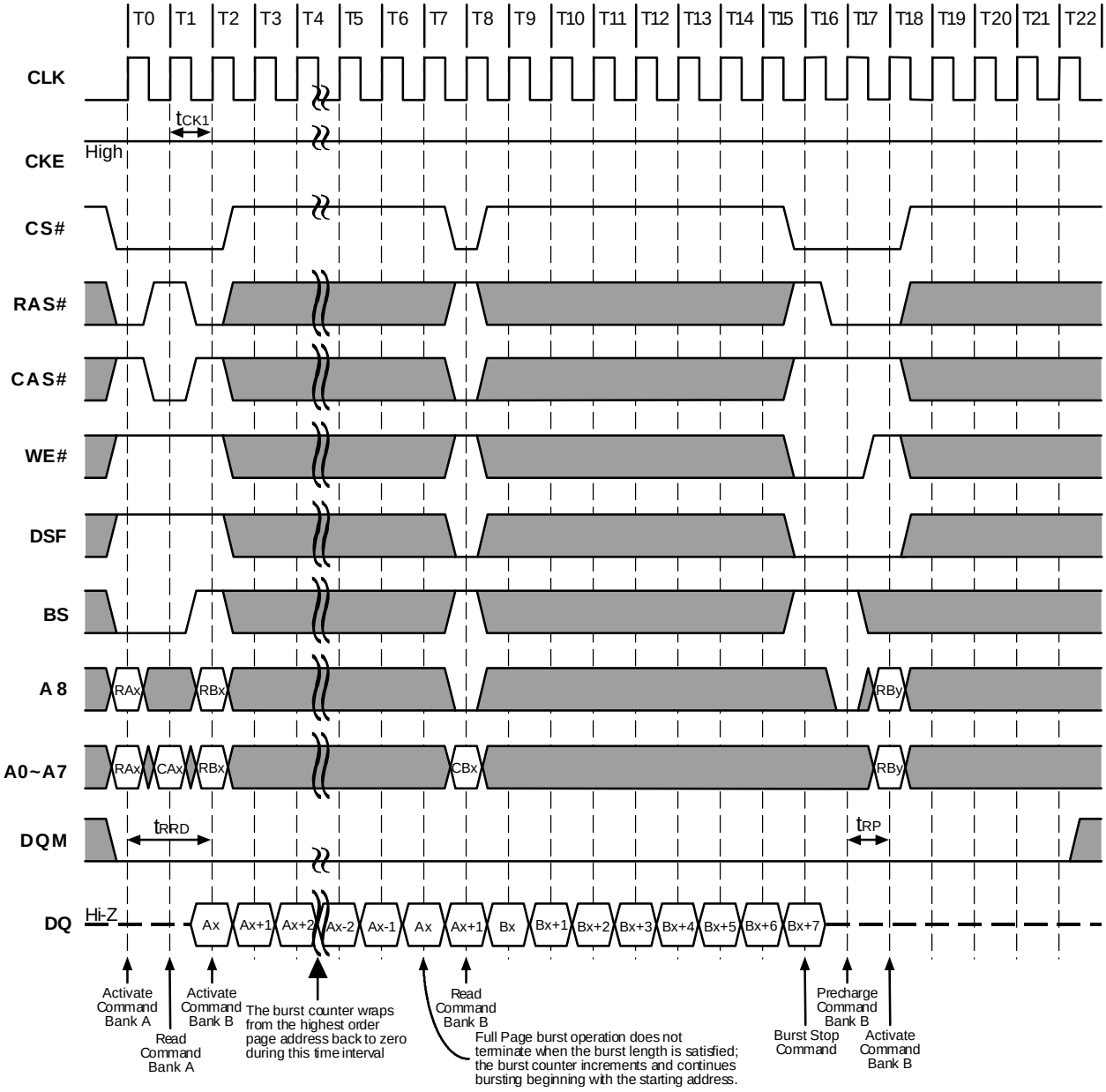

Figure 18.2. Full Page Read Cycle (Burst Length=Full Page, CAS# Latency=2)

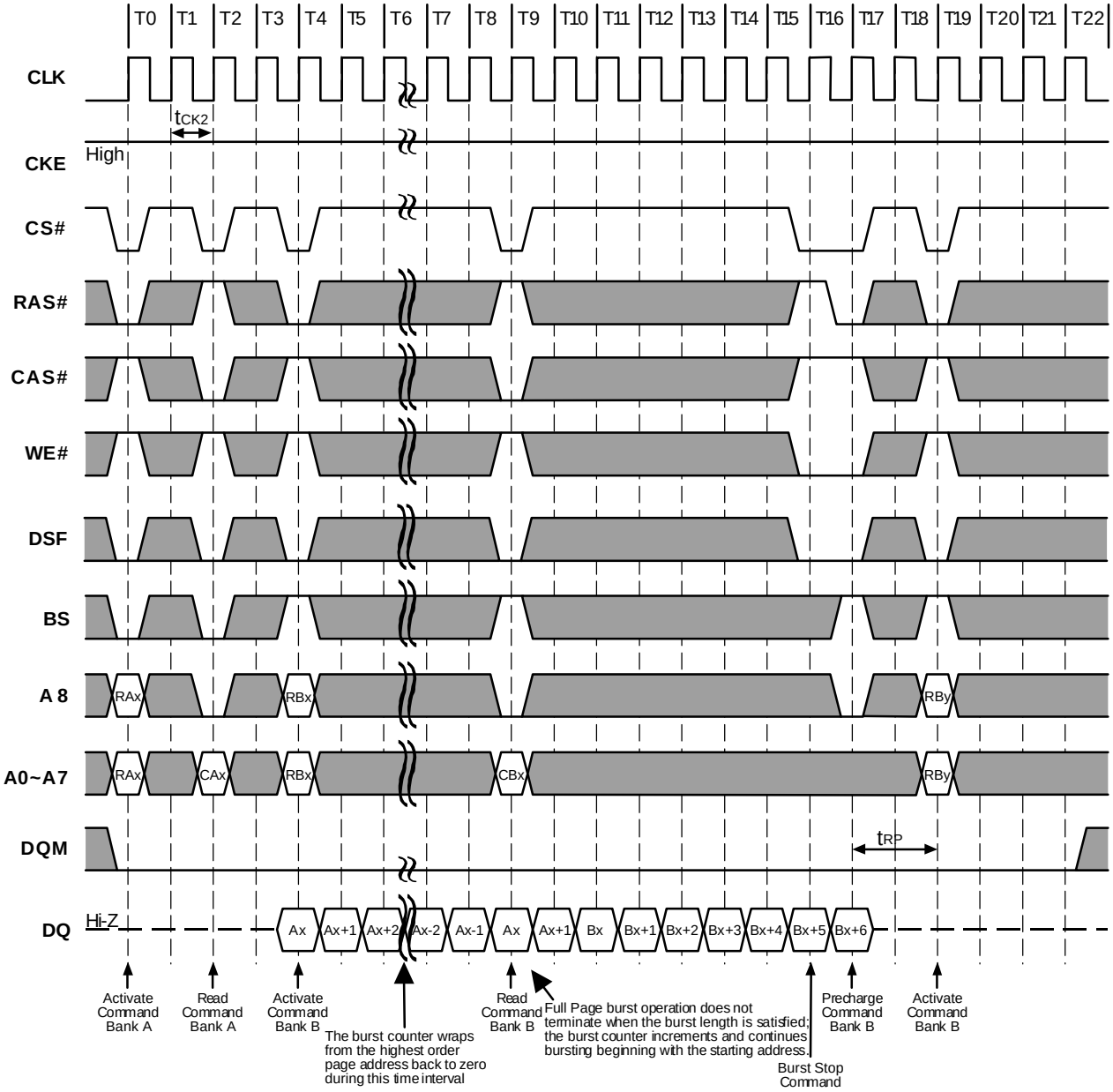

Figure 18.3. Full Page Read Cycle (Burst Length=Full Page, CAS# Latency=3)

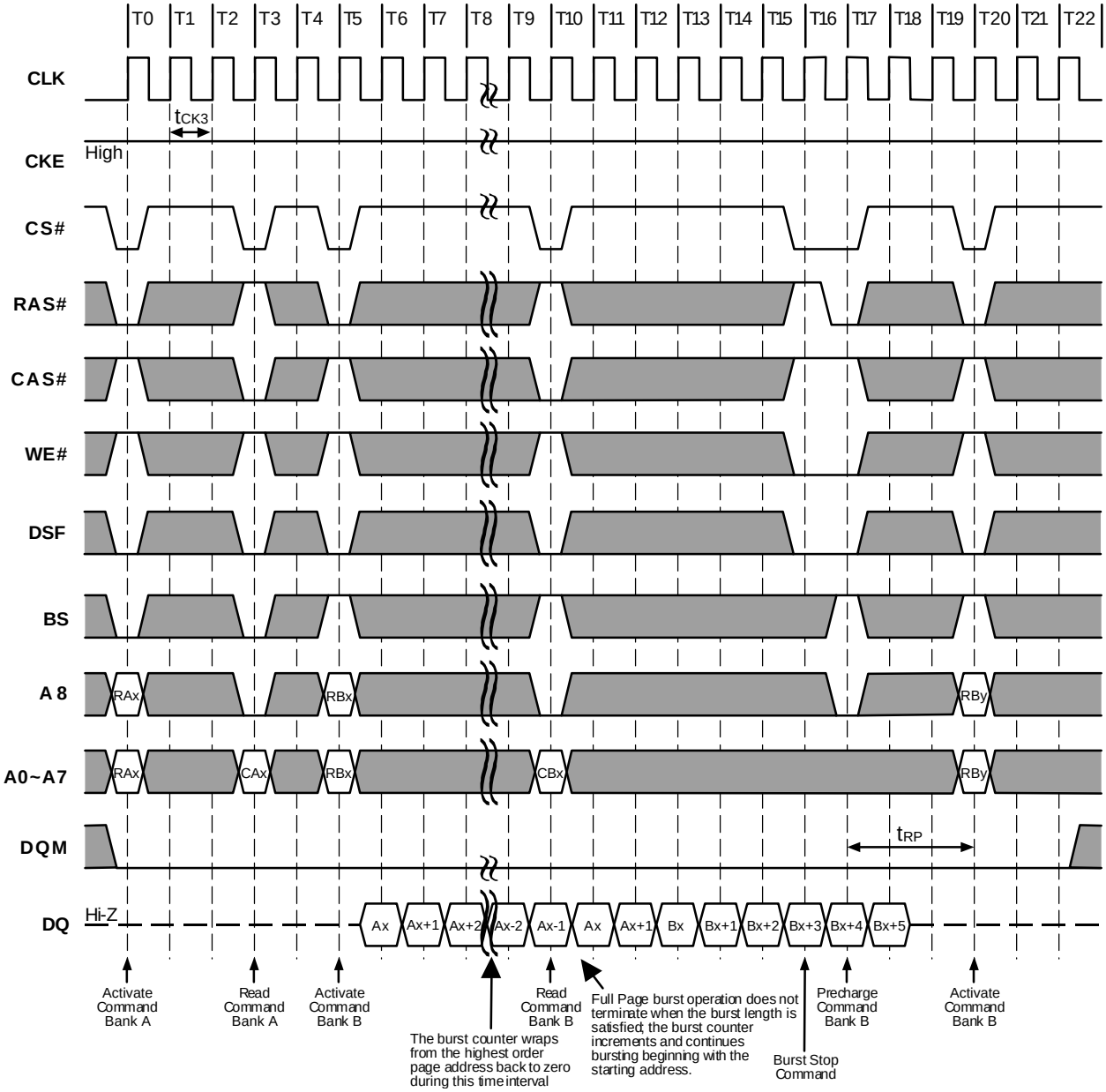

Figure 19.1. Full Page Write Cycle (Burst Length=Full Page, CAS# Latency=1)

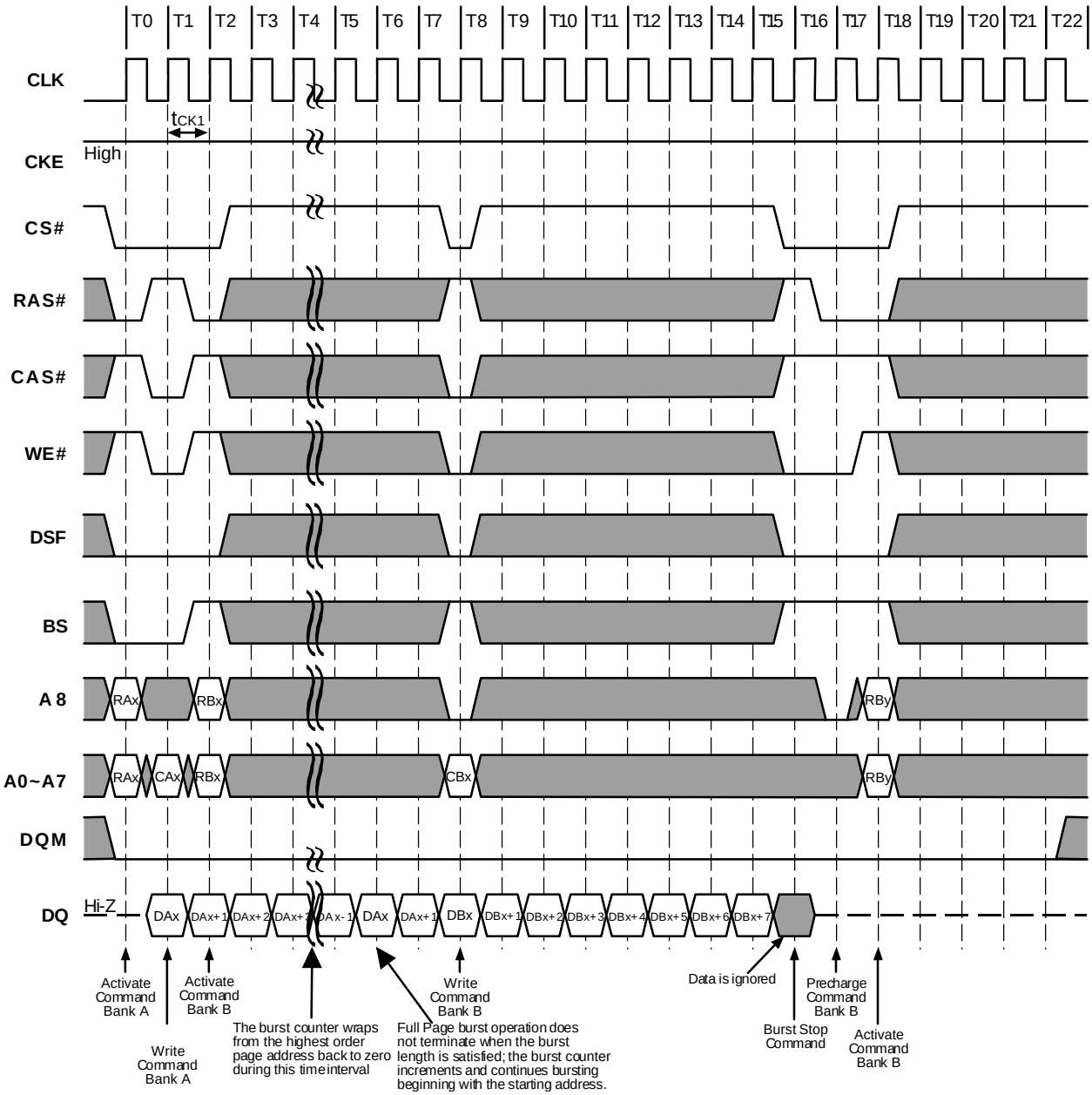

Figure 19.2. Full Page Write Cycle (Burst Length=Full Page, CAS# Latency=2)

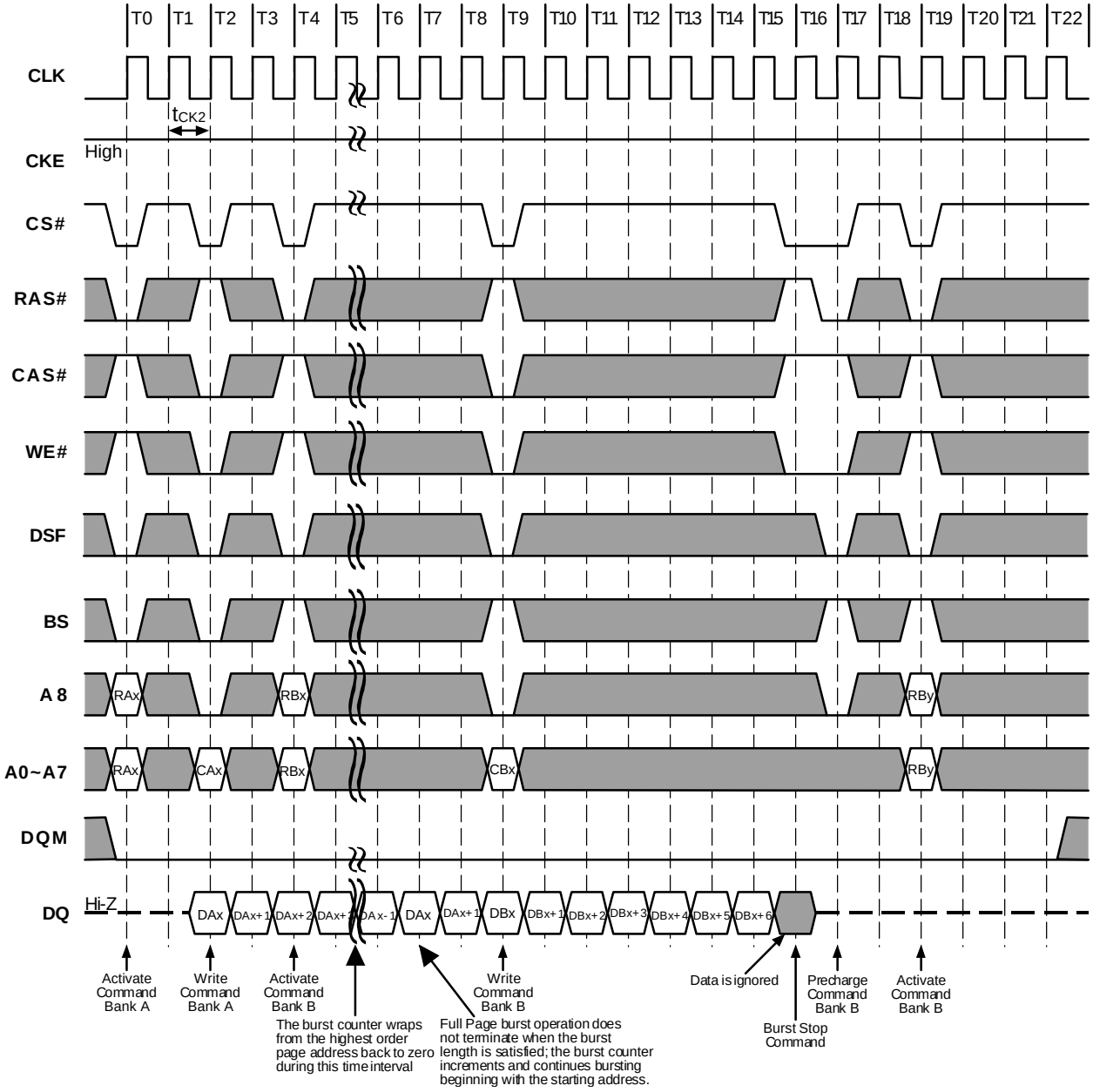

Figure 19.3. Full Page Write Cycle (Burst Length=Full Page, CAS# Latency=3)

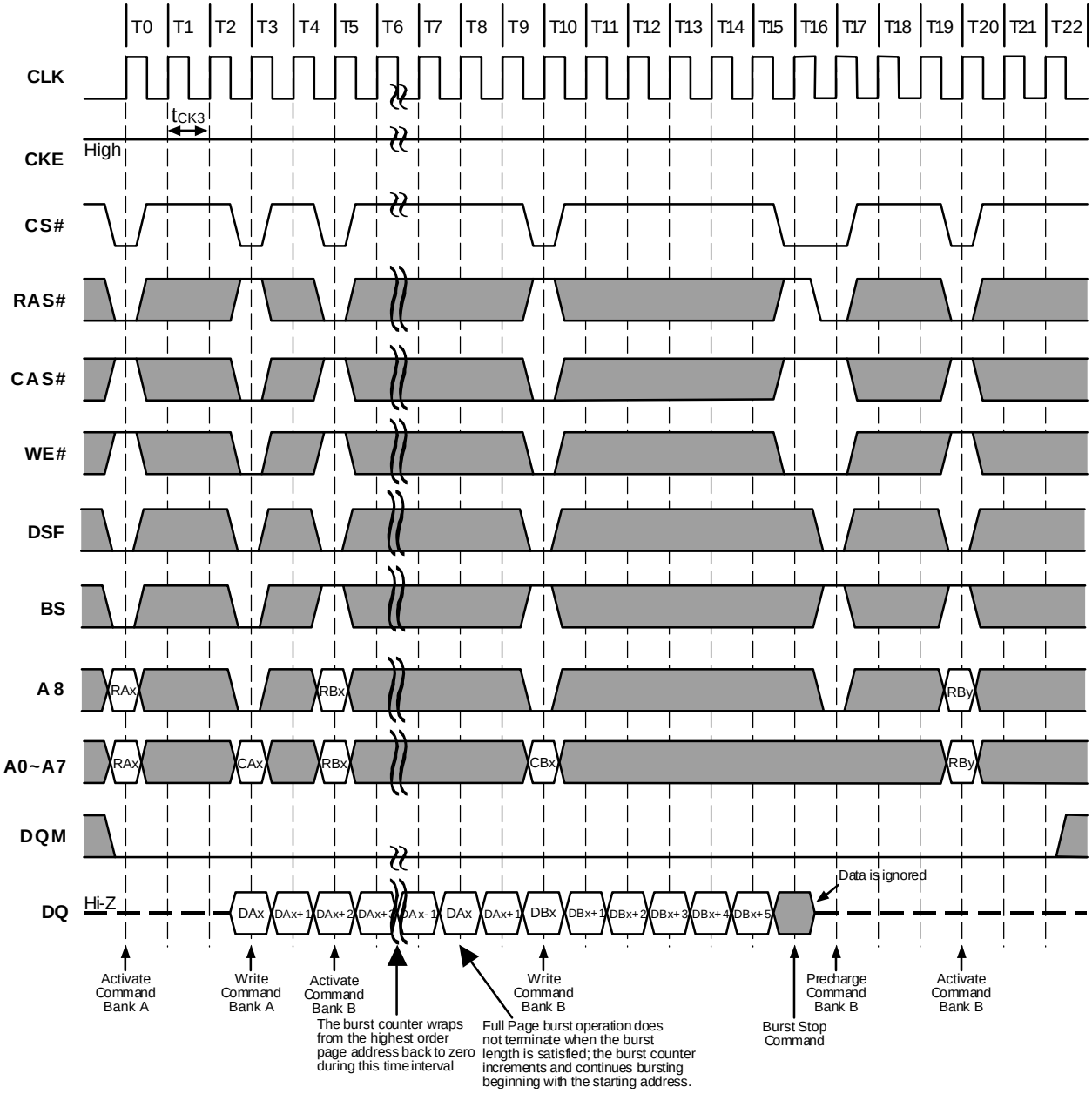

Figure 20. Byte Write Operation (Burst Length=4, CAS# Latency=2)

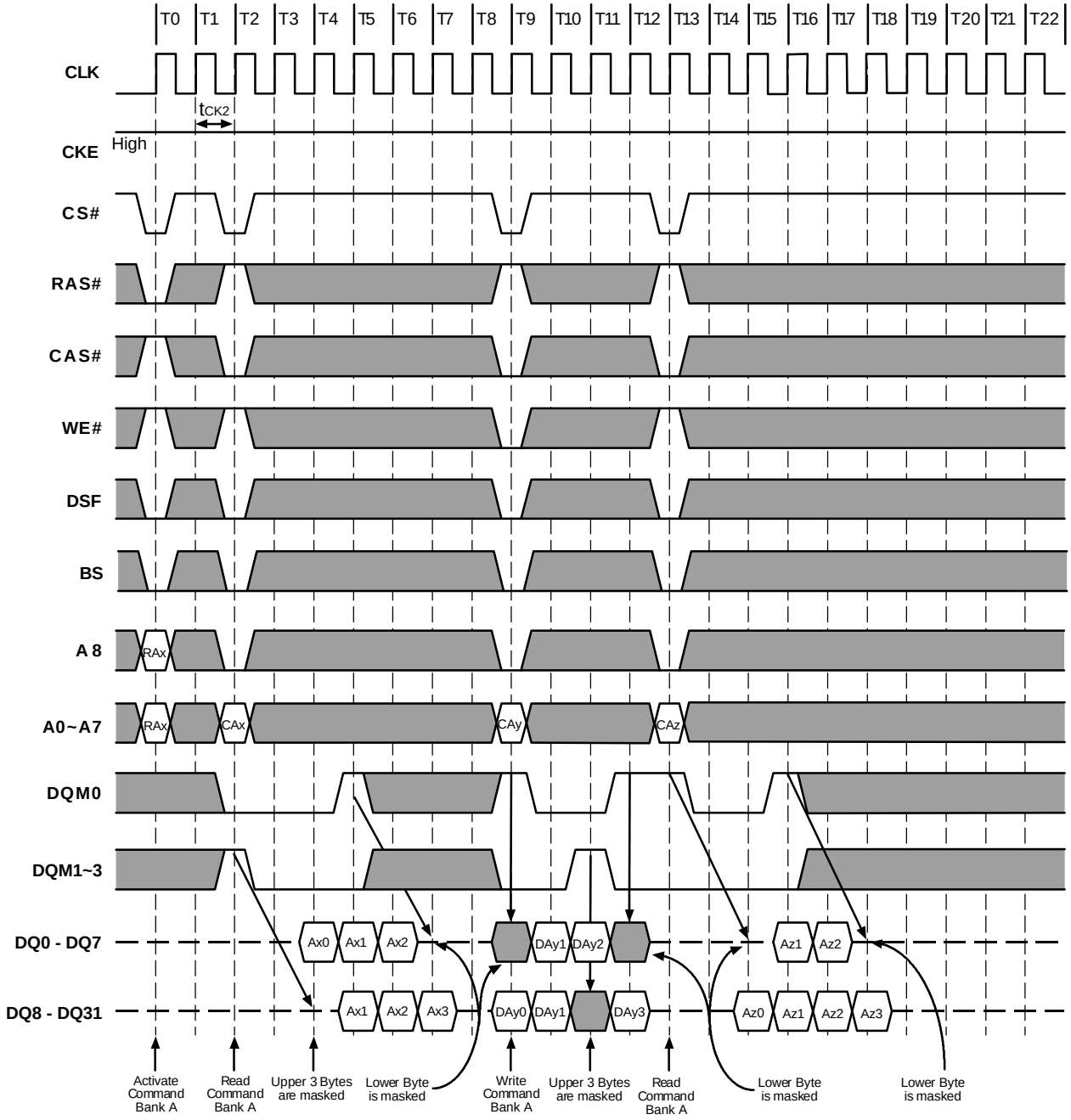

Figure 21. Burst Read and Single Write Operation (Burst Length=4, CAS# Latency=2)

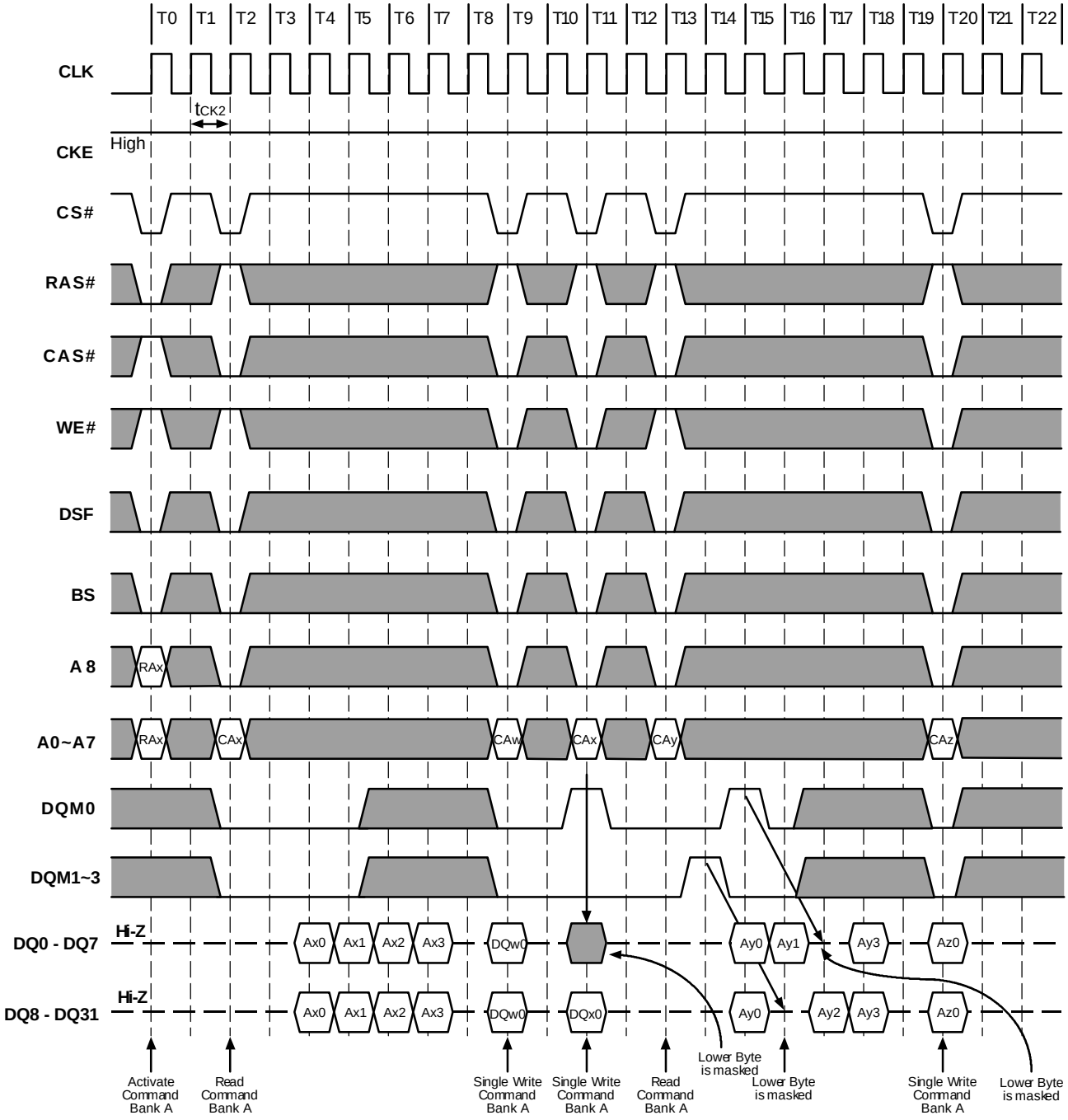

Figure 22. Full Page Burst Read and Single Write Operation
(Burst Length=Full Page, CAS# Latency=3)

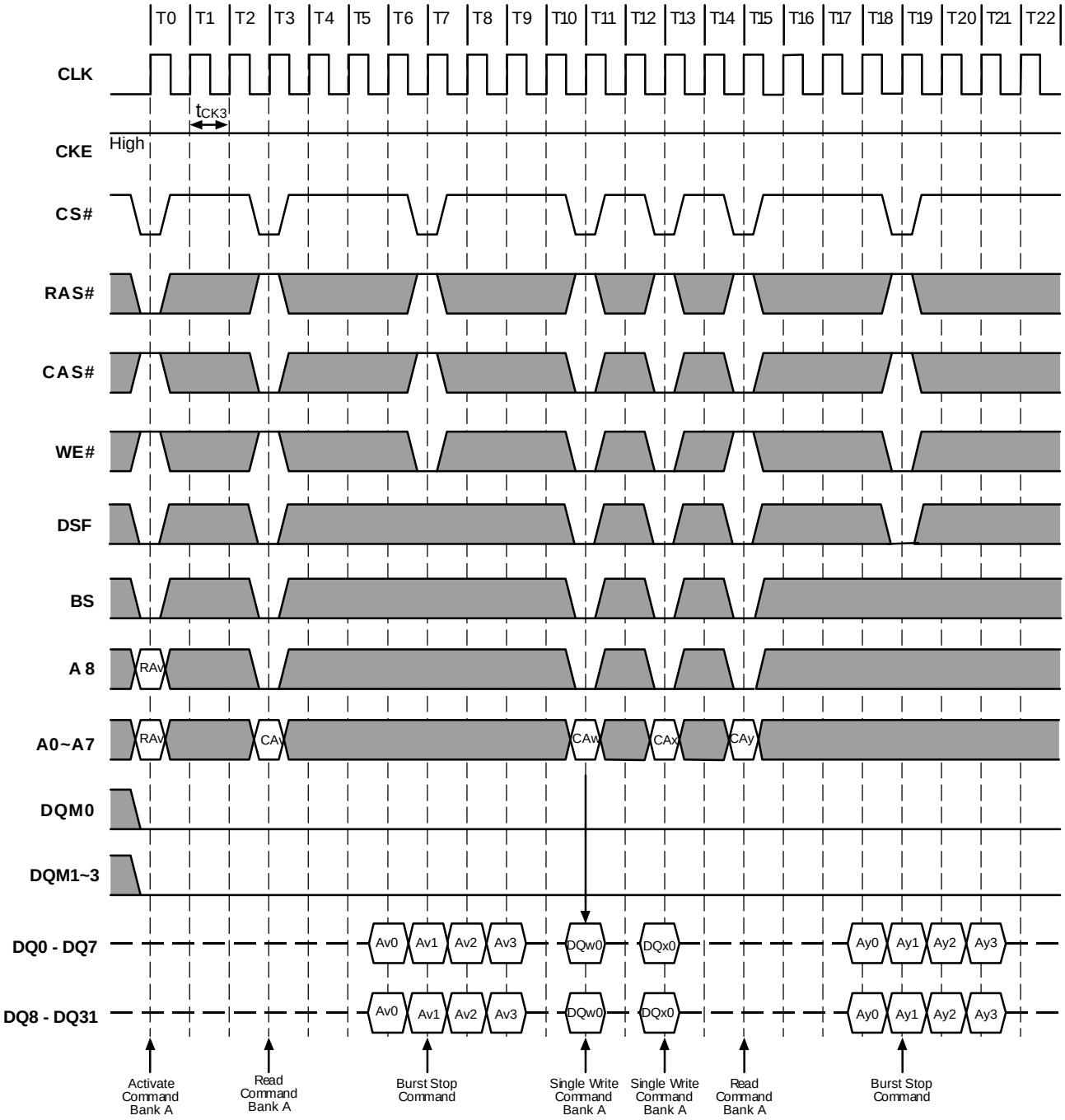

Figure 23. Random Row Read (Interleaving Banks)

(Burst Length=2, CAS# Latency=1)

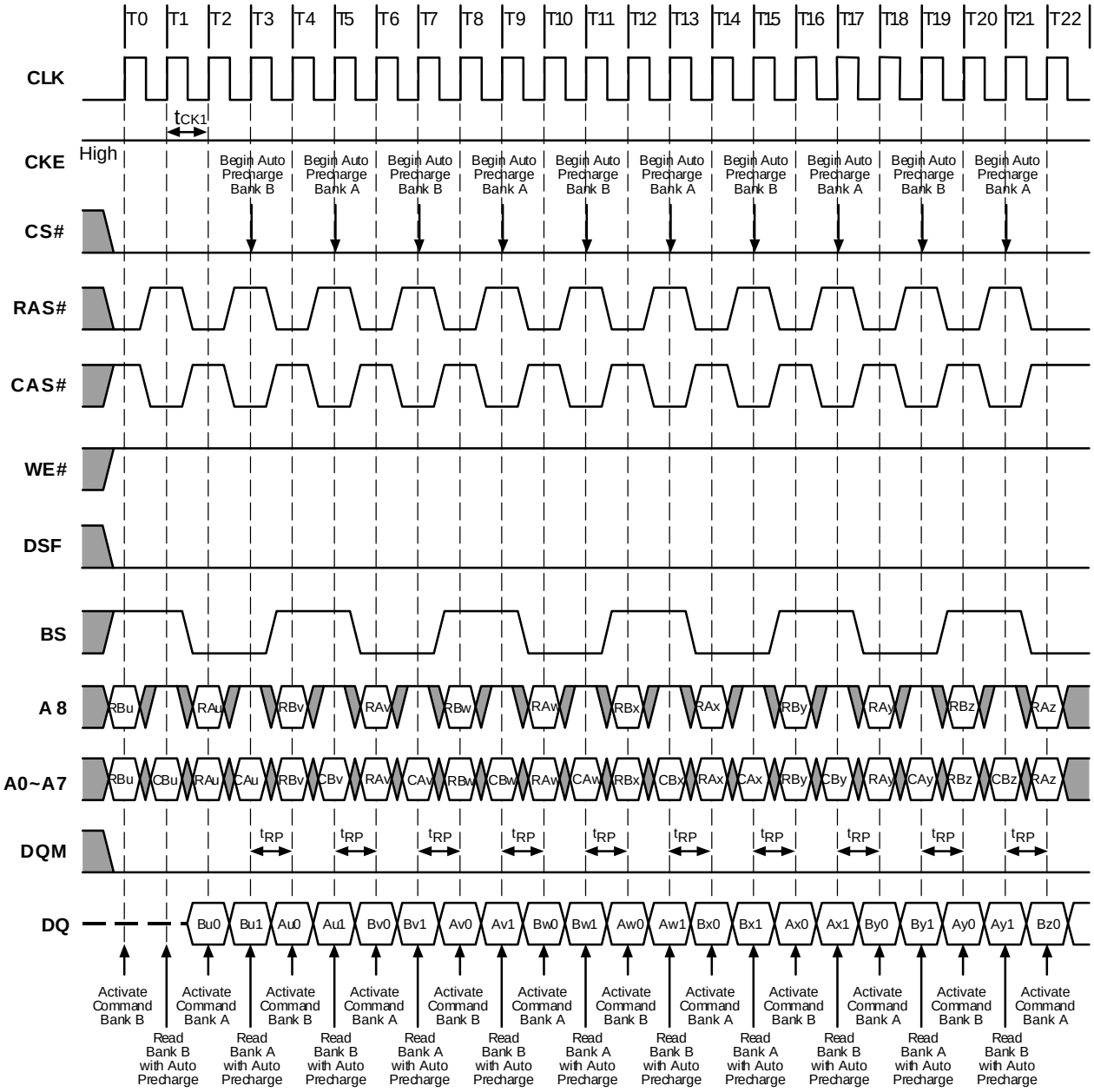

Figure 24. Full Page Random Column Read (Burst Length=Full Page, CAS# Latency=2)

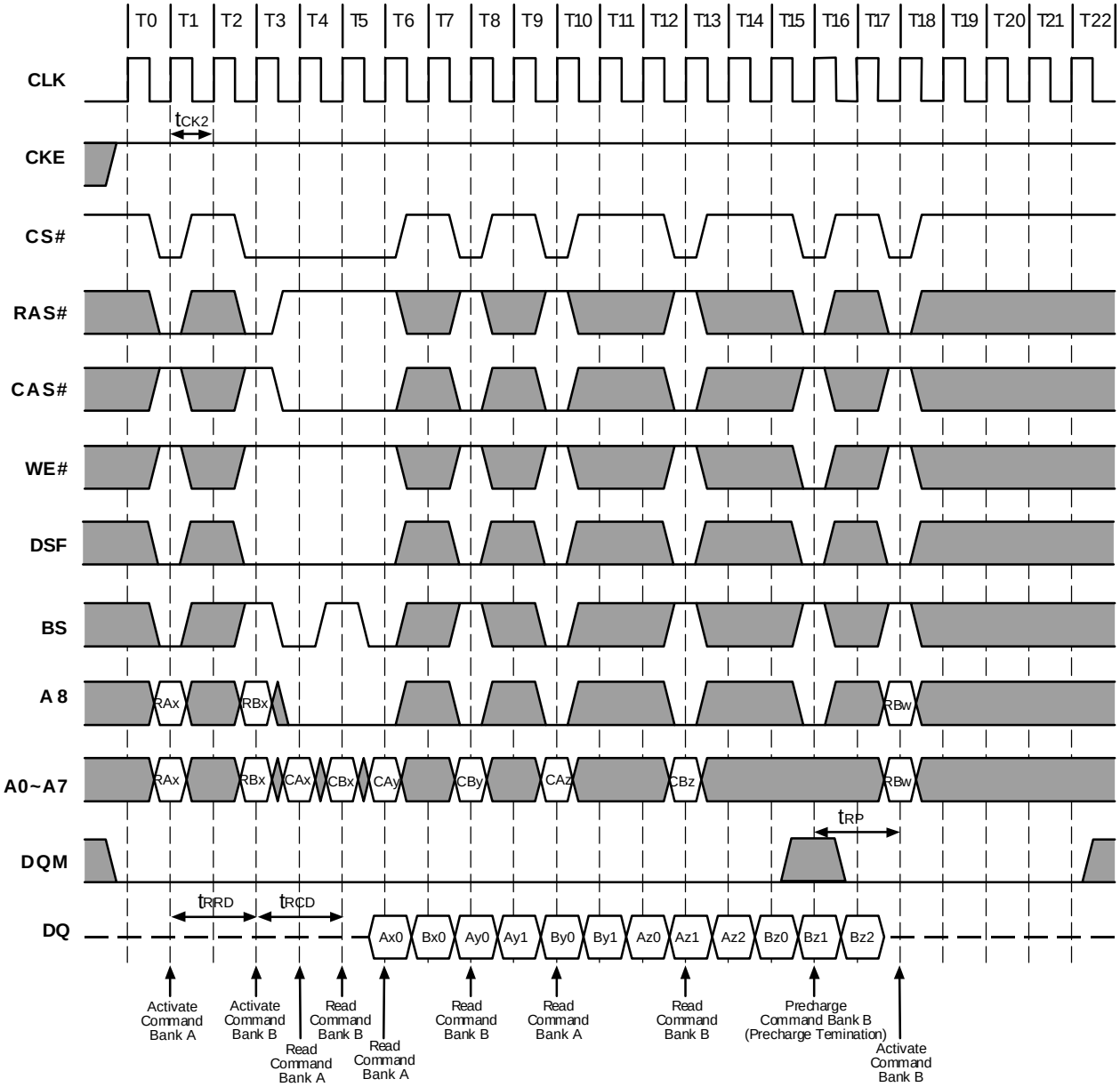

Figure 25. Full Page Random Column Write (Burst Length=Full Page, CAS# Latency=2)

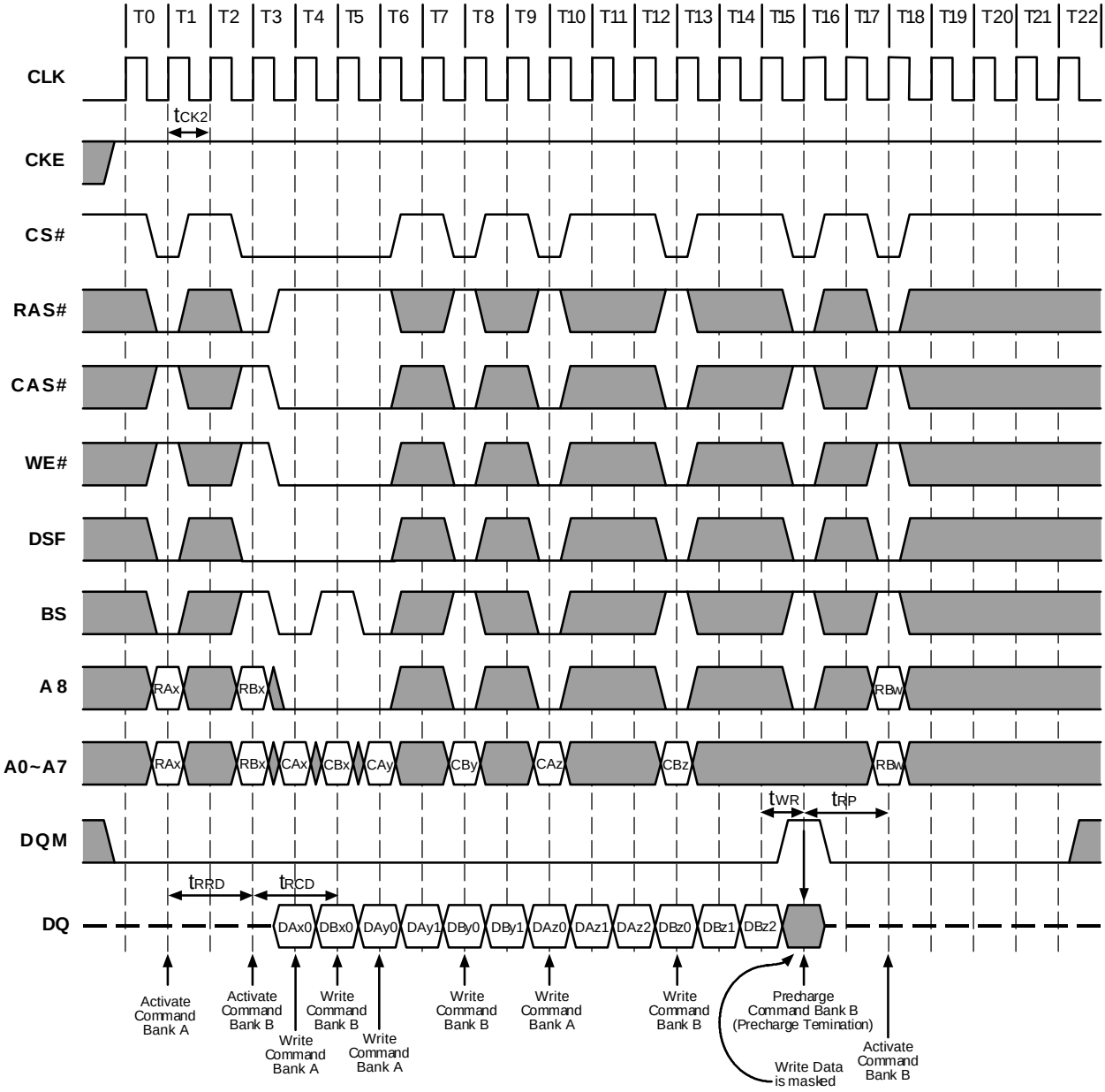

Figure 26.1. Precharge Termination of a Burst (Burst Length=Full Page, CAS# Latency=1)

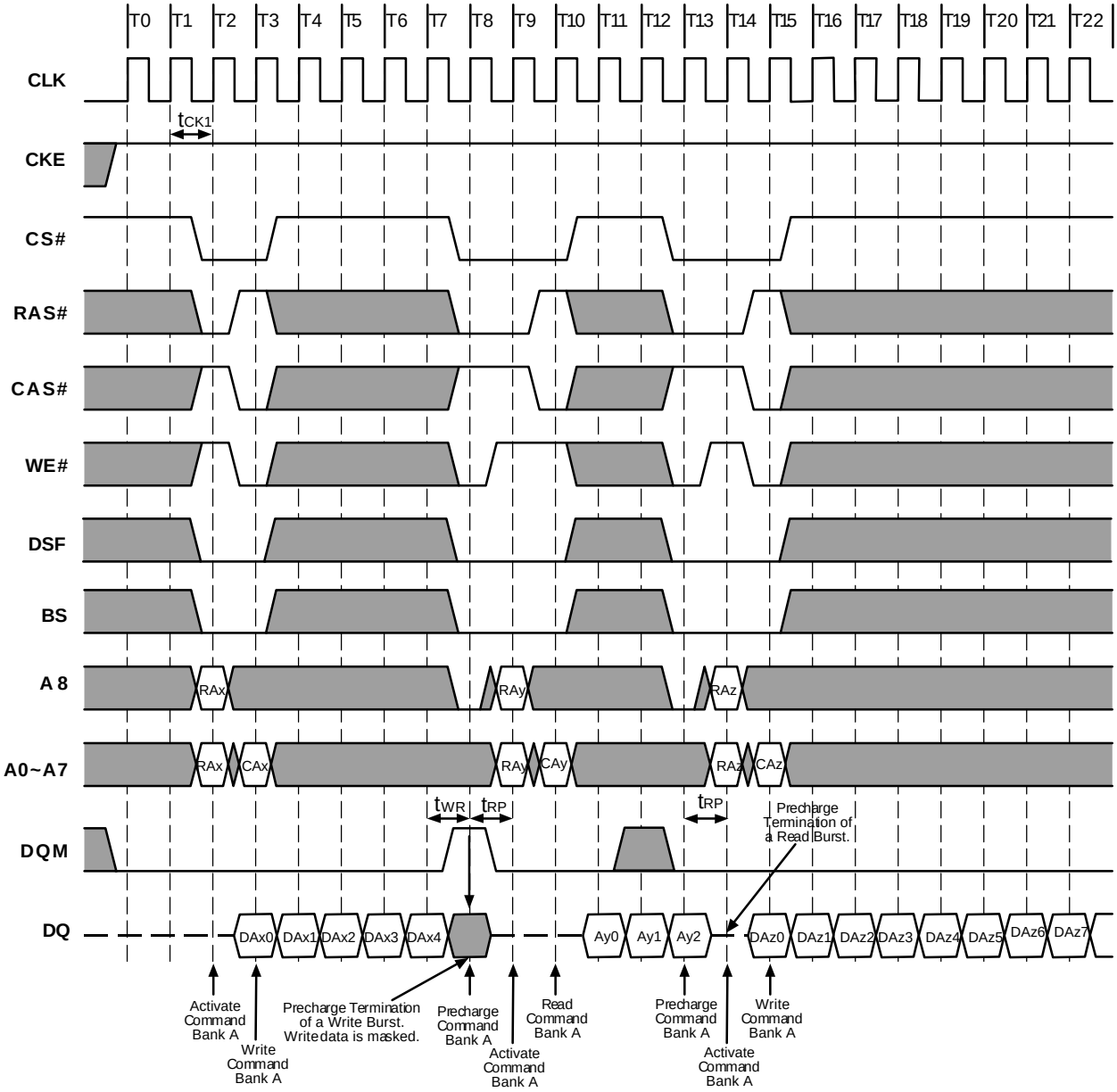

Figure 26.2. Precharge Termination of a Burst
(Burst Length=8 or Full Page, CAS# Latency=2)

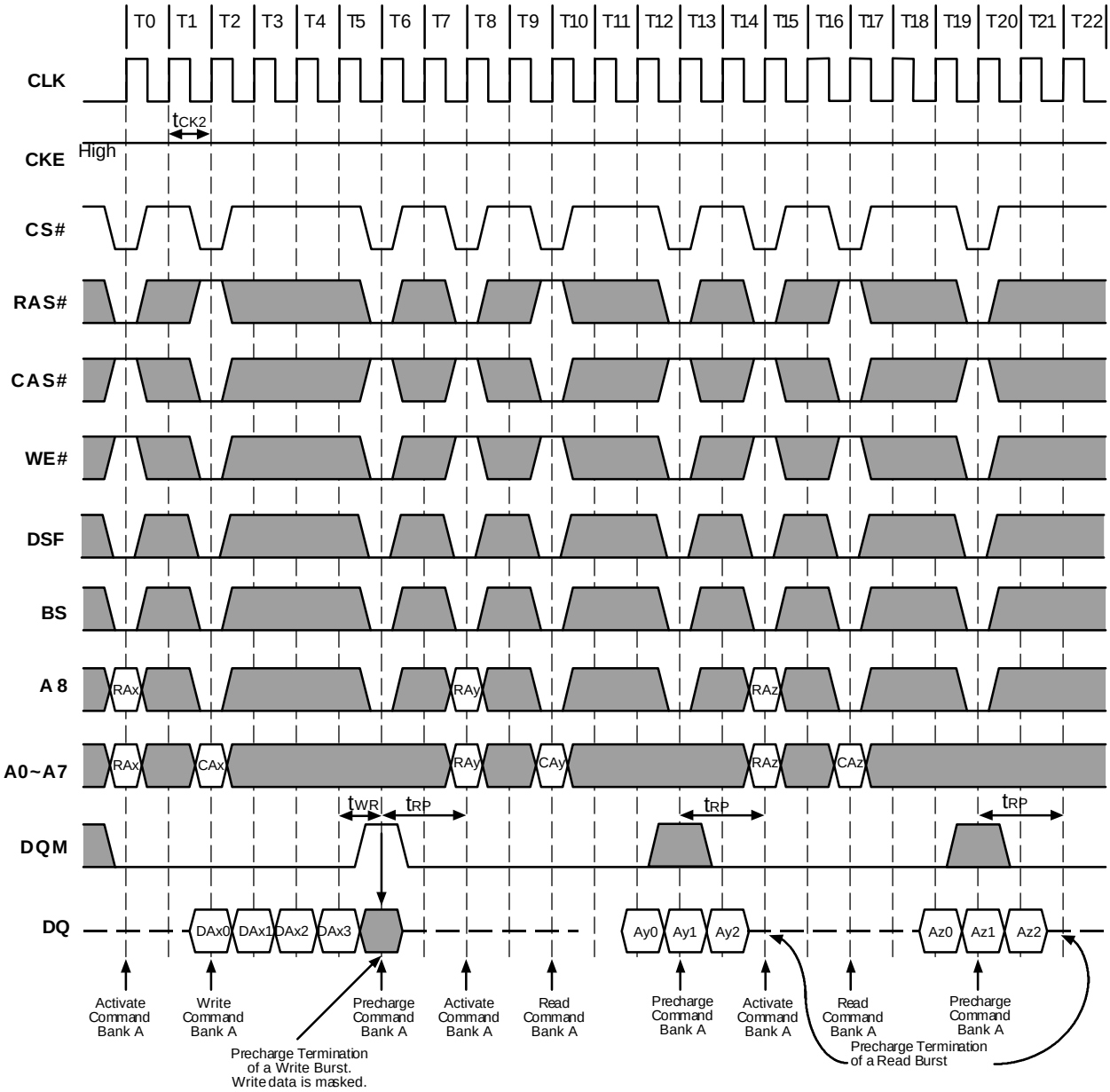

Figure 26.3. Precharge Termination of a Burst

(Burst Length=4, 8 or Full Page, CAS# Latency=3)

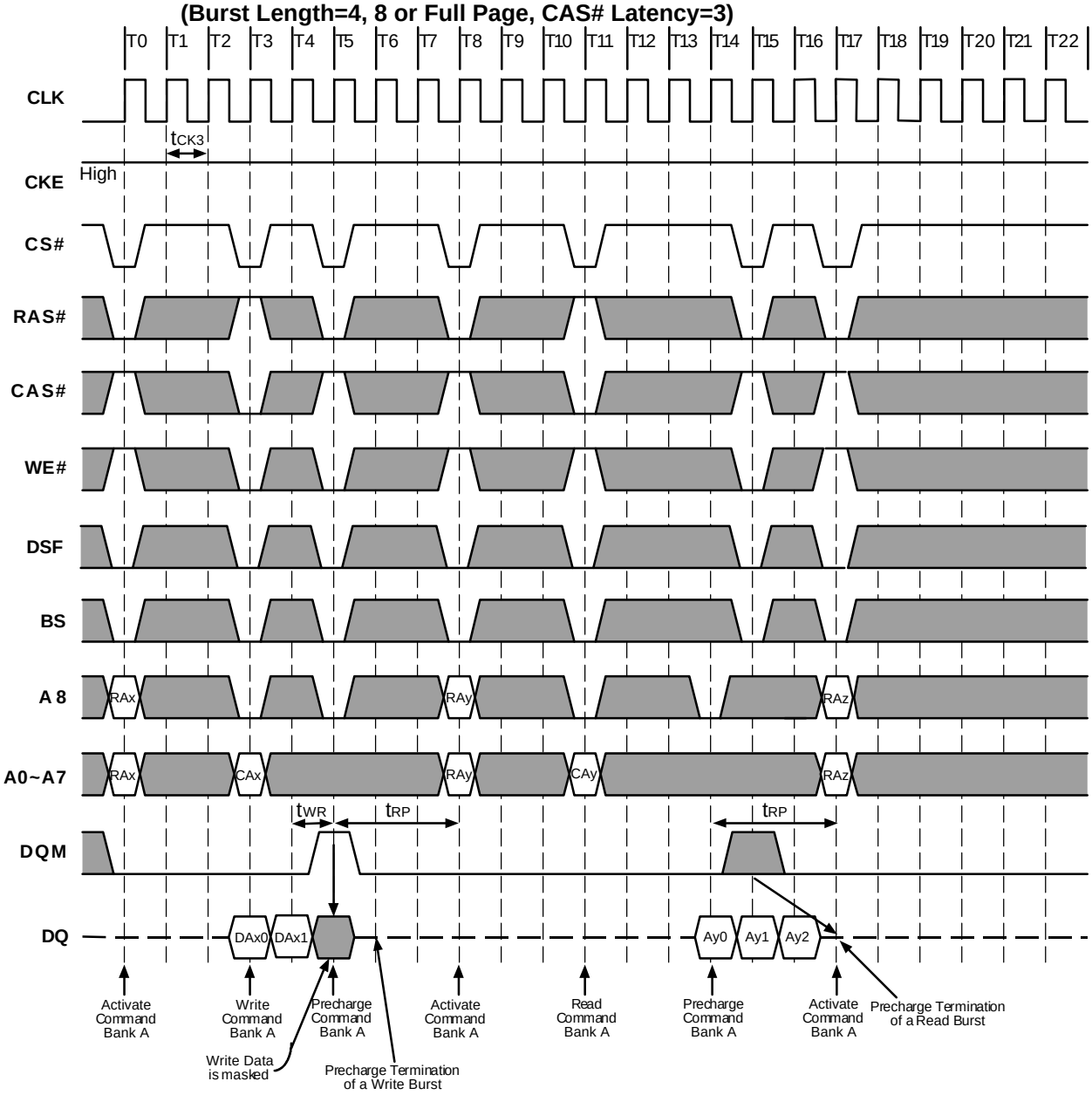

100 Pin 14x20 mm Package Outline Drawing Information

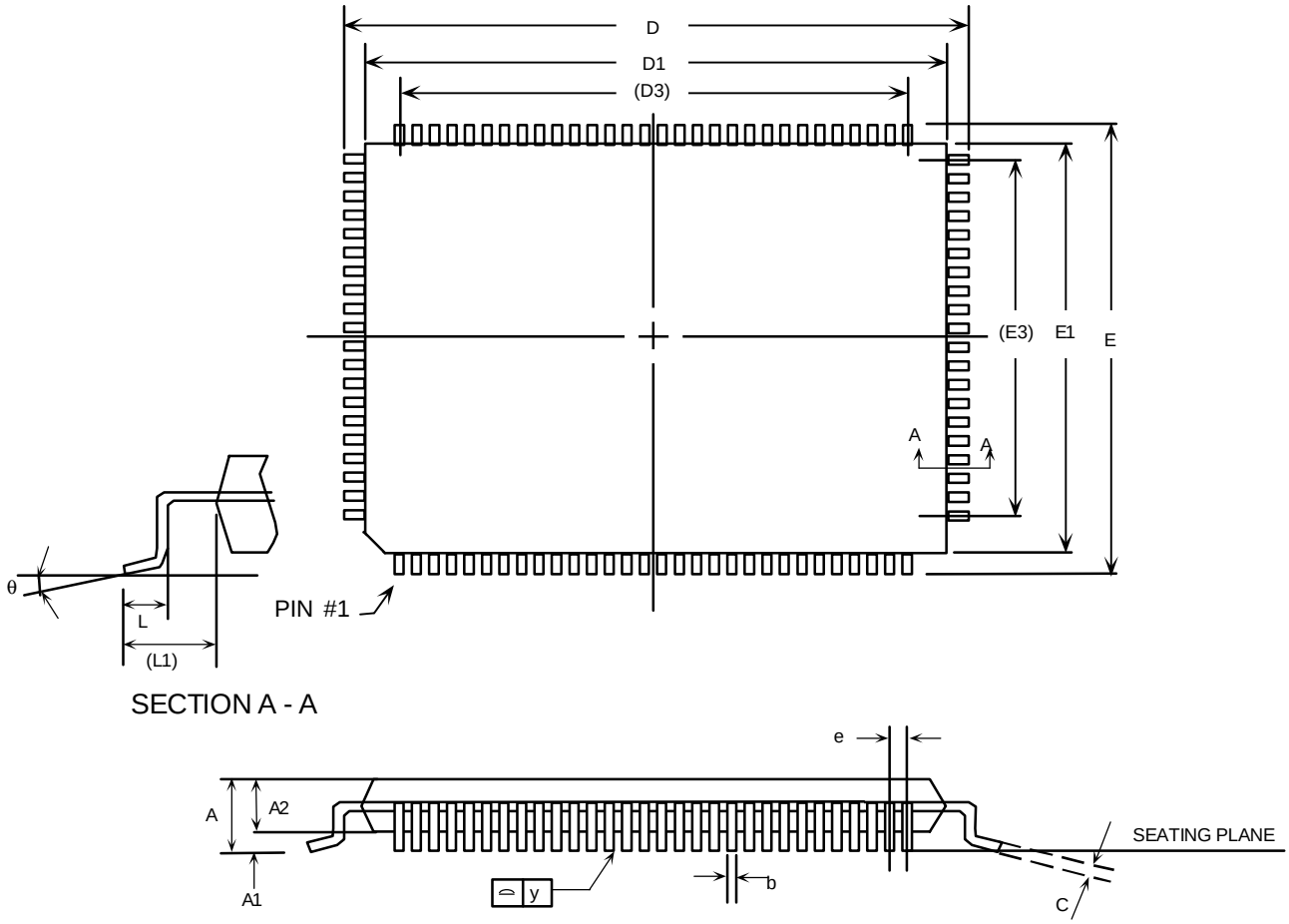

Packaging Dimensions

Unit = mm

Symbol	Definition	EM637327Q-XX			EM637327TQ-XX		
		min	normal	max	min	normal	max
A	Overall Height			3.40			1.60
A1	Stand Off	0.25			0.05	0.10	0.15
A2	Body Thickness	2.60	2.80	3.00	1.35	1.40	1.45
b	Lead Width	0.22	0.30	0.38	0.22	0.32	0.38
C	Lead Thickness	0.13	0.15	0.23	0.09		0.20
D	Terminal Dimension	22.95	23.20	23.45	21.90	22.00	22.10
D1	Package Body	19.90	20.00	20.10	19.90	20.00	20.10
D3	Reference	18.85 REF.			18.85 REF.		
E	Terminal Dimension	16.95	17.20	17.45	15.90	16.00	16.10
E1	Package Body	13.90	14.00	14.10	13.90	14.00	14.10
E3	Reference	12.35 REF.			12.35 REF.		
e	Lead Pitch	0.65 REF.			0.65 REF.		
L	Foot Length	0.65	0.80	0.95	0.45	0.60	0.75
L1	Lead Length	1.60 REF.			1.00 REF.		
y	Coplanarity			0.10			0.10
θ	Lead Angle	0.00°		7.00°	0.00°		7.00°

Компания «ЭлектроПласт» предлагает заключение долгосрочных отношений при поставках импортных электронных компонентов на взаимовыгодных условиях!

Наши преимущества:

- Оперативные поставки широкого спектра электронных компонентов отечественного и импортного производства напрямую от производителей и с крупнейших мировых складов;
- Поставка более 17-ти миллионов наименований электронных компонентов;
- Поставка сложных, дефицитных, либо снятых с производства позиций;
- Оперативные сроки поставки под заказ (от 5 рабочих дней);
- Экспресс доставка в любую точку России;
- Техническая поддержка проекта, помощь в подборе аналогов, поставка прототипов;
- Система менеджмента качества сертифицирована по Международному стандарту ISO 9001;
- Лицензия ФСБ на осуществление работ с использованием сведений, составляющих государственную тайну;
- Поставка специализированных компонентов (Xilinx, Altera, Analog Devices, Intersil, Interpoint, Microsemi, Aeroflex, Peregrine, Syfer, Eurofarad, Texas Instrument, Miteq, Cobham, E2V, MA-COM, Hittite, Mini-Circuits,General Dynamics и др.);

Помимо этого, одним из направлений компании «ЭлектроПласт» является направление «Источники питания». Мы предлагаем Вам помощь Конструкторского отдела:

- Подбор оптимального решения, техническое обоснование при выборе компонента;
- Подбор аналогов;
- Консультации по применению компонента;
- Поставка образцов и прототипов;
- Техническая поддержка проекта;
- Защита от снятия компонента с производства.

Как с нами связаться

Телефон: 8 (812) 309 58 32 (многоканальный)
Факс: 8 (812) 320-02-42
Электронная почта: org@eplast1.ru
Адрес: 198099, г. Санкт-Петербург, ул. Калинина, дом 2, корпус 4, литера А.