MCP6V01
Thermocouple Auto-Zeroed Reference Design

© 2008 Microchip Technology Inc.

Note the following details of the code protection feature on Microchip devices:

- Microchip products meet the specification contained in their particular Microchip Data Sheet.
- Microchip believes that its family of products is one of the most secure families of its kind on the market today, when used in the intended manner and under normal conditions.
- There are dishonest and possibly illegal methods used to breach the code protection feature. All of these methods, to our knowledge, require using the Microchip products in a manner outside the operating specifications contained in Microchip's Data Sheets. Most likely, the person doing so is engaged in theft of intellectual property.
- Microchip is willing to work with the customer who is concerned about the integrity of their code.
- Neither Microchip nor any other semiconductor manufacturer can guarantee the security of their code. Code protection does not mean that we are guaranteeing the product as "unbreakable."

Code protection is constantly evolving. We at Microchip are committed to continuously improving the code protection features of our products. Attempts to break Microchip's code protection feature may be a violation of the Digital Millennium Copyright Act. If such acts allow unauthorized access to your software or other copyrighted work, you may have a right to sue for relief under that Act.

Information contained in this publication regarding device applications and the like is provided only for your convenience and may be superseded by updates. It is your responsibility to ensure that your application meets with your specifications. MICROCHIP MAKES NO REPRESENTATIONS OR WARRANTIES OF ANY KIND WHETHER EXPRESS OR IMPLIED, WRITTEN OR ORAL, STATUTORY OR OTHERWISE, RELATED TO THE INFORMATION, INCLUDING BUT NOT LIMITED TO ITS CONDITION, QUALITY, PERFORMANCE, MERCHANTABILITY OR FITNESS FOR PURPOSE**.** Microchip disclaims all liability arising from this information and its use. Use of Microchip devices in life support and/or safety applications is entirely at the buyer's risk, and the buyer agrees to defend, indemnify and hold harmless Microchip from any and all damages, claims, suits, or expenses resulting from such use. No licenses are conveyed, implicitly or otherwise, under any Microchip intellectual property rights.

Trademarks

The Microchip name and logo, the Microchip logo, Accuron, dsPIC, KEELOQ, KEELOQ logo, MPLAB, PIC, PICmicro, PICSTART, rfPIC, SmartShunt and UNI/O are registered trademarks of Microchip Technology Incorporated in the U.S.A. and other countries.

FilterLab, Linear Active Thermistor, MXDEV, MXLAB, SEEVAL, SmartSensor and The Embedded Control Solutions Company are registered trademarks of Microchip Technology Incorporated in the U.S.A.

Analog-for-the-Digital Age, Application Maestro, CodeGuard, dsPICDEM, dsPICDEM.net, dsPICworks, dsSPEAK, ECAN, ECONOMONITOR, FanSense, In-Circuit Serial Programming, ICSP, ICEPIC, Mindi, MiWi, MPASM, MPLAB Certified logo, MPLIB, MPLINK, mTouch, PICkit, PICDEM, PICDEM.net, PICtail, PIC^{32} logo, PowerCal, PowerInfo, PowerMate, PowerTool, REAL ICE, rfLAB, Select Mode, Total Endurance, WiperLock and ZENA are trademarks of Microchip Technology Incorporated in the U.S.A. and other countries.

SQTP is a service mark of Microchip Technology Incorporated in the U.S.A.

All other trademarks mentioned herein are property of their respective companies.

© 2008, Microchip Technology Incorporated, Printed in the U.S.A., All Rights Reserved.

Printed on recycled paper.

QUALITY MANAGEMENT SYSTEM
CERTIFIED BY DNV
ISO/TS 16949:2002

Microchip received ISO/TS-16949:2002 certification for its worldwide headquarters, design and wafer fabrication facilities in Chandler and Tempe, Arizona; Gresham, Oregon and design centers in California and India. The Company's quality system processes and procedures are for its PIC® MCUs and dsPIC® DSCs, KEELOQ® code hopping devices, Serial EEPROMs, microperipherals, nonvolatile memory and analog products. In addition, Microchip's quality system for the design and manufacture of development systems is ISO 9001:2000 certified.

Table of Contents

Preface **1**
Introduction 1
Document Layout 1
Conventions Used in this Guide 2
Recommended Reading 3
The Microchip Web Site 3
Customer Support 4
Document Revision History 4

Chapter 1. Product Overview
1.1 Introduction 5
1.2 MCP6V01 Thermocouple Auto-Zeroed Reference Design Kit Contents 5
1.3 MCP6V01 Thermocouple Auto-Zeroed Reference Design Description 6

Chapter 2. Installation and Operation
2.1 Introduction 11
2.2 Required Tool 11
2.3 MCP6V01 Thermocouple Auto-Zeroed Reference Design Setup 11
2.4 MCP6V01 Thermocouple Auto-Zeroed Reference Design Operation 12

Appendix A. Schematic and Layout
A.1 Introduction 17
A.2 Board - Schematic 18
A.3 Board - Top Silk Layer 19
A.4 Board - Top Metal Layer 19
A.5 Board - Metal Layer 2 20
A.6 Board - Metal Layer 3 20
A.7 Board - Bottom Silk Layer (Bottom View) 21
A.8 Board - Bottom Layer 21

Appendix B. Bill Of Materials (BOM)

Worldwide Sales and Service **26**

NOTES:

© 2008 Microchip Technology Inc.

Preface

NOTICE TO CUSTOMERS

All documentation becomes dated, and this manual is no exception. Microchip tools and documentation are constantly evolving to meet customer needs, so some actual dialogs and/or tool descriptions may differ from those in this document. Please refer to our web site (www.microchip.com) to obtain the latest documentation available.

Documents are identified with a "DS" number. This number is located on the bottom of each page, in front of the page number. The numbering convention for the DS number is "DSXXXXXA", where "XXXXX" is the document number and "A" is the revision level of the document.

For the most up-to-date information on development tools, see the MPLAB® IDE on-line help. Select the Help menu, and then Topics to open a list of available on-line help files.

INTRODUCTION

This chapter contains general information that will be useful to know before using the MCP6V01 Thermocouple Auto-Zeroed Reference Design. Items discussed in this chapter include:

- Document Layout
- Conventions Used in this Guide
- Recommended Reading
- The Microchip Web Site
- Customer Support
- Document Revision History

DOCUMENT LAYOUT

This document describes how to use the MCP6V01 Thermocouple Auto-Zeroed Reference Design as a development tool to emulate and debug firmware on a target board. The manual layout is as follows:

- **Chapter 1. "Product Overview"** - Provides the important information about the MCP6V01 Thermocouple Auto-Zeroed Reference Design.
- **Chapter 2. "Installation and Operation"** – Covers the installation and operation of the MCP6V01 Thermocouple Auto-Zeroed Reference Design. It shows how to set up the board, and demonstrates how to verify the operation.
- **Appendix A. "Schematic and Layout"** – Shows the schematic and board layouts for the MCP6V01 Thermocouple Auto-Zeroed Reference Design.
- **Appendix B. "Bill Of Materials (BOM)"** – Lists the parts used to build the MCP6V01 Thermocouple Auto-Zeroed Reference Design.

© 2008 Microchip Technology Inc.

CONVENTIONS USED IN THIS GUIDE

This manual uses the following documentation conventions:

DOCUMENTATION CONVENTIONS

Description	Represents	Examples
Arial font:		
Italic characters	Referenced books	*MPLAB® IDE User's Guide*
	Emphasized text	...is the *only* compiler...
Initial caps	A window	the Output window
	A dialog	the Settings dialog
	A menu selection	select Enable Programmer
Quotes	A field name in a window or dialog	"Save project before build"
Underlined, italic text with right angle bracket	A menu path	*File>Save*
Bold characters	A dialog button	Click **OK**
	A tab	Click the **Power** tab
N'Rnnnn	A number in verilog format, where N is the total number of digits, R is the radix and n is a digit.	4'b0010, 2'hF1
Text in angle brackets < >	A key on the keyboard	Press <Enter>, <F1>
Courier New font:		
Plain Courier New	Sample source code	`#define START`
	Filenames	`autoexec.bat`
	File paths	`c:\mcc18\h`
	Keywords	`_asm, _endasm, static`
	Command-line options	`-Opa+, -Opa-`
	Bit values	`0, 1`
	Constants	`0xFF, 'A'`
Italic Courier New	A variable argument	*`file`*`.o`, where *`file`* can be any valid filename
Square brackets [ ]	Optional arguments	`mcc18 [options]` *`file`* `[options]`
Curly brackets and pipe character: { | }	Choice of mutually exclusive arguments; an OR selection	`errorlevel {0|1}`
Ellipses...	Replaces repeated text	`var_name [, var_name...]`
	Represents code supplied by user	`void main (void) { ... }`

© 2008 Microchip Technology Inc.

RECOMMENDED READING

This user's guide describes how to use MCP6V01 Thermocouple Auto-Zeroed Reference Design. Other useful documents are listed below. The following Microchip documents are available and recommended as supplemental reference resources.

MCP6V01/2/3/6/7/8 Data Sheet, *"Auto-Zeroed Op Amps"* (DS51738)

This data sheet provides detailed information regarding the MCP6V0X Op Amps.

MCP6001/2/4 Data Sheet, *"1 MHz, Low-Power Op Amps"* (DS21733)

This data sheet provides detailed information regarding the MCP600X Op Amps.

MCP1525/41 Data Sheet, *"2.5V and 4.096V Voltage References"* (DS21653)

This data sheet provides detailed information on the MCP15XX Voltage References.

MCP9800/1/2/3 Data Sheet, *"2-Wire High-Accuracy Temperature Sensor"* (DS21909)

This data sheet provides detailed information regarding the MCP980X Temperature Sensors.

PIC18F2455/2550/4455/4550 Data Sheet, *"28/40/44-Pin, High-Performance, Enhanced Flash, USB Microcontrollers with nanoWatt Technology"* (DS39632)

This data sheet provides detailed information regarding the PIC18F2455/2550/4455/4550 Microcontrollers.

AN679, *"Temperature Sensing Technologies"* (DS00679)

This application note covers the most popular temperature sensor technologies and helps determine the most appropriate sensor for an application.

AN684, *"Single Supply Temperature Sensing with Thermocouples"* (DS00684)

This application note focuses on thermocouple circuit solutions. It builds from signal conditioning components to complete application circuits.

AN699, *"Anti-Aliasing, Analog Filters for Data Acquisition Systems"* (DS00699)

A tutorial on active analog filters and their most common applications.

***"Signal Chain Design Guide"* (DS21825)**

THE MICROCHIP WEB SITE

Microchip provides online support via our web site at www.microchip.com. This web site is used as a means to make files and information easily available to customers. Accessible by using your favorite Internet browser, the web site contains the following information:

- **Product Support** – Data sheets and errata, application notes and sample programs, design resources, user's guides and hardware support documents, latest software releases and archived software
- **General Technical Support** – Frequently Asked Questions (FAQs), technical support requests, online discussion groups, Microchip consultant program member listing
- **Business of Microchip** – Product selector and ordering guides, latest Microchip press releases, listing of seminars and events, listings of Microchip sales offices, distributors and factory representatives

CUSTOMER SUPPORT

Users of Microchip products can receive assistance through several channels:

- Distributor or Representative
- Local Sales Office
- Field Application Engineer (FAE)
- Technical Support

Customers should contact their distributor, representative or field application engineer (FAE) for support. Local sales offices are also available to help customers. A listing of sales offices and locations is included in the back of this document.

Technical support is available through the web site at: http://support.microchip.com

DOCUMENT REVISION HISTORY

Revision B (December 2008)

- Updated the Bottom Metal Layer print.
- Updated Product Review.

Revision A (May 2008)

- Initial Release of this Document.

© 2008 Microchip Technology Inc.

Chapter 1. Product Overview

1.1 INTRODUCTION

The MCP6V01 Thermocouple Auto-Zeroed Reference Design is described by the following:

- Assembly # : 114-00169
- Order # : MCP6V01RD-TCPL
- Name: MCP6V01 Thermocouple Auto-Zeroed Reference Design Board

Items discussed in this chapter include:

- MCP6V01 Thermocouple Auto-Zeroed Reference Design Board Kit Contents
- MCP6V01 Thermocouple Auto-Zeroed Reference Design Board Description
- Associated Tools

1.2 MCP6V01 THERMOCOUPLE AUTO-ZEROED REFERENCE DESIGN KIT CONTENTS

- MCP6V01 Thermocouple Auto-Zeroed Reference Design (102-00169)
- Important “Read First” Information
- Accessory Bag - Contains a K-type thermocouple and an USB cable
- Analog and Interface Products Demonstration Boards CD-ROM (DS21912) includes:
  - MCP6V01 Thermocouple Auto-Zeroed Reference Design (D51738)
  - Thermal Management Software
  - Firmware for PIC18F2550

FIGURE 1-1: *MCP6V01 Thermocouple Auto-Zeroed Reference Design Kit.*

1.3 MCP6V01 THERMOCOUPLE AUTO-ZEROED REFERENCE DESIGN DESCRIPTION

1.3.1 Function Block Diagram Description

The MCP6V01 Thermocouple Auto-Zeroed Reference Design demonstrates how to measure electromotive force (EMF) voltage at the cold junction of the thermocouple in order to accurately measure temperature at the hot junction. This can be done by using the MCP6V01 auto-zeroed op amp because of its ultra low offset voltage (V_{OS}) and high common mode rejection ratio (CMRR).

- The difference amplifier is implemented using the MCP6V01 and 0.1% tolerance resistors. It amplifies the EMF voltage at the cold junction of the thermocouple.
- The MCP9800 senses temperature at the type K thermocouple's connector. It should be located as close as possible to the connector on the PCB. This measurement is used to perform cold junction compensation for the thermocouple measurement.
- The MCP1541 provides a V_{REF} (4.1V) to the internal 10-Bit ADC of the PIC18F2550 and sets the reference voltage for the difference amplifier.
- The CV_{REF} is the internal comparator voltage reference of PIC18F2550, which is a 16-tap resistor ladder network that provides a selectable reference voltage. The MCP6001 buffer amplifier eliminates the voltage reference output impedance problem and produces the voltage V_{SHIFT}.
- The 2nd order RC low-pass filter that is implemented in this circuit can remove the high frequency noise and aliasing at the ADC input. The ADC of PIC18F2550 completes the analog-to-digital conversion. The data will be transferred to the PC using the USB interface.
- The Thermal Management Software on PC is used to perform data display to show the real-time temperature and apply cold junction compensation and data linearization to determine the actual temperature of the thermocouple's hot junction (weld bead).

© 2008 Microchip Technology Inc.

Figure 1-2 shows the function block diagram of the MCP6V01 Thermocouple Auto-Zeroed Reference Design.

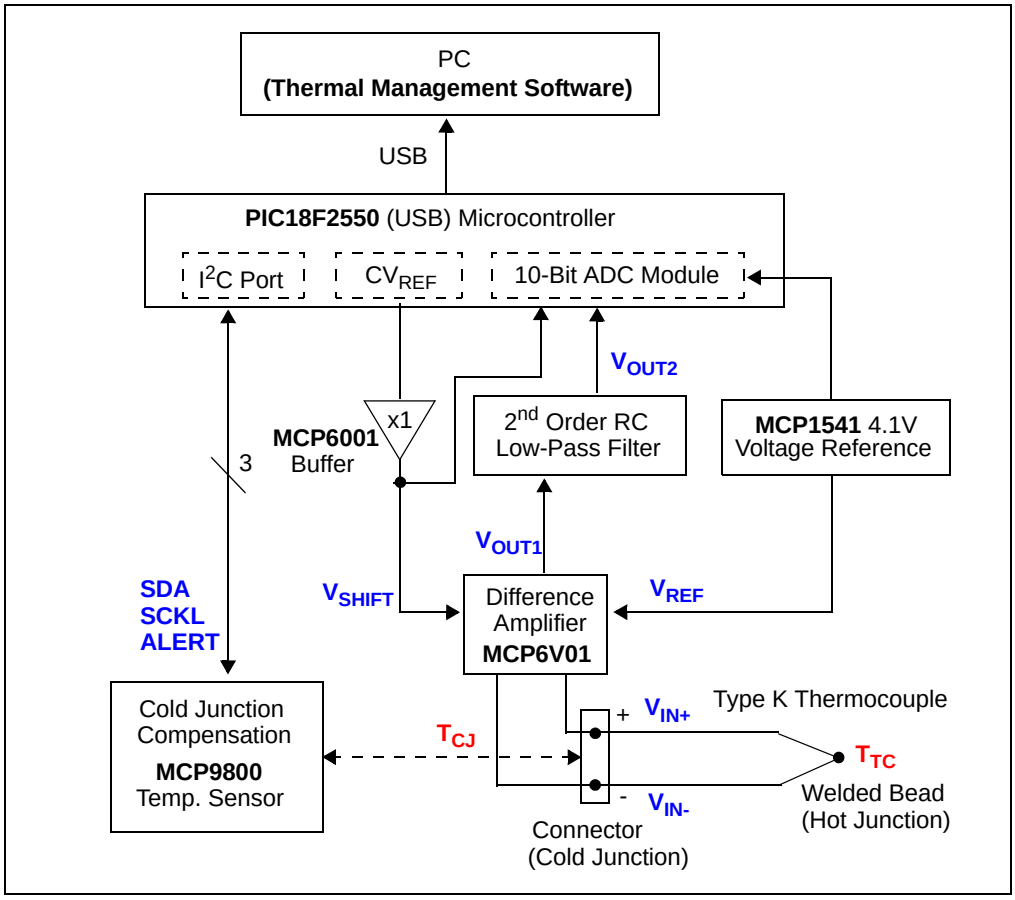

FIGURE 1-2: *Function Block Diagram of the MCP6V01 Thermocouple Auto-Zeroed Reference Design.*

1.3.2 Analog Sensing Circuit Diagram Description

- Difference Amplifier
  - Uses a MCP6V01 auto-zeroed op amp (U5)
  - Two 0.1% tolerance gain resistors (R8 and R11)
  - Two 0.1% tolerance input resistors for shifting V_{OUT1} (R9 and R10)
  - Two 0.1% tolerance input resistors for the thermocouple output (R6 and R7)
- Buffer Amplifier
  - Uses a MCP6001 standard op amp (U4)
  - Outputs V_{SHIFT} which shifts V_{OUT1} by 16 different values
  - Sends V_{SHIFT} back to PIC's internal ADC to make calculated result more accurate
- 2nd Order RC Low-Pass Filter
  - Fast enough to quick changes in temperature
  - Double pole for anti-aliasing and removing high-frequency noise
  - No DC offset and simple architecture

Figure 1-3 shows the analog sensing circuit diagram of MCP6V01 Thermocouple Auto-Zeroed Reference Design.

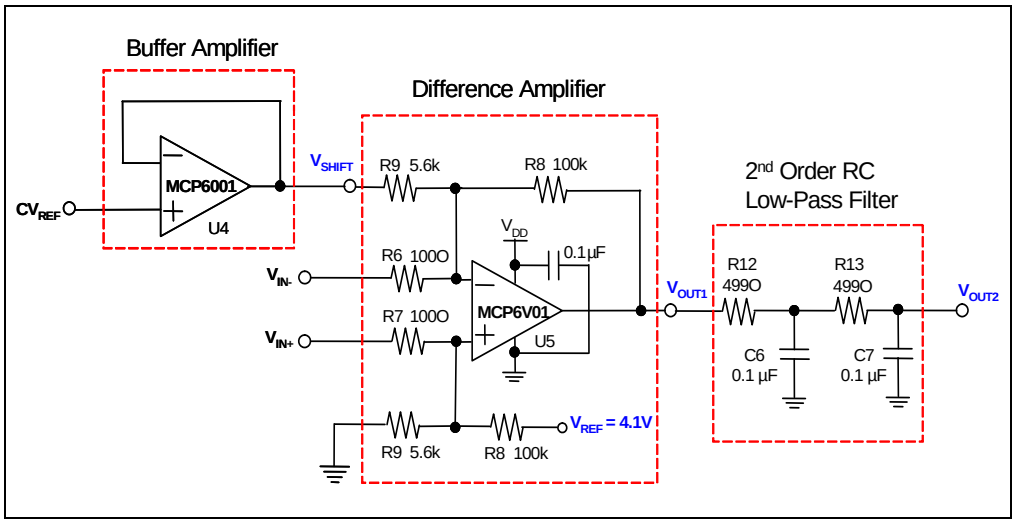

FIGURE 1-3: *Analog Sensing Circuit Diagram of the MCP6V01 Thermocouple Auto-Zeroed Reference Design.*

© 2008 Microchip Technology Inc.

1.3.3 V_{SHIFT} Operation Description

CV_{REF} produces V_{SHIFT} through the buffer amplifier. V_{SHIFT} is brought back to the PIC18F2550 so that it can be sampled by the ADC, then used to adjust the measured V_{OUT1}. This makes the V_{SHIFT} values accurate to the 10-Bit ADC's capability. The values within each range also have a resolution of 10 bits. Thus, this gives 14 bits of resolution in total.

- 14-Bit Resolution, 10-Bit ADC
  - PIC18F2550's CV_{REF} (16 levels) subdivides input ranges
  - PIC18F2550's internal 10-Bit ADC converts result and calibrates CV_{REF}
  - The firmware automatically searches for correct CV_{REF} value
- This solution minimizes cost by using resources internal to the PIC to achieve reasonable resolution without an external ADC. Further savings could be achieved by using a voltage reference internal to the PIC instead of the external MCP1541.

Note: V_{OUT1}, V_{SHIFT1} and V_{IN+} - V_{IN-} are not drawn to scale. This is a conceptual diagram only.

Figure 1-4 shows the conceptual diagram of the V_{SHIFT} operation.

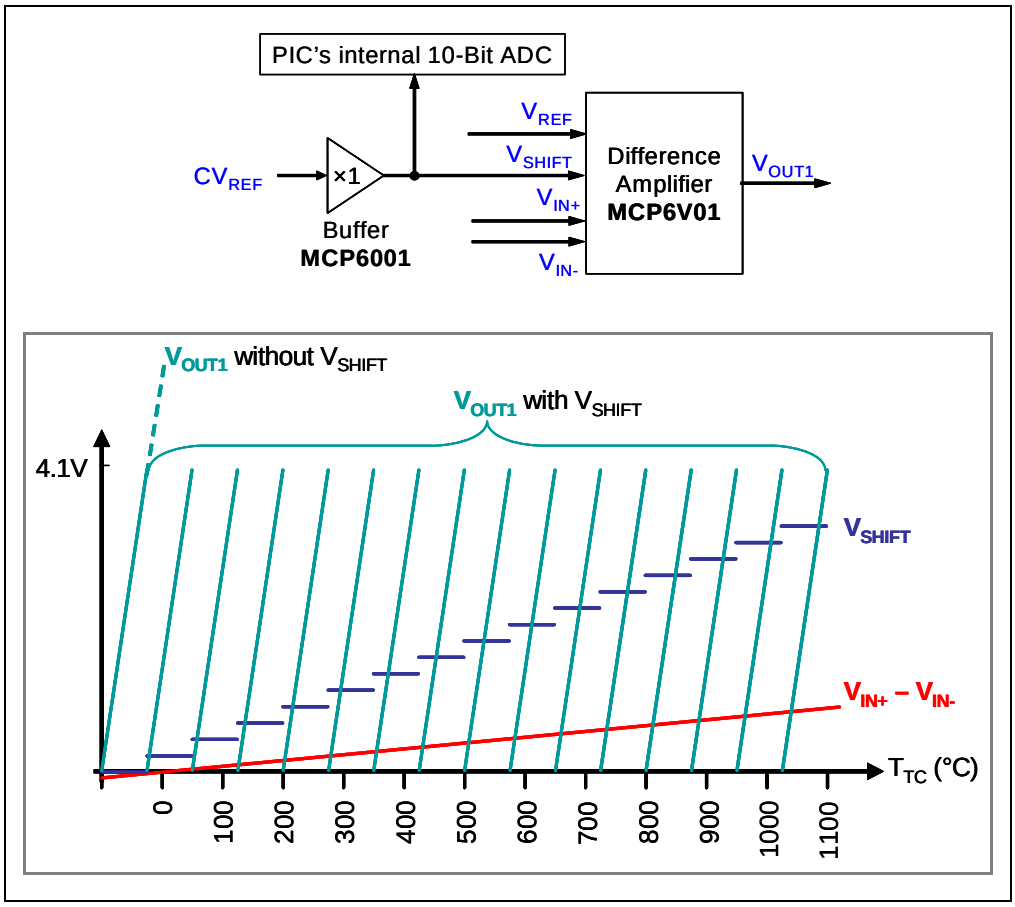

FIGURE 1-4: *V_{SHIFT} Operation Conceptual Diagram.*

The MCP6V01 Thermocouple Auto-Zeroed Reference Design has the following features:

- Uses a MCP6V01 difference amplifier as an analog sensor conditioning circuit
- Uses the K-type thermocouple to sense temperature
- Temperature range is from -100°C to +1000°C
- Uses the MCP9800 Temperature Sensor for cold junction compensation
- Uses the USB interface to transfer data to PC
- 14-Bit Resolution, 10-Bit ADC
- Test points for bench work

© 2008 Microchip Technology Inc.

Chapter 2. Installation and Operation

2.1 INTRODUCTION

This chapter shows how to set up the MCP6V01 Thermocouple Auto-Zeroed Reference Design and explores the operation of a temperature measurement application.

Items discussed in this chapter include:

- Required Tools
- MCP6V01 Thermocouple Auto-Zeroed Reference Design Setup
- MCP6V01 Thermocouple Auto-Zeroed Reference Design Operation

2.2 REQUIRED TOOL

- The Personal Computer (PC) shown in Figure 1-2 needs to run on Windows® 98 SE or later. It provides a convenient interface for the user, communicates with the boards, and provides power through the USB connection.

2.3 MCP6V01 THERMOCOUPLE AUTO-ZEROED REFERENCE DESIGN SETUP

1. Connect the type K thermocouple and the USB cable to the MCP6V01 Thermocouple Auto-Zeroed Reference Design.

   An exploded view is shown in the Figure 2-1.

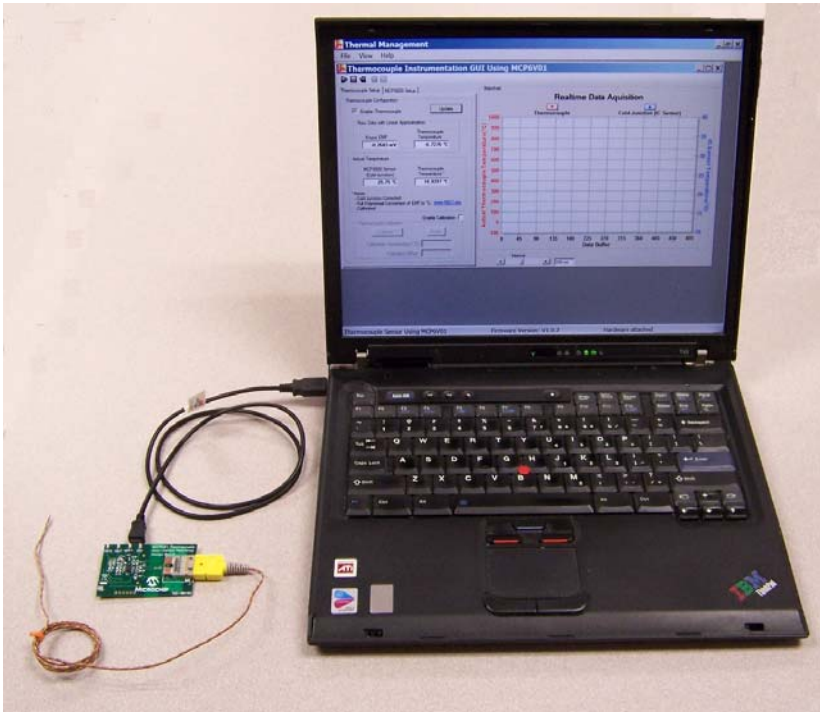

FIGURE 2-1: *MCP6V01 Thermocouple Auto-Zeroed Reference Design Setup.*

2.4 MCP6V01 THERMOCOUPLE AUTO-ZEROED REFERENCE DESIGN OPERATION

1. Start the Thermal Management Software on the PC.

   If the hardware is connected properly, the software will recognize the hardware and this is confirmed by showing the Thermocouple Instrumentation GUI Using MCP6V01 panel, as indicated in Figure 2-2. Otherwise, the software will show the Hardware Not Detected message box, as indicated in Figure 2-3.

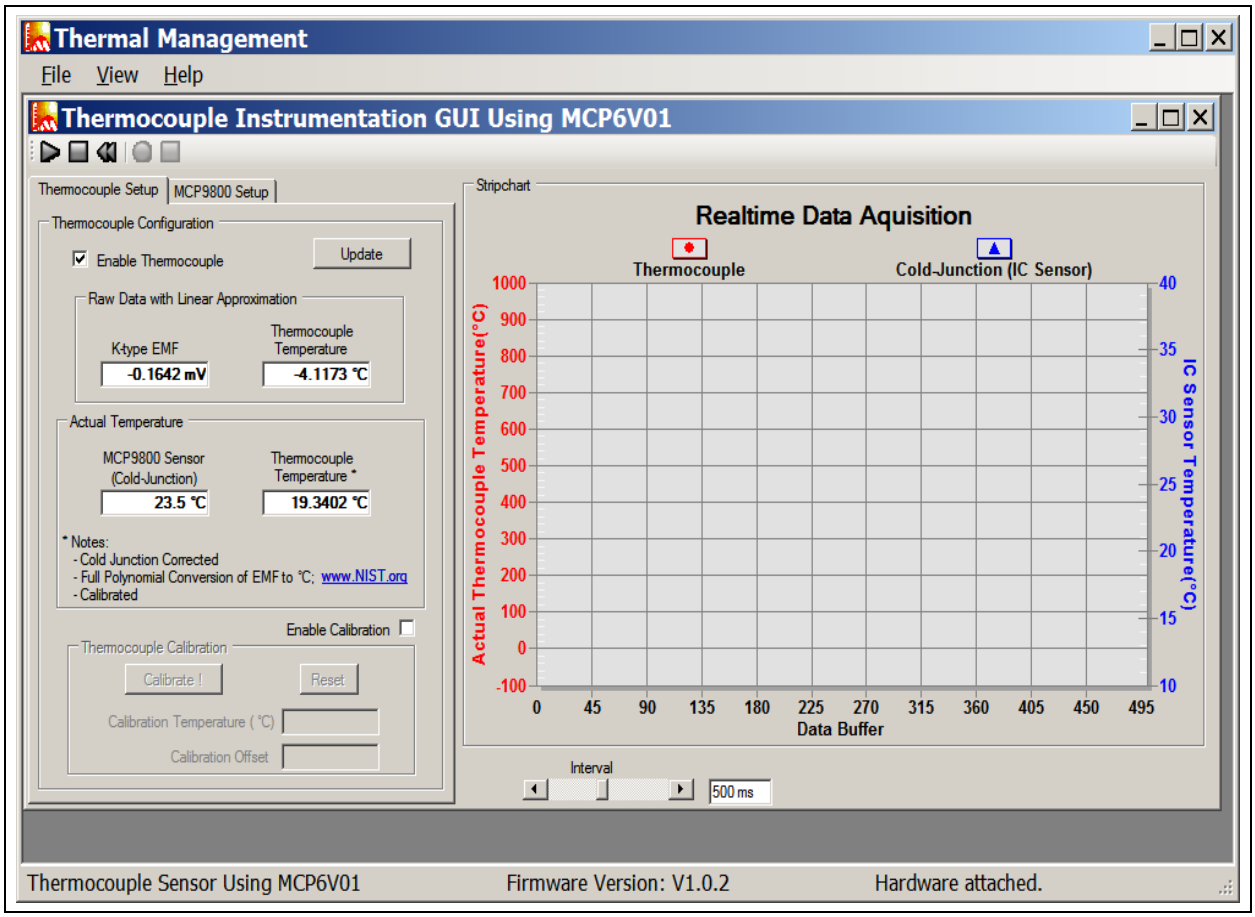

FIGURE 2-2: *Thermocouple Instrumentation GUI Using MCP6V01.*

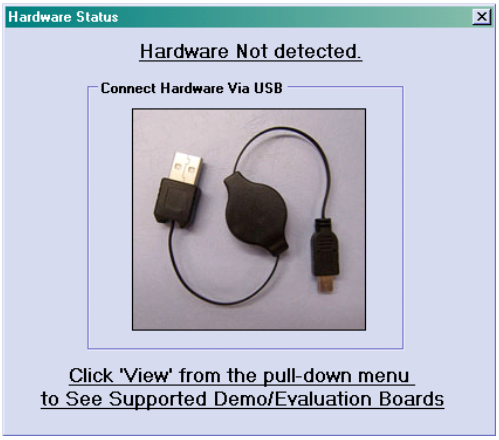

FIGURE 2-3: *Hardware Not Detected Message Box.*

© 2008 Microchip Technology Inc.

2.4.1 Set Up the MCP9800 Temperature Sensor Configuration

1. Click the **MCP9800 Setup** tab.
2. The **MCP9800 Configuration** can be modified from the default values.
3. Click the **Update Temp.** button to complete the modifications.

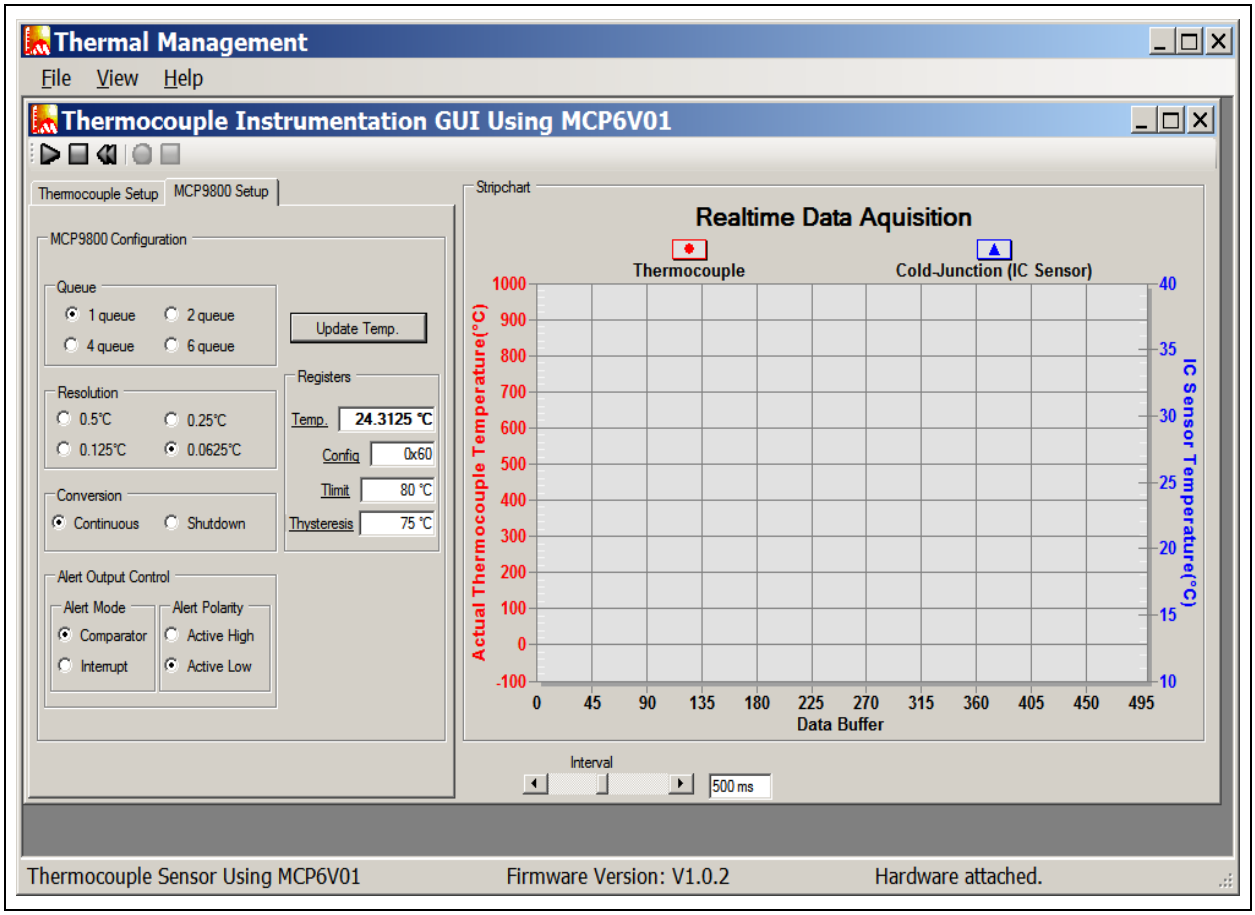

FIGURE 2-4: *MCP9800 Setup.*

2.4.2 Set Up the Thermocouple Configuration

1. Click the **Thermocouple Setup** tab.
2. **Enable thermocouple** is selected as default. **Enable Calibration** also can be selected.
3. Click the **Update** button to complete the setup.

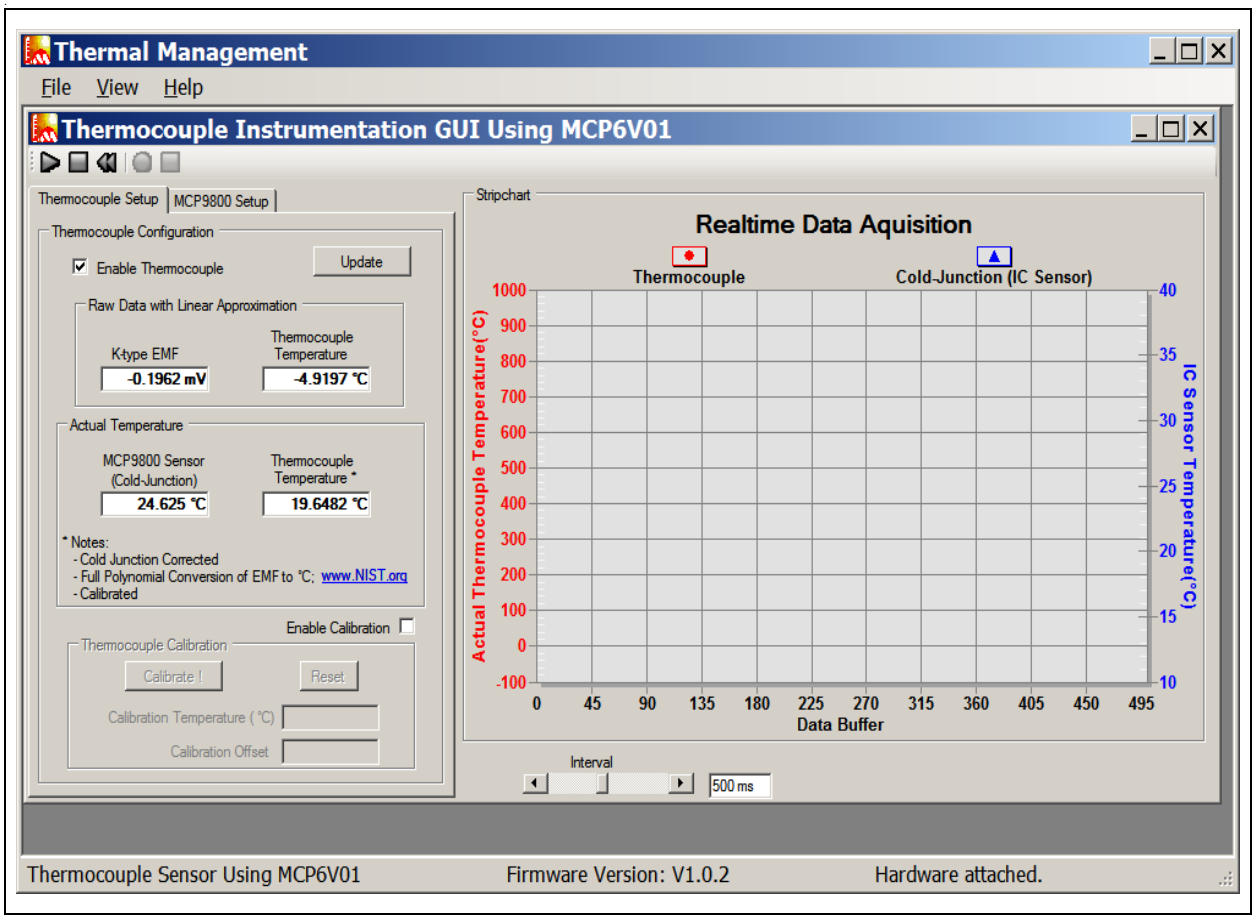

FIGURE 2-5: *Thermocouple setup.*

© 2008 Microchip Technology Inc.

2.4.3 Customize the Realtime Data Aquisition

1. Double click on the region of the stipchart to customize the Realtime Data Aquisition.

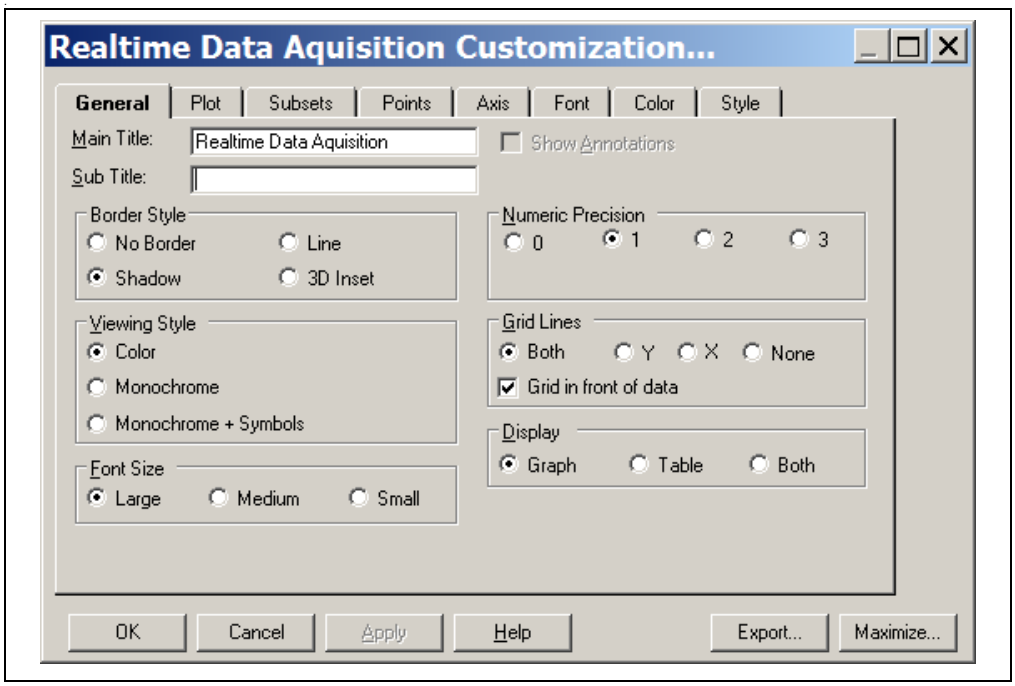

FIGURE 2-6: *Realtime Data Aquisition Customization.*

2.4.3.1 START THE REALTIME DATA AQUISITION

1. Click the **PLAY** button to start the Realtime Data Aquisition.

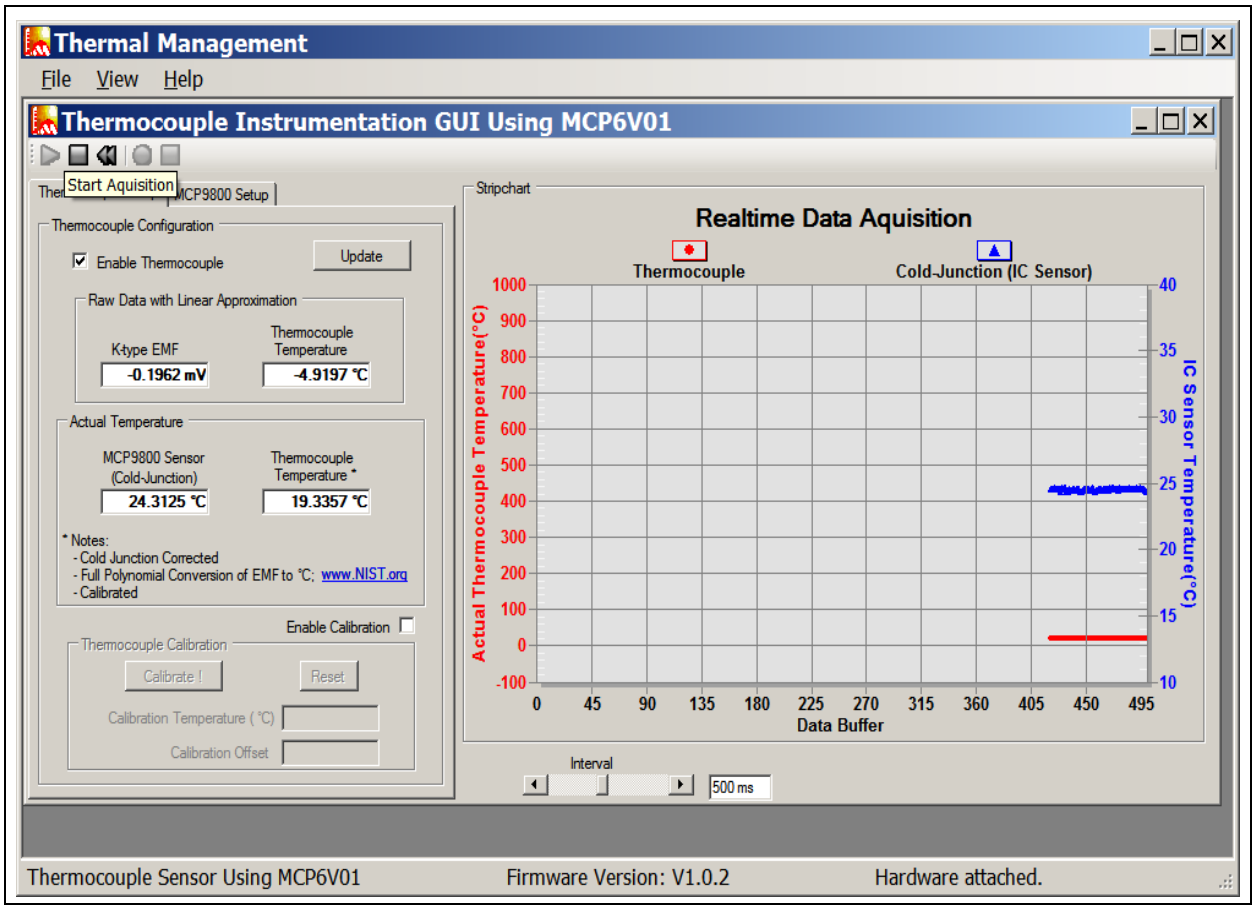

FIGURE 2-7: *Start Realtime Data Aquisition.*

© 2008 Microchip Technology Inc.

Appendix A. Schematic and Layout

A.1 INTRODUCTION

This appendix contains the following schematics and layouts for the MCP6V01 Thermocouple Auto-Zeroed Reference Design:

- Board – Schematic
- Board – Top Silk Layer
- Board – Top Metal Layer
- Board – Metal Layer 2
- Board – Metal Layer 3
- Board – Bottom Silk Layer
- Board – Bottom Metal Layer

A.2 BOARD - SCHEMATIC

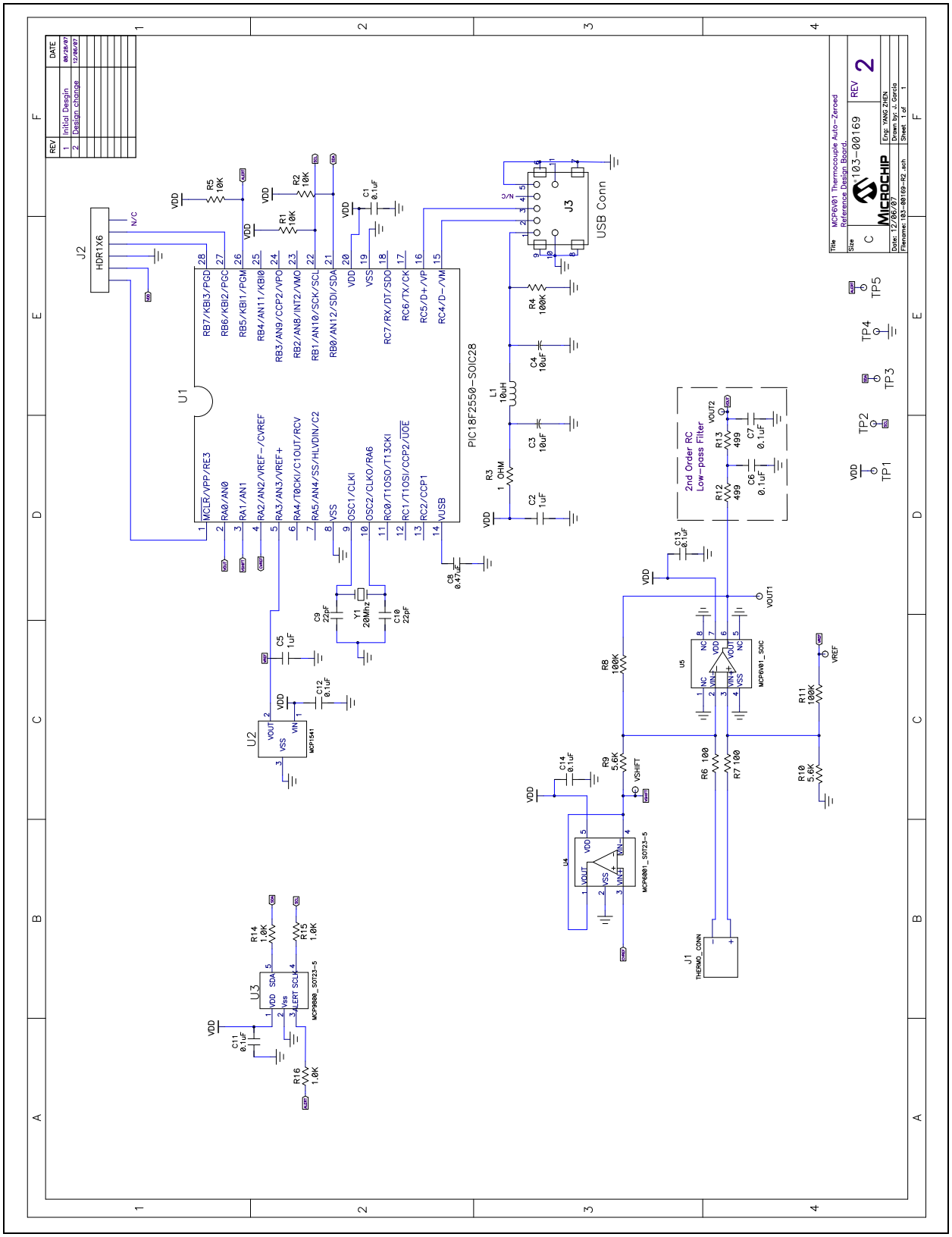

© 2008 Microchip Technology Inc.

A.3 BOARD - TOP SILK LAYER

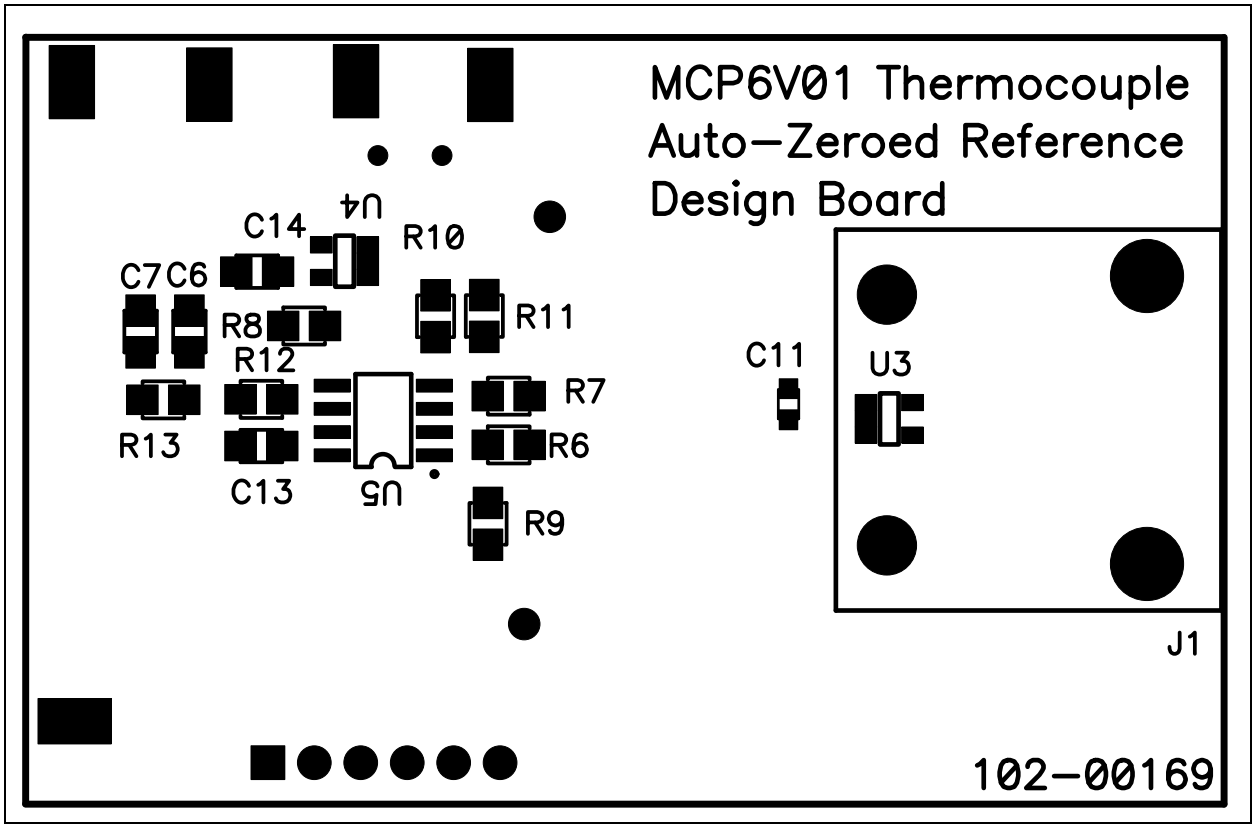

A.4 BOARD - TOP METAL LAYER

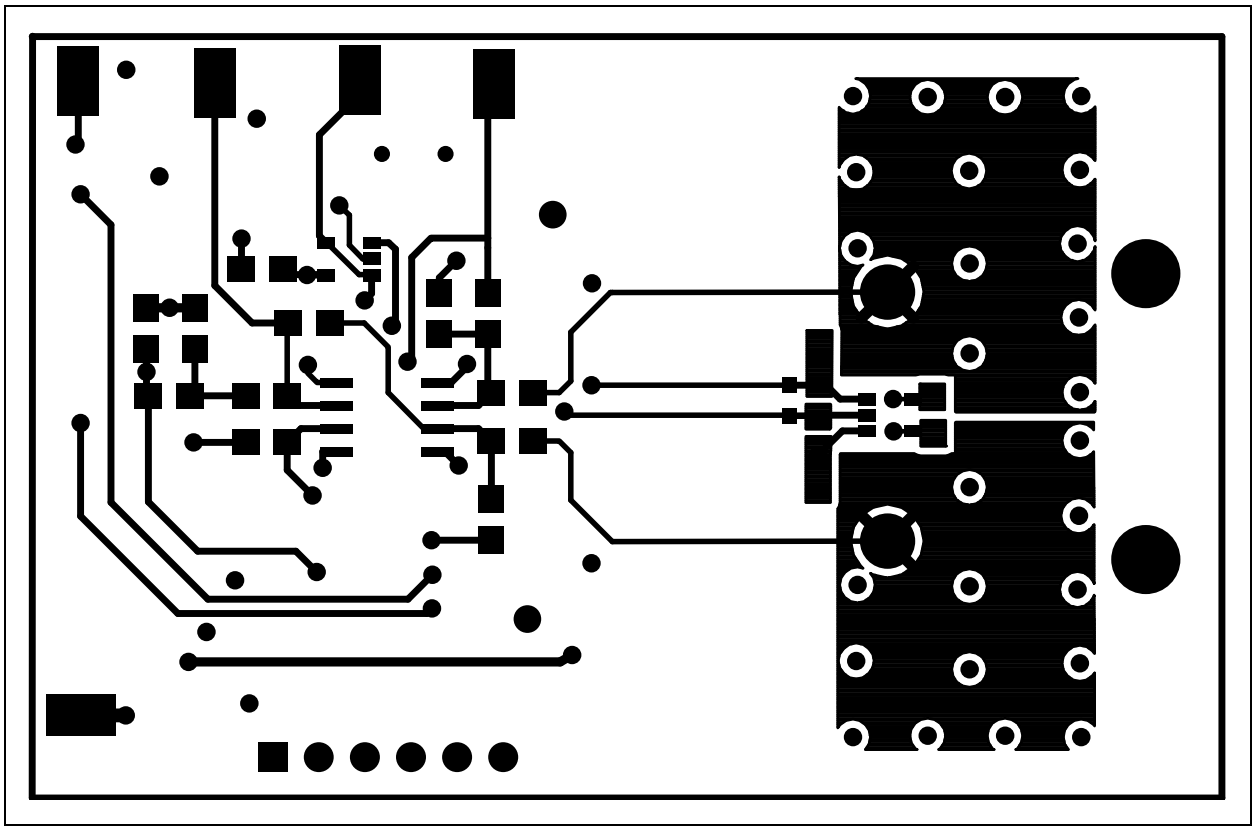

A.5 BOARD - METAL LAYER 2

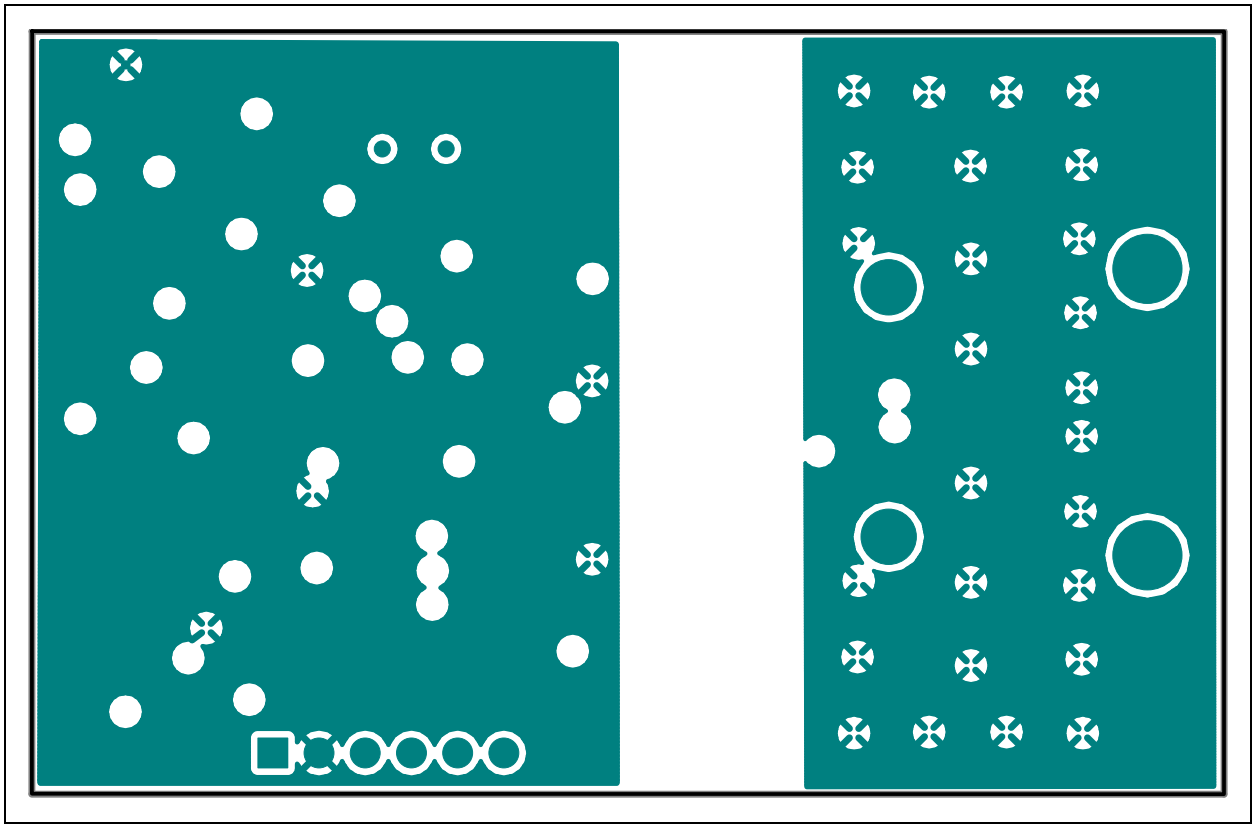

A.6 BOARD - METAL LAYER 3

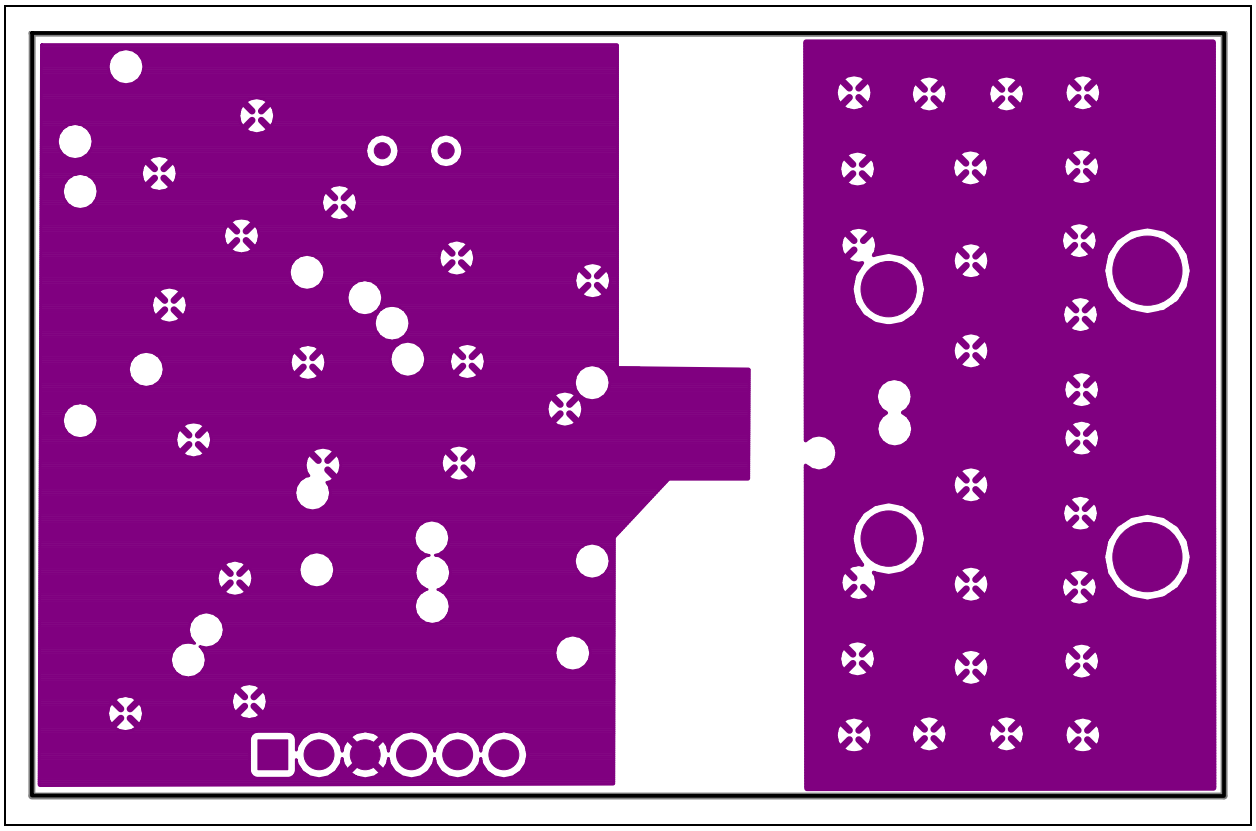

© 2008 Microchip Technology Inc.

A.7 BOARD - BOTTOM SILK LAYER (BOTTOM VIEW)

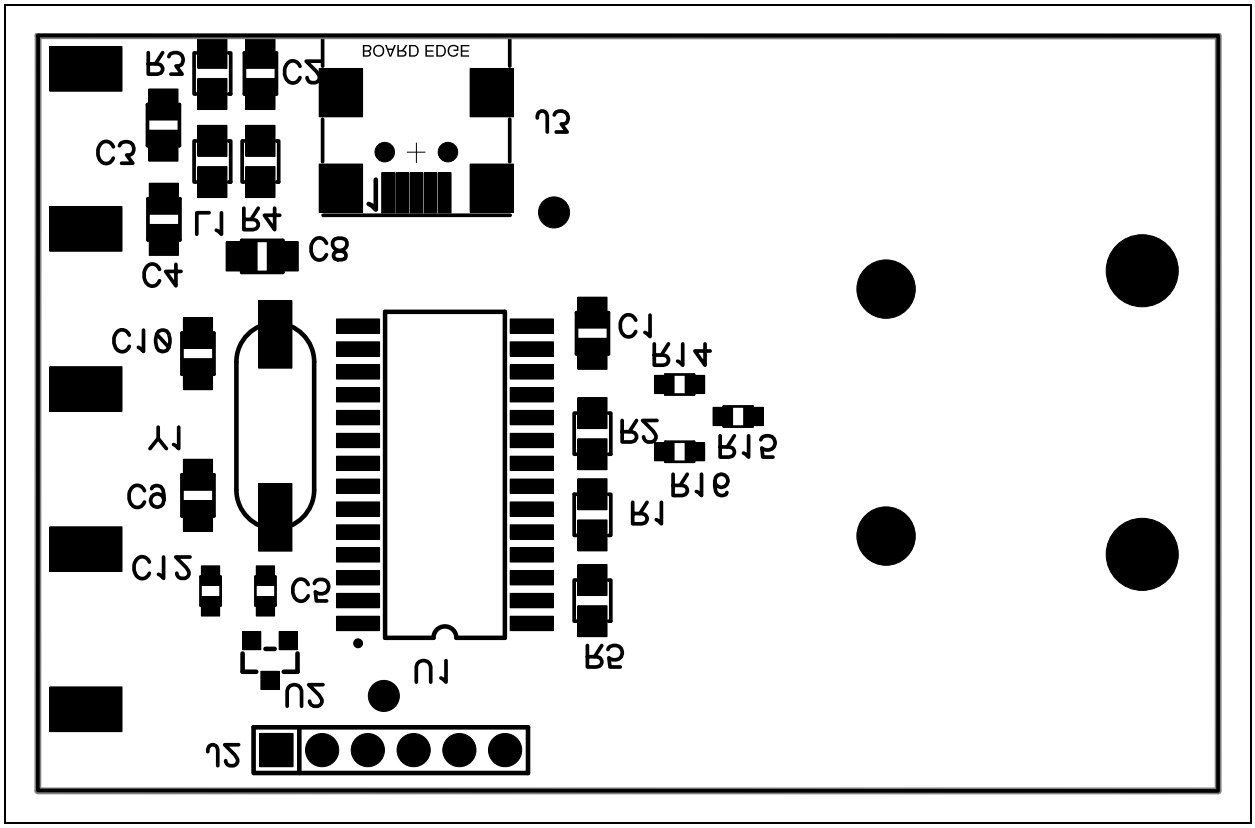

A.8 BOARD - BOTTOM METAL LAYER

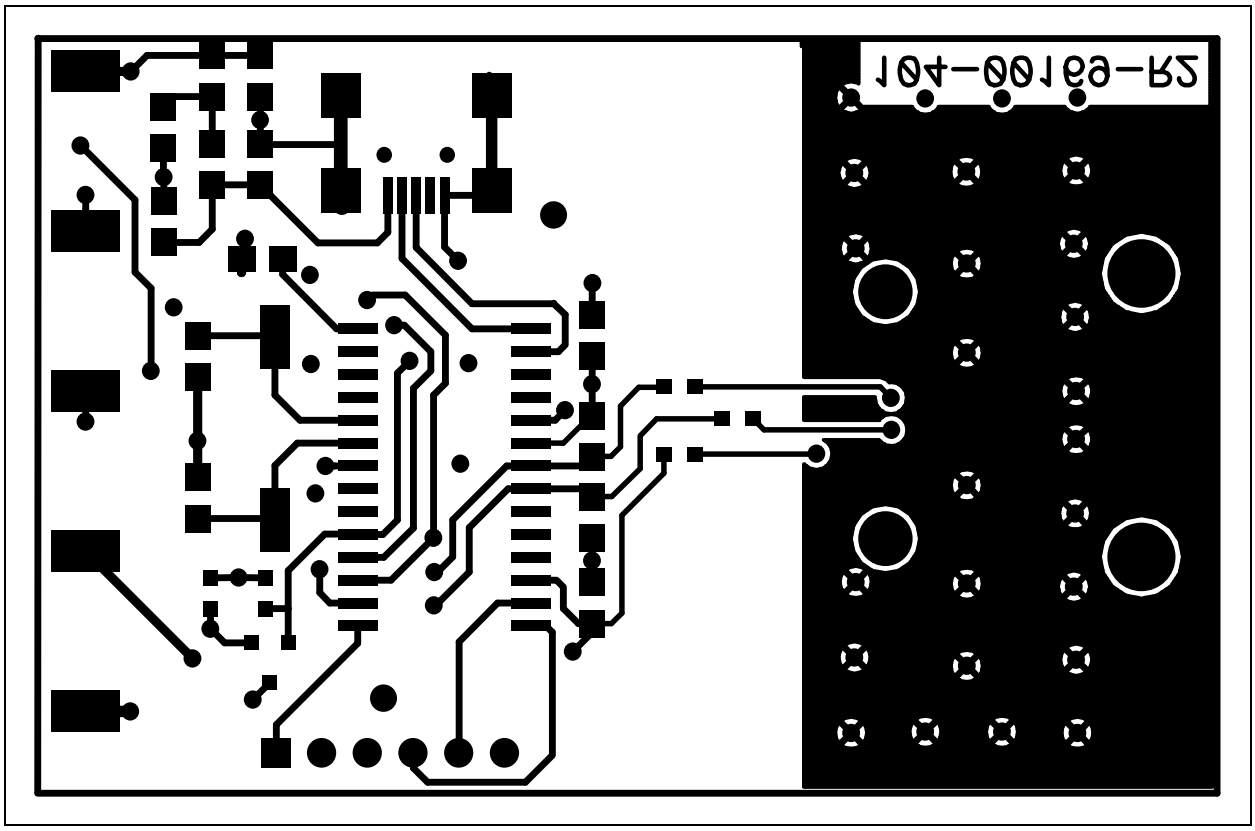

NOTES:

© 2008 Microchip Technology Inc.

Appendix B. Bill Of Materials (BOM)

TABLE B-1: BILL OF MATERIALS (BOM)

Qty	Reference	Description	Manufacturer	Part Number
5	C1, C6, C7, C13, C14	CAP .1UF 25V CERAMIC X7R 0805	Panasonic® - ECG	ECJ-2VB1E104K
1	C2	CAP 1.0UF 25V CERAMIC F 0805	Panasonic - ECG	ECJ-2FF1E105Z
2	C3, C4	CAP CER 10UF 16V Y5V 0805	Murata Electronics® North America	GRM21BF51C106ZE15L
1	C5	CAP 1.0UF 25V CERAMIC F 0603	Panasonic - ECG	ECJ-1VF1E105Z
1	C8	CAP .47UF 25V CERAMIC Y5V 0805	Panasonic - ECG	ECJ-2YF1E474Z
2	C9, C10	CAP 22PF 50V CERM CHIP 0805 SMD	Panasonic - ECG	ECJ-2VC1H220J
2	C11, C12	CAP .1UF 25V CERAMIC X7R 0603	Panasonic - ECG	ECJ-1VB1E104K
1	J1	Circuit Board Thermocouple Connectors, Standard	OMEGA	PCC-SMP-K-100
1	J2	HEADER 1X6 DO NOT POPULATE	—	—
1	J3	CONN RECEPT MINI USB2.0 5POS	Hirose Electronic Co Ltd	UX60-MB-5ST
1	L1	INDUCTOR 10UH 100MA 0805	Murata Electronics North America	LQM21FN100M70L
1	PCB	RoHS Compliant Bare PCB, Thermocouple Auto-Zero RD Board	—	104-00169
3	R1, R2, R5	RES 10.0K OHM 1/8W 1% 0805 SMD	Panasonic - ECG	ERJ-6ENF1002V
1	R3	RES 1.0 OHM 1/8W 1% 0805 SMD	Panasonic - ECG	ERJ-6RQF1R0V
1	R4	RES 100K OHM 1/8W 1% 0805 SMD	Panasonic - ECG	ERJ-6ENF1003V
2	R6, R7	RES 100 OHM 1/10W 0.1% 0805 SMD	Panasonic - ECG	ERA-6AEB101V
2	R8, R11	RES 100K OHM 1/10W 0.1% 0805 SMD	Panasonic - ECG	ERA-6AEB104V
2	R9, R10	RES 5.6K OHM 1/10W 0.1% 0805 SMD	Panasonic - ECG	ERA-6AEB562V
2	R12, R13	RES 499 OHM 1/8W 1% 0805 SMD	Panasonic - ECG	ERJ-6ENF4990V

Note 1: The components listed in this Bill of Materials are representative of the PCB assembly. The released BOM used in manufacturing uses all RoHS-compliant components.

TABLE B-1: BILL OF MATERIALS (BOM) (CONTINUED)

Qty	Reference	Description	Manufacturer	Part Number
3	R14, R15, R16	RES 1.0K OHM 1/10W 1% 0603 SMD	Panasonic - ECG	ERJ-3EKF1001V
1	Thermocouples (5 Per Pack)	Ready-Made Insulated Thermocouples with Kapton, PFA, Glass Braid Insulation and Molded Connectors	OMEGA	5SRTC-TT-K-24-36 (5 Pcs. Per Pack)
10	TP1---TP10	TEST POINT PC COMPACT SMT	Keystone Electronics®	5016
1	U1	28/40/44-Pin, High-Performance, Enhanced Flash, USB Microcontrollers with nanoWatt Technology	Microchip Technology Inc.	PIC18F2550-I/SO
1	U2	4.096V Voltage Reference	Microchip Technology Inc.	MCP1541T-I/TT
1	U3	Memory Module Digital Temperature Sensor, MCP9800	Microchip Technology Inc.	MCP9800A0T-M/OTG
1	U4	MCP6001, SOT-23-5	Microchip Technology Inc.	MCP6001T-I/OT
1	U5	MCP60V1, SOIC-8	Microchip Technology Inc.	MCP6V01T-E/SN
1	Y1	CRYSTAL 20.0000 MHZ SERIES SMT	CTS-Frequency Controls	ATS200SM

Note 1: The components listed in this Bill of Materials are representative of the PCB assembly. The released BOM used in manufacturing uses all RoHS-compliant components.

© 2008 Microchip Technology Inc.

NOTES:

WORLDWIDE SALES AND SERVICE

AMERICAS

Corporate Office
2355 West Chandler Blvd.
Chandler, AZ 85224-6199
Tel: 480-792-7200
Fax: 480-792-7277
Technical Support:
http://support.microchip.com
Web Address:
www.microchip.com

Atlanta
Duluth, GA
Tel: 678-957-9614
Fax: 678-957-1455

Boston
Westborough, MA
Tel: 774-760-0087
Fax: 774-760-0088

Chicago
Itasca, IL
Tel: 630-285-0071
Fax: 630-285-0075

Dallas
Addison, TX
Tel: 972-818-7423
Fax: 972-818-2924

Detroit
Farmington Hills, MI
Tel: 248-538-2250
Fax: 248-538-2260

Kokomo
Kokomo, IN
Tel: 765-864-8360
Fax: 765-864-8387

Los Angeles
Mission Viejo, CA
Tel: 949-462-9523
Fax: 949-462-9608

Santa Clara
Santa Clara, CA
Tel: 408-961-6444
Fax: 408-961-6445

Toronto
Mississauga, Ontario,
Canada
Tel: 905-673-0699
Fax: 905-673-6509

ASIA/PACIFIC

Asia Pacific Office
Suites 3707-14, 37th Floor
Tower 6, The Gateway
Harbour City, Kowloon
Hong Kong
Tel: 852-2401-1200
Fax: 852-2401-3431

Australia - Sydney
Tel: 61-2-9868-6733
Fax: 61-2-9868-6755

China - Beijing
Tel: 86-10-8528-2100
Fax: 86-10-8528-2104

China - Chengdu
Tel: 86-28-8665-5511
Fax: 86-28-8665-7889

China - Hong Kong SAR
Tel: 852-2401-1200
Fax: 852-2401-3431

China - Nanjing
Tel: 86-25-8473-2460
Fax: 86-25-8473-2470

China - Qingdao
Tel: 86-532-8502-7355
Fax: 86-532-8502-7205

China - Shanghai
Tel: 86-21-5407-5533
Fax: 86-21-5407-5066

China - Shenyang
Tel: 86-24-2334-2829
Fax: 86-24-2334-2393

China - Shenzhen
Tel: 86-755-8203-2660
Fax: 86-755-8203-1760

China - Wuhan
Tel: 86-27-5980-5300
Fax: 86-27-5980-5118

China - Xiamen
Tel: 86-592-2388138
Fax: 86-592-2388130

China - Xian
Tel: 86-29-8833-7252
Fax: 86-29-8833-7256

China - Zhuhai
Tel: 86-756-3210040
Fax: 86-756-3210049

ASIA/PACIFIC

India - Bangalore
Tel: 91-80-4182-8400
Fax: 91-80-4182-8422

India - New Delhi
Tel: 91-11-4160-8631
Fax: 91-11-4160-8632

India - Pune
Tel: 91-20-2566-1512
Fax: 91-20-2566-1513

Japan - Yokohama
Tel: 81-45-471- 6166
Fax: 81-45-471-6122

Korea - Daegu
Tel: 82-53-744-4301
Fax: 82-53-744-4302

Korea - Seoul
Tel: 82-2-554-7200
Fax: 82-2-558-5932 or
82-2-558-5934

Malaysia - Kuala Lumpur
Tel: 60-3-6201-9857
Fax: 60-3-6201-9859

Malaysia - Penang
Tel: 60-4-227-8870
Fax: 60-4-227-4068

Philippines - Manila
Tel: 63-2-634-9065
Fax: 63-2-634-9069

Singapore
Tel: 65-6334-8870
Fax: 65-6334-8850

Taiwan - Hsin Chu
Tel: 886-3-572-9526
Fax: 886-3-572-6459

Taiwan - Kaohsiung
Tel: 886-7-536-4818
Fax: 886-7-536-4803

Taiwan - Taipei
Tel: 886-2-2500-6610
Fax: 886-2-2508-0102

Thailand - Bangkok
Tel: 66-2-694-1351
Fax: 66-2-694-1350

EUROPE

Austria - Wels
Tel: 43-7242-2244-39
Fax: 43-7242-2244-393

Denmark - Copenhagen
Tel: 45-4450-2828
Fax: 45-4485-2829

France - Paris
Tel: 33-1-69-53-63-20
Fax: 33-1-69-30-90-79

Germany - Munich
Tel: 49-89-627-144-0
Fax: 49-89-627-144-44

Italy - Milan
Tel: 39-0331-742611
Fax: 39-0331-466781

Netherlands - Drunen
Tel: 31-416-690399
Fax: 31-416-690340

Spain - Madrid
Tel: 34-91-708-08-90
Fax: 34-91-708-08-91

UK - Wokingham
Tel: 44-118-921-5869
Fax: 44-118-921-5820

01/02/08

© 2008 Microchip Technology Inc.

Компания «ЭлектроПласт» предлагает заключение долгосрочных отношений при поставках импортных электронных компонентов на взаимовыгодных условиях!

Наши преимущества:

- Оперативные поставки широкого спектра электронных компонентов отечественного и импортного производства напрямую от производителей и с крупнейших мировых складов;
- Поставка более 17-ти миллионов наименований электронных компонентов;
- Поставка сложных, дефицитных, либо снятых с производства позиций;
- Оперативные сроки поставки под заказ (от 5 рабочих дней);
- Экспресс доставка в любую точку России;
- Техническая поддержка проекта, помощь в подборе аналогов, поставка прототипов;
- Система менеджмента качества сертифицирована по Международному стандарту ISO 9001;
- Лицензия ФСБ на осуществление работ с использованием сведений, составляющих государственную тайну;
- Поставка специализированных компонентов (Xilinx, Altera, Analog Devices, Intersil, Interpoint, Microsemi, Aeroflex, Peregrine, Syfer, Eurofarad, Texas Instrument, Miteq, Cobham, E2V, MA-COM, Hittite, Mini-Circuits,General Dynamics и др.);

Помимо этого, одним из направлений компании «ЭлектроПласт» является направление «Источники питания». Мы предлагаем Вам помощь Конструкторского отдела:

- Подбор оптимального решения, техническое обоснование при выборе компонента;
- Подбор аналогов;
- Консультации по применению компонента;
- Поставка образцов и прототипов;
- Техническая поддержка проекта;
- Защита от снятия компонента с производства.

Как с нами связаться

Телефон: 8 (812) 309 58 32 (многоканальный)
Факс: 8 (812) 320-02-42
Электронная почта: org@eplast1.ru
Адрес: 198099, г. Санкт-Петербург, ул. Калинина, дом 2, корпус 4, литера А.