High Voltage Current Shunt Monitor

AD8212

FEATURES

Adjustable gain
High common-mode voltage range
- **7 V to 65 V typical**
- **7 V to >500 V with external pass transistor**

Current output
Integrated 5 V series regulator
8-lead MSOP package
Operating temperature range of –40°C to +125°C

APPLICATIONS

Current shunt measurement
Motor controls
DC-to-DC converters
Power supplies
Battery monitoring
Remote sensing

FUNCTIONAL BLOCK DIAGRAM

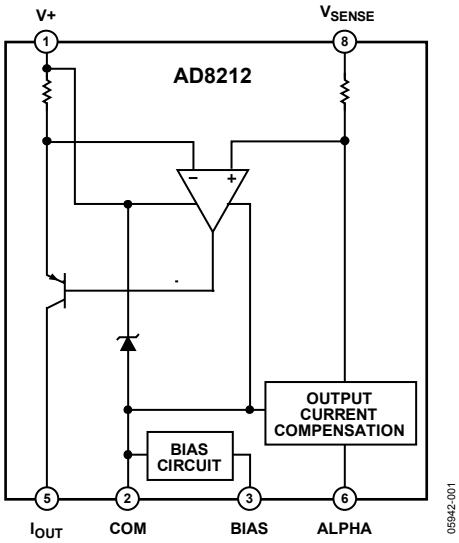

Figure 1.

GENERAL DESCRIPTION

The AD8212 is a high common-mode voltage, current shunt monitor. It accurately amplifies a small differential input voltage in the presence of large common-mode voltages up to 65 V (>500 V with an external PNP transistor).

The AD8212 is ideal for current monitoring across a shunt resistor in applications controlling loads, such as motors and solenoids. The current output of the device is proportional to the input differential voltage. The user can select an external resistor to set the desired gain. The typical common-mode voltage range of the AD8212 is 7 V to 65 V.

Another feature of the AD8212 is high voltage operation, which is achieved by using an external high voltage breakdown PNP transistor. In this configuration, the common-mode range of the AD8212 is equal to the breakdown of the external PNP transistor. Therefore, operation at several hundred volts is easily achieved (see Figure 23).

The AD8212 features a patented output base current compensation circuit for high voltage operation mode. This ensures that no base current is lost through the external transistor and excellent output accuracy is maintained regardless of common-mode voltage or temperature.

Rev. B
Information furnished by Analog Devices is believed to be accurate and reliable. However, no responsibility is assumed by Analog Devices for its use, nor for any infringements of patents or other rights of third parties that may result from its use. Specifications subject to change without notice. No license is granted by implication or otherwise under any patent or patent rights of Analog Devices. Trademarks and registered trademarks are the property of their respective owners.

One Technology Way, P.O. Box 9106, Norwood, MA 02062-9106, U.S.A.
Tel: 781.329.4700 **www.analog.com**
Fax: 781.461.3113 **©2007–2009 Analog Devices, Inc. All rights reserved.**

TABLE OF CONTENTS

Features ... 1
Applications ... 1
Functional Block Diagram ... 1
General Description ... 1
Revision History ... 2
Specifications ... 3
Absolute Maximum Ratings ... 4
ESD Caution ... 4
Pin Configuration and Function Descriptions ... 5
Typical Performance Characteristics ... 6
Theory of Operation ... 9
Normal Operation (7 V to 65 V Supply (V+) Range) ... 9
High Voltage Operation Using an External PNP Transistor 10
Output Current Compensation Circuit ... 10
Applications Information ... 11
General High-Side Current Sensing ... 11
Motor Control ... 11
500 V Current Monitor ... 11
Bidirectional Current Sensing ... 12
Outline Dimensions ... 13
Ordering Guide ... 13

REVISION HISTORY

5/09—Rev. A to Rev. B

Changes to Ordering Guide ... 13

11/07—Rev. 0 to Rev. A

Increased Operating Temperature Range ... Universal

5/07—Revision 0: Initial Version

SPECIFICATIONS

V_S = 15 V, T_{OPR} = −40°C to +125°C, T_A = 25°C, unless otherwise noted.

Table 1.

Parameter	Conditions/Comments	Min	Typ	Max	Unit
SUPPLY VOLTAGE (V+)	No external pass transistor	7		65	V
	With external PNP transistor[1]	7		>500	V
SUPPLY CURRENT[2]	($I_{SUPPLY} = I_{OUT} + I_{BIAS}$)				
	V+ = 7 V to 65 V	220		720	µA
	High voltage operation, using external PNP	200		1500	µA
VOLTAGE OFFSET					
Offset Voltage (RTI)	T_A			±2	mV
Over Temperature (RTI)	T_{OPR}			±3	mV
Offset Drift	T_{OPR}			±10	µV/°C
INPUT					
Input Impedance					
Differential			2		kΩ
Common Mode (V_{CM})	V+ = 7 V to 65 V		5		MΩ
Voltage Range					
Differential	Maximum voltage between V+ and V_{SENSE}			500	mV
V_{SENSE} (Pin 8) Current[3]	V+ = 7 V to 65 V, T_{OPR}		100	200	nA
OUTPUT					
Transconductance			1000		µA/V
Current Range (I_{OUT})	7 V ≤ V+ ≤ 65 V, 0 mV to 500 mV differential input			500	µA
Gain Error for T_{OPR}	7 V ≤ V+ ≤ 65 V, with respect to 500 µA full scale			±1	%
Impedance			20		MΩ
Voltage Range		0		V+ − 5	V
REGULATOR					
Nominal Value	7 V ≤ V+ ≤ 65 V	4.80	5	5.20	V
PSRR	7 V ≤ V+ ≤ 65 V	80			dB
Bias Current (I_{BIAS})	T_{OPR}, 7 V ≤ V+ ≤ 65 V		185	200	µA
	T_{OPR}, high voltage operation	200		1000	µA
DYNAMIC RESPONSE					
Small Signal −3 dB Bandwidth	Gain = 10		1000		kHz
	Gain = 20		500		kHz
	Gain = 50		100		kHz
Settling Time	Within 0.1% of the true output, gain = 20		2		µs
ALPHA PIN INPUT CURRENT				25	µA
NOISE					
0.1 Hz to 10 Hz, RTI			1.1		µV p-p
Spectral Density, 1 kHz, RTI			40		nV/√Hz
TEMPERATURE RANGE					
For Specified Performance (T_{OPR})		−40		+125	°C

[1] Range dependent on the V_{CE} breakdown of the transistor.
[2] The AD8212 supply current in normal voltage operation (V+ = 7 V to 65 V) is the bias current (I_{BIAS}) added to output current (I_{OUT}). Output current varies upon input differential voltage and can range from 0 µA to 500 µA. I_{BIAS} in this mode of operation is typically 185 µA and 200 µA maximum. For high voltage operation mode, refer to the High Voltage Operation Using an External PNP Transistor section.
[3] The current of the amplifier into V_{SENSE} (Pin 8) increases when operating in high voltage mode. See the High Voltage Operation Using an External PNP Transistor section for more information.

ABSOLUTE MAXIMUM RATINGS

T_{OPR} = −40°C to +125°C, unless otherwise noted.

Table 2.

Parameter	Rating
Supply Voltage	65 V
Continuous Input Voltage	68 V
Reverse Supply Voltage	0.3 V
Operating Temperature Range	−40°C to +125°C
Storage Temperature Range	−40°C to +150°C
Output Short-Circuit Duration	Indefinite

Stresses above those listed under Absolute Maximum Ratings may cause permanent damage to the device. This is a stress rating only; functional operation of the device at these or any other conditions above those indicated in the operational section of this specification is not implied. Exposure to absolute maximum rating conditions for extended periods may affect device reliability.

ESD CAUTION

ESD (electrostatic discharge) sensitive device. Charged devices and circuit boards can discharge without detection. Although this product features patented or proprietary protection circuitry, damage may occur on devices subjected to high energy ESD. Therefore, proper ESD precautions should be taken to avoid performance degradation or loss of functionality.

PIN CONFIGURATION AND FUNCTION DESCRIPTIONS

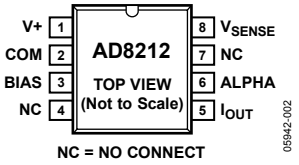

Figure 2. Pin Configuration

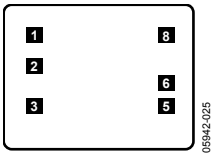

Figure 3. Metallization Diagram

Table 3. Pin Function Descriptions

Pin No.	Mnemonic	X Coordinate	Y Coordinate	Description
1	V+	−393	+219	Supply Voltage (Inverting Amplifier Input).
2	COM	−392	+67	Regulator Low Side.
3	BIAS	−392	−145	Bias Circuit Low Side.
4	NC	–	–	No Connect.
5	I_{OUT}	+386	−82	Output Current.
6	ALPHA	+386	+23	Current Compensation Circuit Input.
7	NC	+386	+118	No Connect.
8	V_{SENSE}	+386	+210	Noninverting Amplifier Input.

TYPICAL PERFORMANCE CHARACTERISTICS

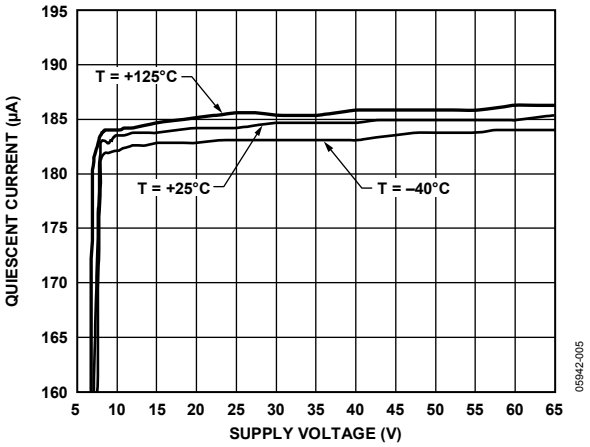

Figure 4. Supply Current vs. Supply (Pin V+) (I_{OUT} = 0 mA)

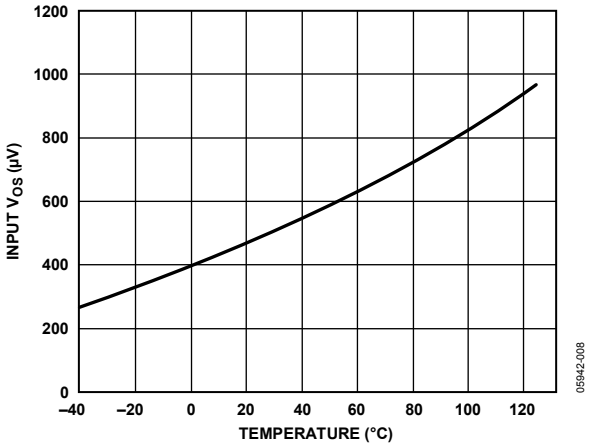

Figure 7. Input Offset Voltage vs. Temperature

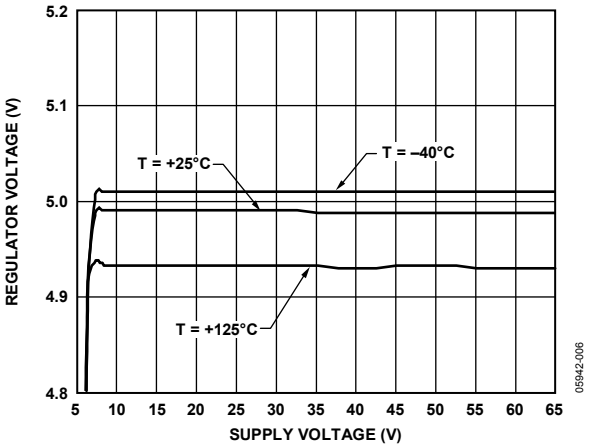

Figure 5. Regulator Voltage vs. Supply (Pin V+)

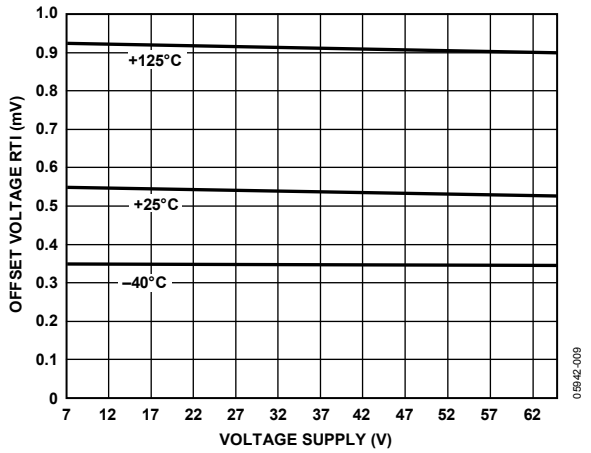

Figure 8 .Input Offset Voltage vs. Supply (Pin V+)

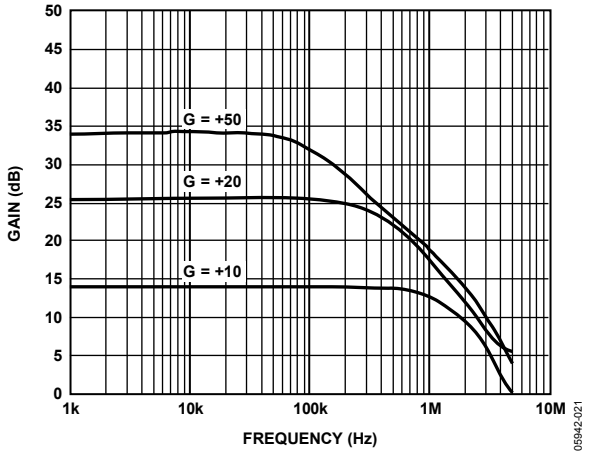

Figure 6. Gain vs. Frequency

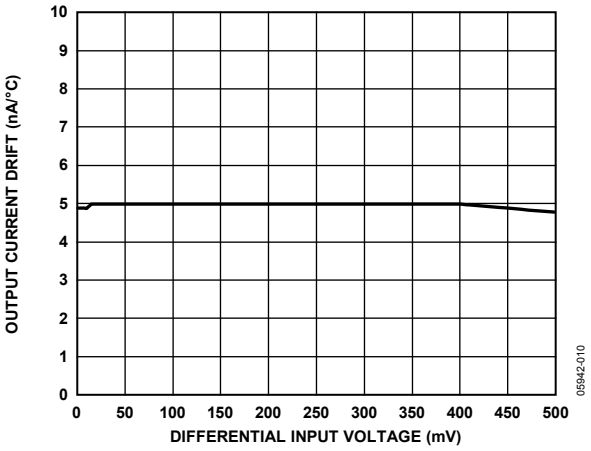

Figure 9. Output Current Drift vs. Differential Input Voltage

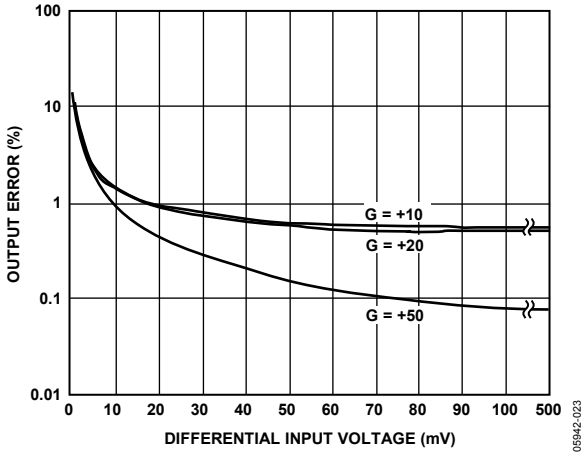

Figure 10. Total Output Error Due to Input Offset vs. Differential Input Voltage

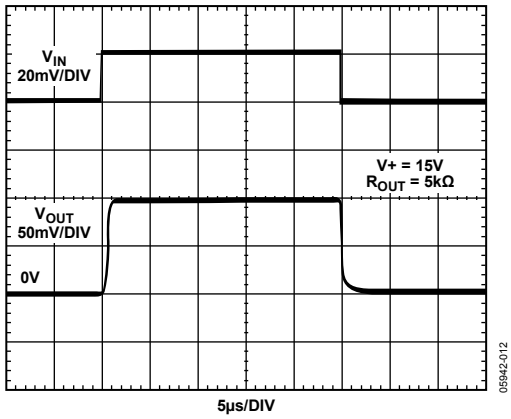

Figure 11. Step Response (Gain = 5)

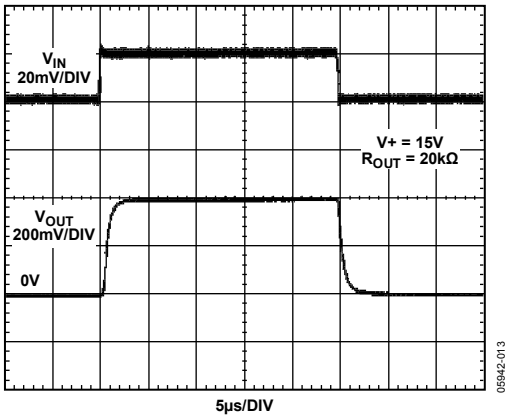

Figure 12. Step Response (Gain = 20)

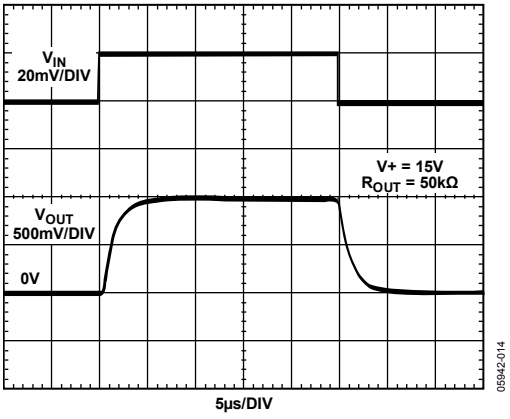

Figure 13. Step Response (Gain = 50)

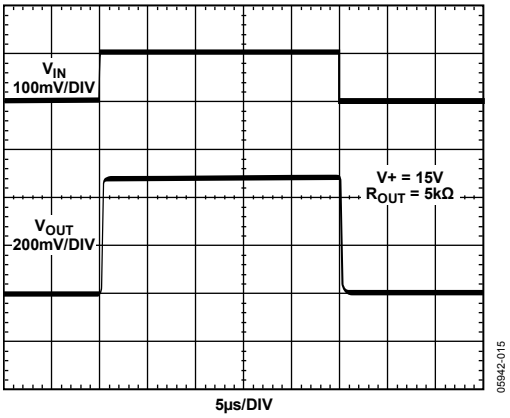

Figure 14. Step Response (Gain = 5)

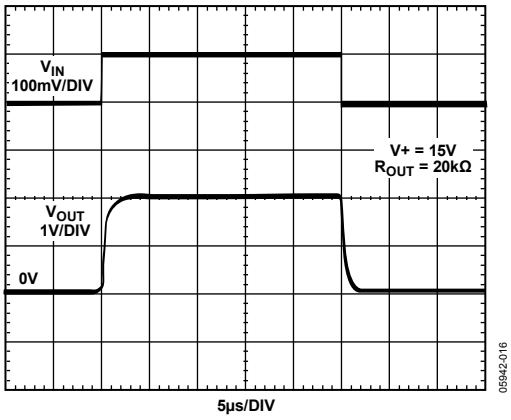

Figure 15. Step Response (Gain = 20)

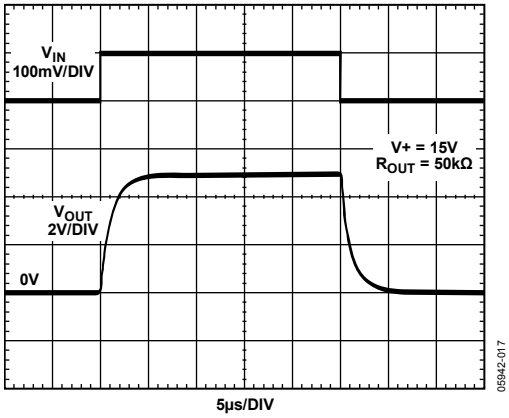

Figure 16. Step Response (Gain = 50)

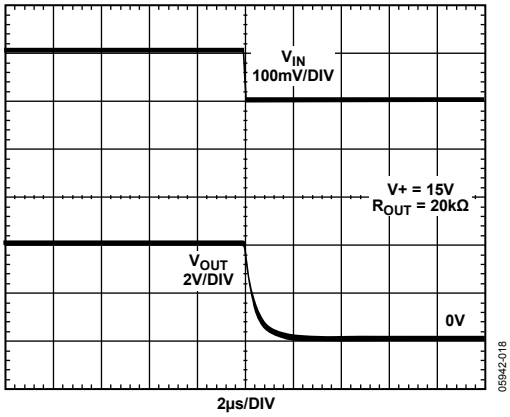

Figure 17. Step Response Falling

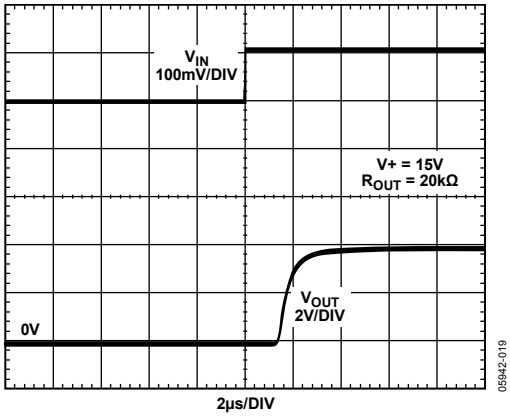

Figure 18. Step Response Rising

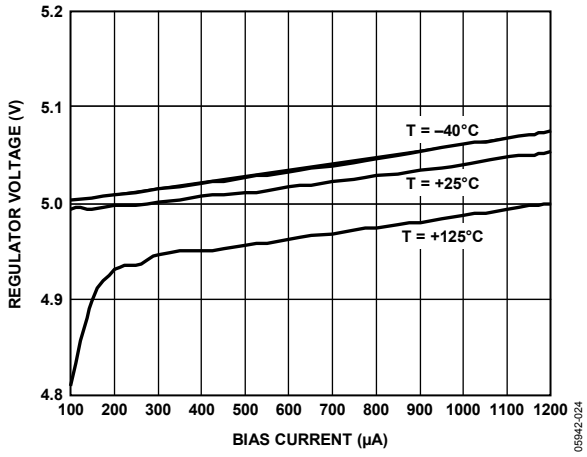

Figure 19. Regulator Voltage High Voltage Mode (I_{OUT} = 0 mA) vs. Bias Current

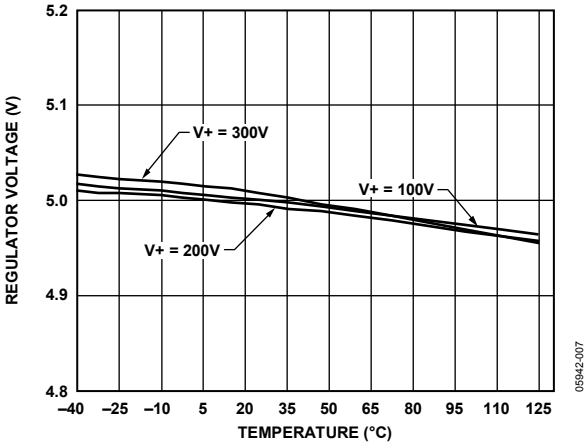

Figure 20. Regulator Voltage vs. Temperature (High Voltage Operation)

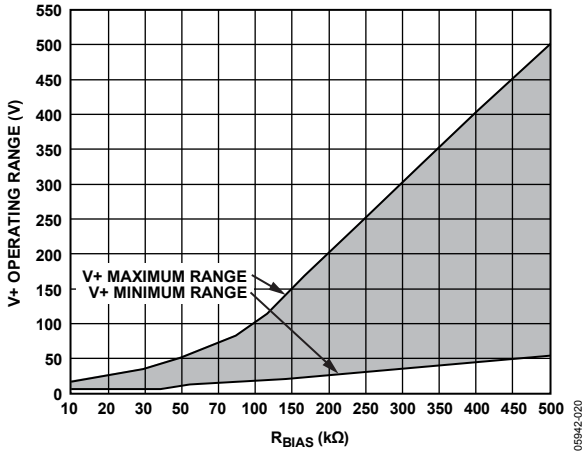

Figure 21. Supply Range (V+) vs. Bias Resistor Value (High Voltage Operation)

THEORY OF OPERATION

NORMAL OPERATION (7 V TO 65 V SUPPLY (V+) RANGE)

In typical applications, the AD8212 measures a small differential input voltage generated by a load current flowing through a shunt resistor.

The operational amplifier (A1) is connected across the shunt resistor (R_{SHUNT}) with its inverting input connected to the battery/supply side, and the noninverting input connected to the load side of the system. Amplifier A1 is powered via an internal series regulator (depicted as a Zener diode in Figure 22). This regulator maintains a constant 5 V between the battery/supply terminal of the AD8212 and COM (Pin 2), which represents the lowest common point of the internal circuitry.

A load current flowing through the external shunt resistor produces a voltage at the input terminals of the AD8212. Amplifier A1 responds by causing Transistor Q1 to conduct the necessary current through Resistor R1 to equalize the potential at both the inverting and noninverting inputs of Amplifier A1.

The current through the emitter of Transistor Q1 (I_{OUT}) is proportional to the input voltage (V_{SENSE}), and, therefore, the load current (I_{LOAD}) through the shunt resistor (R_{SHUNT}). The output current (I_{OUT}) is converted to a voltage by using an external resistor, the value of which is dependent on the input to output gain equation desired in the application.

The transfer function for the AD8212 is

$$I_{OUT} = (g_m \times V_{SENSE})$$

$$V_{SENSE} = I_{LOAD} \times R_{SHUNT}$$

$$V_{OUT} = I_{OUT} \times R_{OUT}$$

$$V_{OUT} = (V_{SENSE} \times R_{OUT})/1000$$

where:

g_m = 1000 µA/V.

In normal voltage operation mode, the bias circuit is connected to GND, as shown in Figure 22. In this mode, I_{BIAS} is typically 185 µA throughout the 7 V to 65 V (V+) range.

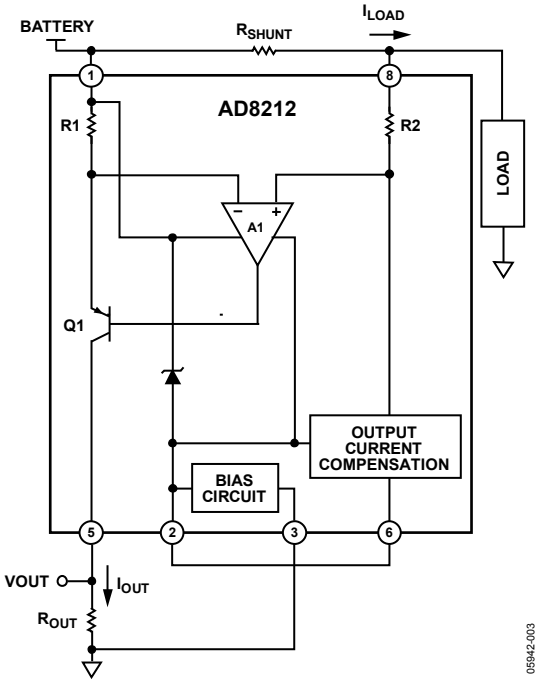

Figure 22. Typical Connection (7 V to 65 V Supply (Pin V+) Range)

When using the AD8212 as described, the battery/supply voltage in the system must be between 7 V to 65 V. The 7 V minimum supply range is necessary to turn on the internal regulator (shown as a Zener diode in Figure 22). This regulated voltage then remains a constant 5 V, regardless of the supply (V+) voltage. The 65 V maximum limit in this mode of operation is due to the breakdown voltage limitation of the AD8212 process.

Typically, a 1% resistor can be used to convert the output current to a voltage. Table 4 provides suggested R_{OUT} values.

Table 4. Suggested R_{OUT} Values

Gain (V/V)	R_{OUT} (kΩ)
1	1
10	10
20	20
50	49.9
100	100

HIGH VOLTAGE OPERATION USING AN EXTERNAL PNP TRANSISTOR

The AD8212 offers features that simplify measuring current in the presence of common-mode voltages greater than 65 V. This is achieved by connecting an external PNP transistor at the output of the AD8212, as shown in Figure 23. The V_{CE} breakdown voltage of this PNP becomes the operating common-mode range of the AD8212. PNP transistors with breakdown voltages exceeding 300 V are inexpensive and readily available in small packages.

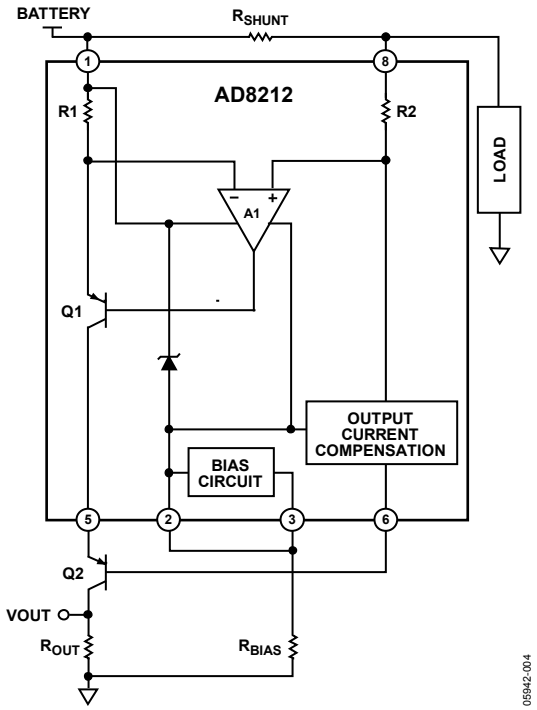

Figure 23. High Voltage Operation Using External PNP

The AD8212 features an integrated 5 V series regulator. This regulator ensures that at all times COM (Pin 2), which is the most negative of all the terminals, is always 5 V less than the supply voltage (V+). Assuming a battery voltage (V+) of 100 V, it follows that the voltage at COM (Pin 2) is

$$(V+) - 5\text{ V} = 95\text{ V}$$

The base emitter junction of Transistor Q2, in addition to the V_{be} of one internal transistor, makes the collector of Transistor Q1 approximately equal to

$$95\text{ V} + 2(V_{be(Q2)}) = 95\text{ V} + 1.2\text{ V} = 96.2\text{ V}$$

This voltage appears across external Transistor Q2. The voltage across Transistor Q1 is

$$100\text{ V} - 96.2\text{ V} = 3.8\text{ V}$$

In this manner, Transistor Q2 withstands 95.6 V and the internal Transistor Q1 is only subjected to voltages well below its breakdown capability.

In this mode of operation, the supply current (I_{BIAS}) of the AD8212 circuit increases based on the supply range and the R_{BIAS} resistor chosen. For example

if

$$V+ = 500\text{ V and } R_{BIAS} = 500\text{ k}\Omega$$

$$I_{BIAS} = (V+ - 5\text{ V})/R_{BIAS}$$

then,

$$I_{BIAS} = (500 - 5)/500\text{ k}\Omega = 990\ \mu\text{A}$$

In high voltage operation, it is recommended that I_{BIAS} remain within 200 µA to 1 mA. This ensures that the bias circuit is turned on, allowing the device to function as expected. At the same time, the current through the bias circuit/regulator is limited to 1 mA. Refer to Figure 19 and Figure 21 for I_{BIAS} and V+ information when using the AD8212 in a high voltage configuration.

When operating the AD8212, as depicted in Figure 23, Transistor Q2 can be a FET or a bipolar PNP transistor. The latter is much less expensive, however the magnitude of I_{OUT} conducted to the output resistor (R_{OUT}) is reduced by the amount of current lost through the base of the PNP. This leads to an error in the output voltage reading.

The AD8212 includes an integrated patented circuit, which compensates for the output current that is lost through the base of the external PNP transistor. This ensures that the correct transconductance of the amplifier is maintained. The user can opt for an inexpensive bipolar PNP, instead of a FET, while maintaining a comparable level of accuracy.

OUTPUT CURRENT COMPENSATION CIRCUIT

The base of the external PNP, Q2, is connected to ALPHA (Pin 6) of the AD8212. The current flowing in this path is mirrored inside the current compensation circuit. This current then flows in Resistor R2, which is the same value as Resistor R1. The voltage created by this current across Resistor R2, displaces the noninverting input of Amplifier A1 by the corresponding voltage. Amplifier A1 responds by driving the base of Transistor Q1 so as to force a similar voltage displacement across Resistor R1, thereby increasing I_{OUT}.

Because the current generated by the output compensation circuit is equal to the base current of Transistor Q2, and the resulting displacements across Resistor R1 and Resistor R2 result in equal currents, the increment of current added to the output current is equivalent to the base current of Transistor Q2. Therefore, the integrated output current compensation circuit has corrected I_{OUT} such that no error results from the base current lost at Transistor Q2.

This feature of the AD8212 greatly improves I_{OUT} accuracy and allows the user to choose an inexpensive bipolar PNP (with low beta) with which to monitor current in the presence of high voltages (typically several hundred volts).

APPLICATIONS INFORMATION

GENERAL HIGH-SIDE CURRENT SENSING

The AD8212 output is intended to drive high impedance nodes. Therefore, if interfacing with a converter, it is recommended that the output voltage across R_{OUT} be buffered, so that the gain of the AD8212 is not affected.

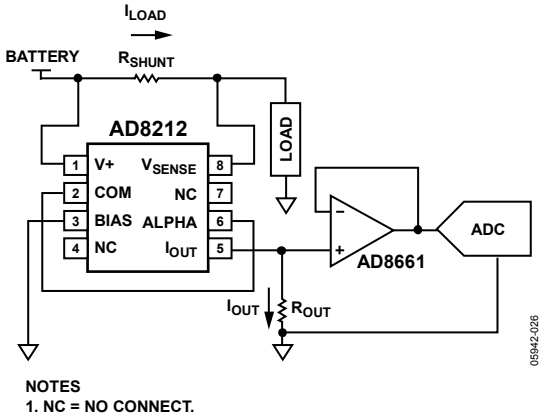

Figure 24. Normal Voltage Range Operation

Careful calculations must be made when choosing a gain resistor so as not to exceed the input voltage range of the converter. The output of the AD8212 can be as high as (V+) − 5 V. However, the true output maximum voltage is dependent upon the differential input voltage, and the resulting output current across R_{OUT}, which can be as high as 500 µA (based on a 500 mV maximum input differential limit).

MOTOR CONTROL

The AD8212 is a practical solution for high-side current sensing in motor control applications. In cases where the shunt resistor is referenced to battery and the current flowing is unidirectional, as shown in Figure 25, the AD8212 monitors the current with no additional supply pin necessary.

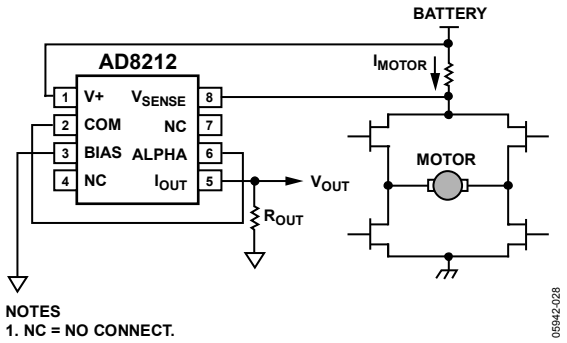

Figure 25. High-Side Current Sensing for Motor Control

500 V CURRENT MONITOR

As noted in the High Voltage Operation Using an External PNP Transistor section, the AD8212 common-mode voltage range is extended by using an external PNP transistor. This mode of operation is achievable with many amplifiers featuring a current output. However, typically an external Zener regulator must be added, along with a FET device, to withstand the common-mode voltage and maintain output current accuracy.

The AD8212 features an integrated regulator (which acts as a Zener regulator). It offers output current compensation that allows the user to maintain excellent output current accuracy by using any PNP transistor. Reliability is increased due to lower component count. Most importantly, the output current accuracy is high, allowing the user to choose an inexpensive PNP transistor to withstand the increased common-mode voltage.

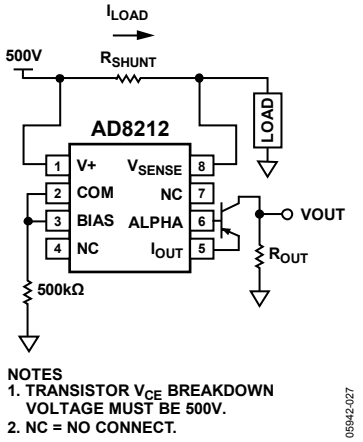

Figure 26. High Voltage Operation Using External PNP

BIDIRECTIONAL CURRENT SENSING

The AD8212 is a unidirectional current sensing device. Therefore, in power management applications where both the charge and load currents must be monitored, two devices can be used and connected as shown in Figure 27. In this case, $V_{OUT}1$ increases as I_{LOAD} flows through the shunt resistor. $V_{OUT}2$ increases when I_{CHARGE} flows through the input shunt resistor.

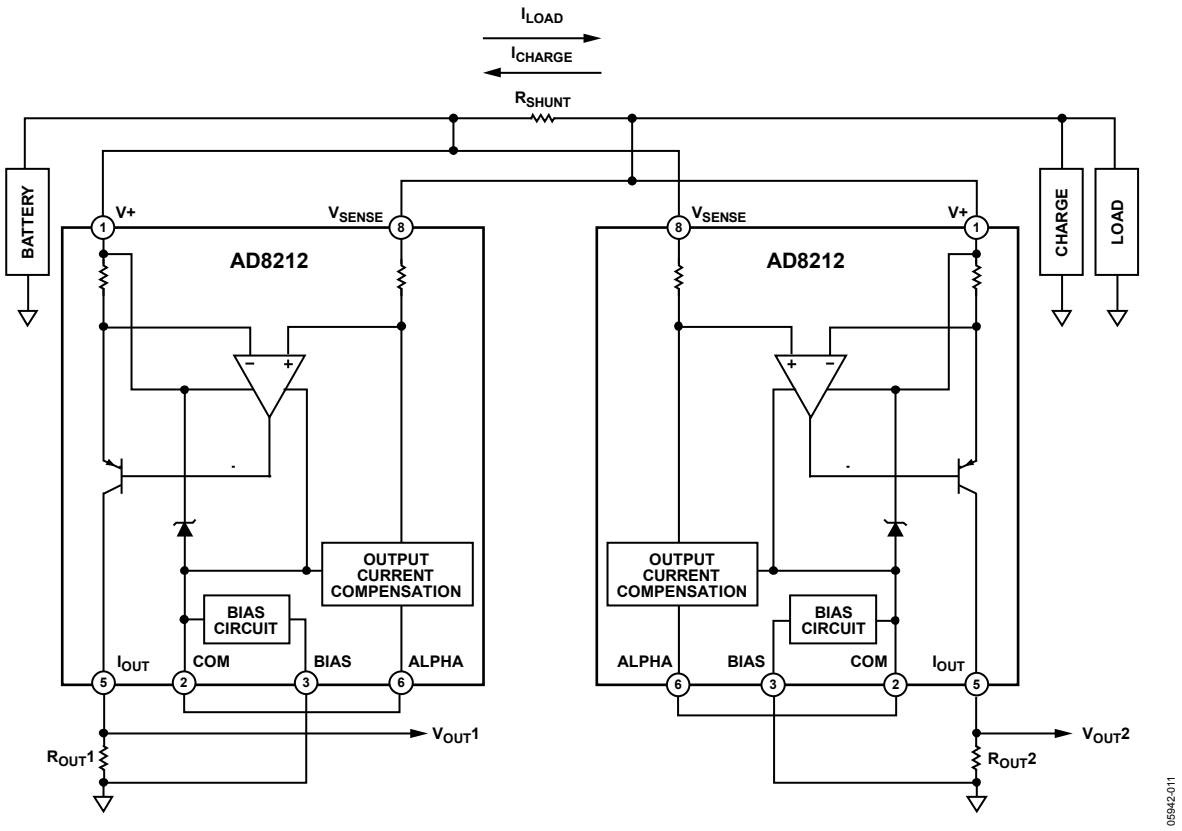

Figure 27. Bidirectional Current Sensing

OUTLINE DIMENSIONS

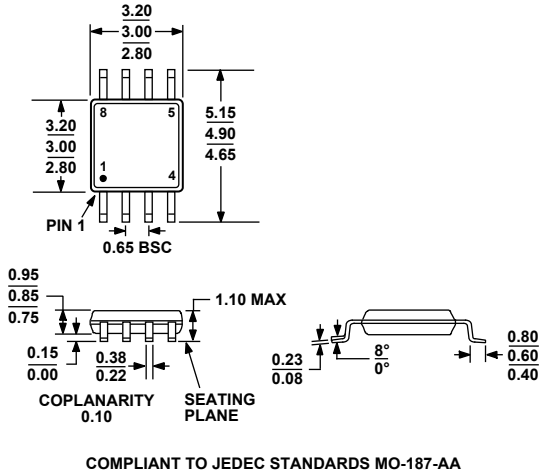

Figure 28. 8-Lead Mini Small Outline Package [MSOP] (RM-8)
Dimensions shown in millimeters

ORDERING GUIDE

Model	Temperature Range	Package Description	Package Option	Branding
AD8212YRMZ[1]	−40°C to +125°C	8-Lead MSOP	RM-8	Y04
AD8212YRMZ-RL[1]	−40°C to +125°C	8-Lead MSOP, 13″ Tape and Reel	RM-8	Y04
AD8212YRMZ-R7[1]	−40°C to +125°C	8-Lead MSOP, 7″ Tape and Reel	RM-8	Y04
AD8212WYRMZ[1]	−40°C to +125°C	8-Lead MSOP	RM-8	Y25
AD8212WYRMZ-RL[1]	−40°C to +125°C	8-Lead MSOP, 13″ Tape and Reel	RM-8	Y25
AD8212WYRMZ-R7[1]	−40°C to +125°C	8-Lead MSOP, 7″ Tape and Reel	RM-8	Y25

[1] Z = RoHS Compliant Part.

NOTES

NOTES

NOTES

©2007–2009 Analog Devices, Inc. All rights reserved. Trademarks and registered trademarks are the property of their respective owners.
D05942-0-5/09(B)

Компания «ЭлектроПласт» предлагает заключение долгосрочных отношений при поставках импортных электронных компонентов на взаимовыгодных условиях!

Наши преимущества:

- Оперативные поставки широкого спектра электронных компонентов отечественного и импортного производства напрямую от производителей и с крупнейших мировых складов;
- Поставка более 17-ти миллионов наименований электронных компонентов;
- Поставка сложных, дефицитных, либо снятых с производства позиций;
- Оперативные сроки поставки под заказ (от 5 рабочих дней);
- Экспресс доставка в любую точку России;
- Техническая поддержка проекта, помощь в подборе аналогов, поставка прототипов;
- Система менеджмента качества сертифицирована по Международному стандарту ISO 9001;
- Лицензия ФСБ на осуществление работ с использованием сведений, составляющих государственную тайну;
- Поставка специализированных компонентов (Xilinx, Altera, Analog Devices, Intersil, Interpoint, Microsemi, Aeroflex, Peregrine, Syfer, Eurofarad, Texas Instrument, Miteq, Cobham, E2V, MA-COM, Hittite, Mini-Circuits,General Dynamics и др.);

Помимо этого, одним из направлений компании «ЭлектроПласт» является направление «Источники питания». Мы предлагаем Вам помощь Конструкторского отдела:

- Подбор оптимального решения, техническое обоснование при выборе компонента;
- Подбор аналогов;
- Консультации по применению компонента;
- Поставка образцов и прототипов;
- Техническая поддержка проекта;
- Защита от снятия компонента с производства.

Как с нами связаться

Телефон: 8 (812) 309 58 32 (многоканальный)
Факс: 8 (812) 320-02-42
Электронная почта: org@eplast1.ru
Адрес: 198099, г. Санкт-Петербург, ул. Калинина, дом 2, корпус 4, литера А.