ITEM	Q'TY	PART NUMBER	PART DESCRIPTION
1	1	3XX-F	T-1 (3mm) Flanged LED, See Pages 2 to 4
2	1	ELM 2-XXX	Extruded, Self-Retaining LED Spacer

REV.	DESCRIPTION	DATE	APPROVED
A	Engineering Update w/o Changes	03/05/04	M. C.
B	Update LED, EMN-ELMXXXX3XX	08/22/06	M. C.
C	Removed Tolerance Note.	09/03/08	M. C.
D	LED Specs and Dimensions Update.	07/22/10	T. Y.
E	Added Tape & Reel Options.	06/06/11	T. Y.
F	Tape & Reel Design Update.	11/21/11	T. Y.
G	LED Offering List Update	07/27/12	T. Y.
H	Corrected LED Typo	08/09/13	T. Y.
J	Corrected P/N Typo in BOM	09/19/13	T. Y.

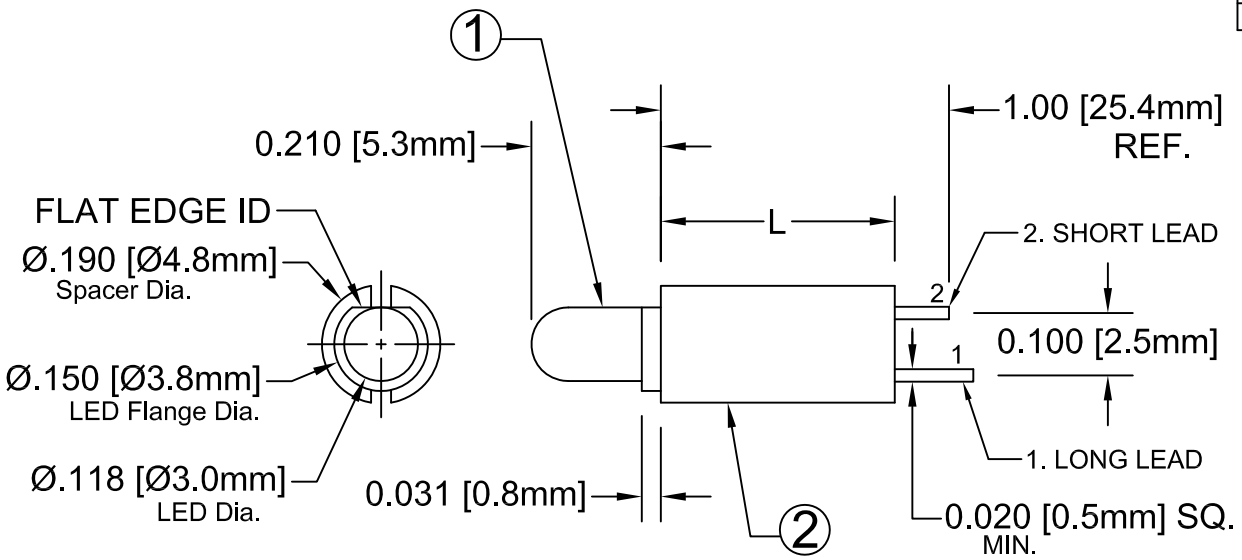

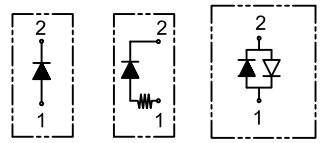

Single Color | 5V or 12V | Bi-Color

BI-COLOR POLARITY		
LED P/N	(1) Cathode	(2) Cathode
3BC-F	Green	Red
3BC-Y/G-F	Green	Yellow
3BC-R/Y-F	Yellow	Red
3BC-A/G-F	Green	Amber

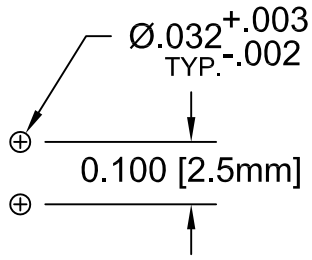

Recommended Mounting Holes

ABSOLUTE MAXIMUM RATINGS (Ta=25°C)

REVERSE VOLTAGE	5V
REVERSE CURRENT	100uA
OPERATING TEMPERATURE RANGE	−25° C – 85° C
STORAGE TEMPERATURE	−30° C – 100° C
LEAD SOLDERING TEMPERATURE(1/16" FROM BODY)	260° C FOR 5 SECONDS

STANDARD TOLERANCE
(UNLESS OTHERWISE SPECIFIED)

DECIMALS		ANGULAR	
.X	± .1	X°	± 1°
.XX	± .02		
.XXX	± .010		

BIVAR®
4 THOMAS, IRVINE, CA. 92618
TEL: (949) 951-8808 FAX: (949) 951-3974

TITLE: EXTRUDED VERTICAL T-1 (3mm) LED STANDARD PROFILE SPACER ASSY

DESIGNED:	DATE:	PART NO:	REVISION:
MInh Doan	07/27/12	ELM2XXX3XX	J
CHECKED: T. Yin	DATE: 07/27/12	CAGE CODE : 32559	SHEET # 1 OF 5

CAD GENERATED DOCUMENT, DO NOT MEASURE DRAWING.

REV.	DESCRIPTION	DATE	APPROVED
	SEE SHEET#1.		

LED Assy. No.	Chip			Lens Appearance	Electro-Optical Data @ 20mA				Viewing Angle 2 θ ½ (Deg)	LED P/N
	Material	Peak Wave Length	Emitted Color		If (mA)	Vf (V)		Iv (mcd)		
					MAX	TYP	MAX	TYP		
ELM2XXX3BWC	GaN/SiC	430	BLUE	WATER CLEAR	25	4	4.5	15	20	3BWC-F
ELM2XXX3BWD	GaN/SiC	430	BLUE	DIFFUSED	25	4	4.5	10	35	3BWD-F
ELM2XXX3BWT	GaN/SiC	430	BLUE	TINTED	25	4	4.5	15	20	3BWT-F
ELM2XXX3GC	GaP/GaP	568	GREEN	WATER CLEAR	30	2.1	2.8	40	20	3GC-F
ELM2XXX3GD	GaP/GaP	568	GREEN	DIFFUSED	30	2.1	2.8	25	35	3GD-F
ELM2XXX3GT	GaP/GaP	568	GREEN	TINTED	30	2.1	2.8	40	20	3GT-F
ELM2XXX3PGC	GaP/GaP	555	PURE GREEN	WATER CLEAR	30	2.2	2.8	10	20	3PGC-F
ELM2XXX3PGD	GaP/GaP	555	PURE GREEN	DIFFUSED	30	2.2	2.8	5	35	3PGD-F
ELM2XXX3PGT	GaP/GaP	555	PURE GREEN	TINTED	30	2.2	2.8	10	20	3PGT-F
ELM2XXX3YC	GaAsP/GaP	590	YELLOW	WATER CLEAR	30	2	2.8	40	20	3YC-F
ELM2XXX3YD	GaAsP/GaP	590	YELLOW	DIFFUSED	30	2	2.8	20	35	3YD-F
ELM2XXX3YT	GaAsP/GaP	590	YELLOW	TINTED	30	2	2.8	40	20	3YT-F
ELM2XXX3AC	GaAsP/GaP	605	AMBER	WATER CLEAR	30	2	2.8	40	20	3AC-F
ELM2XXX3AD	GaAsP/GaP	605	AMBER	DIFFUSED	30	2	2.8	25	35	3AD-F
ELM2XXX3AT	GaAsP/GaP	605	AMBER	TINTED	30	2	2.8	40	20	3AT-F
ELM2XXX3HC	GaAsP/GaP	625	HE RED	WATER CLEAR	30	2	2.8	50	20	3HC-F
ELM2XXX3HD	GaAsP/GaP	625	HE RED	DIFFUSED	30	2	2.8	30	35	3HD-F
ELM2XXX3HT	GaAsP/GaP	625	HE RED	TINTED	30	2	2.8	50	20	3HT-F
ELM2XXX3RC	GaP/GaP	700	RED	WATER CLEAR	20	2.1	2.8	2.5	35	3RC-F
ELM2XXX3RD	GaP/GaP	700	RED	DIFFUSED	20	2.1	2.8	2	20	3RD-F
ELM2XXX3RT	GaP/GaP	700	RED	TINTED	20	2.1	2.8	2.5	20	3RT-F
ELM2XXX3BC-A/G	GaAsP/GaP	605	AMBER	DIFFUSED	30	2.0	2.8	6	45	3BC-A/G-F
	GaP/GaP	568	GREEN		30	2.1	2.8	6		
ELM2XXX3BC	GaAsP/GaP	625	RED	DIFFUSED	30	2.0	2.8	6	45	3BC-F
	GaP/GaP	568	GREEN		30	2.1	2.8	6		
ELM2XXX3BC-R/Y	GaAsP/GaP	625	RED	DIFFUSED	30	2.0	2.8	6	45	3BC-R/Y-F
	GaAsP/GaP	590	YELLOW		30	2.0	2.8	4		
ELM2XXX3BC-Y/G	GaAsP/GaP	590	YELLOW	DIFFUSED	30	2.0	2.8	4	45	3BC-Y/G-F
	GaP/GaP	568	GREEN		30	2.1	2.8	6		

STANDARD TOLERANCE
(UNLESS OTHERWISE SPECIFIED)
±10% ALL VALUES ANGULAR
X° ± 5°

BIVAR®
4 THOMAS, IRVINE, CA. 92618
TEL: (949) 951-8808 FAX: (949) 951-3974

TITLE: EXTRUDED VERTICAL T-1 (3mm) LED STANDARD PROFILE SPACER ASSY

DESIGNED:	DATE:	PART NO:	REVISION:
Minh Doan	07/27/12	ELM2XXX3XX	J
CHECKED: T. Yin	DATE: 07/27/12	CAGE CODE : 32559	SHEET # 2 OF 5

CAD GENERATED DOCUMENT, DO NOT MEASURE DRAWING.

REV.	DESCRIPTION	DATE	APPROVED
	SEE SHEET#1.		

LED Assy. No.	Chip			Lens Appearance	Electro-Optical Data @ 20mA				Viewing Angle 2 θ ½ (Deg)	LED P/N
	Material	Peak Wave Length	Emitted Color		If (mA)	Vf (V)		Iv (mcd)		
					MAX	TYP	MAX	TYP		
ELM2XXX3UBWC	GaN/SiC	470	BLUE	WATER CLEAR	30	4	4.5	400	30	3UBWC-0.6K-F
ELM2XXX3SGC	GaP/GaP	568	GREEN	WATER CLEAR	30	2.1	2.8	50	20	3SGC-F
ELM2XXX3SGD	GaP/GaP	568	GREEN	DIFFUSED	30	2.1	2.8	30	35	3SGD-F
ELM2XXX3SGT	GaP/GaP	568	GREEN	TINTED	30	2.1	2.8	50	20	3SGT-F
ELM2XXX3SYC	GaAsP/GaP	590	YELLOW	WATER CLEAR	30	2.0	2.8	50	20	3SYC-F
ELM2XXX3SYD	GaAsP/GaP	590	YELLOW	DIFFUSED	30	2.0	2.8	30	35	3SYD-F
ELM2XXX3SYT	GaAsP/GaP	590	YELLOW	TINTED	30	2.0	2.8	50	20	3SYT-F
ELM2XXX3SAC	AlGaInP	605	AMBER	WATER CLEAR	30	1.8	2.4	300	20	3SAC-F
ELM2XXX3SAD	AlGaInP	605	AMBER	DIFFUSED	30	1.8	2.4	100	35	3SAD-F
ELM2XXX3SAT	AlGaInP	605	AMBER	TINTED	30	1.8	2.4	300	20	3SAT-F
ELM2XXX3SRC	GaAlAs/GaAs	645	SUPER RED	WATER CLEAR	30	1.7	2.4	60	20	3SRC-F
ELM2XXX3SRD	GaAlAs/GaAs	645	SUPER RED	DIFFUSED	30	1.7	2.4	40	35	3SRD-F
ELM2XXX3SRT	GaAlAs/GaAs	645	SUPER RED	TINTED	30	1.7	2.4	60	20	3SRT-F
ELM2XXX3UGC	AlGaInP	570	GREEN	WATER CLEAR	30	2.1	2.4	200	20	3UGC-F
ELM2XXX3SUGC	AlGaInP	570	GREEN	WATER CLEAR	30	2.1	2.4	300	35	3SUGC-F
ELM2XXX3UYC	AlGaInP	590	YELLOW	WATER CLEAR	30	2.0	2.4	300	20	3UYC-F
ELM2XXX3SUYC	AlGaInP	590	YELLOW	WATER CLEAR	30	2.0	2.4	400	20	3SUYC-F
ELM2XXX3UUYC	AlGaInP	590	YELLOW	WATER CLEAR	30	2.0	2.4	600	35	3UUYC-F
ELM2XXX3UOC	AlGaInP	625	ORANGE	WATER CLEAR	30	1.8	2.4	300	20	3UOC-F
ELM2XXX3SUOC	AlGaInP	625	ORANGE	WATER CLEAR	30	1.8	2.4	400	20	3SUOC-F
ELM2XXX3URC	GaAlAs/GaAs	645	RED	WATER CLEAR	30	1.7	2.4	200	35	3URC-F
ELM2XXX3SURC	AlGaInP	640	RED	WATER CLEAR	30	1.8	2.4	200	20	3SURC-F
ELM2XXX3UWC	InGaN/Sappire	6500K	WHITE	WATER CLEAR	30	3.4	3.8	1000	35	3UWC1.035C-F

STANDARD TOLERANCE
(UNLESS OTHERWISE SPECIFIED)
±10% ALL VALUES ANGULAR
X° ± 5°

BIVAR®
4 THOMAS, IRVINE, CA. 92618
TEL: (949) 951-8808 FAX: (949) 951-3974

TITLE: EXTRUDED VERTICAL T-1 (3mm) LED STANDARD PROFILE SPACER ASSY

DESIGNED:	DATE:	PART NO:	REVISION:
Minh Doan	07/27/12	ELM2XXX3XX	J
CHECKED: T. Yln	DATE: 07/27/12	CAGE CODE : 32559	SHEET # 3 OF 5

CAD GENERATED DOCUMENT, DO NOT MEASURE DRAWING.

REV.	DESCRIPTION	DATE	APPROVED
	SEE SHEET#1.		

LED Assy. No.	Chip			Lens Appearance	Absolute Max. Ratings			Electro-Optical Data @ 2mA			Viewing Angle 2 Θ ½ (Deg)	LED P/N
	Material	Peak Wave Length λp(nm)	Emitted Color		Pd (mW)	If (mA)	Peak If(mA)	Vf (V) TYP	Vf (V) MAX	Iv (mcd) TYP		
ELM2XXX3BWDL	GaN/siC	430	BLUE	DIFFUSED	20	7	-	3.8	4.2	2.5	35	3BWDL-F
ELM2XXX3GDL	GaP/GaP	568	GREEN	DIFFUSED	10	7	-	2.1	2.6	4.0	35	3GDL-F
ELM2XXX3PGDL	GaP/GaP	555	PURE GREEN	DIFFUSED	10	7	-	2.1	2.6	0.2	35	3PGDL-F
ELM2XXX3YDL	GaAsP/GaP	590	YELLOW	DIFFUSED	10	7	-	2.0	2.6	2.0	35	3YDL-F
ELM2XXX3ADL	GaAsP/GaP	605	AMBER	DIFFUSED	10	7	-	2.0	2.6	4.0	35	3ADL-F
ELM2XXX3HDL	GaAsP/GaP	625	HE RED	DIFFUSED	10	7	-	2.0	2.6	2.5	35	3HDL-F
ELM2XXX3RDL	GaP/GaP	700	RED	DIFFUSED	10	7	-	2.1	2.6	0.5	35	3RDL-F
ELM2XXX3SRDL	GaAlAs/GaAs	645	RED	DIFFUSED	10	7	-	2.0	-	8.0	35	3SRDL-F

Assembly P/N	Peak Wave Length λp(nm)	Emitted Color	Lens Appearance	Electro-Optical Data				Viewing Angle 2 θ½ (Deg)	LED P/N
				If (mA) MAX	Vf (V) TYP	Vf (V) MAX	Iv (mcd) TYP		
5 Volt				**Data @ 5V**					
ELM2XXX3BWD5V	BLUE	430	DIFFUSED	-	-	5	10	35	3BWD5V-F
ELM2XXX3GC5V	GREEN	568	WATER CLEAR	-	-	5	40	20	3GC5V-F
ELM2XXX3GD5V	GREEN	568	DIFFUSED	-	-	5	25	35	3GD5V-F
ELM2XXX3GT5V	GREEN	568	TINTED	-	-	5	40	20	3GT5V-F
ELM2XXX3AD5V	AMBER	605	DIFFUSED	-	-	5	25	35	3AD5V-F
ELM2XXX3HD5V	HE RED	625	DIFFUSED	-	-	5	30	35	3HD5V-F
ELM2XXX3RD5V	RED	700	DIFFUSED	-	-	5	2	35	3RD5V-F
ELM2XXX3YD5V	YELLOW	590	DIFFUSED	-	-	5	20	35	3YD5V-F
12 Volt				**Data @ 12V**					
ELM2XXX3GC12V	GREEN	568	WATER CLEAR	-	-	12	40	20	3GC12V-F
ELM2XXX3GD12V	GREEN	568	DIFFUSED	-	-	12	25	35	3GD12V-F
ELM2XXX3HC12V	HE RED	625	WATER CLEAR	-	-	12	50	20	3HC12V-F
ELM2XXX3HD12V	HE RED	625	DIFFUSED	-	-	12	30	35	3HD12V-F
ELM2XXX3RC12V	RED	700	WATER CLEAR	-	-	12	6	20	3RC12V-F
ELM2XXX3RD12V	RED	700	DIFFUSED	-	-	12	2	35	3RD12V-F
ELM2XXX3YC12V	YELLOW	590	WATER CLEAR	-	-	12	40	20	3YC12V-F
ELM2XXX3YD12V	YELLOW	590	DIFFUSED	-	-	12	25	35	3YD12V-F

STANDARD TOLERANCE
(UNLESS OTHERWISE SPECIFIED)
±10% ALL VALUES ANGULAR
X° ± 5°

BIVAR®
4 THOMAS, IRVINE, CA. 92618
TEL: (949) 951-8808 FAX: (949) 951-3974

TITLE: EXTRUDED VERTICAL T-1 (3mm) LED STANDARD PROFILE SPACER ASSY

DESIGNED:	DATE:	PART NO:	REVISION:
Minh Doan	07/27/12	ELM2XXX3XX	J
CHECKED: T. Yin	DATE: 07/27/12	CAGE CODE : 32559	SHEET # 4 OF 5

CAD GENERATED DOCUMENT, DO NOT MEASURE DRAWING.

REV.	DESCRIPTION	DATE	APPROVED
	SEE SHEET #1		

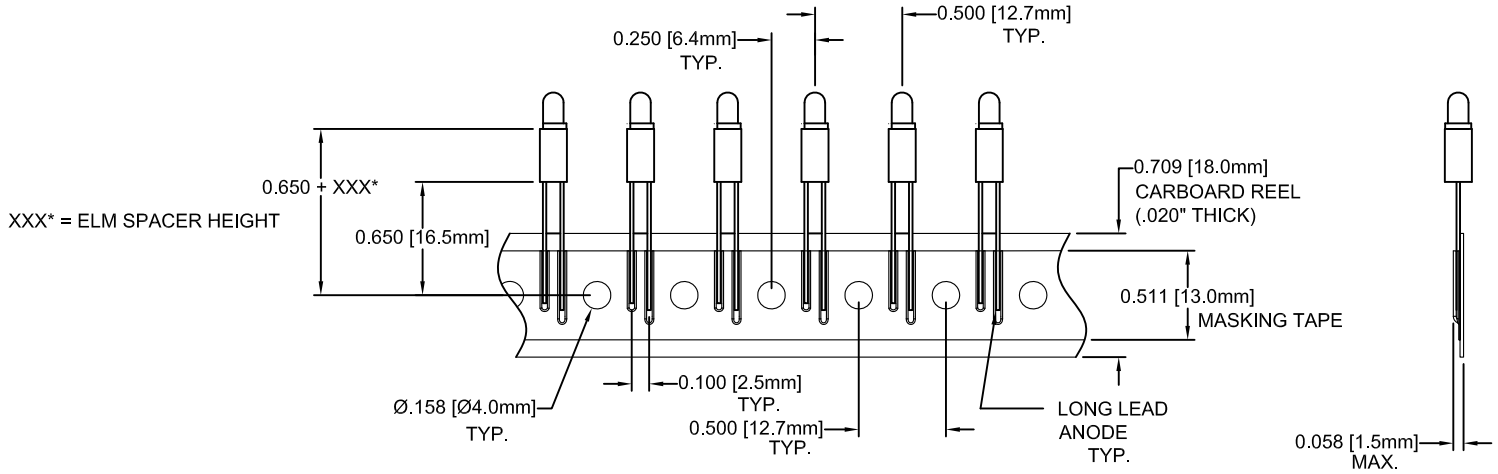

DIRECTION OF FEED →

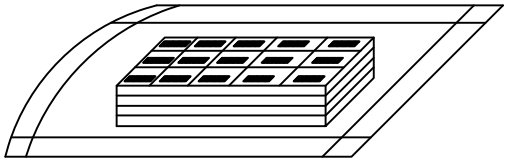

STANDARD PACKAGING TRAY

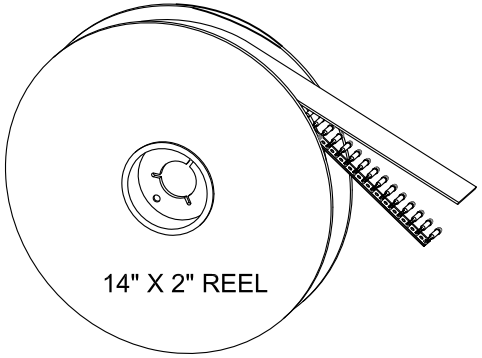

TAPE & REEL
1,000 pcs / reel

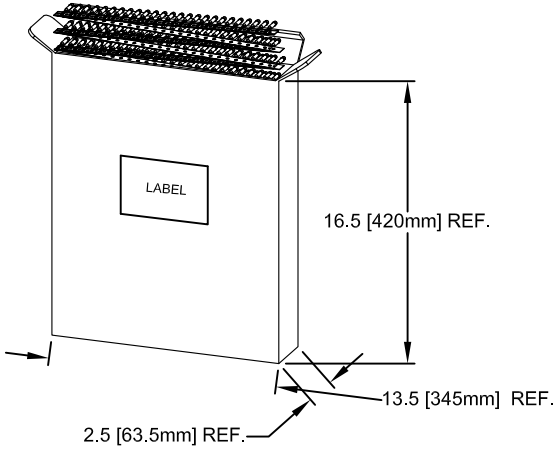

AMMO PACK
2,000 pcs / box

NOTE:
1. STANDARD PART NUMBERS ARE PACKAGED IN LOOSE PIECES USING PACKAGING TRAYS
2. ADD "T" SUFFIX TO PART NUMBER FOR TAPE AND REEL PACKAGING OPTION (1,000 PCS/REEL)
3. ADD "A" SUFFIX TO PART NUMBER FOR AMMO PACK OPTION (2,000 PCS/BOX)
4. TAPE AND REEL PACKAGING COMPLY TO EIA-468-C

STANDARD TOLERANCE
(UNLESS OTHERWISE SPECIFIED)

DECIMALS		ANGULAR	
.X	± .1	X°	± 1°
.XX	± .02		
.XXX	± .010		

BIVAR®
4 THOMAS, IRVINE, CA. 92618
TEL: (949) 951-8808 FAX: (949) 951-3974

TITLE: EXTRUDED VERTICAL T1 (3mm) LED STANDARD PROFILE SPACER ASSY

DESIGNED:	DATE:	PART NO:	REVISION:
David Green	03/05/04	ELM2XXX3XX	J
CHECKED: M. Chen	DATE: 03/05/04	CAGE CODE : 32559	SHEET # 5 OF 5

CAD GENERATED DOCUMENT, DO NOT MEASURE DRAWING.

Компания «ЭлектроПласт» предлагает заключение долгосрочных отношений при поставках импортных электронных компонентов на взаимовыгодных условиях!

Наши преимущества:

- Оперативные поставки широкого спектра электронных компонентов отечественного и импортного производства напрямую от производителей и с крупнейших мировых складов;
- Поставка более 17-ти миллионов наименований электронных компонентов;
- Поставка сложных, дефицитных, либо снятых с производства позиций;
- Оперативные сроки поставки под заказ (от 5 рабочих дней);
- Экспресс доставка в любую точку России;
- Техническая поддержка проекта, помощь в подборе аналогов, поставка прототипов;
- Система менеджмента качества сертифицирована по Международному стандарту ISO 9001;
- Лицензия ФСБ на осуществление работ с использованием сведений, составляющих государственную тайну;
- Поставка специализированных компонентов (Xilinx, Altera, Analog Devices, Intersil, Interpoint, Microsemi, Aeroflex, Peregrine, Syfer, Eurofarad, Texas Instrument, Miteq, Cobham, E2V, MA-COM, Hittite, Mini-Circuits,General Dynamics и др.);

Помимо этого, одним из направлений компании «ЭлектроПласт» является направление «Источники питания». Мы предлагаем Вам помощь Конструкторского отдела:

- Подбор оптимального решения, техническое обоснование при выборе компонента;
- Подбор аналогов;
- Консультации по применению компонента;
- Поставка образцов и прототипов;
- Техническая поддержка проекта;
- Защита от снятия компонента с производства.

Как с нами связаться

Телефон: 8 (812) 309 58 32 (многоканальный)
Факс: 8 (812) 320-02-42
Электронная почта: org@eplast1.ru
Адрес: 198099, г. Санкт-Петербург, ул. Калинина, дом 2, корпус 4, литера А.