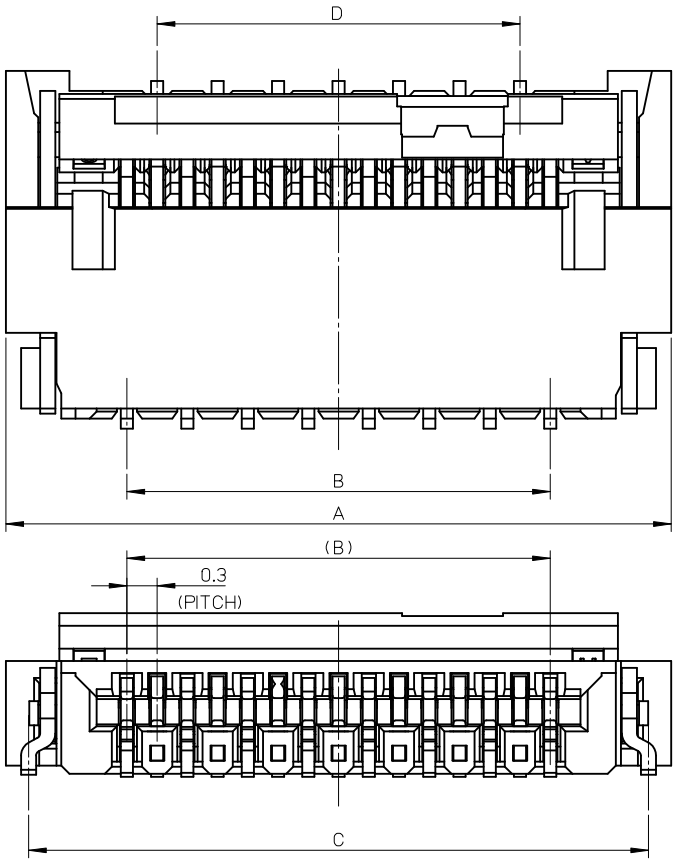

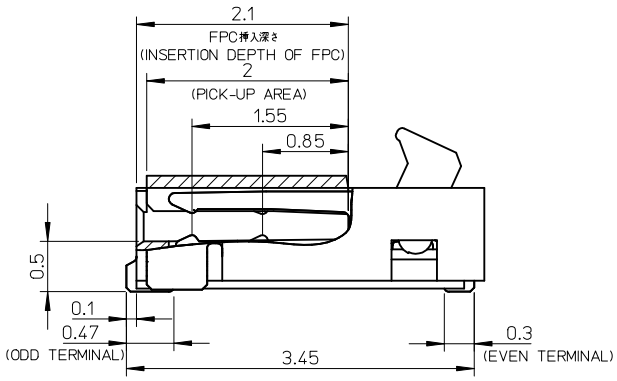

断面図

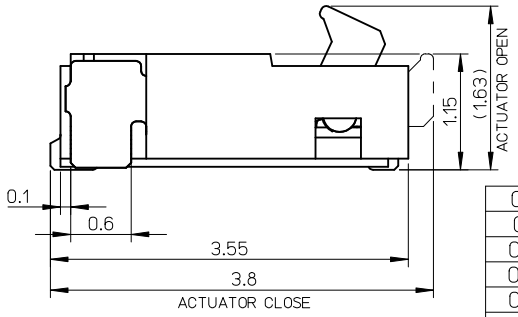

注記 NOTES:

1.材質 MATERIAL
ハウジング：LCP(液晶ポリマー)、白色、ガラス充填、UL94V-0
HOUSING:LIQUID CRYSTAL POLYMER,WHITE(NATURAL)
GLASS FILLED,UL94V-0
アクチュエータ：ポリアミド樹脂
黒色、ガラス充填、UL94V-HB
ACTUATOR: POLYAMIDE
BLACK GLASS FILLED,UL94V-HB
ターミナル：銅合金(t=0.12)
TERMINAL:COPPER ALLOY(t=0.12)
金具：燐青銅(t=0.15)
NAIL:PHOSPHOR BRONZE(t=0.15)

2.めっき仕様 PLATING
ターミナル TERMINAL
接点部：金めっき 0.1μm以上
CONTACT AREA: GOLD 0.1 MICROMETER MINIMUM
半田付け部：金めっき
SOLDER TAIL AREA: GOLD
下地めっき:ニッケル 1.0μm以上
UNDER PLATING:NICKEL 1.0 MICROMETER MINIMUM
金具 NAIL
錫めっき 1.0μm以上
TIN PLATING 1.0 MICROMETER MINIMUM
下地めっき:ニッケル 1.0μm以上
UNDER PLATING:NICKEL 1.0 MICROMETER MINIMUM

3.平坦度は、0.1ミリ以下とする。
TAILS COPLANARITY TO BE 0.1 MAXIMUM.

4.製品の取り扱いについては、コネクタ取り扱い説明書(AS-502598-001)を参照願います。
PLEASE REFER TO INSTRUCTION MANUAL(AS-502598-001) FOR 0.3 FPC CONNECOR BACK FLIP.

5.ELV及びRoHS適合品
ELV AND RoHS COMPLIANT

0.125	14.4	16.95	15	17.4	502598-5191	51
0.112	12.6	15.15	13.2	15.6	502598-4591	45
0.098	10.8	13.35	11.4	13.8	502598-3991	39
0.085	9	11.55	9.6	12	502598-3391	33
0.077	7.8	10.35	8.4	10.8	502598-2991	29
0.072	7.2	9.75	7.8	10.2	502598-2791	27
0.068	6.6	9.15	7.2	9.6	502598-2591	25
0.063	6	8.55	6.6	9	502598-2391	23
重さ (g) WEIGHT(g)	D	C	B	A	EMBOSSED PACKAGE オーダー番号 ORDER NO.	極 数 CIRCUITS

CONNECTOR SERIES NO. 502598-**11

REVISED
EC NO: J2012-0121
DRWN:YUHASEGAWA 2011/07/25
CH'KD:KTAKAHASHI 2011/07/25
APPR:KMORIKAWA 2011/07/28
DESCRIPTION
REV C

GENERAL TOLERANCES (UNLESS SPECIFIED)

10 UNDER	±0.2
10 OVER 30 UNDER	±0.25
30 OVER	±0.3
ANGULAR ±1 °	

DRAFT WHERE APPLICABLE MUST REMAIN WITHIN DIMENSIONS

DIMENSION STYLE: MM ONLY
SCALE: 20:1
DESIGN UNITS: METRIC
THIRD ANGLE PROJECTION

DRAWN BY: HONO DATE: 2009/07/21
CHECKED BY: HSHIMOYAMA DATE: 2009/07/21
APPROVED BY: KMORIKAWA DATE: 2009/07/21

TITLE: 0.3 FPC CONN. BACK FLIP HOUSING ASSY

molex MOLEX INCORPORATED

MATERIAL NO.: SEE TABLE
DOCUMENT NO.: SD-502598-001
SHEET NO.: 1 OF 2
SIZE: A3

THIS DRAWING CONTAINS INFORMATION THAT IS PROPRIETARY TO MOLEX INCORPORATED AND SHOULD NOT BE USED WITHOUT WRITTEN PERMISSION

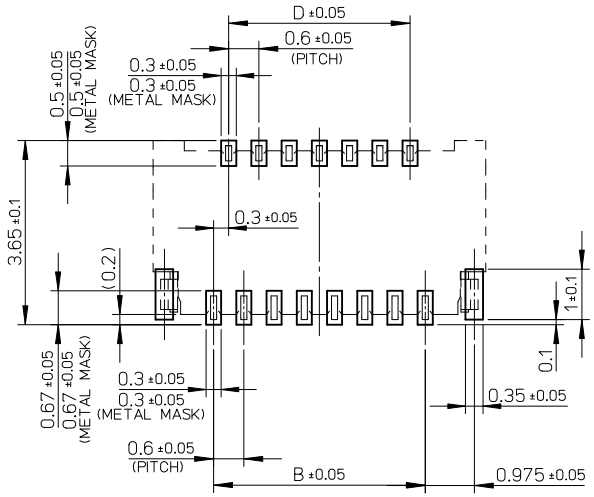

推奨基板寸法

RECOMMENDED P.W.B. PATTERN LAYOUT

推奨メタルマスク厚：t=0.1mm

RECOMMENDED METAL MASK THICKNESS:t=0.1mm

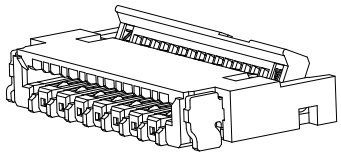

ISO VIEW（参考）

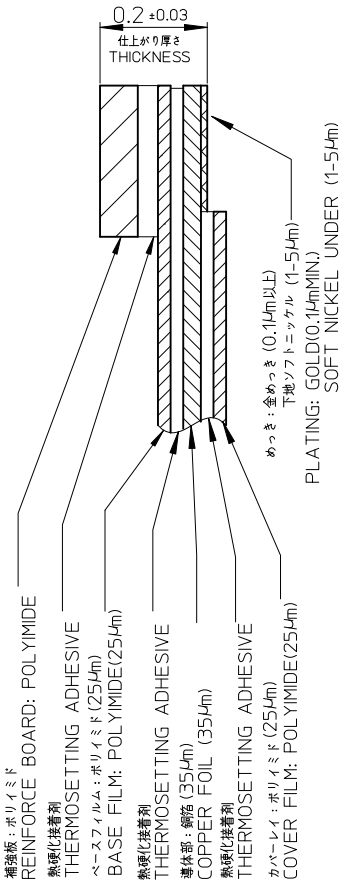

FPC構成推奨仕様

STRUCTURE OF FPC

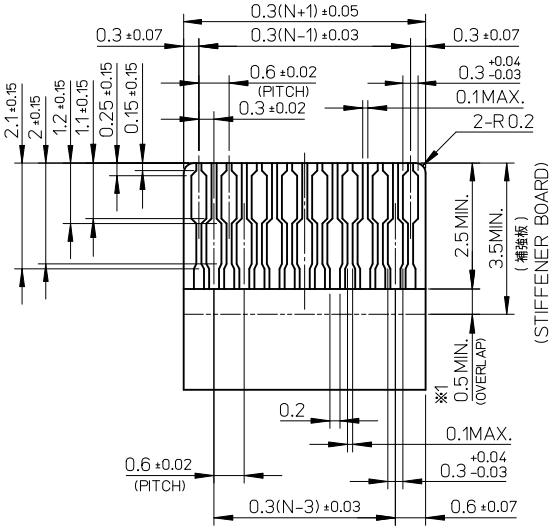

N：極数
N:CIRCUITS

適合する金めっきFPC推奨寸法

APPLICABLE FPC OF GOLD PATING RECOMMENDED DIMENSION

（仕上がり厚さ：0.2±0.03）

(THICKNESS:0.2±0.03)

FPCについて：

抜き方向は、導体側から補強板側を推奨致します。
補強フィルム材質は、ポリイミドを推奨致します。
接着剤は熱硬化接着剤を推奨致します。
尚、接着剤の接点部への付着は導通不良の原因になりますので、
染み出しが無い様、お願い致します。

ABOUT FPC:

RECOMMENDED PUNCHER DIRECTION:
FROM CONDUCTOR SIDE TO STIFFNER FILM SIDE.
RECOMMENDED MATERIAL:
STIFFENER FILM : POLYIMIDE
BONDING AGENT : THERMOSETTING AGENT
PLEASE PUT APPROPRIATE AMOUNT OF ADHESIVE ON ADHEREND BECAUSE THERE IS A POSSIBILITY THAT THE EXTRA ADHESIVE CAUSES THE DEFECT IN ELECTRICAL CONTINUITY.

※1 補強板の長さが図面通りに確保できない場合は、カバーレイと補強板のオーバーラップ寸法を0.5mm以上としてください。
WHEN STIFFNER BOARD DIMENSION CAN NOT SECURE AS DRAWING, PLEASE GIVE THE OVERLAP SIZE OF COVER FILM AND STIFFNER BOARD AS 0.5mm MINIMUM.

REVISED
EC NO: J2012-0121
DRWN:YUHASEGAWA 2011/07/25
CH'KD:KTAKAHASHI 2011/07/25
APPR:KMORIKAWA 2011/07/28
DESCRIPTION
REV C

GENERAL TOLERANCES (UNLESS SPECIFIED)

10 UNDER	±0.2
10 OVER 30 UNDER	±0.25
30 OVER	±0.3
ANGULAR ±1 °	

DRAFT WHERE APPLICABLE MUST REMAIN WITHIN DIMENSIONS

DIMENSION STYLE: MM ONLY	SCALE: -/-	DESIGN UNITS: METRIC	THIRD ANGLE PROJECTION
DRAWN BY: HONO	DATE: 2009/07/21	TITLE: 0.3 FPC CONN. BACK FLIP HOUSING ASSY	
CHECKED BY: HSHIMOYAMA	DATE: 2009/07/21		
APPROVED BY: KMORIKAWA	DATE: 2009/07/21	molex MOLEX INCORPORATED	
MATERIAL NO.: SEE TABLE		DOCUMENT NO.: SD-502598-001	SHEET NO.: 2 OF 2
SIZE: A3	THIS DRAWING CONTAINS INFORMATION THAT IS PROPRIETARY TO MOLEX INCORPORATED AND SHOULD NOT BE USED WITHOUT WRITTEN PERMISSION		

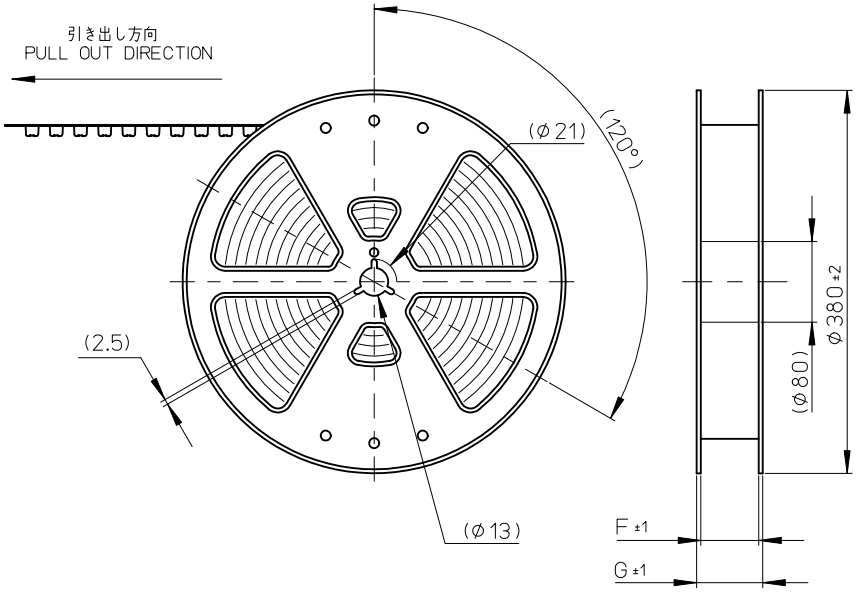

注記）
NOTES

1.製品番号502598-**11の詳細寸法は、製品単体図面を参照下さい。
IN THE PACAKGE PART NUMBER 502598-**11 DETAIL DIMENSIONS, SEE SALES DRAWING FOR CONNECTOR.

2.梱包数量：3000個/リール
NUMBER OF CONNECTORS : 3000 PCS/REEL

3.リードテープ長さ
LEAD TAPE LENGTH

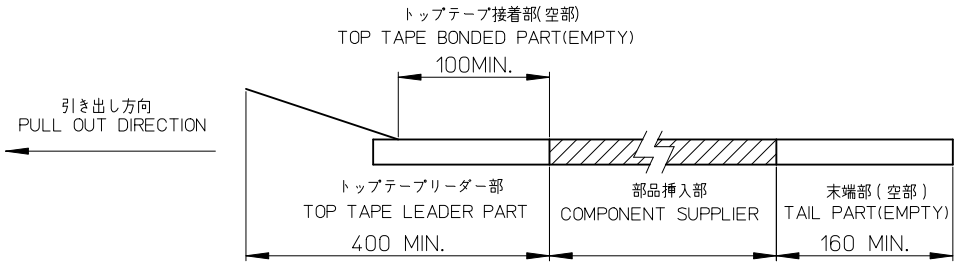

4.カバーテープの剥離強度については、IEC60286-3に準拠
COVER TAPE PEEL FORCE IS DEFINED BY IEC 60286-3.

5.材料
MATERIAL
キャリアテープ：ポリスチレン(PS)
CARRIER TAPE:POLYSTYRENE(PS)
トップテープ：ポリエチレンテレフタラート(PET)、他
TOP TAPE :POLYETHYLENE TELEPHTHALATE(PET), OTHERS
リール：ポリスチレン(PS)
REEL:POLYSTYLENE(PS)

6.ELV及びRoHS適合品
ELV AND RoHS COMPLIANT

REVISED			
EC NO: J2011-0028			
DRWN:HONO01	2009/07/21		
CH'KD:HSHIMOYAMA	2009/07/21		
APPR:KMORIKAWA	2010/07/08		
B		REV	DESCRIPTION

GENERAL TOLERANCES (UNLESS SPECIFIED)	
10 UNDER	± ---
10 OVER 30 UNDER	± ---
30 OVER	± ---
ANGULAR ±1 °	
DRAFT WHERE APPLICABLE MUST REMAIN WITHIN DIMENSIONS	

DIMENSION STYLE: MM ONLY	SCALE: ---	DESIGN UNITS: METRIC	THIRD ANGLE PROJECTION
DRAWN BY: HONO — DATE: 2009/07/21	TITLE: 0.3 FPC CONN. BACK FLIP TAPING PACKAGE (502598-**11 SERIES)		
CHECKED BY: HSHIMOYAMA — DATE: 2009/07/21			
APPROVED BY: KMORIKAWA — DATE: 2009/07/21	molex MOLEX INCORPORATED		
MATERIAL NO.: SEE TABLE	DOCUMENT NO.: SD-502598-002	SHEET NO.: 1 OF 2	
SIZE: A3	THIS DRAWING CONTAINS INFORMATION THAT IS PROPRIETARY TO MOLEX INCORPORATED AND SHOULD NOT BE USED WITHOUT WRITTEN PERMISSION		

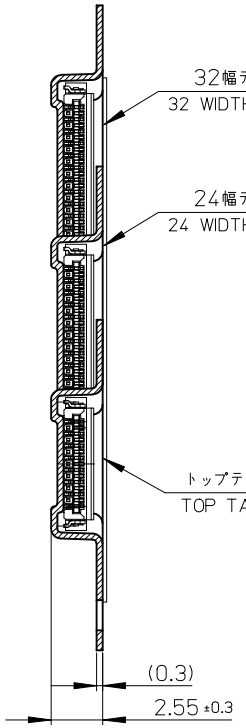

断面 Y-Y
SECTION Y-Y

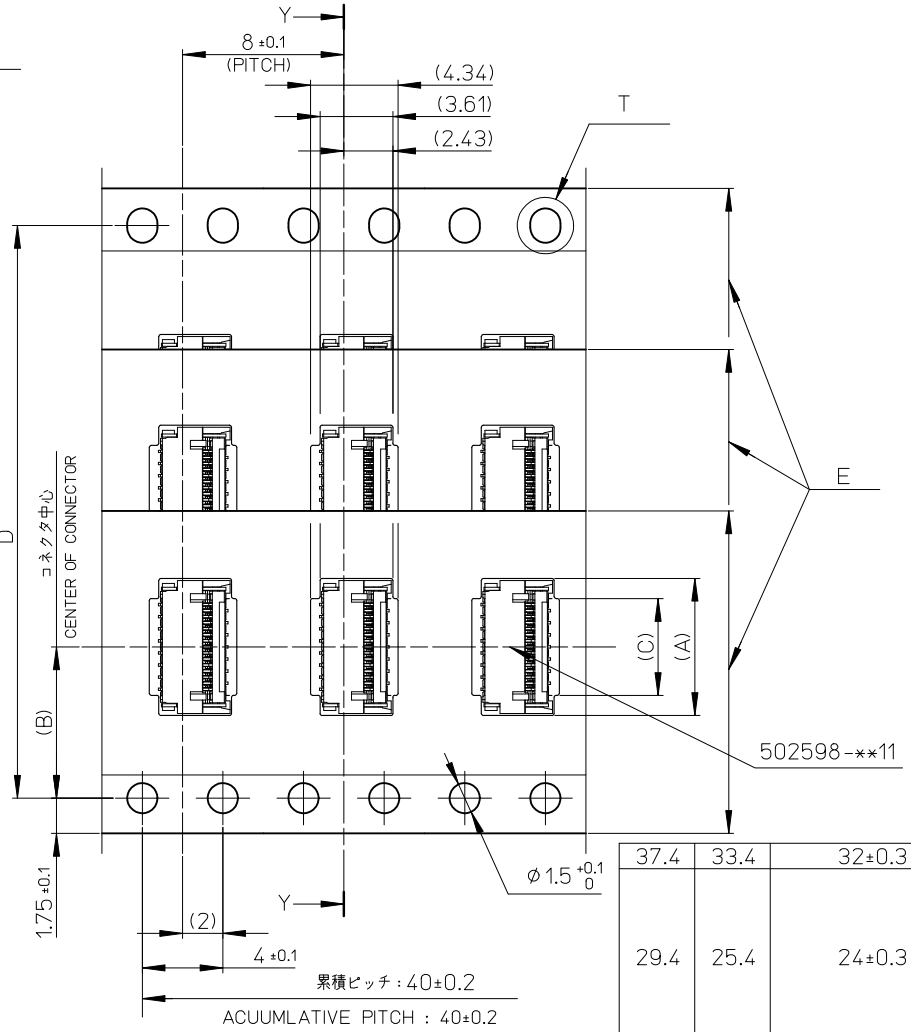

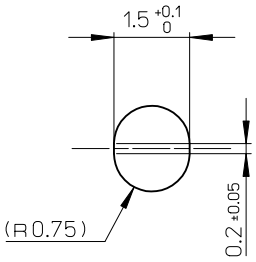

T部詳細
DETAIL T

G	F	E キャリアテープ幅 EMBOSSED TAPE WIDTH	D	C	B	A	製品番号 MATERIAL NO.	極数 CIRCUITS
37.4	33.4	32±0.3	28.4	15.7	14.2	17.6	502598-5191	51
29.4	25.4	24±0.3	〃	13.9	11.5	15.8	502598-4591	45
				12.1		14	502598-3991	39
				10.3		12.2	502598-3391	33
				9.1		11	502598-2991	29
				8.5		10.4	502598-2791	27
				7.9		9.8	502598-2591	25
				7.3		9.2	502598-2391	23

REVISED
EC NO: J2011-0028
DRWN:HONO01 2010/07/06
CH'KD:HSHIMOYAMA 2009/07/21
APPR:KMORIKAWA 2010/07/08
DESCRIPTION
REV B

GENERAL TOLERANCES (UNLESS SPECIFIED)

10 UNDER	± ---
10 OVER 30 UNDER	± ---
30 OVER	± ---
ANGULAR ±1 °	

DRAFT WHERE APPLICABLE MUST REMAIN WITHIN DIMENSIONS

DIMENSION STYLE: MM ONLY
SCALE: ---
DESIGN UNITS: METRIC
THIRD ANGLE PROJECTION

DRAWN BY: HONO DATE: 2009/07/21
CHECKED BY: HSHIMOYAMA DATE: 2009/07/21
APPROVED BY: KMORIKAWA DATE: 2009/07/21

TITLE: 0.3 FPC CONN. BACK FLIP TAPING PACKAGE (502598-**11 SERIES)

MOLEX INCORPORATED

MATERIAL NO.: SEE TABLE
DOCUMENT NO.: SD-502598-002
SHEET NO.: 2 OF 2
SIZE: A3

THIS DRAWING CONTAINS INFORMATION THAT IS PROPRIETARY TO MOLEX INCORPORATED AND SHOULD NOT BE USED WITHOUT WRITTEN PERMISSION

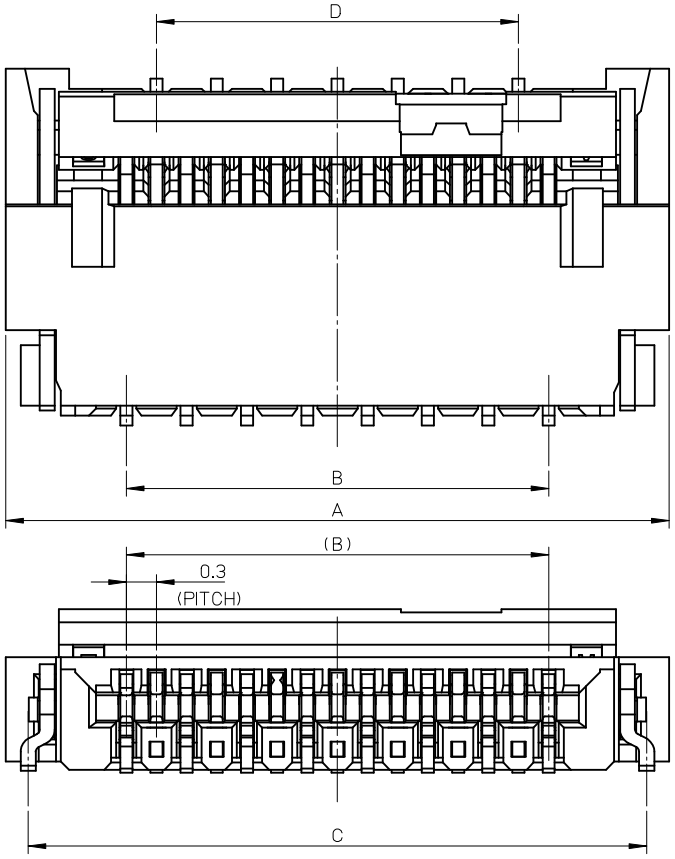

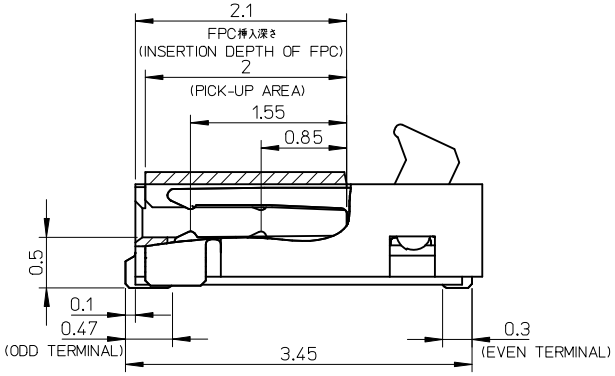

断面図

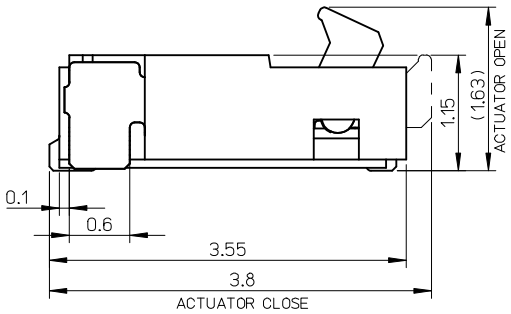

注記 NOTES:

1.材質 MATERIAL
ハウジング：LCP(液晶ポリマー)、白色、ガラス充填、UL94V-0
HOUSING:LIQUID CRYSTAL POLYMER,WHITE(NATURAL)
GLASS FILLED,UL94V-0
アクチュエータ：ポリアミド樹脂
黒色、ガラス充填、UL94HB
ACTUATOR: POLYAMIDE
BLACK GLASS FILLED,UL94HB
ターミナル：燐青銅(t=0.12)
TERMINAL:PHOSPHOR BRONZE(t=0.12)
金具：燐青銅(t=0.15)
NAIL:PHOSPHOR BRONZE(t=0.15)

2.めっき仕様 PLATING
ターミナル TERMINAL
接点部：金めっき 0.1μm以上
CONTACT AREA: GOLD 0.1 MICROMETER MINIMUM
半田付け部：金めっき
SOLDER TAIL AREA: GOLD
下地めっき:ニッケル 1.0μm以上
UNDER PLATING:NICKEL 1.0 MICROMETER MINIMUM
金具 NAIL
錫めっき 1.0μm以上
TIN PLATING 1.0 MICROMETER MINIMUM
下地めっき:ニッケル 1.0μm以上
UNDER PLATING:NICKEL 1.0 MICROMETER MINIMUM

3.平坦度は、0.1ミリ以下とする。
TAILS COPLANARITY TO BE 0.1 MAXIMUM.

4.ELV及びRoHS適合品
ELV AND RoHS COMPLIANT

5.本製品は502598-**91の端子材料変更品である。
THIS PRODUCT IS CHANGE OF TERMINAL MATERIAL
FOR 502598-**91.

重さ (g) WEIGHT(g)	D	C	B	A	EMBOSSED PACKAGE オーダー番号 ORDER NO.	極 数 CIRCUITS
0.125	14.4	16.95	15	17.4	502598-5193	51
0.112	12.6	15.15	13.2	15.6	502598-4593	45
0.105	11.4	13.95	12.0	14.4	502598-4193	41
0.098	10.8	13.35	11.4	13.8	502598-3993	39
0.085	9	11.55	9.6	12	502598-3393	33
0.077	7.8	10.35	8.4	10.8	502598-2993	29
0.072	7.2	9.75	7.8	10.2	502598-2793	27
0.068	6.6	9.15	7.2	9.6	502598-2593	25
0.063	6	8.55	6.6	9	502598-2393	23
0.048	4.2	6.75	4.8	7.2	502598-1793	17
0.043	3.6	6.15	4.2	6.6	502598-1593	15

CONNECTOR SERIES NO. 502598-**21

REV	DESCRIPTION	
B	REVISED	
	EC NO: J2014-0146	
	DRWN:KNAGUMO	2013/07/25
	CH'KD:KTAKAHASHI	2013/08/30
	APPR:YNOGAWA	2013/08/28

GENERAL TOLERANCES (UNLESS SPECIFIED)

10 UNDER	±0.2
10 OVER 30 UNDER	±0.25
30 OVER	±0.3
ANGULAR ±1 °	

DRAFT WHERE APPLICABLE MUST REMAIN WITHIN DIMENSIONS

DIMENSION STYLE: MM ONLY	SCALE: ---	DESIGN UNITS: METRIC	THIRD ANGLE PROJECTION
DRAWN BY: KMIYAHARA	DATE: 2012/07/18	TITLE: 0.3 FPC CONN. BACK FLIP HOUSING ASSY	
CHECKED BY: KTAKAHASHI	DATE: 2012/07/18		
APPROVED BY: KMORIKAWA	DATE: 2012/08/01	molex	
MATERIAL NO.: SEE TABLE	DOCUMENT NO.: SD-502598-003		SHEET NO.: 1 OF 2
SIZE: A3	THIS DRAWING CONTAINS INFORMATION THAT IS PROPRIETARY TO MOLEX INCORPORATED AND SHOULD NOT BE USED WITHOUT WRITTEN PERMISSION		

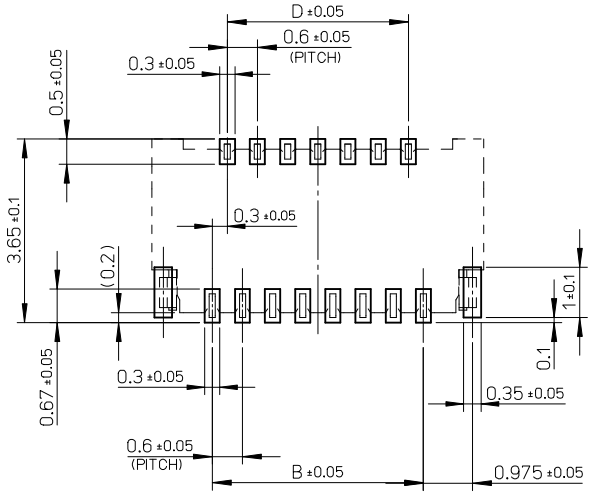

推奨基板寸法

RECOMMENDED P.W.B. PATTERN LAYOUT

マスク厚：100 μm
マスク開口率：100%
SCREEN THICKNESS：100 μm
SCREEN OPEN RATIO：100%

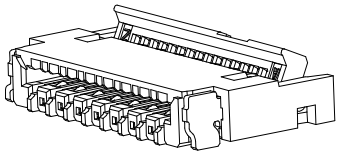

ISO VIEW （参考）

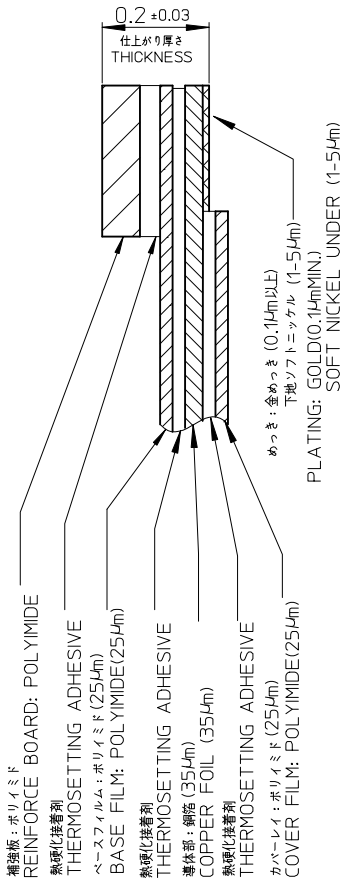

FPC構成推奨仕様

STRUCTURE OF FPC

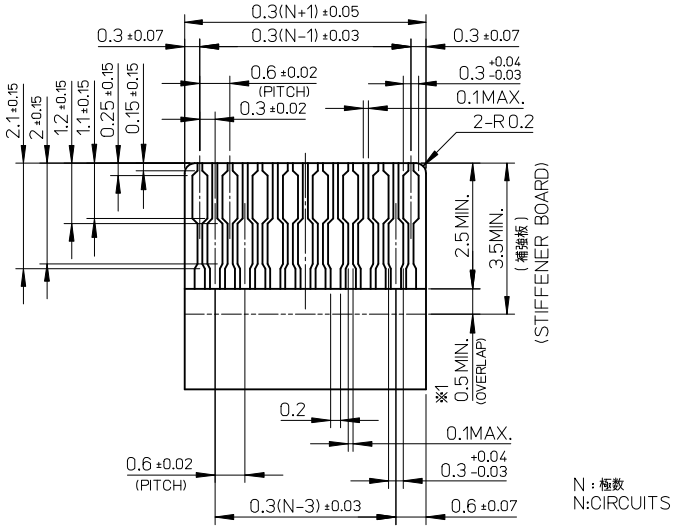

N：極数
N:CIRCUITS

適合する金めっきFPC推奨寸法
APPLICABLE FPC OF GOLD PATING
RECOMMENDED DIMENSION

（仕上がり厚さ：0.2±0.03）
(THICKNESS:0.2±0.03)

FPCについて：
抜き方向は、導体側から補強板側を推奨致します。
補強フィルム材質は、ポリイミドを推奨致します。
接着剤は熱硬化接着剤を推奨致します。
尚、接着剤の接点部への付着は導通不良の原因になりますので、
染み出しが無い様、お願い致します。

ABOUT FPC:
RECOMMENDED PUNCHER DIRECTION:
FROM CONDUCTOR SIDE TO STIFFNER FILM SIDE.
RECOMMENDED MATERIAL:
STIFFENER FILM : POLYIMIDE
BONDING AGENT : THERMOSETTING AGENT
PLEASE PUT APPROPRIATE AMOUNT OF ADHESIVE ON ADHEREND BECAUSE THERE IS A POSSIBILITY THAT THE EXTRA ADHESIVE CAUSES THE DEFECT IN ELECTRICAL CONTINUITY.

REVISED			
EC NO: J2014-0146			
DRWN:KNAGUMO	2013/07/25		
CHKD:KTAKAHASHI	2013/08/30		
APPR:YNOGAWA	2013/08/28		
B		REV	DESCRIPTION

GENERAL TOLERANCES (UNLESS SPECIFIED)

10 UNDER	±0.2
10 OVER 30 UNDER	±0.25
30 OVER	±0.3
ANGULAR ±1 °	

DRAFT WHERE APPLICABLE MUST REMAIN WITHIN DIMENSIONS

DIMENSION STYLE	SCALE	DESIGN UNITS	
MM ONLY	---	METRIC	THIRD ANGLE PROJECTION

DRAWN BY KMIYAHARA	DATE 2012/07/18	TITLE 0.3 FPC CONN. BACK FLIP HOUSING ASSY
CHECKED BY KTAKAHASHI	DATE 2012/07/18	
APPROVED BY KMORIKAWA	DATE 2012/08/01	molex
MATERIAL NO. SEE TABLE	DOCUMENT NO. SD-502598-003	SHEET NO. 2 OF 2

SIZE A3

THIS DRAWING CONTAINS INFORMATION THAT IS PROPRIETARY TO MOLEX INCORPORATED AND SHOULD NOT BE USED WITHOUT WRITTEN PERMISSION

Компания «ЭлектроПласт» предлагает заключение долгосрочных отношений при поставках импортных электронных компонентов на взаимовыгодных условиях!

Наши преимущества:

- Оперативные поставки широкого спектра электронных компонентов отечественного и импортного производства напрямую от производителей и с крупнейших мировых складов;
- Поставка более 17-ти миллионов наименований электронных компонентов;
- Поставка сложных, дефицитных, либо снятых с производства позиций;
- Оперативные сроки поставки под заказ (от 5 рабочих дней);
- Экспресс доставка в любую точку России;
- Техническая поддержка проекта, помощь в подборе аналогов, поставка прототипов;
- Система менеджмента качества сертифицирована по Международному стандарту ISO 9001;
- Лицензия ФСБ на осуществление работ с использованием сведений, составляющих государственную тайну;
- Поставка специализированных компонентов (Xilinx, Altera, Analog Devices, Intersil, Interpoint, Microsemi, Aeroflex, Peregrine, Syfer, Eurofarad, Texas Instrument, Miteq, Cobham, E2V, MA-COM, Hittite, Mini-Circuits,General Dynamics и др.);

Помимо этого, одним из направлений компании «ЭлектроПласт» является направление «Источники питания». Мы предлагаем Вам помощь Конструкторского отдела:

- Подбор оптимального решения, техническое обоснование при выборе компонента;
- Подбор аналогов;
- Консультации по применению компонента;
- Поставка образцов и прототипов;
- Техническая поддержка проекта;
- Защита от снятия компонента с производства.

Как с нами связаться

Телефон: 8 (812) 309 58 32 (многоканальный)
Факс: 8 (812) 320-02-42
Электронная почта: org@eplast1.ru
Адрес: 198099, г. Санкт-Петербург, ул. Калинина, дом 2, корпус 4, литера А.