nichicon

LGN

Snap-in Terminal Type, 105°C Smaller-Sized

Smaller

- Withstanding 3000 hours application of rated ripple current at 105°C.
- One rank smaller case sized than LGU.
- Addition of 600V rated voltage.
- Compliant to the RoHS directive (2011/65/EU,(EU)2015/863).

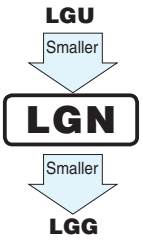

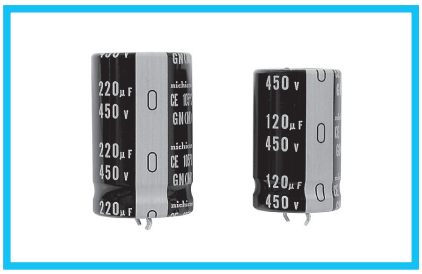

■Specifications

Item	Performance Characteristics
Category Temperature Range	– 40 to +105°C (160 to 250V) , – 25 to +105°C (350 to 600V)
Rated Voltage Range	160 to 600V
Rated Capacitance Range	56 to 3300μF
Capacitance Tolerance	±20% at 120Hz, 20°C
Leakage Current	$I \leq 3\sqrt{CV}$ (μA) (After 5 minutes' application of rated voltage at 20°C) [C : Rated Capacitance (μF) V : Voltage (V)]
Tangent of loss angle (tan δ)	Rated voltage (V): 160 to 420 / 450 to 600; tan δ (MAX.): 0.15 / 0.20. Measurement frequency : 120Hz at 20°C
Stability at Low Temperature	Rated voltage (V): 160 to 250 / 350 to 600; Impedance ratio ZT/Z20 (MAX.) Z – 25°C/Z+20°C: 4 / 8. Measurement frequency : 120Hz
Endurance	The specifications listed at right shall be met when the capacitors are restored to 20°C after D.C. bias plus rated ripple current is applied for 3000 hours at 105°C, the peak voltage shall not exceed the rated voltage. (2000 hours at 105°C for the parts rated at 600V) — Capacitance change: Within ±20% of the initial capacitance value; tan δ: 200% or less than the initial specified value; Leakage current: Less than or equal to the initial specified value
Shelf Life	After storing the capacitors under no load at 105°C for 1000hours and then performing voltage treatment based on JIS C 5101-4 clause 4.1 at 20°C, they shall meet the characteristic requirements listed at right. — Capacitance change: Within ±20% of the initial capacitance value; tan δ: 200% or less than the initial specified value; Leakage current: Less than or equal to the initial specified value
Marking	Printed with white color letter on black sleeve.

■Drawing

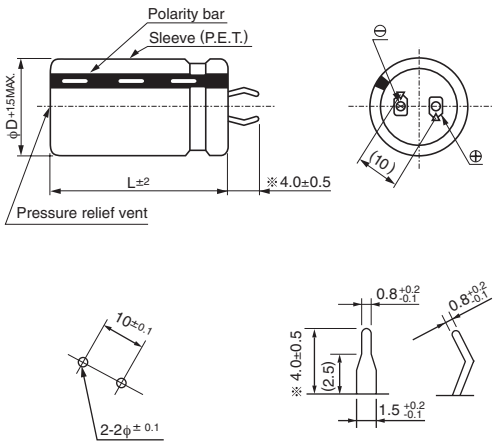

(PC board hole dimensions) (Terminal dimensions)

※ The other terminal is also available upon request.
Please refer page 346 for schematic of dimensions.

Type numbering system (Example : 400V 180μF)

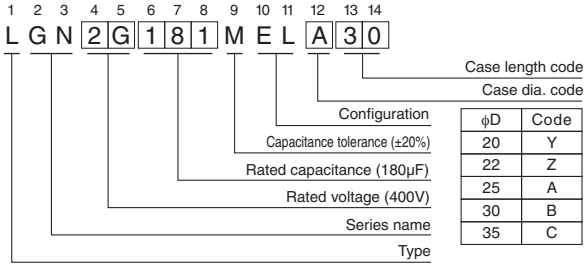

φD	Code
20	Y
22	Z
25	A
30	B
35	C

Minimum order quantity : 50pcs.

● Dimension table in next page.

LGN

■Dimensions

160V (2C)				
Cap.(μF)	Size φD×L(mm)	Rated ripple (mArms)	Leakage Current (mA)	Code
330	20 × 25	1170	0.68	LGN2C331MELY25
390	20 × 25	1280	0.74	LGN2C391MELY25
470	20 × 30	1400	0.82	LGN2C471MELY30
	22 × 25	1400	0.82	LGN2C471MELZ25
560	20 × 35	1500	0.89	LGN2C561MELY35
	22 × 30	1500	0.89	LGN2C561MELZ30
680	20 × 40	1700	0.98	LGN2C681MELY40
	22 × 35	1700	0.98	LGN2C681MELZ35
	25 × 25	1700	0.98	LGN2C681MELA25
820	22 × 35	2000	1.08	LGN2C821MELZ35
	25 × 30	2000	1.08	LGN2C821MELA30
	30 × 25	2000	1.08	LGN2C821MELB25
1000	22 × 45	2200	1.20	LGN2C102MELZ45
	25 × 35	2200	1.20	LGN2C102MELA35
	30 × 25	2200	1.20	LGN2C102MELB25
1200	25 × 40	2300	1.31	LGN2C122MELA40
	30 × 30	2300	1.31	LGN2C122MELB30
	35 × 25	2300	1.31	LGN2C122MELC25
1500	25 × 45	2500	1.46	LGN2C152MELA45
	30 × 35	2500	1.46	LGN2C152MELB35
	35 × 30	2500	1.46	LGN2C152MELC30
1800	30 × 40	2700	1.60	LGN2C182MELB40
	35 × 35	2700	1.60	LGN2C182MELC35
2200	30 × 45	2900	1.77	LGN2C222MELB45
	35 × 35	2900	1.77	LGN2C222MELC35
2700	35 × 45	3100	1.97	LGN2C272MELC45
3300	35 × 50	3300	2.17	LGN2C332MELC50

180V (2Z)				
Cap.(μF)	Size φD×L(mm)	Rated ripple (mArms)	Leakage Current (mA)	Code
330	20 × 25	1200	0.73	LGN2Z331MELY25
390	20 × 30	1280	0.79	LGN2Z391MELY30
	22 × 25	1280	0.79	LGN2Z391MELZ25
470	20 × 35	1380	0.87	LGN2Z471MELY35
	22 × 30	1380	0.87	LGN2Z471MELZ30
560	20 × 40	1500	0.95	LGN2Z561MELY40
	22 × 30	1500	0.95	LGN2Z561MELZ30
	25 × 25	1500	0.95	LGN2Z561MELA25
680	20 × 45	1700	1.04	LGN2Z681MELY45
	22 × 35	1700	1.04	LGN2Z681MELZ35
	25 × 30	1700	1.04	LGN2Z681MELA30
820	22 × 40	2000	1.15	LGN2Z821MELZ40
	25 × 35	2000	1.15	LGN2Z821MELA35
	30 × 25	2000	1.15	LGN2Z821MELB25
1000	25 × 40	2200	1.27	LGN2Z102MELA40
	30 × 30	2200	1.27	LGN2Z102MELB30
	35 × 25	2200	1.27	LGN2Z102MELC25
1200	25 × 45	2300	1.39	LGN2Z122MELA45
	30 × 35	2300	1.39	LGN2Z122MELB35
	35 × 30	2300	1.39	LGN2Z122MELC30
1500	25 × 50	2500	1.55	LGN2Z152MELA50
	30 × 40	2500	1.55	LGN2Z152MELB40
	35 × 30	2500	1.55	LGN2Z152MELC30
1800	30 × 45	2700	1.70	LGN2Z182MELB45
	35 × 35	2700	1.70	LGN2Z182MELC35
2200	30 × 50	2900	1.88	LGN2Z222MELB50
	35 × 40	2900	1.88	LGN2Z222MELC40
2700	35 × 50	3100	2.09	LGN2Z272MELC50

200V (2D)				
Cap.(μF)	Size φD×L(mm)	Rated ripple (mArms)	Leakage Current (mA)	Code
270	20 × 25	990	0.69	LGN2D271MELY25
330	20 × 30	1200	0.77	LGN2D331MELY30
	22 × 25	1200	0.77	LGN2D331MELZ25
390	20 × 30	1340	0.83	LGN2D391MELY30
	22 × 25	1310	0.83	LGN2D391MELZ25
470	20 × 35	1480	0.91	LGN2D471MELY35
	22 × 30	1480	0.91	LGN2D471MELZ30
	25 × 25	1480	0.91	LGN2D471MELA25
560	20 × 40	1600	1.00	LGN2D561MELY40
	22 × 35	1600	1.00	LGN2D561MELZ35
680	22 × 40	1750	1.10	LGN2D681MELZ40
	25 × 30	1750	1.10	LGN2D681MELA30
	30 × 25	1750	1.10	LGN2D681MELB25
820	22 × 45	2040	1.21	LGN2D821MELZ45
	25 × 35	2040	1.21	LGN2D821MELA35
1000	22 × 50	2300	1.34	LGN2D102MELZ50
	25 × 45	2300	1.34	LGN2D102MELA45
	30 × 30	2300	1.34	LGN2D102MELB30
	35 × 25	2300	1.34	LGN2D102MELC25
1200	25 × 50	2650	1.46	LGN2D122MELA50
	30 × 35	2650	1.46	LGN2D122MELB35
	35 × 30	2650	1.46	LGN2D122MELC30
1500	30 × 40	2800	1.64	LGN2D152MELB40
	35 × 35	2800	1.64	LGN2D152MELC35
1800	30 × 50	3080	1.80	LGN2D182MELB50
	35 × 40	3080	1.80	LGN2D182MELC40
2200	35 × 45	3480	1.98	LGN2D222MELC45

220V (2P)				
Cap.(μF)	Size φD×L(mm)	Rated ripple (mArms)	Leakage Current (mA)	Code
220	20 × 25	980	0.66	LGN2P221MELY25
270	20 × 30	1080	0.73	LGN2P271MELY30
	22 × 25	1080	0.73	LGN2P271MELZ25
330	20 × 35	1260	0.80	LGN2P331MELY35
	22 × 25	1260	0.80	LGN2P331MELZ25
390	20 × 35	1340	0.87	LGN2P391MELY35
	22 × 30	1340	0.87	LGN2P391MELZ30
	25 × 25	1340	0.87	LGN2P391MELA25
470	20 × 45	1480	0.96	LGN2P471MELY45
	22 × 35	1480	0.96	LGN2P471MELZ35
560	22 × 40	1610	1.05	LGN2P561MELZ40
	25 × 35	1610	1.05	LGN2P561MELA35
	30 × 25	1610	1.05	LGN2P561MELB25
680	22 × 45	1780	1.16	LGN2P681MELZ45
	25 × 35	1780	1.16	LGN2P681MELA35
	30 × 30	1780	1.16	LGN2P681MELB30
820	22 × 50	1930	1.27	LGN2P821MELZ50
	25 × 40	1930	1.27	LGN2P821MELA40
	30 × 35	1930	1.27	LGN2P821MELB35
	35 × 25	1930	1.27	LGN2P821MELC25
1000	25 × 50	2330	1.40	LGN2P102MELA50
	30 × 35	2330	1.40	LGN2P102MELB35
	35 × 30	2330	1.40	LGN2P102MELC30
1200	30 × 40	2500	1.54	LGN2P122MELB40
	35 × 35	2500	1.54	LGN2P122MELC35
1500	30 × 50	2760	1.72	LGN2P152MELB50
	35 × 40	2760	1.72	LGN2P152MELC40
1800	35 × 50	3110	1.88	LGN2P182MELC50

Rated ripple current (mArms) at 105°C 120Hz

LGN

■Dimensions

250V (2E)				
Cap.(μF)	Size φD×L(mm)	Rated ripple (mArms)	Leakage Current (mA)	Code
220	22 × 25	1000	0.70	LGN2E221MELZ25
270	22 × 25	1100	0.77	LGN2E271MELZ25
330	20 × 35	1200	0.86	LGN2E331MELY35
	22 × 30	1200	0.86	LGN2E331MELZ30
	25 × 25	1200	0.86	LGN2E331MELA25
390	20 × 40	1300	0.93	LGN2E391MELY40
	22 × 35	1300	0.93	LGN2E391MELZ35
	25 × 30	1300	0.93	LGN2E391MELA30
470	22 × 40	1400	1.02	LGN2E471MELZ40
	25 × 35	1400	1.02	LGN2E471MELA35
	30 × 25	1400	1.02	LGN2E471MELB25
560	22 × 45	1500	1.12	LGN2E561MELZ45
	25 × 35	1500	1.12	LGN2E561MELA35
	30 × 30	1500	1.12	LGN2E561MELB30
680	22 × 50	1700	1.23	LGN2E681MELZ50
	25 × 40	1700	1.23	LGN2E681MELA40
	30 × 30	1700	1.23	LGN2E681MELB30
	35 × 25	1700	1.23	LGN2E681MELC25
820	25 × 45	2000	1.35	LGN2E821MELA45
	30 × 35	2000	1.35	LGN2E821MELB35
	35 × 30	2000	1.35	LGN2E821MELC30
1000	30 × 40	2200	1.50	LGN2E102MELB40
	35 × 35	2200	1.50	LGN2E102MELC35
1200	30 × 45	2300	1.64	LGN2E122MELB45
	35 × 40	2300	1.64	LGN2E122MELC40
1500	35 × 45	2500	1.83	LGN2E152MELC45
1800	35 × 50	2700	2.01	LGN2E182MELC50

350V (2V)				
Cap.(μF)	Size φD×L(mm)	Rated ripple (mArms)	Leakage Current (mA)	Code
120	22 × 25	750	0.61	LGN2V121MELZ25
150	22 × 30	820	0.68	LGN2V151MELZ30
180	22 × 30	900	0.75	LGN2V181MELZ30
	25 × 25	900	0.75	LGN2V181MELA25
220	22 × 35	1000	0.83	LGN2V221MELZ35
	25 × 30	1000	0.83	LGN2V221MELA30
270	22 × 40	1100	0.92	LGN2V271MELZ40
	25 × 35	1100	0.92	LGN2V271MELA35
	30 × 25	1100	0.92	LGN2V271MELB25
330	22 × 45	1200	1.01	LGN2V331MELZ45
	25 × 40	1200	1.01	LGN2V331MELA40
	30 × 30	1200	1.01	LGN2V331MELB30
390	25 × 45	1300	1.10	LGN2V391MELA45
	30 × 35	1300	1.10	LGN2V391MELB35
470	25 × 50	1400	1.21	LGN2V471MELA50
	30 × 40	1400	1.21	LGN2V471MELB40
	35 × 30	1400	1.21	LGN2V471MELC30
560	30 × 45	1500	1.32	LGN2V561MELB45
	35 × 35	1500	1.32	LGN2V561MELC35
680	30 × 50	1700	1.46	LGN2V681MELB50
	35 × 40	1700	1.46	LGN2V681MELC40
820	35 × 45	1900	1.60	LGN2V821MELC45

400V (2G)				
Cap.(μF)	Size φD×L(mm)	Rated ripple (mArms)	Leakage Current (mA)	Code
68	20 × 25	490	0.49	LGN2G680MELY25
82	20 × 30	640	0.54	LGN2G820MELY30
100	20 × 30	680	0.60	LGN2G101MELY30
	22 × 25	680	0.60	LGN2G101MELZ25
120	20 × 35	730	0.65	LGN2G121MELY35
	22 × 30	730	0.65	LGN2G121MELZ30
150	20 × 40	850	0.73	LGN2G151MELY40
	22 × 35	850	0.73	LGN2G151MELZ35
180	22 × 35	950	0.80	LGN2G181MELZ35
	25 × 30	950	0.80	LGN2G181MELA30
	30 × 25	950	0.80	LGN2G181MELB25
220	22 × 45	1100	0.88	LGN2G221MELZ45
	25 × 35	1100	0.88	LGN2G221MELA35
	30 × 25	1100	0.88	LGN2G221MELB25
270	22 × 50	1220	0.98	LGN2G271MELZ50
	25 × 40	1220	0.98	LGN2G271MELA40
	30 × 30	1220	0.98	LGN2G271MELB30
	35 × 25	1220	0.98	LGN2G271MELC25
330	25 × 45	1440	1.08	LGN2G331MELA45
	30 × 35	1440	1.08	LGN2G331MELB35
390	25 × 50	1550	1.18	LGN2G391MELA50
	30 × 40	1550	1.18	LGN2G391MELB40
	35 × 30	1550	1.18	LGN2G391MELC30
470	30 × 45	1680	1.30	LGN2G471MELB45
	35 × 35	1680	1.30	LGN2G471MELC35
560	30 × 50	1900	1.41	LGN2G561MELB50
	35 × 40	1900	1.41	LGN2G561MELC40
680	35 × 45	2120	1.56	LGN2G681MELC45

420V (W6)				
Cap.(μF)	Size φD×L(mm)	Rated ripple (mArms)	Leakage Current (mA)	Code
68	20 × 25	500	0.50	LGNW6680MELY25
82	20 × 25	640	0.55	LGNW6820MELY25
100	20 × 30	660	0.61	LGNW6101MELY30
	22 × 25	660	0.61	LGNW6101MELZ25
120	20 × 35	810	0.67	LGNW6121MELY35
	22 × 30	810	0.67	LGNW6121MELZ30
	25 × 25	810	0.67	LGNW6121MELA25
150	20 × 40	840	0.75	LGNW6151MELY40
	22 × 35	840	0.75	LGNW6151MELZ35
	25 × 30	840	0.75	LGNW6151MELA30
180	20 × 45	910	0.82	LGNW6181MELY45
	22 × 40	910	0.82	LGNW6181MELZ40
	25 × 30	910	0.82	LGNW6181MELA30
	30 × 25	910	0.82	LGNW6181MELB25
220	22 × 45	1050	0.91	LGNW6221MELZ45
	25 × 35	1050	0.91	LGNW6221MELA35
	30 × 30	1050	0.91	LGNW6221MELB30
270	25 × 40	1250	1.01	LGNW6271MELA40
	30 × 30	1250	1.01	LGNW6271MELB30
	35 × 25	1250	1.01	LGNW6271MELC25
330	25 × 50	1420	1.11	LGNW6331MELA50
	30 × 35	1420	1.11	LGNW6331MELB35
	35 × 30	1420	1.11	LGNW6331MELC30
390	30 × 40	1610	1.21	LGNW6391MELB40
	35 × 35	1610	1.21	LGNW6391MELC35
470	30 × 45	1860	1.33	LGNW6471MELB45
	35 × 40	1860	1.33	LGNW6471MELC40
560	35 × 45	2100	1.45	LGNW6561MELC45
680	35 × 50	2200	1.60	LGNW6681MELC50

Rated ripple current (mArms) at 105°C 120Hz

LGN

■Dimensions

450V (2W)				
Cap.(μF)	Size φD×L(mm)	Rated ripple (mArms)	Leakage Current (mA)	Code
56	20 × 25	440	0.47	LGN2W560MELY25
68	20 × 25	500	0.52	LGN2W680MELY25
82	20 × 30	640	0.57	LGN2W820MELY30
	22 × 25	640	0.57	LGN2W820MELZ25
100	20 × 35	690	0.63	LGN2W101MELY35
	22 × 30	690	0.63	LGN2W101MELZ30
	25 × 25	690	0.63	LGN2W101MELA25
120	22 × 35	720	0.69	LGN2W121MELZ35
	25 × 30	720	0.69	LGN2W121MELA30
150	20 × 45	790	0.77	LGN2W151MELY45
	22 × 40	790	0.77	LGN2W151MELZ40
	25 × 30	790	0.77	LGN2W151MELA30
	30 × 25	790	0.77	LGN2W151MELB25
180	22 × 45	870	0.85	LGN2W181MELZ45
	25 × 35	870	0.85	LGN2W181MELA35
	30 × 30	870	0.85	LGN2W181MELB30
220	25 × 40	1050	0.94	LGN2W221MELA40
	30 × 30	1050	0.94	LGN2W221MELB30
	35 × 25	1050	0.94	LGN2W221MELC25
270	25 × 50	1230	1.04	LGN2W271MELA50
	30 × 35	1230	1.04	LGN2W271MELB35
	35 × 30	1230	1.04	LGN2W271MELC30
330	30 × 40	1380	1.15	LGN2W331MELB40
	35 × 35	1380	1.15	LGN2W331MELC35
390	30 × 50	1610	1.25	LGN2W391MELB50
	35 × 40	1610	1.25	LGN2W391MELC40
470	35 × 45	1780	1.37	LGN2W471MELC45
560	35 × 50	1990	1.50	LGN2W561MELC50

500V (2H)				
Cap.(μF)	Size φD×L(mm)	Rated ripple (mArms)	Leakage Current (mA)	Code
56	22 × 25	470	0.50	LGN2H560MELZ25
68	22 × 30	520	0.55	LGN2H680MELZ30
	25 × 25	520	0.55	LGN2H680MELA25
82	22 × 35	590	0.60	LGN2H820MELZ35
100	22 × 40	650	0.67	LGN2H101MELZ40
	25 × 30	650	0.67	LGN2H101MELA30
	30 × 25	650	0.67	LGN2H101MELB25
120	22 × 45	680	0.73	LGN2H121MELZ45
	25 × 35	680	0.73	LGN2H121MELA35
	30 × 30	680	0.73	LGN2H121MELB30
150	22 × 50	750	0.82	LGN2H151MELZ50
	25 × 45	750	0.82	LGN2H151MELA45
	35 × 25	750	0.82	LGN2H151MELC25
180	25 × 50	900	0.90	LGN2H181MELA50
	30 × 35	900	0.90	LGN2H181MELB35
	35 × 30	900	0.90	LGN2H181MELC30
220	30 × 45	1020	0.99	LGN2H221MELB45
	35 × 35	1020	0.99	LGN2H221MELC35
270	30 × 50	1120	1.10	LGN2H271MELB50
	35 × 40	1120	1.10	LGN2H271MELC40
330	35 × 45	1250	1.21	LGN2H331MELC45
390	35 × 50	1300	1.32	LGN2H391MELC50

■Dimensions

600V (2X)				
Cap.(μF)	Size φD×L(mm)	Rated ripple (mArms)	Leakage Current (mA)	Code
56	30 × 25	500	0.55	LGN2X560MELB25
68	30 × 30	560	0.61	LGN2X680MELB30
82	30 × 35	610	0.67	LGN2X820MELB35
	35 × 25	610	0.67	LGN2X820MELC25
100	30 × 40	670	0.73	LGN2X101MELB40
	35 × 30	670	0.73	LGN2X101MELC30
120	30 × 45	740	0.80	LGN2X121MELB45
	35 × 35	740	0.80	LGN2X121MELC35
150	30 × 50	830	0.90	LGN2X151MELB50
	35 × 40	830	0.90	LGN2X151MELC40
180	35 × 45	900	0.99	LGN2X181MELC45
220	35 × 50	1000	1.09	LGN2X221MELC50

Rated ripple current (mArms) at 105°C 120Hz

● Frequency coefficient of rated ripple current

Frequency (Hz)		50	60	120	300	1k	10k	50k or more
coeff.	160 to 250V	0.81	0.85	1.00	1.17	1.32	1.45	1.50
	350 to 600V	0.77	0.82	1.00	1.16	1.30	1.41	1.43

Компания «ЭлектроПласт» предлагает заключение долгосрочных отношений при поставках импортных электронных компонентов на взаимовыгодных условиях!

Наши преимущества:

- Оперативные поставки широкого спектра электронных компонентов отечественного и импортного производства напрямую от производителей и с крупнейших мировых складов;
- Поставка более 17-ти миллионов наименований электронных компонентов;
- Поставка сложных, дефицитных, либо снятых с производства позиций;
- Оперативные сроки поставки под заказ (от 5 рабочих дней);
- Экспресс доставка в любую точку России;
- Техническая поддержка проекта, помощь в подборе аналогов, поставка прототипов;
- Система менеджмента качества сертифицирована по Международному стандарту ISO 9001;
- Лицензия ФСБ на осуществление работ с использованием сведений, составляющих государственную тайну;
- Поставка специализированных компонентов (Xilinx, Altera, Analog Devices, Intersil, Interpoint, Microsemi, Aeroflex, Peregrine, Syfer, Eurofarad, Texas Instrument, Miteq, Cobham, E2V, MA-COM, Hittite, Mini-Circuits,General Dynamics и др.);

Помимо этого, одним из направлений компании «ЭлектроПласт» является направление «Источники питания». Мы предлагаем Вам помощь Конструкторского отдела:

- Подбор оптимального решения, техническое обоснование при выборе компонента;
- Подбор аналогов;
- Консультации по применению компонента;
- Поставка образцов и прототипов;
- Техническая поддержка проекта;
- Защита от снятия компонента с производства.

Как с нами связаться

Телефон: 8 (812) 309 58 32 (многоканальный)
Факс: 8 (812) 320-02-42
Электронная почта: org@eplast1.ru
Адрес: 198099, г. Санкт-Петербург, ул. Калинина, дом 2, корпус 4, литера А.