Preliminary Data Sheet

---

*Sensi*BLE 2.0 SIBA-XXX

Version 1.0.1
April, 2019

*Sensi*BLE 2.0 – Certified Product combining MCU, Sensors and Bluetooth**.**

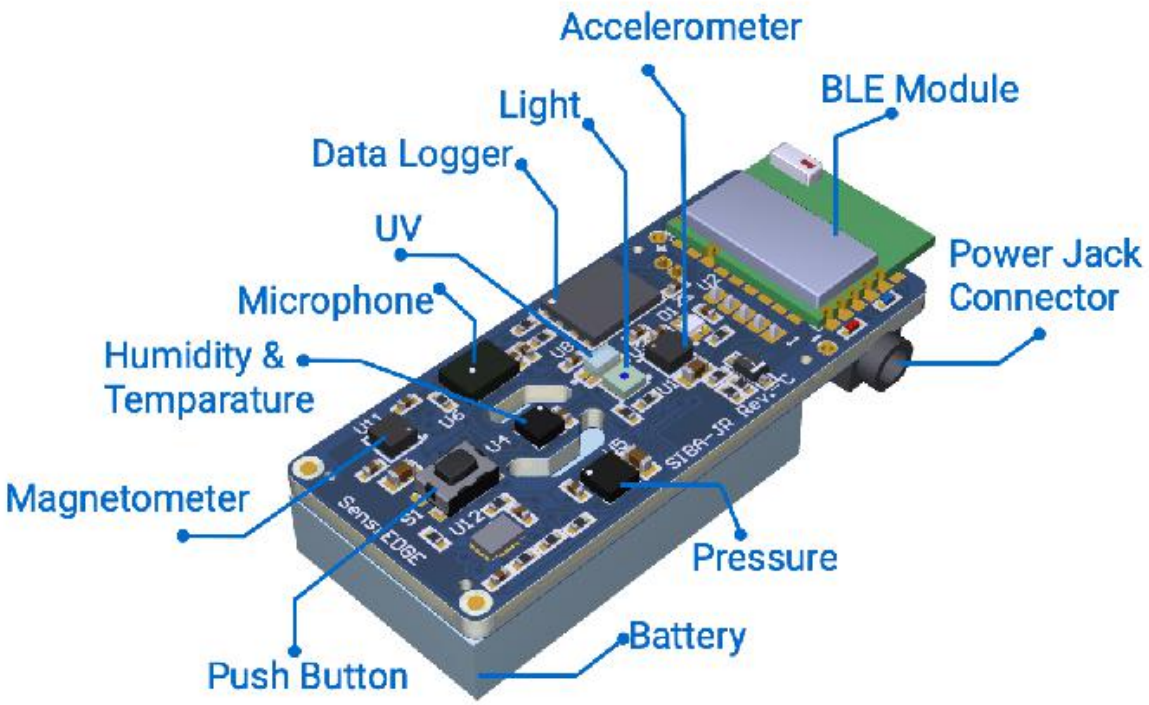

List Of Content

List Of Content 2

List of Figures 5

List of Tables 5

1 Overview 5

1.1 General Information 6

1.2 Feature's Summary 8

1.3 Block Diagram 10

2 Main Hardware Components 11

2.1 Bluetooth & CPU 11

2.1.1 SPBTLE-1S 11

2.2 Sensors 11

2.2.1 LIS2DW12: 3D accelerometer 12

2.2.2 LIS2MDL: 3-Axis Magnetometer 12

2.2.3 HTS221: humidity and temperature 12

2.2.4 LPS25H: pressure sensor 12

2.2.5 MP34DT05-A: digital microphone 12

2.2.6 APDS-9250: Digital RGB, IR and Ambient Light Sensor 12

2.2.7 VEML6075: UV Sensor 13

2.3 Data Logger 13

2.3.1 AT25XE041B 13

2.4 User Interface 13

2.4.1 KMR221NG Button 13

2.4.2 FXL6408 Port Expander 13

2.4.3 LTST-C195KGJRKT Dual color chip LED 13

3 Bluetooth & CPU 14

3.1 SPBTLE-1S 14

3.1.1 General Description 14

3.1.2 Features 15

3.1.3 Block Diagram 16

3.1.4 Connections 16

4 Sensors 17

4.1 3D accelerometer 17

4.1.1 General Description 17

4.1.2 Features 17

4.1.3 Block Diagram 18

4.1.4 Connections and Signals 18

4.2 Magnetic Sensor 20
4.2.1 General Description 20
4.2.2 Features 20
4.2.3 Block Diagram 20
4.2.4 Connections and Signals 21
4.3 Humidity and Temperature Sensor 23
4.3.1 General Description 23
4.3.2 Features 23
4.3.3 Block Diagram 23
4.3.4 Connections and Signals 24
4.4 Pressure Sensor 25
4.4.1 General Description 25
4.4.2 Features 25
4.4.3 Block Diagram 26
4.4.4 Connections and Signals 26
4.5 Digital Microphone 27
4.5.1 General Description 27
4.5.2 Features 28
4.5.3 Connections and Signals 28
4.6 Digital RGB, IR and Ambient Light Sensor 29
4.6.1 General Description 29
4.6.2 Features 29
4.6.3 Block Diagram 30
4.6.4 Connections and Signals 30
4.7 UV Sensor 31
4.7.1 General Description 31
4.7.2 Features 32
4.7.3 Block Diagram 32
4.7.4 Connections and Signals 33

5 Serial Flash 34
5.1 AT25XE041B 34
5.1.1 Description 34
5.1.2 Features 34
5.1.3 Block Diagram 36
5.1.4 Connections and Signals 36

6 User Interface 38
6.1 Port Expander 38
6.1.1 Description 38
6.1.2 Features 38

6.1.3 Block Diagram 39
6.1.4 Connections and Signals 39

7 Absolute Maximum Characteristics 41

8 Operational Characteristics 42
7.1 Power supplies 42
7.2 Power Consumption 42

9 DC Electrical Characteristics 43

10 Environmental Specifications 44

11 Mechanical Drawings 45
11.1 SensiBLE 2.0 Module: SIBA 45

List of Figures

Figure 1 - *Sensi*BLE 2.0, Block Diagram 10
Figure 2 - *Sensi*BLE 2.0, Connections Diagram 11
Figure 3 - SPBTLE-1S, Block Diagram 16
Figure 4 - SPBTLE-1S, Schematic Connections 16
Figure 5 - LIS2DW12, Block Diagram 18
Figure 6 - LIS2DW12, Direction of the Detectable Accelerations 18
Figure 7 - LIS2DW12, Schematic Connections 19
Figure 8 - LIS2MDL, Block Diagram 21
Figure 9 - LIS2MDL, Direction of the Detectable Magnetic Fields 21
Figure 10 - LIS2MDL, Schematic Connections 22
Figure 11 - HTS221, Block Diagram 23
Figure 12 - HTS221, Schematic Connections 24
Figure 13 - LPS25H, Block Diagram 26
Figure 14 - LPS25H, Schematic Connections 27
Figure 15 - MP34DT05-A, Schematic Connections 28
Figure 16 - APDS-9250, Block Diagram 30
Figure 17 - APDS-9250, Schematic Connections 31
Figure 18 - VEML6075, Block Diagram 32
Figure 19 - VEML6075, Schematic Connections 33
Figure 20 - AT25XE041B, Block Diagram 36
Figure 21 - AT25XE041B, Schematic Connections 36
Figure 22 - FXL6408, Block Diagram 39
Figure 23 - FXL6408, Schematic Connections 40
Figure 24 - *Sensi*BLE 2.0, Top View [mm] 45
Figure 25 - *Sensi*BLE 2.0, Down View 45

List of Tables

Table 1 - *Sensi*BLE 2.0, Features Summary 8
Table 2 - LIS2DW12, Pin Assignment 19
Table 3 - LIS2MDL, Pin Assignment 21
Table 4 - HTS221, Pin Assignment 24
Table 5 - LPS25H, Pin Assignment 26
Table 6 - MP34DT05-A, Pin Assignment 28
Table 7 - APDS-9250, Pin Assignment 30
Table 8 - VEML6075, Pin Assignment 33
Table 9 - AT25XE041B, Pin Assignment 37
Table 10 - FXL6408, Pin Assignment 39
Table 11 - *Sensi*BLE 2.0, Power Consumption 39

1 Overview

1.1 General Information

The *Sensi*BLE 2.0 is a low cost System on Module with low power consumption. *Sensi*BLE 2.0 integrates rechargeable Li-Ion battery, variety of Sensors and low power Cortex M0 core that can execute both Bluetooth protocols and customer application. It provides an ideal building block that easily integrates with a wide range of target markets requiring rich functionality. *Sensi*BLE 2.0 is compact, cost effective and with low power consumption.

The *Sensi*BLE 2.0 enables wireless connectivity, not requiring any RF experience or expertise. It provides a complete RF platform in a tiny form factor and being a certified solution optimizes the time to market of the final applications.

*Sensi*BLE 2.0 IoT Module is a Bridging-the-Gap solutions to any embedded design. Fit to the vast array of battery-powered applications requiring the integration of Multiple Sensors with BLE connectivity without compromising on cost and power consumption.

1. Base Part numbers

SIBA : SensiBLE 2.0 Module (Base part number)

2. SensiBLE 2.0 Full Configuration Versions

SIBA-JRAB : SensiBLE 2.0 Module - Wearable Bluetooth 4.2 Data Logger, including Accelerometer, Magnetometer, Humidity, Temperature, Pressure, Microphone, UV and Light Sensors integrating Rechargeable battery and American power adaptor. WearaBLE is integrated inside Enclosure plastic BOX.

SIBA-JREB : SensiBLE 2.0 Module - Wearable Bluetooth 4.2 Data Logger, including Accelerometer, Magnetometer, Humidity, Temperature, Pressure, Microphone, UV and Light Sensors integrating Rechargeable battery and European power adaptor. WearaBLE is integrated inside Enclosure plastic BOX.

3. Eval Kit part Number

SIBA-JRAB-DKL : *Sensi*BLE 2.0 US Dev. Kit
SIBA-JREB-DKL : *Sensi*BLE 2.0 EU Dev. Kit

4. Schematics:

SIBA-JRxx : SensiBLE 2.0 Module with Sensors

5. Software:
SensiBLE 2.0_SW
BlueSTSDK_Android
BlueSTSDK_iOS
SensiBLE-SDK-W

Contact SensiEDGE support services for further information:
mailto:Support@SensiEDGE.com.

1.2 Feature's Summary

Table 1 - *Sensi*BLE 2.0, Features Summary

Product Type	Module
Dimension	17 x 43 x 9 mm
Bluetooth	v4.2 Bluetooth Low Energy 2.4GHz
BLE Certified Module	SPBTLE-1S
Technology	Bluetooth Smart sensor and hub device
BLE Chipset	ST BlueNRG-1
Antenna	On Board
RF Conn/ Antenna	Chip Antenna
Internal High Speed Clock	32MHZ crystal oscillator
External Low Power Clock	32.768KHZ
Tx power	+ 5 dBm
Rx sensitivity	-84 dBm
Certification	CE/FCC/IC/SRRC
BQE Qualified	BQE qualified
Processor	ARM® 32-bit Cortex®-M0 CPU High performance, ultra-low power
Sensors	
Accelerometer	LIS2DW12
Magnetic sensor	LIS2MDL
Pressure sensor	LPS25H
Relative humidity & temperature	HTS221
Digital MEMS Microphone	MP34DT05-A
Light Sensor	APDS-9250
UV Sensor	VEML6075

User Interface	
I/O Expander	FXL6408
RG LED	LTST-C195KGJRKT
User Button	KMR221NG
Data Logger	4Mbit SPI_Flash
Serial Flash	AT25XE041B-MHN-T
Power Interface	
Rechargeable Battery	Yes
Micro - USB	Yes (on Debugger Board)
External Power	4.25v < Vin < 6.5 v

1.3 Block Diagram

The system based on 5 main blocks:

- Connectivity & CPU
- Power
- Sensors
- Data Logger
- User Interface

Figure 1 - *Sensi*BLE 2.0, Block Diagram

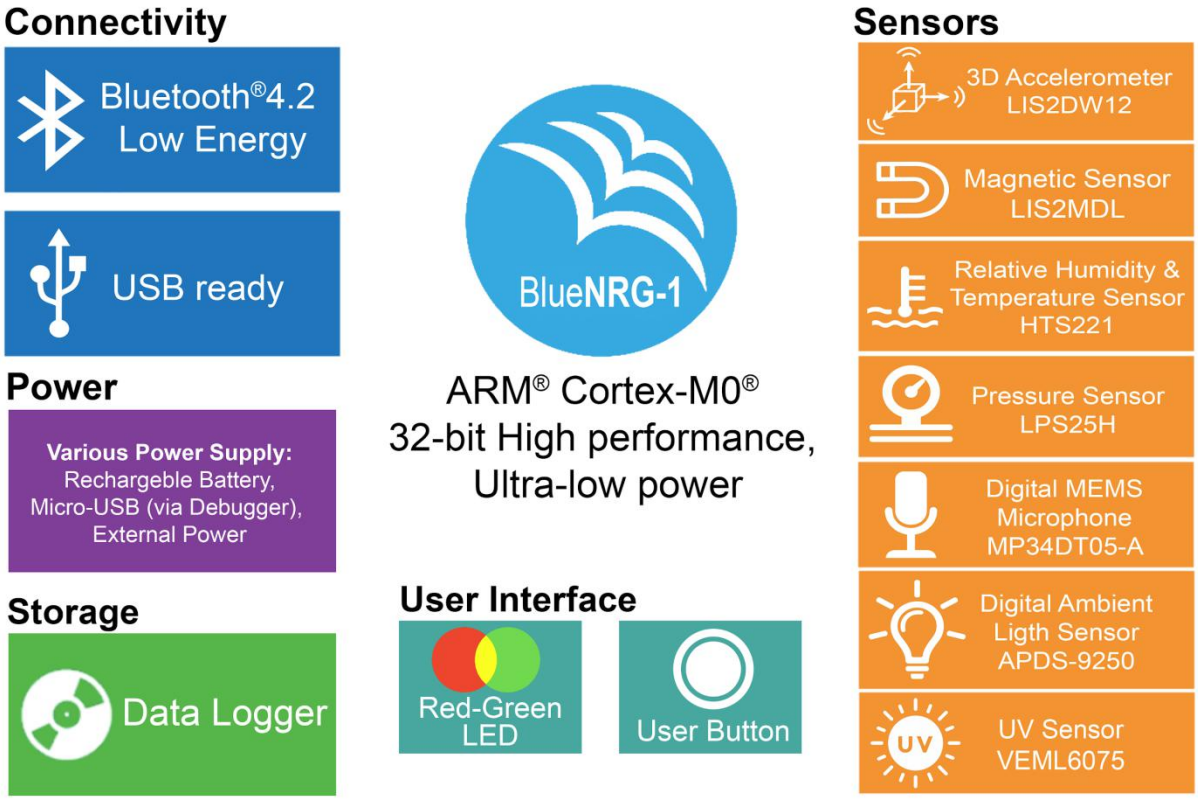

2 Main Hardware Components

This section summarizes the main hardware building blocks of the *Sensi*BLE 2.0 Module.
Part of the Connectivity used by the *Sensi*BLE 2.0 module for internal connection between MCU and Sensors.
Microphone use DFSDM interface, Sensors are connected to MCU using I²C.

Figure 2 - *Sensi*BLE 2.0, Connections Diagram

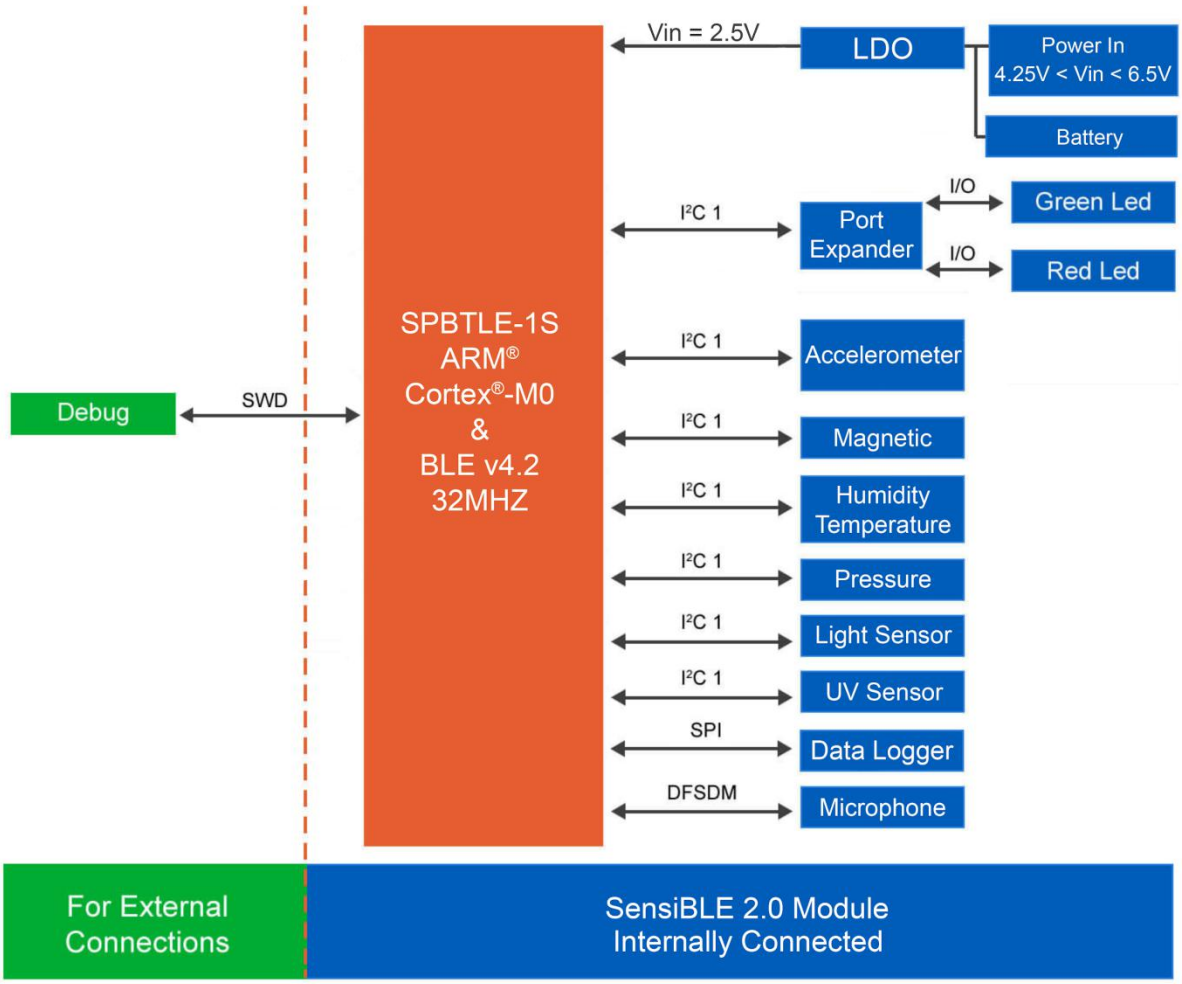

2.1 Bluetooth & CPU

2.1.1 SPBTLE-1S

The SensiBLE module contains ST's SPBTLE-1S. The SPBTLE-1S is a Bluetooth Low Energy application processor module compliant with Bluetooth® specifications v4.2 with embedded ceramic antenna. The SPBTLE-1S module has been designed around the ST BlueNRG-1 SoC where its Cortex-M0 core can execute both Bluetooth protocols and customer application.

2.2 Sensors

The *Sensi*BLE 2.0 module contains the variety of sensors:

- ST's 3D accelerometer
- ST's 3-Axis Magnetometer
- ST's humidity and temperature
- ST's pressure sensor
- ST's digital microphone
- Avago's Digital RGB, IR and Ambient Light Sensor
- Vishay's UV Sensor

2.2.1 LIS2DW12: 3D accelerometer

The LIS2DW12 is an ultra-low-power high-performance three-axis linear digital accelerometer. Enabling always-on low-power features for an optimal motion experience.

2.2.2 LIS2MDL: 3-Axis Magnetometer

The LIS2MDL is an ultra low-power high-performance 3-Axis Magnetometer. This device offers the unique flexibility for designers to implement movement and position detection in space-constrained products such as personal navigation devices.

2.2.3 HTS221: humidity and temperature

The HTS221 is an ultra compact sensor for relative humidity and temperature. It includes a sensing element consists of a polymer dielectric planar capacitor structure and a mixed signal ASIC to provide the measurement information through digital serial interfaces.

2.2.4 LPS25H: pressure sensor

The LPS25H is an ultra compact absolute piezoresistive pressure sensor. It includes a monolithic sensing element capable to detect.

2.2.5 MP34DT05-A: digital microphone

The MP34DT05-A is an ultra-compact, low power, omnidirectional, digital MEMS microphone built with a capacitive sensing element and an IC interface.
The sensing element, capable of detecting acoustic waves, is manufactured using a specialized silicon micromachining process dedicated to producing audio sensors.

2.2.6 APDS-9250: Digital RGB, IR and Ambient Light Sensor

The Avago APDS-9250 is a low-voltage digital RGB, IR and ambient light sensor device that converts light intensity to digital output signal. The color-sensing feature is useful in applications such as LED RGB backlight control, solid-state lighting, reflected LED color sampler and fluorescent light color temperature detection. With the IR sensing feature, the device can be used to read the IR content in certain lighting condition and detect the type of light source.

2.2.7 VEML6075: UV Sensor

The Vishay's VEML6075 senses UVA and UVB light and incorporates photodiode, amplifiers, and analog / digital circuits into a single chip using a CMOS process. When the UV sensor is applied, it is able to detect UVA and UVB intensity to provide a measure of the signal strength as well as allowing for UVI measurement.

2.3 Data Logger

2.3.1 AT25XE041B

The *Sensi*BLE 2.0 module contains Adesto® AT25XE041B. Adesto's AT25XE041B is a serial flash memory device.
Flexible erase architectures with page erase and block erase sizes make this memory ideal for data storage applications. AT25XE products feature ultra low-energy operation for active current, Program and Erase operations, as well as improved standby energy consumption. The device contains a specialized One-Time Programmable (OTP) security register usable for unique device serialization, system-level electronic serial number storage, and locked key storage.

2.4 User Interface

The *Sensi*BLE 2.0 module contains the variety of user interfaces:

- S&K's Button (IO14)
- ON Semiconductor's Port Expander
- Lite-On's RG-LED (Led G @ PE_IO1, Led R @ PE_IO5)

2.4.1 KMR221NG Button

S&K's button is a SMT Top Actuated operating direction button.

2.4.2 FXL6408 Port Expander

The FXL6408 is a Low-Power, Fully Configurable 8-bit I^2C-controlled GPIO expander. It is designed to allow voltage translation from levels as low as 1.65V and up to 4.0V.

2.4.3 LTST-C195KGJRKT Dual color chip LED

Lite-On's SMD Red/Green LED based 2 separate LED's in a package, allows two colors (red and green), while only having 4 pins (Dual set cathode and anode) miniature sizes and special configurations for space-sensitive applications. The color of the LED depends on the polarity of the connection, allowing separate and both colors at the same time.

3 Bluetooth & CPU

3.1 SPBTLE-1S

3.1.1 General Description

The SPBTLE-1S is a Bluetooth Low Energy application processor module compliant with Bluetooth® specifications v4.2 with embedded ceramic antenna.

The SPBTLE-1S module has been designed around the ST BlueNRG-1 SoC where its Cortex-M0 core can execute both Bluetooth protocols and customer application. A complete power-optimized Bluetooth stack library provides:

- Master, slave, multiple roles support
- GAP: central, peripheral, observer or broadcaster roles
- Simultaneous advertising and scanning
- capability of being slave of up to two masters simultaneously
- ATT/GATT: client and server
- SM: privacy, authentication and authorization
- L2CAP
- Link Layer: AES-128 encryption and decryption

The SPBTLE-1S has 160 KB embedded Flash and 24 KB embedded RAM memory.

In the module are available 32 MHz and 32 KHz crystal oscillators. It has been designed to leverage the BlueNRG-1 integrated DC-DC step down converter in order to achieve best power consumption in active mode.

It can be configured to support both application processor (host-less) and network processor (hosted) modes.

Being based on the BlueNRG-1 SoC, the SPBTLE-1S module leverages all the tools and documentation of its ecosystem: Development Kit, Application Notes, User Manuals, Design Notes & Tips. A wide set of sample programs are also available in C source code.

The SPBTLE-1S module has a wide set of peripherals available for customer application (1x UART interface, 1 x SPI interface, 2 x I2C interface, 14 GPIO, 2 x multifunction timer, 10-bit ADC, Watchdog & RTC, DMA controller, PDM stream processor).

The SPBTLE-1S module enables wireless connectivity into electronic devices, not requiring any RF experience or expertise for integration into the final product. The SPBTLE-1S module provides a complete RF application platform in a tiny form factor (11.5 x 13.5 x 2.0 mm) and being a certified solution optimizes the time to market of the final applications.

The SPBTLE-1S module allows applications to meet the tight advisable peak current requirements imposed with the use of standard coin cell batteries. Optimized results are obtained with the embedded high-efficiency DC-DC step-down. SPBTLE-1S can be powered directly with a standard 3 V coin cell battery as with a pair of AAA batteries or any power source from 1.7 to 3.6 V.

3.1.2 Features

- Bluetooth v4.2 compliant
  - Supports master and slave modes
  - Multiple roles supported simultaneously
- High performance, ultra-low power CortexM0 32-bit based architecture core
- Programmable embedded 160 KB Flash
- 24 KB embedded RAM with data retention
- Interfaces:
  - 1 x UART, 2 x I²C, 1xSPI, 14 x GPIO, 2x multifunction timer, 10-bit ADC, Watchdog & RTC, DMA controller, PDM stream processor, SWD debug Interface
- Bluetooth radio performance:
  - Max Tx power: + 5 dBm
  - Excellent link reliability
- On-board chip antenna
- Small form factor: 11.5 mm x 13.5 mm
- Complemented with Bluetooth low energy protocol stack library (GAP, GATT, SM, L2CAP, LL)
- AES security co-processor
- Bluetooth low energy SDK with wide range of profile available
- Certifications:
  - EU (RED) Type certificate
  - FCC, IC modular approval certification
  - SRRC Chinese Certification
  - BT SIG End Product QDID
- Pre-programmed UART bootloader
- Operating supply voltage: from 1.7 to 3.6 V
- Operating temperature range: -40 °C to 85 °C

3.1.3 Block Diagram

Figure 3 - SPBTLE-1S, Block Diagram

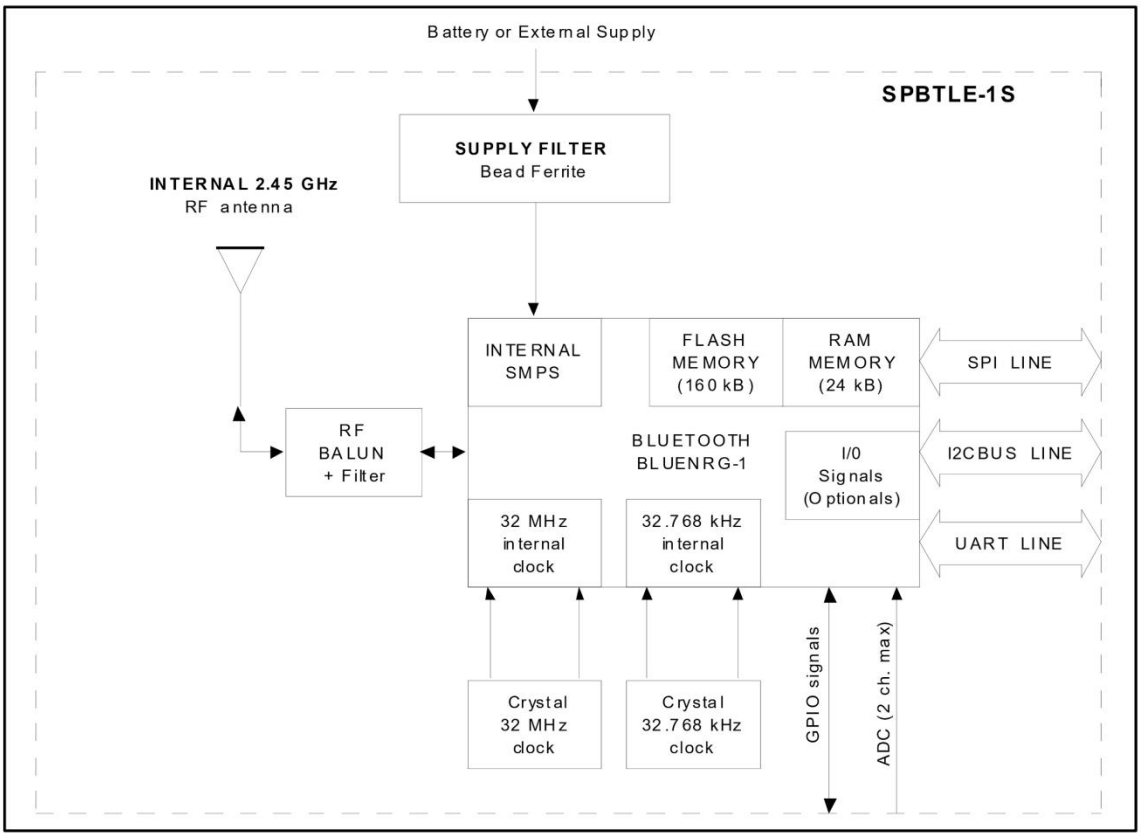

3.1.4 Connections

Figure 4 - SPBTLE-1S, Schematic Connections

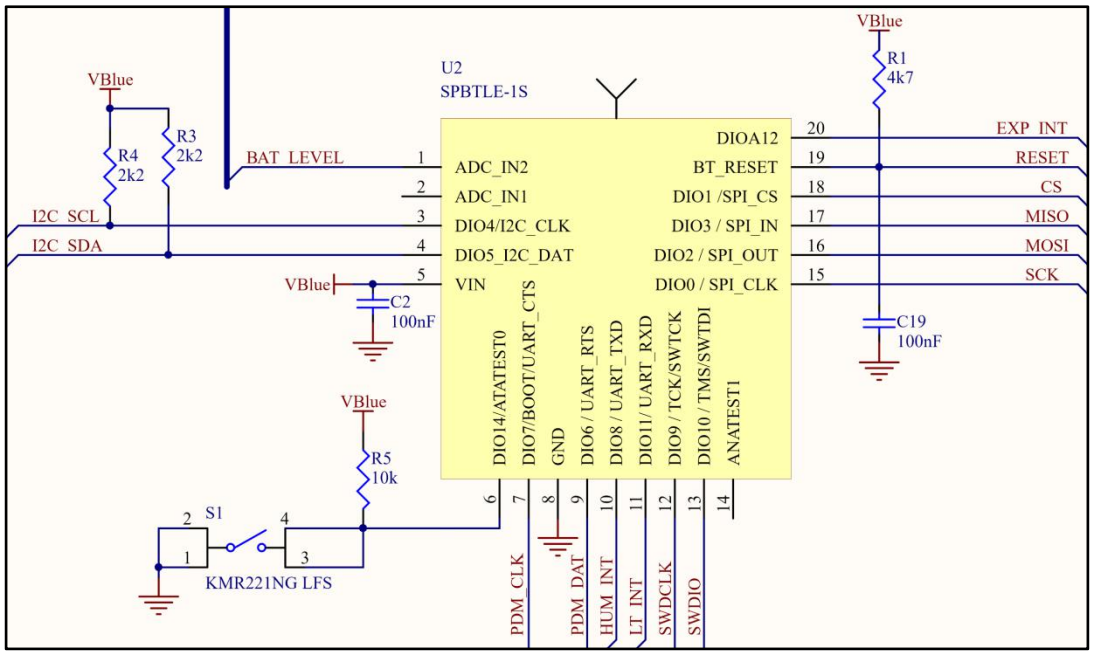

4 Sensors

4.1 3D accelerometer

4.1.1 General Description

The LIS2DW12 is a 3D digital accelerometer system-in-package with a digital I²C/SPI serial interface standard output, performing at 90 µA in high-resolution mode and below 1 µA in low-power mode. Thanks to the ultra-low noise performance of the accelerometer, the device combines always-on low-power features with superior sensing precision for an optimal motion experience for the consumer. Furthermore, the accelerometer features smart sleep-to-wakeup (activity) and return-to-sleep (inactivity) functions that allow advanced power saving.

The device has a dynamic user-selectable full-scale acceleration range of ±2/±4/±8/±16 g and is capable of measuring accelerations with output data rates from 1.6 Hz to 1600 Hz.

The LIS2DW12 has a dedicated internal engine to process motion and acceleration detection including free-fall, wakeup, highly configurable single/double-tap recognition, activity/inactivity, stationary/motion detection, portrait/landscape detection and 6D/4D orientation.

The LIS2DW12 can be configured to generate interrupt signals by using hardware recognition of free-fall events, 6D orientation, tap and double-tap sensing, activity or inactivity, and wake-up events.

The LIS2DW12 has an integrated 32-level first-in, first-out (FIFO) buffer allowing the user to store data in order to limit intervention by the host processor.

The embedded self-test capability allows the user to check the functioning of the sensor in the final application.

The ultra-small size and weight of the SMD package make it an ideal choice for handheld portable applications such as smartphones, IoT connected devices, and wearables or any other application where reduced package size and weight are required.

4.1.2 Features

- Ultra-low power consumption: 50 nA in power-down mode, below 1 µA in active low-power mode
- Very low noise: down to 1.3 mg RMS in low-power mode
- Multiple operating modes with multiple bandwidths
- Android stationary detection, motion detection
- Supply voltage, 1.62 V to 3.6 V

- Independent IO supply
- ±2g/±4g/±8g/±16g full scale
- High-speed I²C/SPI digital output interface
- Single data conversion on demand
- 16-bit data output
- Embedded temperature sensor
- Self-test
- 32-level FIFO
- 10000 g high shock survivability
- ECOPACK®, RoHS and “Green” compliant

4.1.3 Block Diagram

Figure 5 - LIS2DW12, Block Diagram

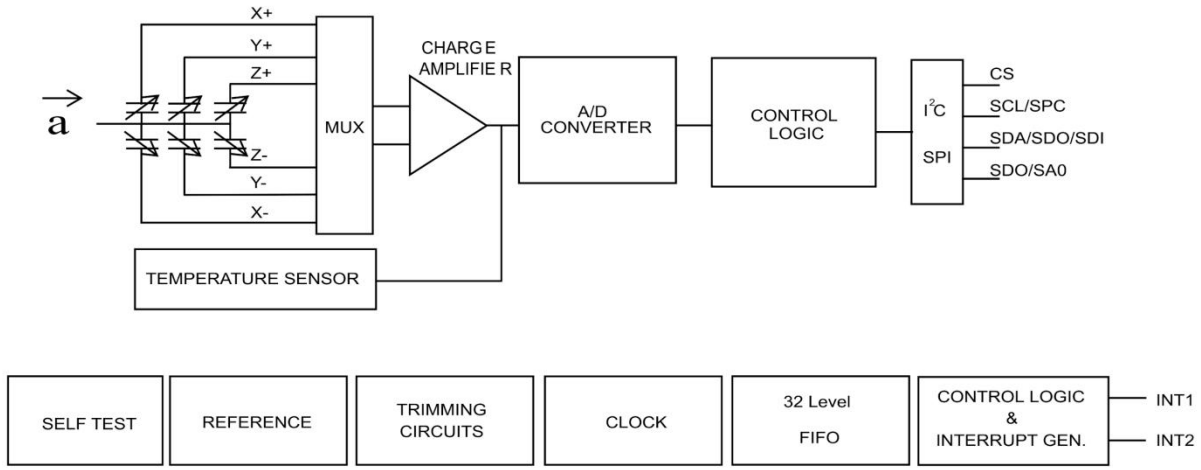

Figure 6 - LIS2DW12, Direction of the Detectable Accelerations

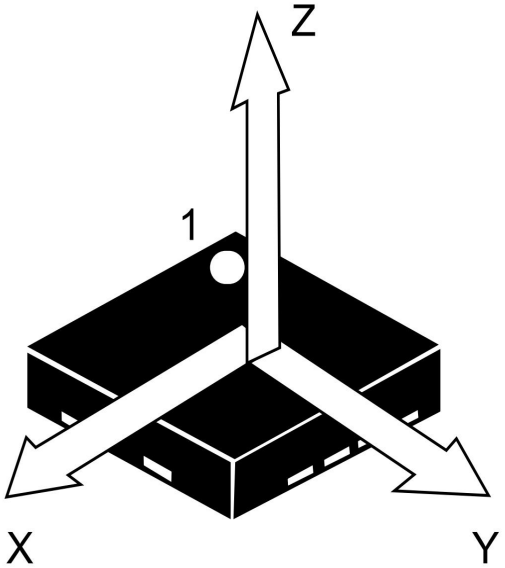

4.1.4 Connections and Signals

Figure 7 - LIS2DW12, Schematic Connections

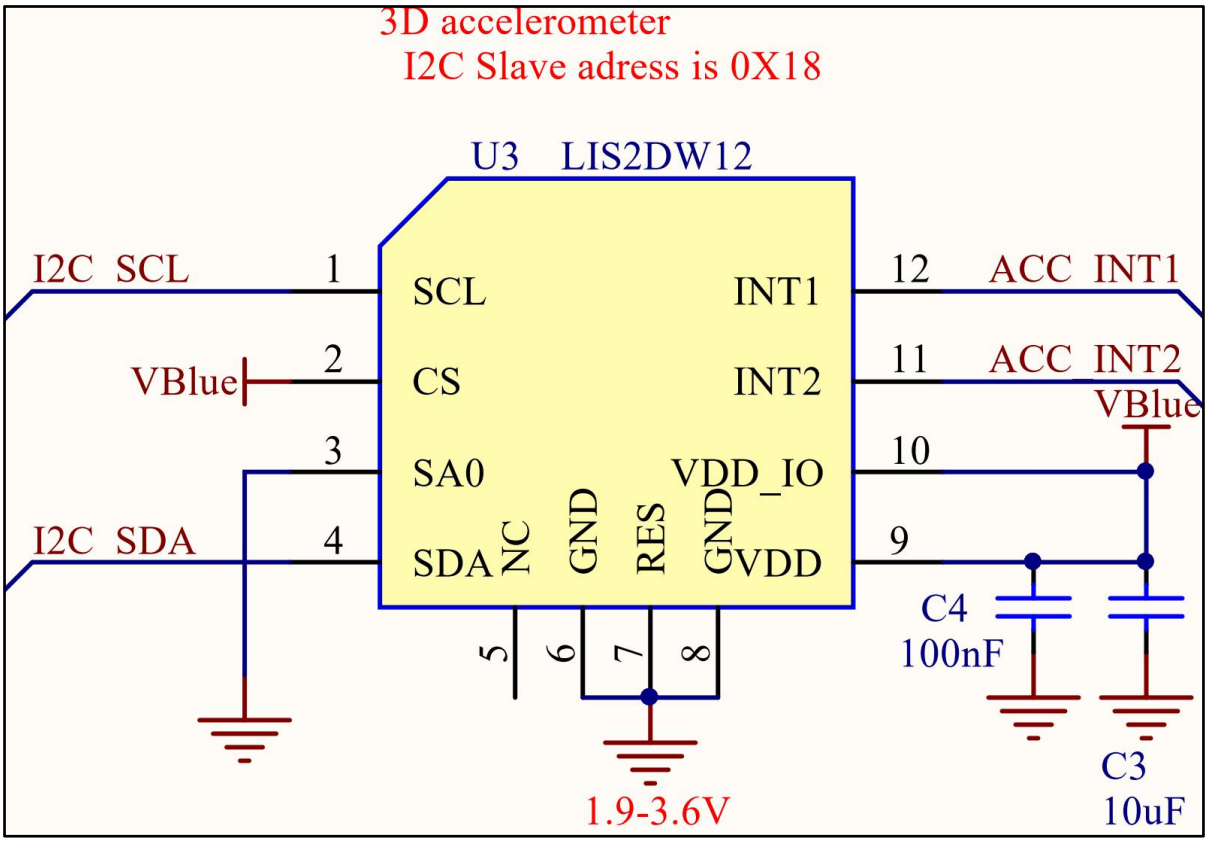

Table 2 - LIS2DW12, Pin Assignment

Pin#	Name	Function
1	SCL SPC	I²C serial clock (SCL) SPI serial port clock (SPC)
2	CS	SPI enable I²C/SPI mode selection (1: SPI idle mode / I²C communication enabled; 0: SPI communication mode / I²C disabled)
3	SDO SA0	SPI serial data output (SDO) I²C less significant bit of the device address (SA0)
4	SDA SDI SDO	I²C serial data (SDA) SPI serial data input (SDI) 3-wire interface serial data output (SDO)
5	NC	Internally not connected. Can be tied to VDD, VDDIO, or GND.
6	GND	0 V supply

7	RES	Connect to GND
8	GND	0 V supply
9	VDD	Power supply
10	VDD_IO	Power supply for I/O pins
11	INT2	Interrupt pin 2. Clock input when selected in single data conversion on demand.
12	INT1	Interrupt pin 1

4.2 Magnetic Sensor

4.2.1 General Description

The LIS2MDL is a 3D digital magnetometer system-in-package with a digital I²C and 3-wire SPI serial interface standard output, performing at 200μA in high-resolution mode and no more than 50 μA in low-power mode (at 20 Hz output data rate). Thanks to the ultra-low noise performance of the magnetometer, the device combines always-on low-power features with superior sensing precision for an optimal motion experience for the consumer.

The LIS2MDL has a magnetic field dynamic range of ±50 gauss.

The LIS2MDL includes an I2C serial bus interface that supports standard, fast mode, fast mode plus, and high-speed (100 kHz, 400 kHz, 1 MHz, and 3.4 MHz) and an SPI serial standard interface.

The LIS2MDL can be configured to generate an interrupt signal for magnetic field detection and to automatically compensate for hard-iron offsets provided from the higher application layer.

4.2.2 Features

- 3 magnetic field channels
- ±50 gauss magnetic dynamic range
- 16-bit data output
- SPI/I2C serial interfaces
- Analog supply voltage 1.71 V to 3.6 V
- Selectable power mode/resolution
- Single measurement mode
- Programmable interrupt generator
- Embedded self-test
- Embedded temperature sensor
- ECOPACK®, RoHS and “Green” compliant

4.2.3 Block Diagram

Figure 8 - LIS2MDL, Block Diagram

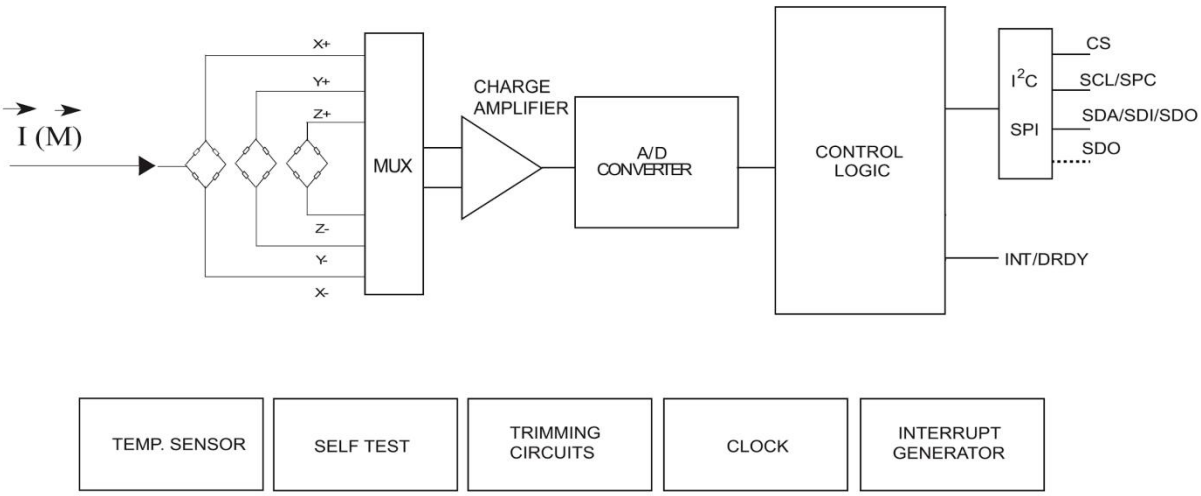

Figure 9 - LIS2MDL, Direction of the Detectable Magnetic Fields

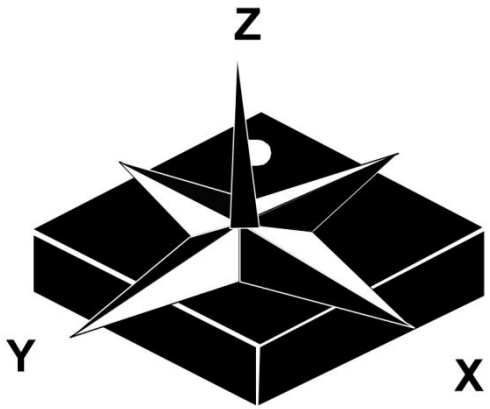

4.2.4 Connections and Signals

Table 3 - LIS2MDL, Pin Assignment

Pin#	Name	Function
1	SCL SPC	I²C serial clock (SCL) SPI serial port clock (SPC)
2	NC	Internally not connected. Can be tied to VDD, VDDIO, or GND.
3	CS	I²C/SPI mode selection (1: SPI idle mode / I²C communication enabled; 0: SPI communication mode / I²C disabled)

4	SDA SDI SDO	I²C serial data (SDA) SPI serial data input (SDI) 3-wire interface serial data output (SDO)
5	C1	Capacitor connection (C1 = 220 nF)
6	GND	Connected to GND
7	INT/DRDY/SDO	Interrupt/data-ready signal or SDO line for 4-wire SPI connection
8	GND	Connected to GND
9	VDD	Power supply
10	VDD_IO	Power supply for I/O pins
11	NC	Internally not connected. Can be tied to VDD, VDDIO, or GND.
12	NC	Internally not connected. Can be tied to VDD, VDDIO, or GND.

Figure 10 - LIS2MDL, Schematic Connections

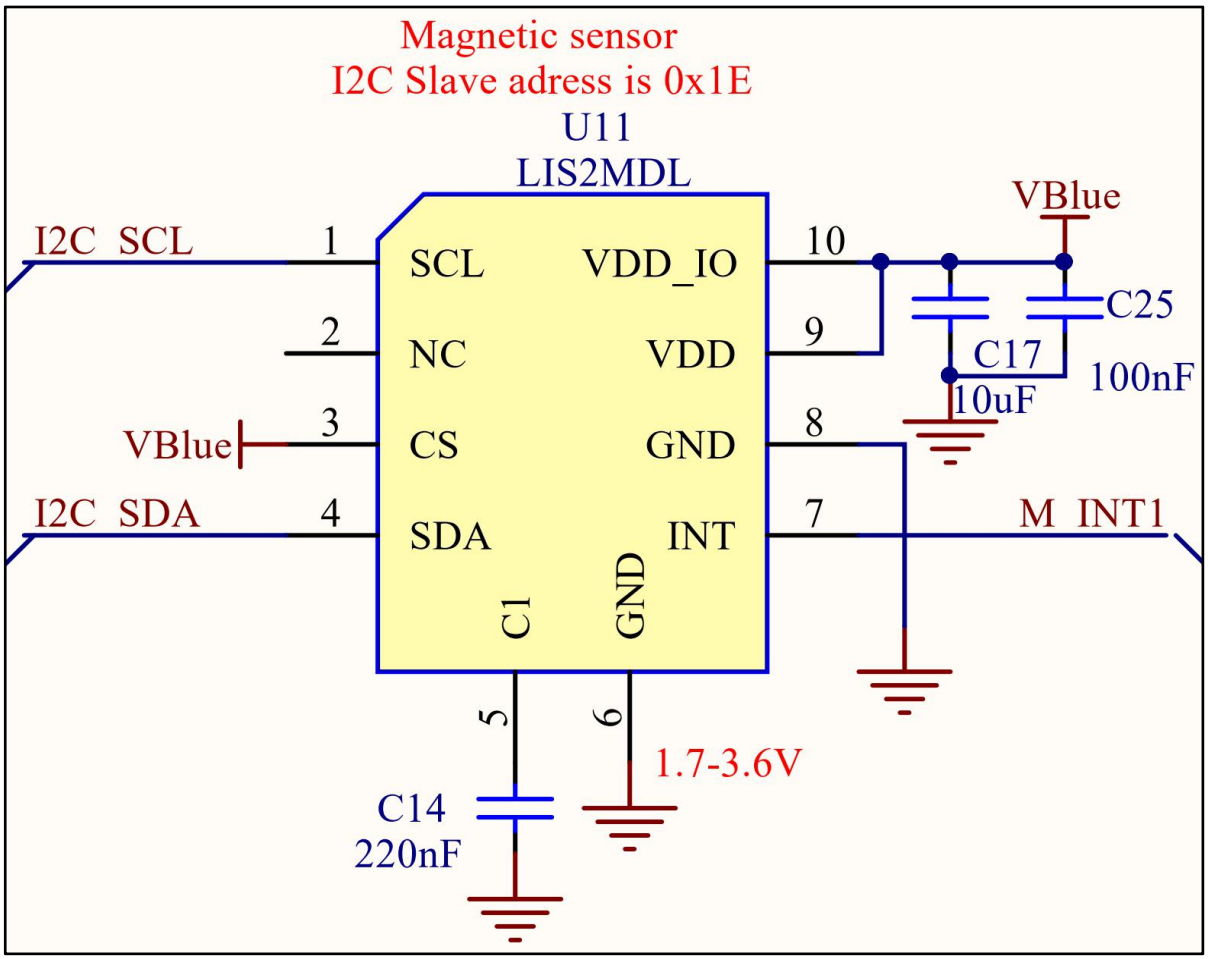

4.3 Humidity and Temperature Sensor

4.3.1 General Description

The HTS221 is an ultra-compact sensor for relative humidity and temperature. It includes a sensing element and a mixed signal ASIC to provide the measurement information through digital serial interfaces.

The sensing element consists of a polymer dielectric planar capacitor structure capable of detecting relative humidity variations and is manufactured using a dedicated ST process.

4.3.2 Features

- 0 to 100% relative humidity range
- Supply voltage: 1.7 to 3.6 V
- Low power consumption: 2 µA @ 1 Hz ODR
- Selectable ODR from 1 Hz to 12.5 Hz
- High rH sensitivity: 0.004% rH/LSB
- Humidity accuracy: ± 3.5% rH, 20 to +80% rH
- Temperature accuracy: ± 0.5 °C,15 to +40 °C
- Embedded 16-bit ADC
- 16-bit humidity and temperature output data
- SPI and I²C interfaces
- Factory calibrated
- Tiny 2 x 2 x 0.9 mm package
- ECOPACK® compliant

4.3.3 Block Diagram

Figure 11 - HTS221, Block Diagram

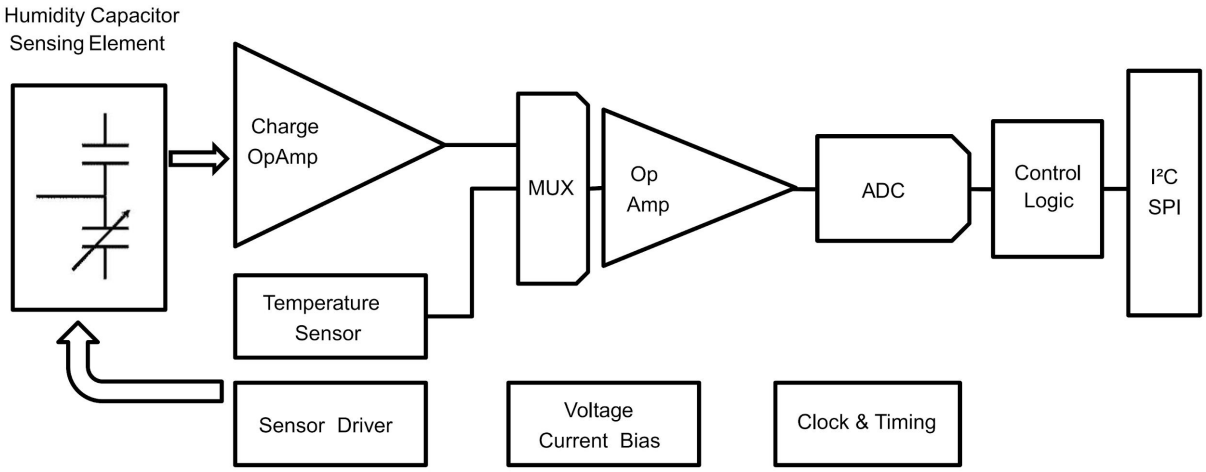

4.3.4 Connections and Signals

Figure 12 - HTS221, Schematic Connections

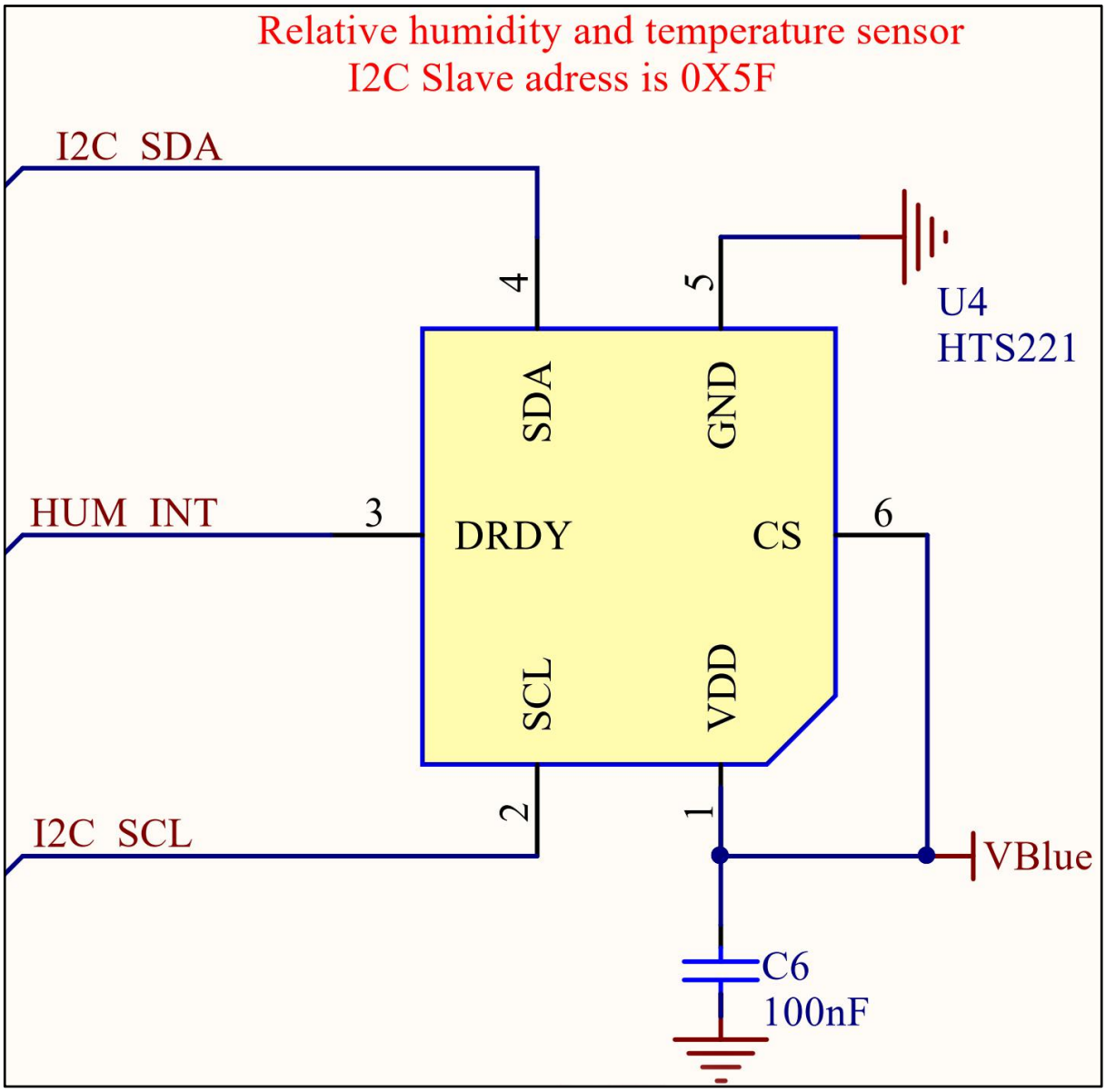

Table 4 - HTS221, Pin Assignment

Pin#	Name	Function
1	VDD	Power supply
2	SCL SPC	I²C serial clock (SCL) SPI serial port clock (SPC)
3	DRDY	Data Ready output signal

4	SDA SDI SDO	I²C serial data (SDA) SPI serial data input (SDI) 3-wire interface serial data output (SDO)
5	GND	Ground
6	SPI enable	I²C/SPI mode selection (1: SPI idle mode / I²C communication enabled; 0: SPI communication mode / I²C disabled)

4.4 Pressure Sensor

4.4.1 General Description

The LPS25H is an ultra-compact absolute piezoresistive pressure sensor. It includes a monolithic sensing element and an IC interface able to take the information from the sensing element and to provide a digital signal to the external world.

The sensing element consists of a suspended membrane realized inside a single mono-silicon substrate. It is capable of detecting pressure and is manufactured using a dedicated process developed by ST.

The membrane is very small compared to the traditionally built silicon micromachined membranes. Membrane breakage is prevented by an intrinsic mechanical stopper.

The IC interface is manufactured using a standard CMOS process that allows a high level of integration to design a dedicated circuit which is trimmed to better match the sensing element characteristics.

4.4.2 Features

- 260 to 1260 hPa absolute pressure range
- High-resolution mode: 1 Pa RMS
- Low power consumption
  – Low-resolution mode: 4 μA
  – High-resolution mode: 25 μA
- High overpressure capability: 20x full scale
- Embedded temperature compensation
- Embedded 24-bit ADC
- Selectable ODR from 1 Hz to 25 Hz
- SPI and I²C interfaces
- Embedded FIFO
- Supply voltage: 1.7 to 3.6 V
- High shock survivability: 10,000 g
- Small and thin package
- ECOPACK® lead-free compliant

4.4.3 Block Diagram

Figure 13 - LPS25H, Block Diagram

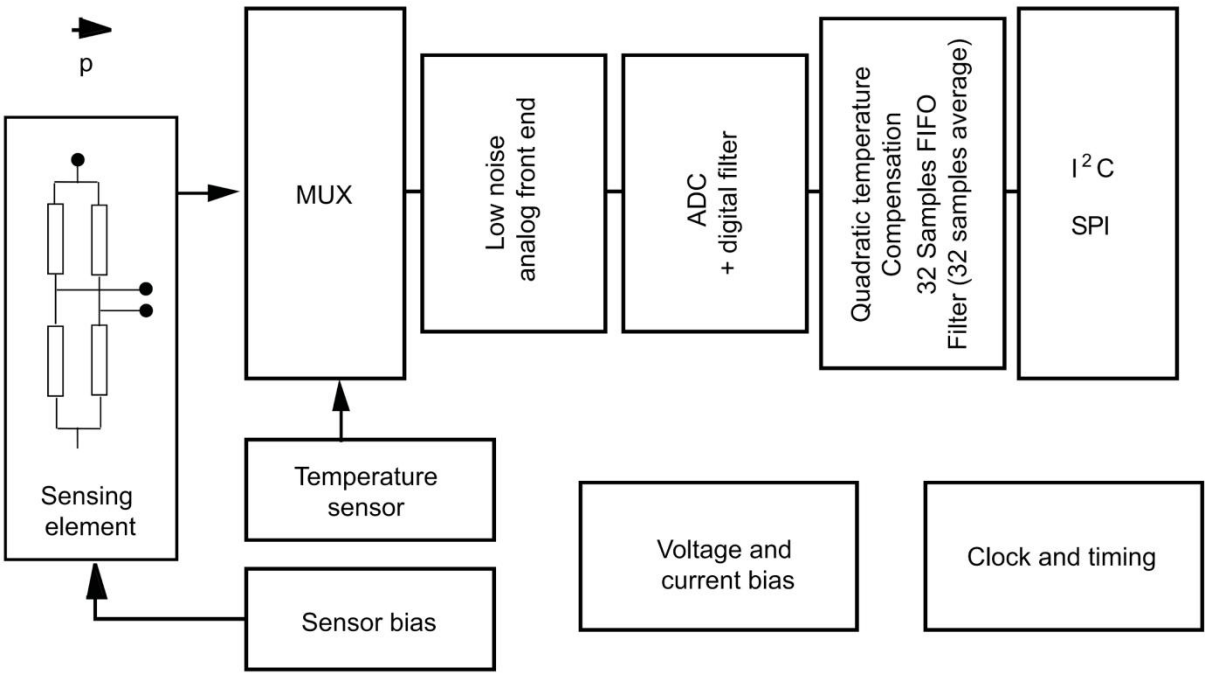

4.4.4 Connections and Signals

Table 5 - LPS25H, Pin Assignment

Pin#	Name	Function
1	VDD_IO	Power supply for I/O pins
2	SCL SPC	I²C serial clock (SCL) SPI serial port clock (SPC)
3	Reserved	Connect to GND
4	SDA SDI SDI/SDO	I²C serial data (SDA) 4-wire SPI serial data input (SDI) 3-wire serial data input / output (SDI/SDO)
5	SDO SA0	4-wire SPI serial data output (SDO) I²C less significant bit of the device address (SA0)
6	CS	SPI enable I²C/SPI mode selection (1: I²C mode; 0: SPI enabled)
7	INT1	Interrupt 1 (or data ready)
8	GND	0 V supply

9	GND	0 V supply
10	VDD	Power supply

Figure 14 - LPS25H, Schematic Connections

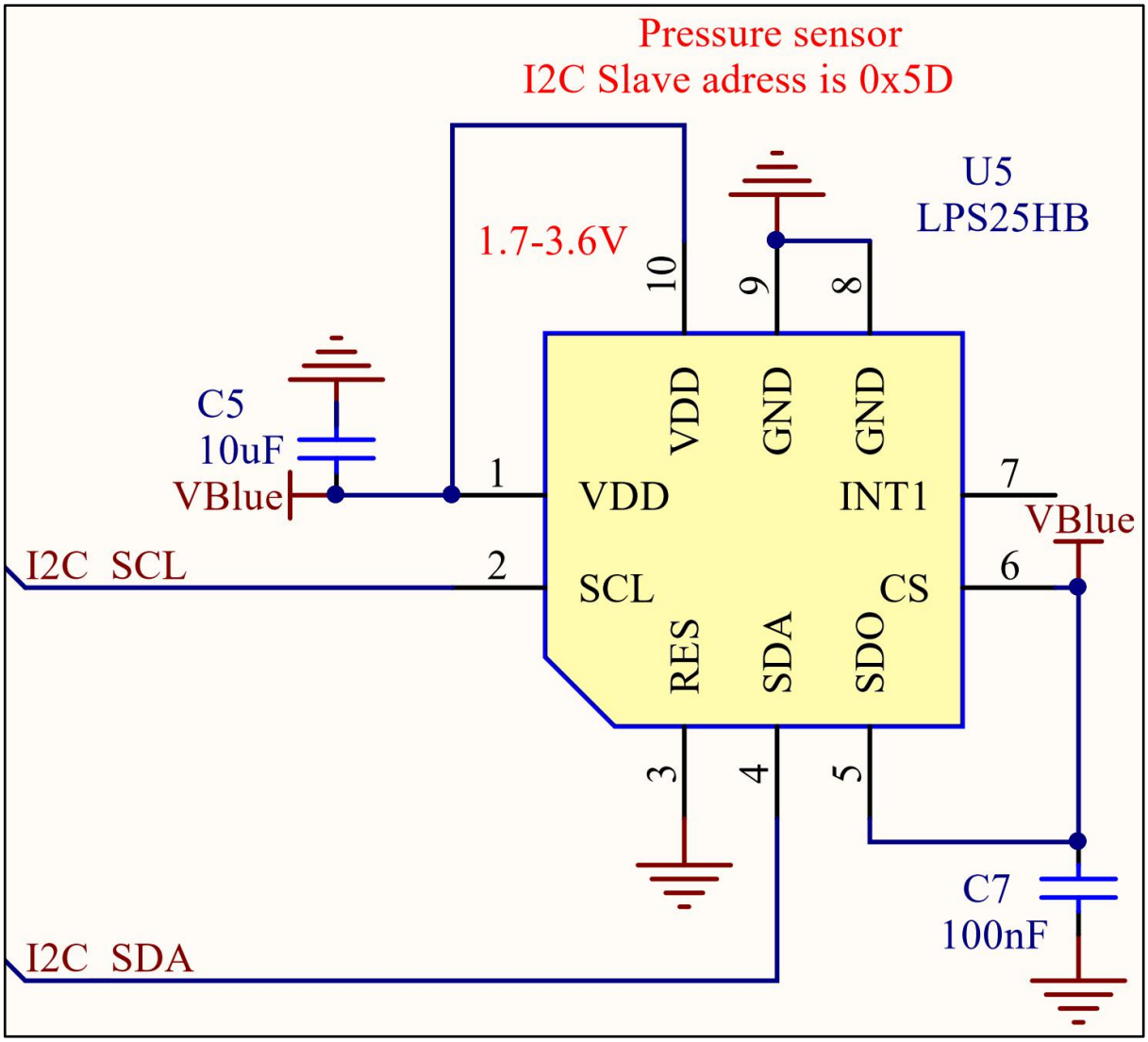

4.5 Digital Microphone

4.5.1 General Description

The MP34DT05-A is an ultra-compact, low-power, omnidirectional, digital MEMS microphone built with a capacitive sensing element and an IC interface.

The sensing element, capable of detecting acoustic waves, is manufactured using a specialized silicon micromachining process dedicated to producing audio sensors.

The IC interface is manufactured using a CMOS process that allows designing a dedicated circuit able to provide a digital signal externally in PDM format.

The MP34DT05-A is a low-distortion digital microphone with a 64 dB signal-to-noise ratio and –26 dBFS ±3 dB sensitivity.

4.5.2 Features

- Single supply voltage
- Low power consumption
- AOP = 122.5 dBSPL
- 64 dB signal-to-noise ratio
- Omnidirectional sensitivity
- –26 dBFS ±3 dB sensitivity
- PDM output
- HCLGA package
  - Top-port design
  - SMD-compliant
  - EMI-shielded
  - ECOPACK®, RoHS, and “Green” compliant

4.5.3 Connections and Signals

Figure 15 - MP34DT05-A, Schematic Connections

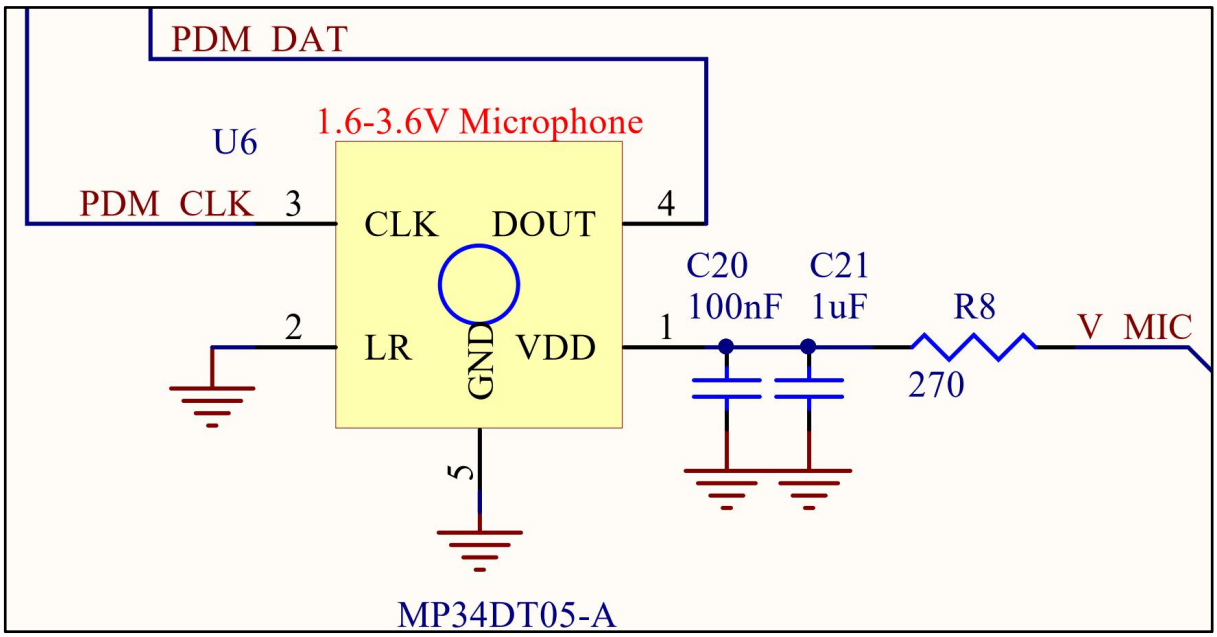

Table 6 - MP34DT05-A, Pin Assignment

Pin#	Name	Function
1	VDD	Power supply

2	LR	Left/Right channel selection
3	CLK	Synchronization input clock
4	DOUT	Left/Right PDM data output
5	GND	Ground

4.6 Digital RGB, IR and Ambient Light Sensor

4.6.1 General Description

The APDS-9250 is a low-voltage digital RGB, IR and ambient light sensor device that convert light intensity to digital output signal.

The APDS-9250 device uses 4 individual channels of red, green, blue, and IR (RGB+IR) in a specially designed matrix arrangement. This allows the device to have optimal angular response and accurate RGB spectral response with high lux accuracy over various light sources.

The device supports I^2C-bus interface and has a programmable interrupt controller that takes minimal micro-controller (MCU) resources.

The device detects light intensity under a variety of lighting conditions and through a variety of attenuation materials, including dark glass. APDS-9250 could be configured as Ambient Light Sensor and RGB+IR Sensor.

The color-sensing feature is useful in applications such as LED RGB backlight control, solid-state lighting, reflected LED color sampler and fluorescent light color temperature detection. With the IR sensing feature, the device can be used to read the IR content in certain lighting condition and detect the type of light source.

The integrated IR blocking filter makes this device an excellent ambient light sensor and color temperature monitor sensor together with the temperature compensation that allows output to have less variation over the temperature.

4.6.2 Features

- Colour and Ambient Light Sensing (CS-RGB and ALS)
  - Accuracy of Correlated Color Temperature (CCT)
  - Individual channels for Red, Green, Blue and Infared
  - Approximates Human Eye Response with Green Channel
  - Red, Green, Blue, Infrared and ALS Sensing
  - High Sensitivity in low lux condition – Ideally suited for Operation Behind Dark Glass
  - Wide Dynamic Range: 18,000,000: 1
  - Up to 20-Bit Resolution

- Power Management
  - Low Active Current – 130 µA typical
  - Low Standby Current – 1µA typical
- I^2C-bus Fast Mode Compatible Interface
  - Up to 400 kHz (I^2C Fast-Mode)
  - Dedicated Interrupt Pin
- Small Package L 2.0 × W 2.0 × H 0.65 mm

4.6.3 Block Diagram

Figure 16 - APDS-9250, Block Diagram

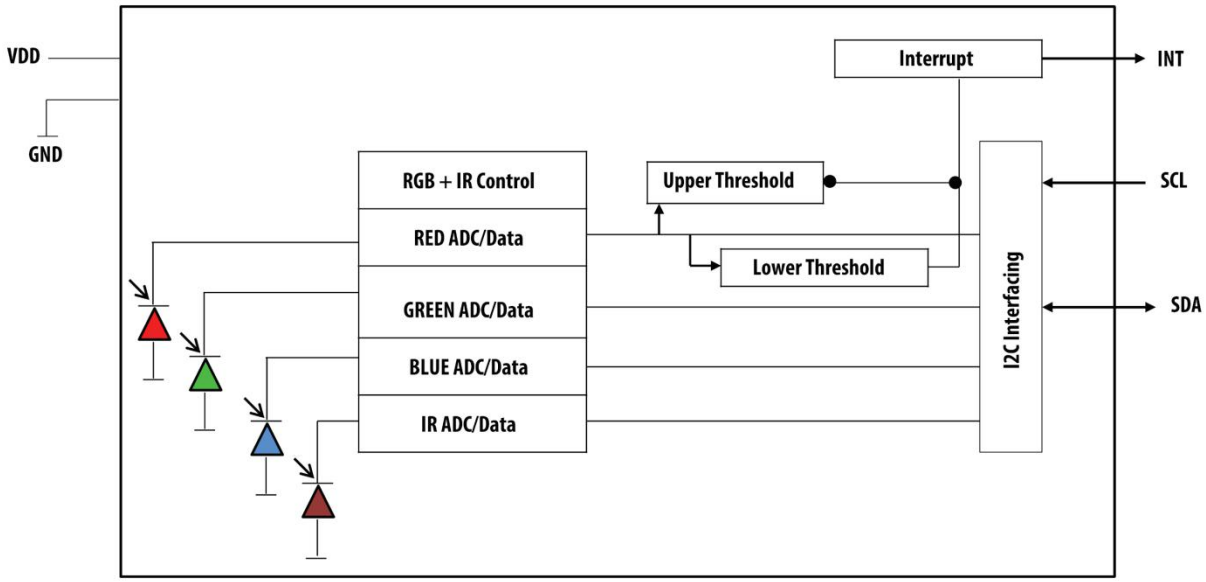

4.6.4 Connections and Signals

Table 7 - APDS-9250, Pin Assignment

Pin#	Name	Function
1	SCL	Clock Signal for I^2C Serial Data
2	SDA	Serial Data I/O for I^2C
3	VDD	Power supply
4	INT	Interrupt - Open Drain
5	NC	No Connect
6	GND	Power Supply Ground

Figure 17 - APDS-9250, Schematic Connections

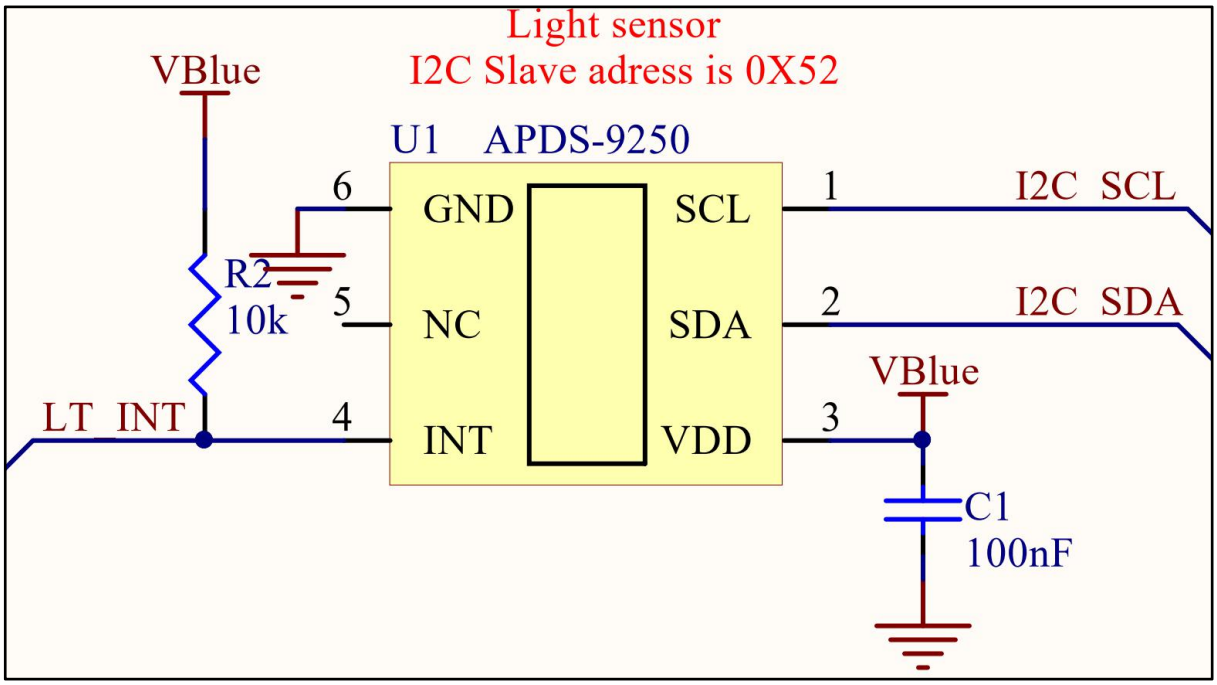

4.7 UV Sensor

4.7.1 General Description

The VEML6075 senses UVA and UVB light and incorporates photodiode, amplifiers, and analog/digital circuits into a single chip using a CMOS process. When the UV sensor is applied, it is able to detect UVA and UVB intensity to provide a measure of the signal strength as well as allowing for UVI measurement.

An accurate VEML6075 UVI sensing system requires visible and infrared noise compensation and a teflon diffusor for cosine angular response correction.

The VEML6075's adoption of Filtron™ UV technology provides the best spectral sensitivity to cover UVA and UVB spectrum sensing. It has excellent temperature compensation and a robust refresh rate setting without the need for an external RC low-pass filter.

The VEML6075 shows linear sensitivity to solar UVA as well as UVB light and its sensitivity can easily be adjusted with selecting the proper integration times.

VEML6075's functionality is easily operated via the simple command format of I^2C (SMBus compatible) interface protocol.

The supply current of this device in activated measuring mode is 500 µA typical, whereas in shut-down mode (SD = 1) it is typically just 800 nA.

The device can be used as a solar UV indicator for cosmetic/outdoor sport handheld products or any kind of consumer products.

4.7.2 Features

- Package type: surface mount
- Dimensions (L x W x H in mm): 2.0 x 1.25 x 1.0
- Integrated modules: ultraviolet sensor (UV), and signal conditioning IC
- Converts solar UV light intensity to digital data
- Excellent UVA and UVB sensitivity
- Reliable performance of UV radiation measurement under long time solar UV exposure
- 16-bit resolution per channel
- UVA and UVB individual channel solution
- Low power consumption I^2C protocol (SMBus compatible) interface
- Package: OPLGA
- Temperature compensation: -40 °C to +85 °C
- Output type: I^2C bus
- Operation voltage: 1.7 V to 3.6 V

4.7.3 Block Diagram

Figure 18 - VEML6075, Block Diagram

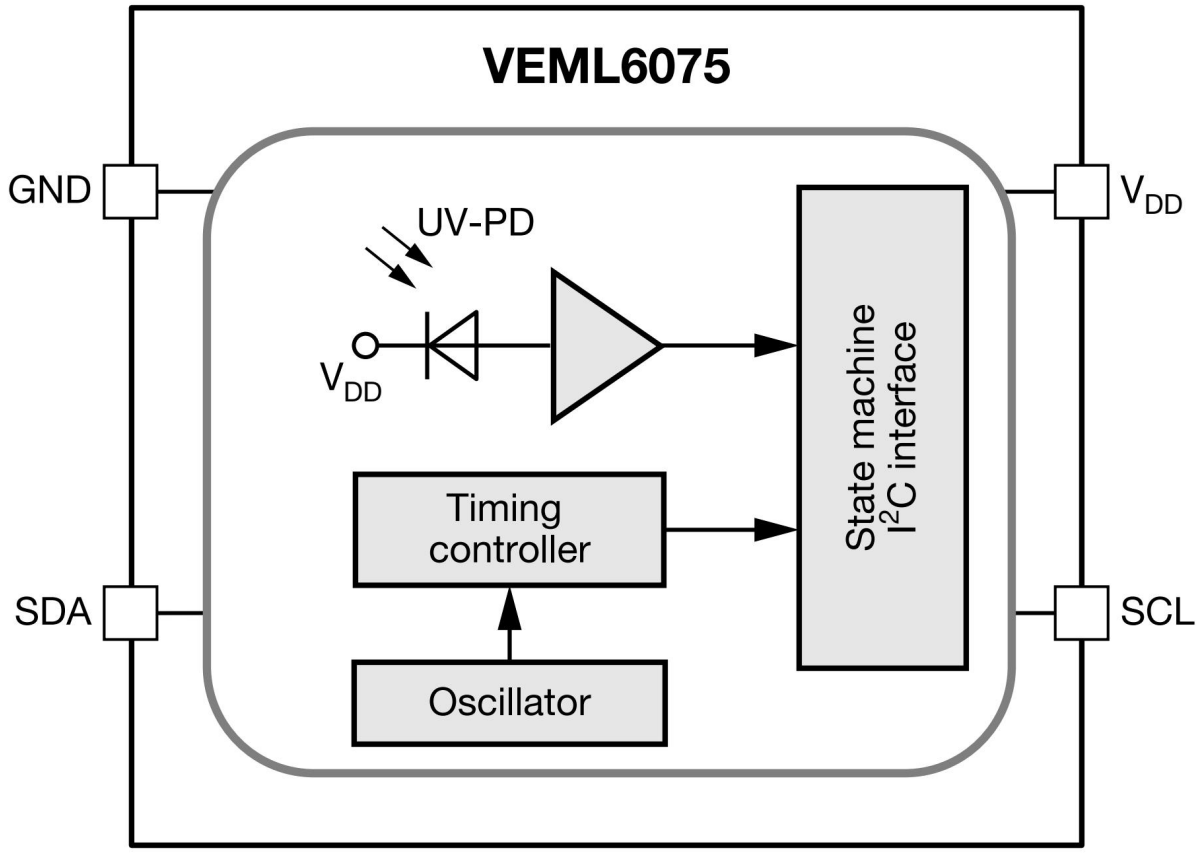

4.7.4 Connections and Signals

Figure 19 - VEML6075, Schematic Connections

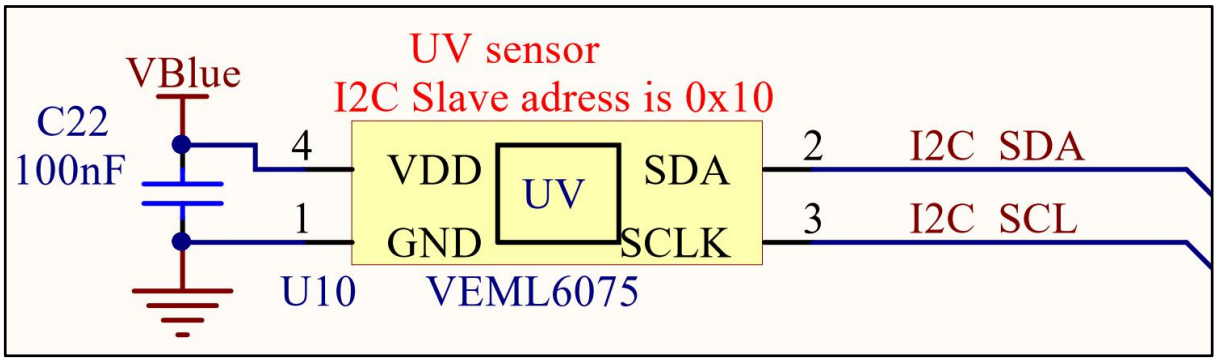

Table 8 - VEML6075, Pin Assignment

Pin#	Name	Function
1	GND	Power Supply Ground
2	SDAT	Serial Data I/O for I^2C
3	SCLK	Clock Signal for I^2C Serial Data
4	VDD	Power supply

5 Serial Flash

5.1 AT25XE041B

5.1.1 Description

The Adesto® AT25XE041B is a serial interface Flash memory device designed for use in a wide variety of high-volume consumer based applications in which program code is shadowed from Flash memory into embedded or external RAM for execution. The flexible erase architecture of the AT25XE041B, with its page erase granularity it is ideal for data storage as well, eliminating the need for additional data storage devices.

The erase block sizes of the AT25XE041B have been optimized to meet the needs of today's code and data storage applications. By optimizing the size of the erase blocks, the memory space can be used much more efficiently. Because certain code modules and data storage segments must reside by themselves in their own erase regions, the wasted and unused memory space that occurs with large sectored and large block erase Flash memory devices can be greatly reduced. This increased memory space efficiency allows additional code routines and data storage segments to be added while still maintaining the same overall device density.

The device also contains a specialized OTP (One-Time Programmable) Security Register that can be used for purposes such as unique device serialization, system-level Electronic Serial Number (ESN) storage, locked key storage, etc.

Specifically designed for use in many different systems, the AT25XE041B supports read, program, and erase operations with a wide supply voltage range of 1.65V to 3.6V. No separate voltage is required for programming and erasing.

5.1.2 Features

- Single 1.65V - 3.6V Supply
- Serial Peripheral Interface (SPI) Compatible
    - Supports SPI Modes 0 and 3
    - Supports Dual-I/O Operation
- 85MHz Maximum Operating Frequency
    - Clock-to-Output (t_V) of 6 ns
- Flexible, Optimized Erase Architecture for Code + Data Storage Applications
    - Small (256-Byte) Page Erase
    - Uniform 4-Kbyte Block Erase
    - Uniform 32-Kbyte Block Erase
    - Uniform 64-Kbyte Block Erase
    - Full Chip Erase

- Hardware Controlled Locking of Protected Sectors via WP Pin
- 128-byte, One-Time Programmable (OTP) Security Register
    - 64 bytes factory programmed with a unique identifier
    - 64 bytes user programmable
- Flexible Programming
    - Byte/Page Program (1 to 256 Bytes)
    - Dual-Input Byte/Page Program (1 to 256 Bytes)
    - Sequential Program Mode Capability
- Fast Program and Erase Times
    - 2ms Typical Page Program (256 Bytes) Time
    - 45ms Typical 4-Kbyte Block Erase Time
    - 360ms Typical 32-Kbyte Block Erase Time
    - 720ms Typical 64-Kbyte Block Erase Time
- Automatic Checking and Reporting of Erase/Program Failures
- Software Controlled Reset
- JEDEC Standard Manufacturer and Device ID Read Methodology
- Low Power Dissipation
    - 200nA Ultra Deep Power Down current (Typical)
    - 5µA Deep Power-Down Current (Typical)
    - 25uA Standby current (Typical)
    - 3.5mA Active Read Current (Typical)
- Endurance: 100,000 Program/Erase Cycles
- Data Retention: 20 Years
- Complies with Full Industrial Temperature Range

5.1.3 Block Diagram

Figure 20 - AT25XE041B, Block Diagram

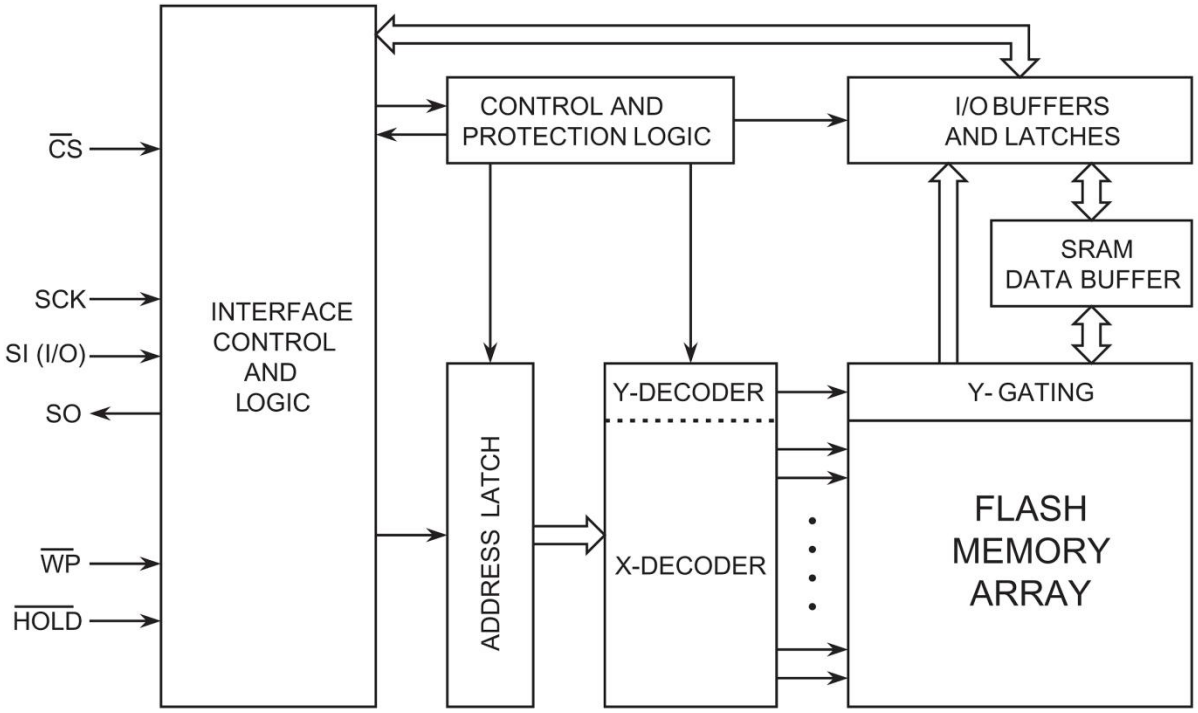

5.1.4 Connections and Signals

Figure 21 - AT25XE041B, Schematic Connections

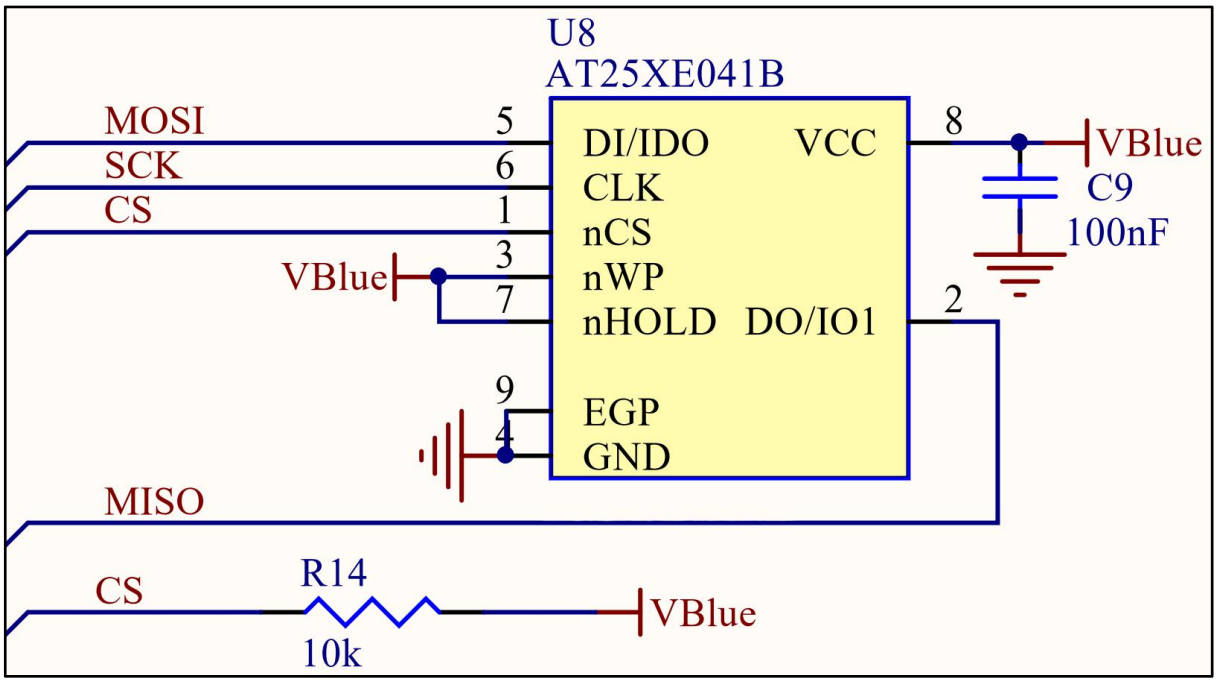

Table 9 - AT25XE041B, Pin Assignment

Pin#	Name	Function
1	CS	SPI Chip Select
2	SO	SPI Serial Data Output
3	WP	Write Protect
4	GND	Ground
5	SI	SPI Serial Data Input
6	SCK	SPI Serial Clock
7	HOLD	Temporarily pause serial communication
8	VCC	Power supply

6 User Interface

6.1 Port Expander

6.1.1 Description

The FXL6408 is a Low-Power, Fully Configurable 8-bit I^2C-controlled GPIO expander.

When configured in Input Mode, the FXL6408 monitors the input ports for data transitions and signals the baseband by asserting the INT pin. The input default values can be programmed independently, allowing customized input detection. All inputs can be configured with pull-up or pull-down resistors to pre-bias the inputs in open-drain or non-driven applications.

When configured in Output Mode, the GPIO pins are capable of delivering 6 mA output drive according to the I^2C register set.

The FXL6408 is designed to allow voltage translation from levels as low as 1.65 V and up to 4.0 V.

The FXL6408 features an active LOW RESET input as well as Power-On Reset (POR) circuit and I^2C software reset options.

6.1.2 Features

- 4X Expansion of Connected Processor I/O Ports
- Fully Integrated I^2C Slave
- 8 Independently Configurable I/O Ports
- Low-Power Quiescent Current: 1.5 μA
- Voltage Translation Capable from 1.65 V I^2C Port Up to 4.0 V GPIO Pins
- Selectable Device Address
- 6 mA Output Drive
- Interrupt Pin to Alert Processor of Status Changes

6.1.3 Block Diagram

Figure 22 - FXL6408, Block Diagram

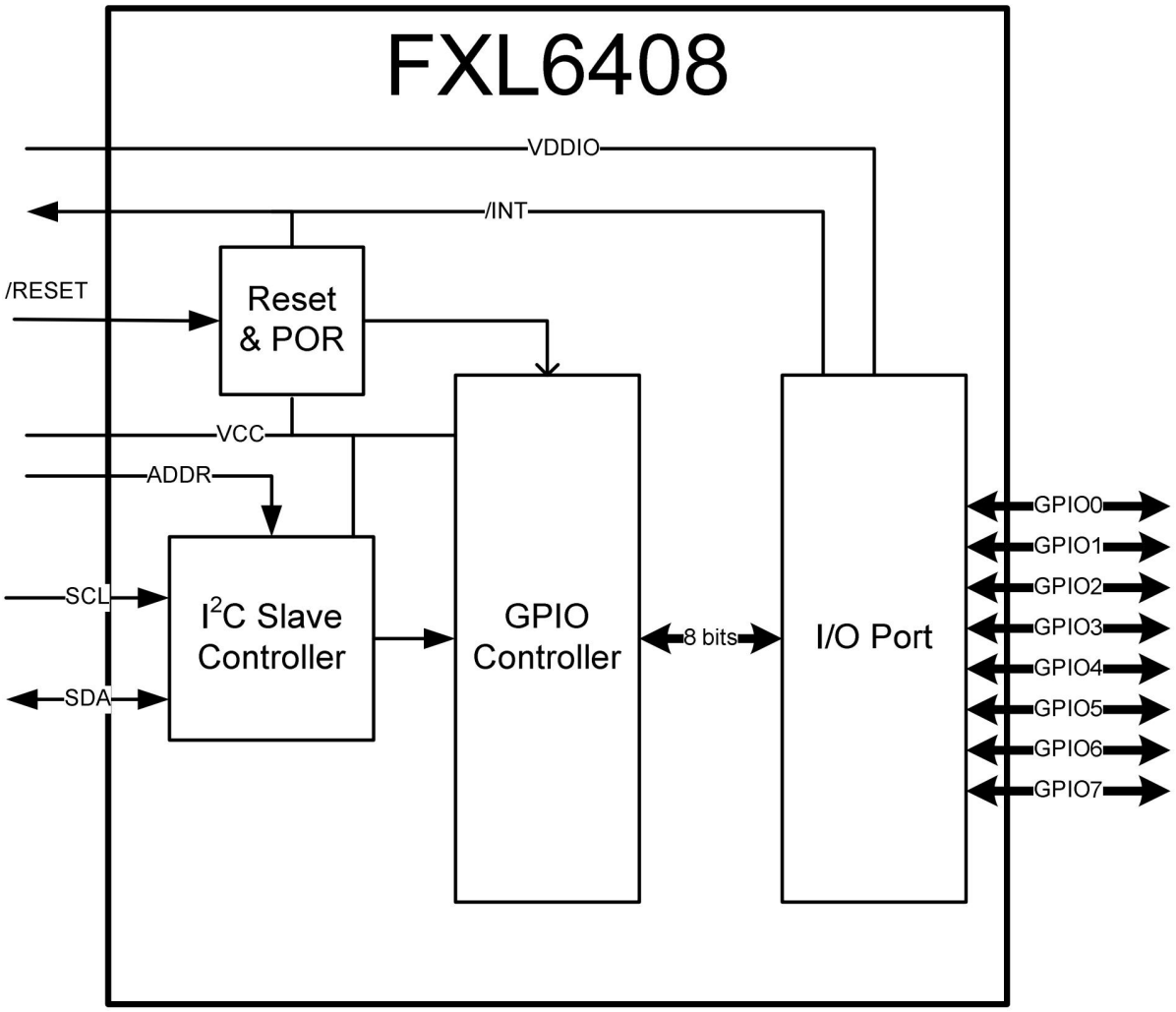

6.1.4 Connections and Signals

Table 10 - FXL6408, Pin Assignment

Pin#	Name	Function
1	INT	Interrupt output, open-drain, active LOW
2	VDD_IO	Voltage reference for I/O pins
3	GPIO7	General-purpose programmable I/O
4	GPIO6	General-purpose programmable I/O
5	GPIO5	General-purpose programmable I/O

6	GPIO4	General-purpose programmable I/O
7	GPIO3	General-purpose programmable I/O
8	GPIO2	General-purpose programmable I/O
9	ADDR	Address input,GND or VCC
10	RST	Reset input, active LOW
11	GPIO1	General-purpose programmable I/O
12	GPIO0	General-purpose programmable I/O
13	SCL	I^2C serial bus
14	SDA	I^2C serial data
15	VCC	Power supply
16	GND	Ground

Figure 23 - FXL6408, Schematic Connections

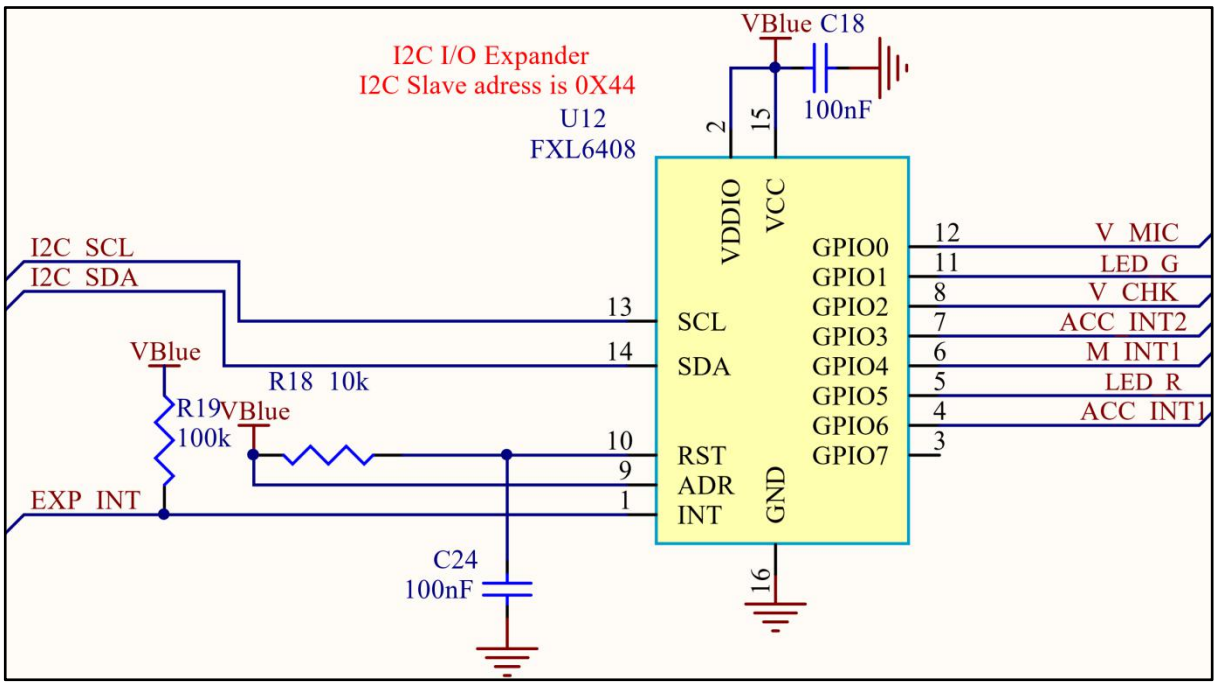

7 Absolute Maximum Characteristics

TBD

8 Operational Characteristics

7.1 Power supplies

There is the various power supply, which can power *Sensi*BLE 2.0:

- Rechargeable Battery (Li-Pol, 0.37Ah, soldered to *Sensi*BLE 2.0 module)
- Micro-USB (via Debugger)
- External Power (4.25V - 6.5V DC)

7.2 Power Consumption

*Sensi*BLE 2.0 Demo has several modes. The average power consumption is shown in the table 10.

Table 11 - *Sensi*BLE 2.0, Power Consumption

#	Mode	Average current, mA*
1	Advertisement mode	0.957
2	Environmental mode	4.41
3	Plot mode	5.11
4	Accelerometer Event mode	4.49
5	Blue Voice mode	6.02

* Power Consumption may be reduced by optimizing software.

9 DC Electrical Characteristics

TBD

10 Environmental Specifications

TBD

11 Mechanical Drawings

11.1 *Sensi*BLE 2.0 Module: SIBA

Dimensions of the *Sensi*BLE 2.0 Module are shown in figures 24 - 25.

Figure 24 - *Sensi*BLE 2.0, Top View [mm]

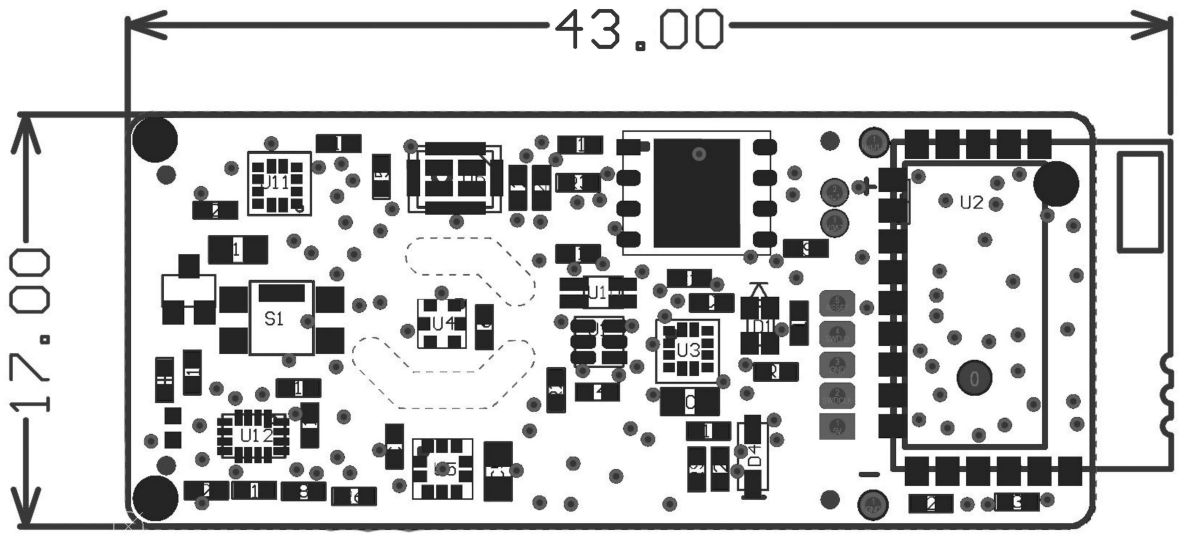

Figure 25 - *Sensi*BLE 2.0, Down View

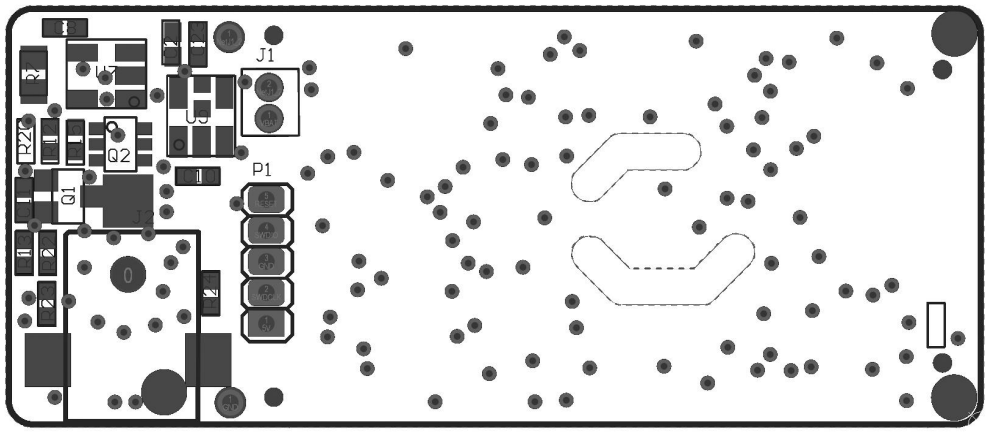

Компания «ЭлектроПласт» предлагает заключение долгосрочных отношений при поставках импортных электронных компонентов на взаимовыгодных условиях!

Наши преимущества:

- Оперативные поставки широкого спектра электронных компонентов отечественного и импортного производства напрямую от производителей и с крупнейших мировых складов;
- Поставка более 17-ти миллионов наименований электронных компонентов;
- Поставка сложных, дефицитных, либо снятых с производства позиций;
- Оперативные сроки поставки под заказ (от 5 рабочих дней);
- Экспресс доставка в любую точку России;
- Техническая поддержка проекта, помощь в подборе аналогов, поставка прототипов;
- Система менеджмента качества сертифицирована по Международному стандарту ISO 9001;
- Лицензия ФСБ на осуществление работ с использованием сведений, составляющих государственную тайну;
- Поставка специализированных компонентов (Xilinx, Altera, Analog Devices, Intersil, Interpoint, Microsemi, Aeroflex, Peregrine, Syfer, Eurofarad, Texas Instrument, Miteq, Cobham, E2V, MA-COM, Hittite, Mini-Circuits,General Dynamics и др.);

Помимо этого, одним из направлений компании «ЭлектроПласт» является направление «Источники питания». Мы предлагаем Вам помощь Конструкторского отдела:

- Подбор оптимального решения, техническое обоснование при выборе компонента;
- Подбор аналогов;
- Консультации по применению компонента;
- Поставка образцов и прототипов;
- Техническая поддержка проекта;
- Защита от снятия компонента с производства.

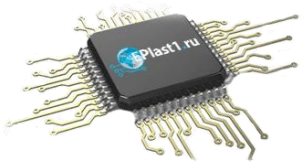

Как с нами связаться

Телефон: 8 (812) 309 58 32 (многоканальный)
Факс: 8 (812) 320-02-42
Электронная почта: org@eplast1.ru
Адрес: 198099, г. Санкт-Петербург, ул. Калинина, дом 2, корпус 4, литера А.