SMT POWER INDUCTORS

Shielded Drum Core - PF0601NL Series

Pulse
A TECHNITROL COMPANY

- **Height:** 3mm Max
- **Footprint:** 6.9mm x 6.5mm Max
- **Current Rating:** up to 2A
- **Inductance Range:** 2.9µH to 330µH
- **260°C reflow peak temperature qualified**

Electrical Specifications @ 25°C — Operating Temperature -40°C to +130°C

Part [2,3] Number	Inductance @0ADC (µH ±20%)	Inductance @Irated (µH TYP)	Irated[5] (A)	DCR (mΩ) MAX	Saturation[6] Current Isat -20% (A)	Heating[7] Current IDC +45°C(A)	Core Loss[8] Factor (K2)	SRF (MHz)
PF0601.292NL	2.9	2.6	2.0	55	2.0	3.3	1500	>40
PF0601.402NL	4.0	3.5	1.63	69	1.63	3.0	1700	>40
PF0601.552NL	5.5	4.8	1.5	75	1.5	2.6	2000	>40
PF0601.103NL	10	8.8	1.1	135	1.1	2.1	2700	31
PF0601.123NL	12	11	1.0	140	1.0	2.0	3100	30
PF0601.153NL	15	13	0.9	155	0.9	1.7	3300	26
PF0601.183NL	18	16	0.8	210	0.8	1.6	3700	23
PF0601.223NL	22	19	0.74	230	0.74	1.5	4000	20
PF0601.273NL	27	24	0.66	305	0.66	1.4	4600	19
PF0601.333NL	33	29	0.59	345	0.59	1.3	4900	17
PF0601.393NL	39	34	0.54	445	0.54	1.2	5500	16
PF0601.473NL	47	41	0.5	515	0.5	1.0	5900	14
PF0601.563NL	56	49	0.46	575	0.46	0.9	6400	13
PF0601.683NL	68	60	0.42	765	0.42	0.85	7200	12
PF0601.823NL	82	72	0.38	840	0.38	0.80	7800	11
PF0601.104NL	100	88	0.34	1120	0.34	0.67	8700	9.0
PF0601.124NL	120	106	0.31	1250	0.31	0.62	9400	8.0
PF0601.154NL	150	132	0.28	1440	0.28	0.60	11000	7.0
PF0601.184NL	180	158	0.26	1920	0.26	0.52	12000	6.5
PF0601.224NL	220	194	0.23	2200	0.23	0.45	13000	6.1
PF0601.274NL	270	238	0.22	3000	0.22	0.40	14000	5.8
PF0601.334NL	330	290	0.19	3300	0.19	0.30	16000	5.1

NOTES FROM TABLE: *(See page 43)*

Mechanical

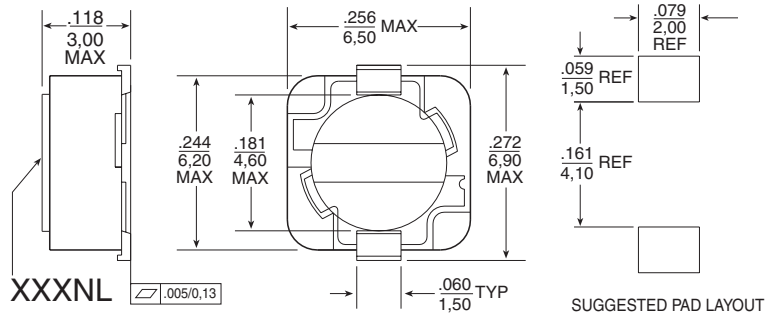

Weight . . . . . .0.35 grams
Tape & Reel 1200/reel

Dimensions: Inches / mm

Unless otherwise specified, all tolerances are ± .004 / 0,10

Schematic

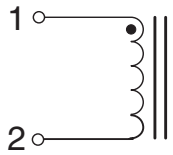

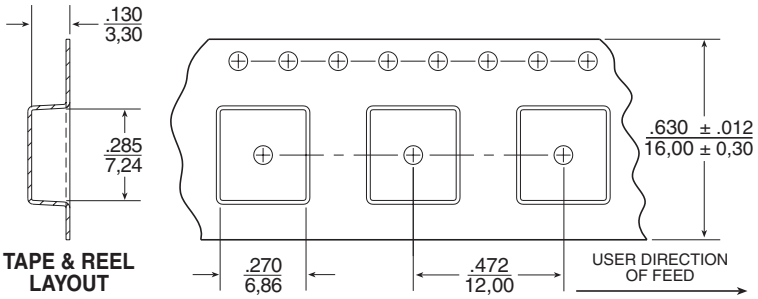

Inductance vs Current Characteristics

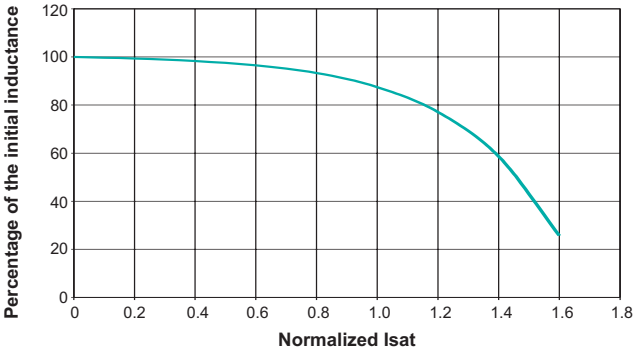

Notes from Tables *(pages 27 - 42)*

1. Unless otherwise specified, all testing is made at 100kHz, 0.1VAC.
2. Optional Tape & Reel packaging can be ordered by adding a "**T**" suffix to the part number (i.e. P1166.102NL becomes P1166.102NL**T**). Pulse complies with industry standard Tape and Tape & Reel specification EIA481.
3. The "**NL**" suffix indicates an RoHS-compliant part number. Non-NL suffixed parts are not necessarily RoHS compliant, but are electrically and mechanically equivalent to NL versions. If a part number does not have the "**NL**" suffix, but an RoHS compliant version is required, please contact Pulse for availability.
4. Temperature of the component (ambient plus temperature rise) must be within specified operating temperature range.
5. The rated current (Irated) as listed is either the saturation current or the heating current depending on which value is lower.
6. The saturation current, Isat, is the current at which the component inductance drops by the indicated percentage (typical) at an ambient temperature of 25°C. This current is determined by placing the component in the specified ambient environment and applying a short duration pulse current (to eliminate self-heating effects) to the component.
7. The heating current, Idc, is the DC current required to raise the component temperature by the indicated delta (approximately). The heating current is determined by mounting the component on a typical PCB and applying current for 30 minutes. The temperature is measured by placing the thermocouple on top of the unit under test.
8. In high volt*time (Et) or ripple current applications, additional heating in the component can occur due to core losses in the inductor which may necessitate derating the current in order to limit the temperature rise of the component. In order to determine the approximate total loss (or temperature rise) for a given application, both copper losses and core losses should be taken into account.

Estimated Temperature Rise:

Trise = [Total loss (mW) / K0]$^{.833}$ (°C)

Total loss = Copper loss + Core loss (mW)

Copper loss = I_{RMS}^2 x DCR (Typical) (mW)

Irms = $[I_{DC}^2 + \Delta I^2/12]^{1/2}$ (A)

Core loss = K1 x f (kHz)$^{1.23}$ x Bac(Ga)$^{2.38}$ (mW)

Bac (peak to peak flux density) = K2 x ΔI (Ga)
[= K2/L(μH) x Et(V-μSec) (Ga)]

where f varies between 25kHz and 1MHz, and Bac is less than 2500 Gauss.

K2 is a core size and winding dependant value and is given for each p/n in the proceeding datasheets.
K0 & K1 are platform and material dependant constants and are given in the table below for each platform.

Part No.	Trise Factor (K0)	Core Loss Factor (K1)
PG0085/86	2.3	5.29E-10
PG0087	5.8	15.2E-10
PG0040/41	0.8	2.80E-10
P1174	0.8	6.47E-10
PF0601	4.6	14.0E-10
PF0464	3.6	24.7E-10
PF0465	3.6	33.4E-10
P1166	1.9	29.6E-10
P1167	2.1	42.2E-10
PF0560NL	5.5	136E-10
P1168/69	4.8	184E-10
P1170/71	4.3	201E-10
P1172/73	5.6	411E-10
PF0552NL	8.3	201E-10
PF0553NL	7.1	411E-10

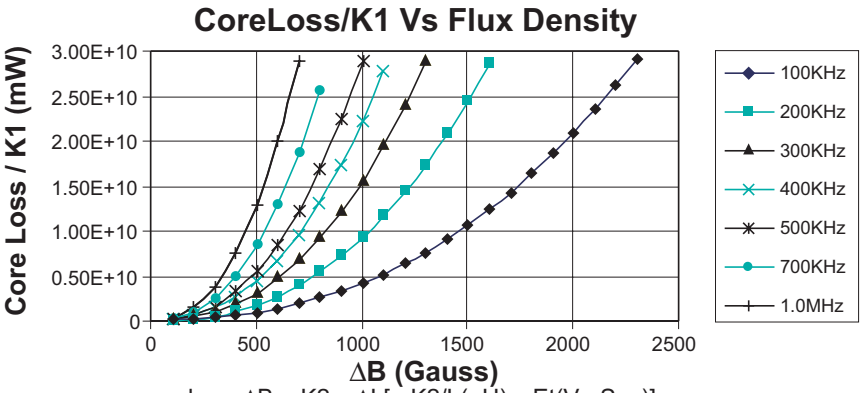

where ΔB = K2 x ΔI [= K2/L(μH) x Et(V-μSec)]

Take note that the component's temperature rise varies depending on the system condition. It is suggested that the component be tested at the system level, to verify the temperature rise of the component during system operation.

Компания «ЭлектроПласт» предлагает заключение долгосрочных отношений при поставках импортных электронных компонентов на взаимовыгодных условиях!

Наши преимущества:

- Оперативные поставки широкого спектра электронных компонентов отечественного и импортного производства напрямую от производителей и с крупнейших мировых складов;
- Поставка более 17-ти миллионов наименований электронных компонентов;
- Поставка сложных, дефицитных, либо снятых с производства позиций;
- Оперативные сроки поставки под заказ (от 5 рабочих дней);
- Экспресс доставка в любую точку России;
- Техническая поддержка проекта, помощь в подборе аналогов, поставка прототипов;
- Система менеджмента качества сертифицирована по Международному стандарту ISO 9001;
- Лицензия ФСБ на осуществление работ с использованием сведений, составляющих государственную тайну;
- Поставка специализированных компонентов (Xilinx, Altera, Analog Devices, Intersil, Interpoint, Microsemi, Aeroflex, Peregrine, Syfer, Eurofarad, Texas Instrument, Miteq, Cobham, E2V, MA-COM, Hittite, Mini-Circuits,General Dynamics и др.);

Помимо этого, одним из направлений компании «ЭлектроПласт» является направление «Источники питания». Мы предлагаем Вам помощь Конструкторского отдела:

- Подбор оптимального решения, техническое обоснование при выборе компонента;
- Подбор аналогов;
- Консультации по применению компонента;
- Поставка образцов и прототипов;
- Техническая поддержка проекта;
- Защита от снятия компонента с производства.

Как с нами связаться

Телефон: 8 (812) 309 58 32 (многоканальный)
Факс: 8 (812) 320-02-42
Электронная почта: org@eplast1.ru
Адрес: 198099, г. Санкт-Петербург, ул. Калинина, дом 2, корпус 4, литера А.