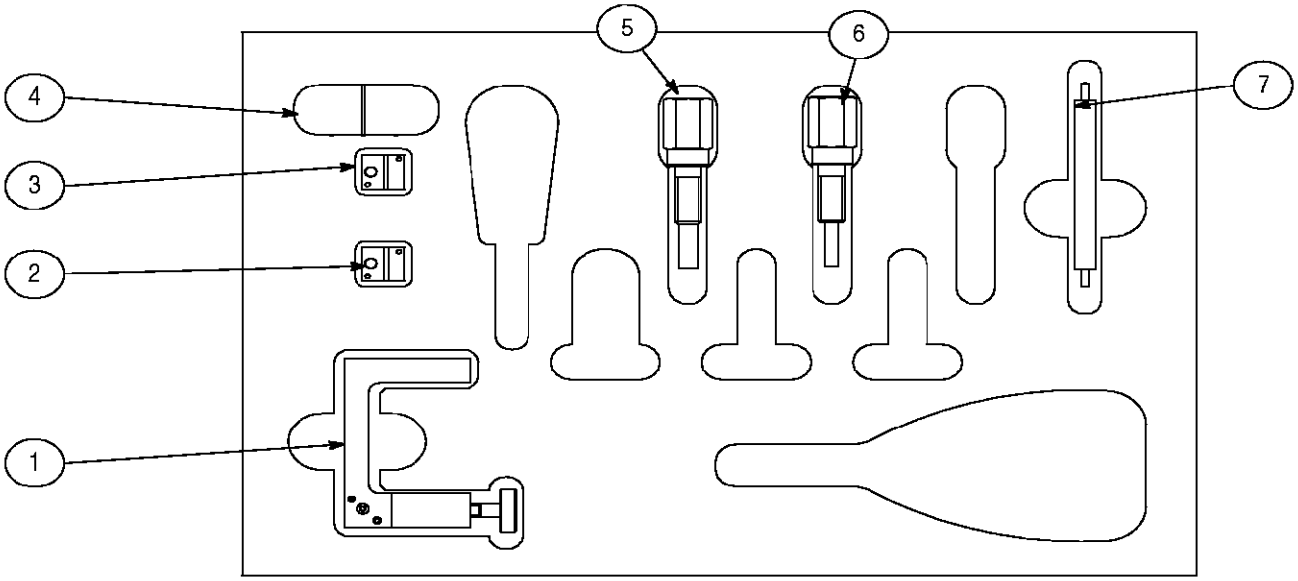

ITEM NUMBER	TYCO ELECTRONICS PART NUMBER	DESCRIPTION	QTY PER KIT
1	1055439–1	Cable Fixture Sub–Assembly	1
2	1055441–1	Clamp Insert for 2.16 [.085] Cable	1 Set
3	1055440–1	Clamp Insert for 3.58 [.141] Cable	1 Set
4	91362–3	0.81 [.032] Thick Solder Gage	1
5	1055477–1	Locator Tool	1
6	1055476–1	Locator Tool	1
7	1055474–1	Center Contact Holder	1

Figure 1

1. INTRODUCTION

Solder Assembly Kit 1055469–1 (see Figure 1) for TNC and BNC Connectors contains everything necessary to solder TNC and BNC solder style connectors to 2.16 [.085] and 3.58 [.141] diameter semi–rigid cable.

CAUTION ***Tool directions in this document are for reference only.*** *Refer to the appropriate connector assembly instructions to insure proper assembly. Refer to Figure 2 for specific TNC solder–style connector assemblies and the associated instruction sheets.*

Note that additional tools may be required for connector assembly. Refer to connector assembly instructions for required tooling.

NOTE *Contact customer service or refer to Catalog 1307191 for additional information.*

NOTE *Dimensions are in metric units [with U.S. customary units in brackets], unless otherwise indicated.*

TNC SOLDER–STYLE CONNECTORS	
Connector Part Number	**Instruction Sheet**
1057679–1	408–4720
1057699–1 1049681–1	408–4722
1057631–1	408–8201
1057697–1	408–8203
1057676–1	408–8205
1313535–1 1060840–1	408–8206
1058565–1 1063038–1	408–8208

Figure 2

©2003 Tyco Electronics Corporation, Harrisburg, PA.
All International Rights Reserved.
AMP and Tyco are trademarks. *Trademark
Other products, logos, and company names used are the property of their respective owners.

2. DESCRIPTION

Solder Assembly Kit 1055469–1 contains the tooling required to properly solder TNC and BNC solder–style connectors to semi–rigid coax cable. The kit contains a cable fixture sub–assembly, two sets of clamp inserts for 2.16 [.085] and 3.58 [.141] cable, and two types of locators that are used to properly align the connector and cable. The kit also contains a solder gage for proper spacing of the center contact, and a center contact holder.

The cable fixture subassembly consists of a fixture frame, thumbscrew, positioning tool and spring. See Figure 3. When used with the proper clamp inserts the assembly holds and locates coaxial cable for soldering.

3. INSTALLING/REPLACING THE CLAMP INSERT

NOTE *Clamp inserts come in sets of two. Upper and lower inserts are interchangeable.*

1. Select the appropriate clamp inserts. Refer to Figure 1 for the appropriate clamp inserts.
2. Remove the cable fixture thumbscrew by rotating it in a counterclockwise direction.
3. Remove the positioning tool by rotating it in a counterclockwise direction.
4. Remove the clamp inserts from the frame after the positioning tool is removed.
5. Sandwich the spring in the pockets on the replacement clamp inserts.
6. Place clamp inserts in the fixture frame and reinstall the positioning tool.
7. Retighten positioning tool.
8. Reinstall the thumbscrew.

4. TRIMMING CABLE WITH FIXTURE FRAME

The fixture frame is equipped with six trimming holes designed to remove the outer jacket and cable dielectric. The side marked with the number 2 is for trimming 1.78 [.070], 2.16 [.085], and 3.58 [.141] cable. See Figures 3 and 5. When cable is fully bottomed during trimming, a strip length of 2.79 [.110] will result. If different strip lengths are required the center conductor must be trimmed separately.

The side marked with a number the number “1” is for trimming cable already mounted in a connector housing. See the connector specific instruction sheet for more information.

NOTE *Trim blades are NOT included with the kit. Use a razor blade with 0.38 [.015] maximum thickness.*

5. USING SOLDER GAGES AND CENTER CONTACT HOLDER

The center contact holder is designed to hold both male and female connector center contacts.

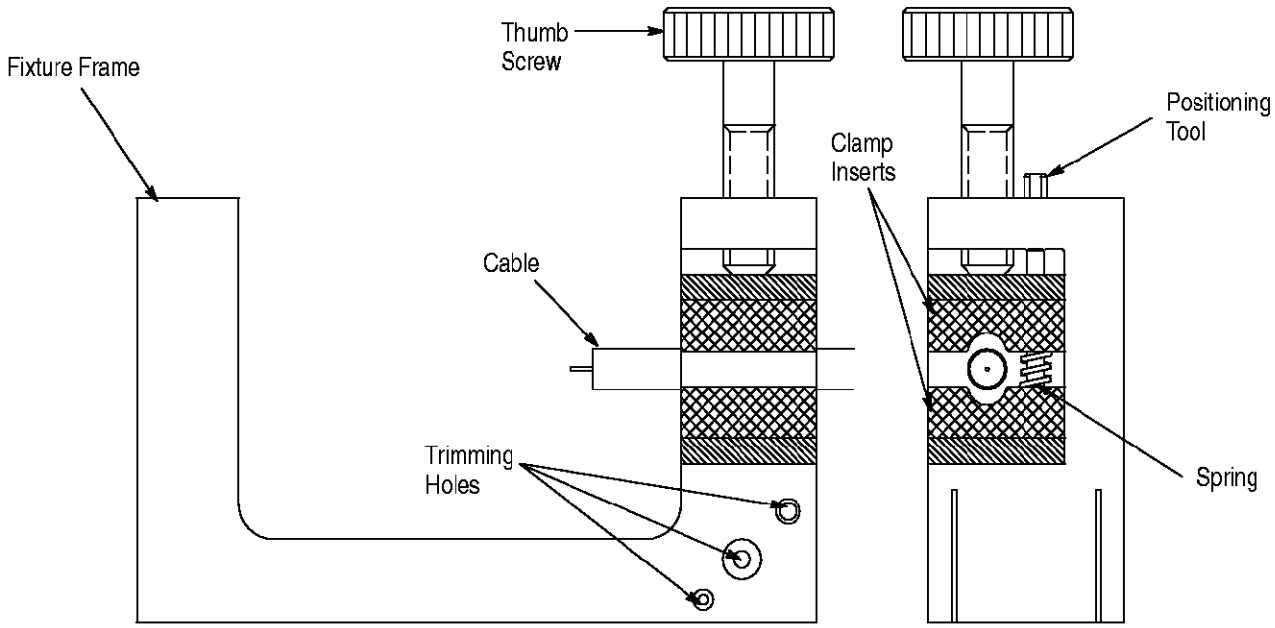

Figure 3

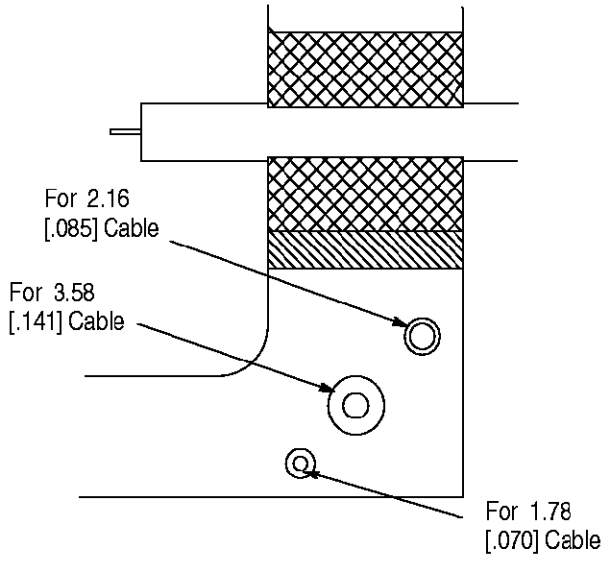

Figure 4

Solder gages are used to properly space the center contact away from the cable dielectric. Refer to the connector specific instruction sheet for the appropriate solder gage to be used during the assembly procedure.

CAUTION *Center contact holders contains small amounts of lead. The lead is used for assembly.*

NOTE *Maximum operating temperature for the center contact holder is 300° C [572° F]*

DANGER *To avoid personal injury, be sure to observe all local safety practices (including the use of gloves). The solder gage, center contact holder, and the contact may be hot after soldering.*

6. USING LOCATING TOOLS

Solder Assembly Kit 1055469–1 contains two locating tools. Refer to the connector specific instruction sheet for selection of proper locator tool and assembly instructions.

These tools are designed to be used with the fixture subassembly. To insure proper connector assembly, follow the instructions listed below.

1. Place connector housing on end of cable sub–assembly. The subassembly refers to cable with center contact.
2. Place loose connector assembly in fixture base.
3. Nest the center contact in locator tool.
4. Tighten the thumbscrew to secure the cable.
5. Tighten the locator tool to seat the cable firmly.
6. Slide connector housing over locator tool.
7. Maintain position of housing firmly against locator tool.

DANGER *To avoid personal injury, be sure to follow all local safety practices when using solder and solder equipment.*

8. Solder according to the connector specific instructions.

NOTE *Fixture should be clamped vertically in vise to keep housing seated against locator tool.*

7. REVISION SUMMARY

Per EC 0990–1873–02

- Initial release of instruction sheet

Компания «ЭлектроПласт» предлагает заключение долгосрочных отношений при поставках импортных электронных компонентов на взаимовыгодных условиях!

Наши преимущества:

- Оперативные поставки широкого спектра электронных компонентов отечественного и импортного производства напрямую от производителей и с крупнейших мировых складов;
- Поставка более 17-ти миллионов наименований электронных компонентов;
- Поставка сложных, дефицитных, либо снятых с производства позиций;
- Оперативные сроки поставки под заказ (от 5 рабочих дней);
- Экспресс доставка в любую точку России;
- Техническая поддержка проекта, помощь в подборе аналогов, поставка прототипов;
- Система менеджмента качества сертифицирована по Международному стандарту ISO 9001;
- Лицензия ФСБ на осуществление работ с использованием сведений, составляющих государственную тайну;
- Поставка специализированных компонентов (Xilinx, Altera, Analog Devices, Intersil, Interpoint, Microsemi, Aeroflex, Peregrine, Syfer, Eurofarad, Texas Instrument, Miteq, Cobham, E2V, MA-COM, Hittite, Mini-Circuits,General Dynamics и др.);

Помимо этого, одним из направлений компании «ЭлектроПласт» является направление «Источники питания». Мы предлагаем Вам помощь Конструкторского отдела:

- Подбор оптимального решения, техническое обоснование при выборе компонента;
- Подбор аналогов;
- Консультации по применению компонента;
- Поставка образцов и прототипов;
- Техническая поддержка проекта;
- Защита от снятия компонента с производства.

Как с нами связаться

Телефон: 8 (812) 309 58 32 (многоканальный)
Факс: 8 (812) 320-02-42
Электронная почта: org@eplast1.ru
Адрес: 198099, г. Санкт-Петербург, ул. Калинина, дом 2, корпус 4, литера А.