Features

- Height of 2.0 mm
- Current rating up to 2.7 A
- RoHS compliant*

Applications

- Input/output of DC/DC converters
- Power supplies for:
  - Portable communication equipment
  - Camcorders
  - LCD TVs

SRR4018 Series - Shielded SMD Power Inductors

Electrical Characteristics

Bourns Part Number	Inductance 100 kHz (μH)	Tol. %	Q Ref.	Test Frequency (MHz)	SRF Typ. (MHz)	DCR Max. (mΩ)	I rms (A)	I sat (A)
SRR4018-1R0Y	1.0	±30	9	7.960	219	35	2.70	2.60
SRR4018-1R8Y	1.8	±30	9	7.960	105	58	2.35	2.20
SRR4018-2R2Y	2.2	±30	8	7.960	90	55	2.10	2.10
SRR4018-2R7Y	2.7	±30	8	7.960	78	60	2.03	1.95
SRR4018-3R3Y	3.3	±30	8	7.960	61	65	1.95	1.80
SRR4018-3R9Y	3.9	±30	8	7.960	60	75	1.82	1.65
SRR4018-4R7Y	4.7	±30	8	7.960	55	82	1.72	1.50
SRR4018-5R6Y	5.6	±30	7	7.960	57	90	1.64	1.25
SRR4018-6R8Y	6.8	±30	8	7.960	49	100	1.50	1.15
SRR4018-8R2Y	8.2	±30	7	7.960	40	135	1.40	1.10
SRR4018-100Y	10	±30	10	2.520	38	150	1.30	1.00
SRR4018-120Y	12	±30	9	2.520	32	170	1.15	0.90
SRR4018-150Y	15	±30	8	2.520	30	220	1.03	0.82
SRR4018-180Y	18	±30	7	2.520	30	280	0.92	0.75
SRR4018-220Y	22	±30	7	2.520	29	300	0.88	0.65
SRR4018-270Y	27	±30	7	2.520	23	370	0.77	0.60
SRR4018-330Y	33	±30	7	2.520	21	420	0.73	0.50
SRR4018-390Y	39	±30	8	2.520	19	540	0.64	0.48
SRR4018-470Y	47	±30	8	2.520	20	600	0.62	0.45
SRR4018-560Y	56	±30	8	2.520	15	820	0.52	0.40
SRR4018-680Y	68	±30	7	2.520	13	860	0.50	0.38
SRR4018-820Y	82	±30	8	2.520	13	1200	0.43	0.32
SRR4018-101Y	100	±30	10	0.796	12	1350	0.40	0.30
SRR4018-121Y	120	±30	11	0.796	10	1950	0.33	0.28
SRR4018-151Y	150	±30	14	0.796	10	2600	0.28	0.26
SRR4018-181Y	180	±30	10	0.796	10	4000	0.18	0.25

Inductance vs. Current

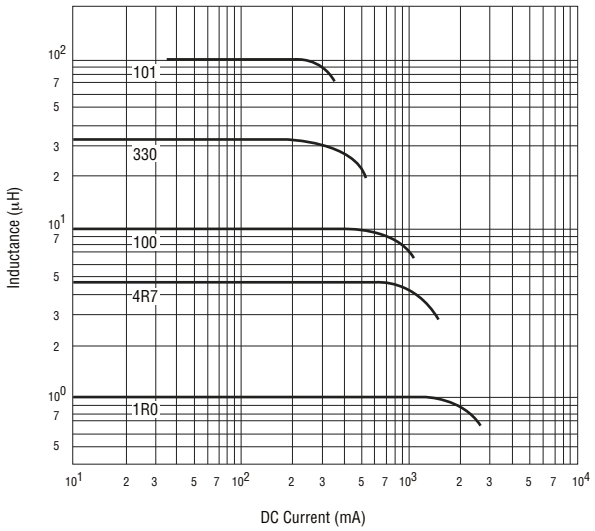

General Specifications

Test Voltage ..... 0.1 V
Reflow Soldering ...230 °C, 50 sec. max.
Operating Temp. .....-40 °C to +125 °C
(Temperature rise included)
Storage Temperature.. -40 °C to +125 °C
Resistance to Soldering Heat
..... 260 °C for 10 sec.
Moisture Sensitivity Level.....1
ESD Classification (HBM).....N/A

Materials

Core ..... Ferrite
Wire ..... Enameled copper
Adhesive.....Epoxy resin
Terminal..... Ag/Ni/Sn
Rated Current
.....Ind. drop 35 % typ. at Isat
Temperature Rise..... 30 °C typ.
at rated Irms
Packaging..... 800 pcs. per reel

Product Dimensions

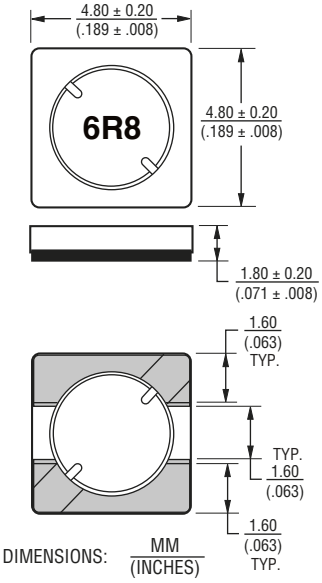

Recommended Layout

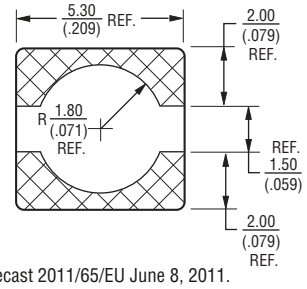

WARNING Cancer and Reproductive Harm
www.P65Warnings.ca.gov

*RoHS Directive 2002/95/EC Jan. 27, 2003 including annex and RoHS Recast 2011/65/EU June 8, 2011.

Specifications are subject to change without notice. Users should verify actual device performance in their specific applications. The products described herein and this document are subject to specific legal disclaimers as set forth on the last page of this document, and at www.bourns.com/docs/legal/disclaimer.pdf.

Soldering Profile

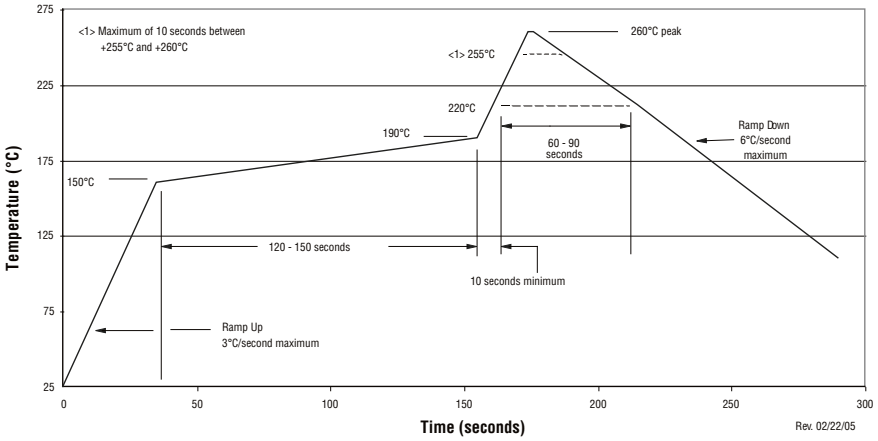

Electrical Schematic

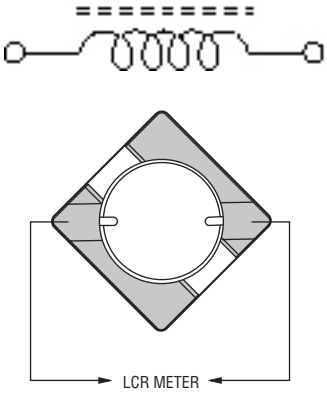

Packaging Specifications

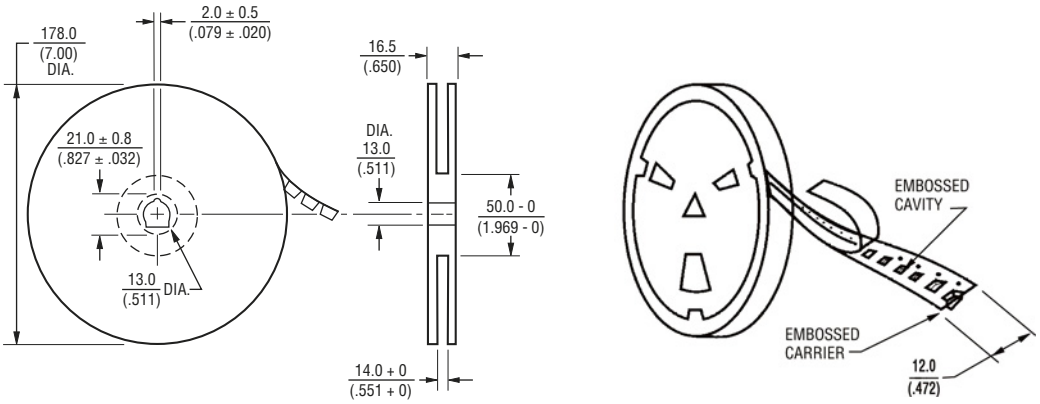

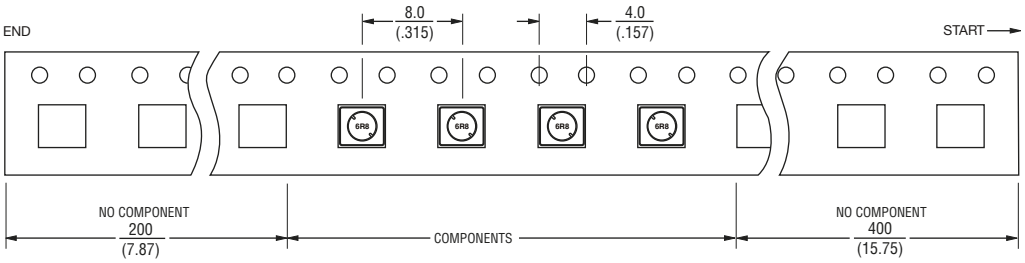

USER DIRECTION OF FEED

QTY: 800 PCS. PER REEL

DIMENSIONS: MM (INCHES)

Specifications are subject to change without notice.
Users should verify actual device performance in their specific applications.
The products described herein and this document are subject to specific legal disclaimers as set forth on the last page of this document, and at www.bourns.com/docs/legal/disclaimer.pdf.

Legal Disclaimer Notice

BOURNS®

This legal disclaimer applies to purchasers and users of Bourns® products manufactured by or on behalf of Bourns, Inc. and its affiliates (collectively, "Bourns").

Unless otherwise expressly indicated in writing, Bourns® products and data sheets relating thereto are subject to change without notice. Users should check for and obtain the latest relevant information and verify that such information is current and complete before placing orders for Bourns® products.

The characteristics and parameters of a Bourns® product set forth in its data sheet are based on laboratory conditions, and statements regarding the suitability of products for certain types of applications are based on Bourns' knowledge of typical requirements in generic applications. The characteristics and parameters of a Bourns® product in a user application may vary from the data sheet characteristics and parameters due to (i) the combination of the Bourns® product with other components in the user's application, or (ii) the environment of the user application itself. The characteristics and parameters of a Bourns® product also can and do vary in different applications and actual performance may vary over time. Users should always verify the actual performance of the Bourns® product in their specific devices and applications, and make their own independent judgments regarding the amount of additional test margin to design into their device or application to compensate for differences between laboratory and real world conditions.

Unless Bourns has explicitly designated an individual Bourns® product as meeting the requirements of a particular industry standard (e.g., ISO/TS 16949) or a particular qualification (e.g., UL listed or recognized), Bourns is not responsible for any failure of an individual Bourns® product to meet the requirements of such industry standard or particular qualification. Users of Bourns® products are responsible for ensuring compliance with safety-related requirements and standards applicable to their devices or applications.

Bourns® products are not recommended, authorized or intended for use in nuclear, lifesaving, life-critical or life-sustaining applications, nor in any other applications where failure or malfunction may result in personal injury, death, or severe property or environmental damage. Unless expressly and specifically approved in writing by two authorized Bourns representatives on a case-by-case basis, use of any Bourns® products in such unauthorized applications might not be safe and thus is at the user's sole risk. Life-critical applications include devices identified by the U.S. Food and Drug Administration as Class III devices and generally equivalent classifications outside of the United States.

Bourns expressly identifies those Bourns® standard products that are suitable for use in automotive applications on such products' data sheets in the section entitled "Applications." Unless expressly and specifically approved in writing by two authorized Bourns representatives on a case-by-case basis, use of any other Bourns® standard products in an automotive application might not be safe and thus is not recommended, authorized or intended and is at the user's sole risk. If Bourns expressly identifies a sub-category of automotive application in the data sheet for its standard products (such as infotainment or lighting), such identification means that Bourns has reviewed its standard product and has determined that if such Bourns® standard product is considered for potential use in automotive applications, it should only be used in such sub-category of automotive applications. Any reference to Bourns® standard product in the data sheet as compliant with the AEC-Q standard or "automotive grade" does not by itself mean that Bourns has approved such product for use in an automotive application.

Bourns® standard products are not tested to comply with United States Federal Aviation Administration standards generally or any other generally equivalent governmental organization standard applicable to products designed or manufactured for use in aircraft or space applications. Bourns expressly identifies Bourns® standard products that are suitable for use in aircraft or space applications on such products' data sheets in the section entitled "Applications." Unless expressly and specifically approved in writing by two authorized Bourns representatives on a case-by-case basis, use of any other Bourns® standard product in an aircraft or space application might not be safe and thus is not recommended, authorized or intended and is at the user's sole risk.

The use and level of testing applicable to Bourns® custom products shall be negotiated on a case-by-case basis by Bourns and the user for which such Bourns® custom products are specially designed. Absent a written agreement between Bourns and the user regarding the use and level of such testing, the above provisions applicable to Bourns® standard products shall also apply to such Bourns® custom products.

Users shall not sell, transfer, export or re-export any Bourns® products or technology for use in activities which involve the design, development, production, use or stockpiling of nuclear, chemical or biological weapons or missiles, nor shall they use Bourns® products or technology in any facility which engages in activities relating to such devices. The foregoing restrictions apply to all uses and applications that violate national or international prohibitions, including embargos or international regulations. Further, Bourns® products and Bourns technology and technical data may not under any circumstance be exported or re-exported to countries subject to international sanctions or embargoes. Bourns® products may not, without prior authorization from Bourns and/or the U.S. Government, be resold, transferred, or re-exported to any party not eligible to receive U.S. commodities, software, and technical data.

To the maximum extent permitted by applicable law, Bourns disclaims (i) any and all liability for special, punitive, consequential, incidental or indirect damages or lost revenues or lost profits, and (ii) any and all implied warranties, including implied warranties of fitness for particular purpose, non-infringement and merchantability.

For your convenience, copies of this Legal Disclaimer Notice with German, Spanish, Japanese, Traditional Chinese and Simplified Chinese bilingual versions are available at:

Web Page: http://www.bourns.com/legal/disclaimers-terms-and-policies

PDF: http://www.bourns.com/docs/Legal/disclaimer.pdf

Компания «ЭлектроПласт» предлагает заключение долгосрочных отношений при поставках импортных электронных компонентов на взаимовыгодных условиях!

Наши преимущества:

- Оперативные поставки широкого спектра электронных компонентов отечественного и импортного производства напрямую от производителей и с крупнейших мировых складов;
- Поставка более 17-ти миллионов наименований электронных компонентов;
- Поставка сложных, дефицитных, либо снятых с производства позиций;
- Оперативные сроки поставки под заказ (от 5 рабочих дней);
- Экспресс доставка в любую точку России;
- Техническая поддержка проекта, помощь в подборе аналогов, поставка прототипов;
- Система менеджмента качества сертифицирована по Международному стандарту ISO 9001;
- Лицензия ФСБ на осуществление работ с использованием сведений, составляющих государственную тайну;
- Поставка специализированных компонентов (Xilinx, Altera, Analog Devices, Intersil, Interpoint, Microsemi, Aeroflex, Peregrine, Syfer, Eurofarad, Texas Instrument, Miteq, Cobham, E2V, MA-COM, Hittite, Mini-Circuits,General Dynamics и др.);

Помимо этого, одним из направлений компании «ЭлектроПласт» является направление «Источники питания». Мы предлагаем Вам помощь Конструкторского отдела:

- Подбор оптимального решения, техническое обоснование при выборе компонента;
- Подбор аналогов;
- Консультации по применению компонента;
- Поставка образцов и прототипов;
- Техническая поддержка проекта;
- Защита от снятия компонента с производства.

Как с нами связаться

Телефон: 8 (812) 309 58 32 (многоканальный)
Факс: 8 (812) 320-02-42
Электронная почта: org@eplast1.ru
Адрес: 198099, г. Санкт-Петербург, ул. Калинина, дом 2, корпус 4, литера А.