Micro Commercial Components

Micro Commercial Components
20736 Marilla Street Chatsworth
CA 91311
Phone: (818) 701-4933
Fax: (818) 701-4939

BAS19 THRU BAS21

Small Signal Diodes 250mW

Features

- Ideally Suited for Automatic Insertion
- 150°C Junction Temperature
- Fast Switching speed
- Epitaxial Planar Die Construction
- Lead Free Finish/Rohs Compliant ("P"Suffix designates RoHS Compliant. See ordering information)
- Halogen free available upon request by adding suffix "-HF"

Mechanical Data

- Epoxy meets UL 94 V-0 flammability rating
- Moisture Sensitivity Level 1
- Weight: 0.008 grams (approx.)

MCC Part Number	Marking	Continuous Reverse Voltage V_R (V)	Repetitive Peak Reverse Voltage V_{RRM} (V)
BAS19	JP	100	120
BAS20	JR	150	200
BAS21	JS	200	250

Maximum Ratings @ 25°C Unless Otherwise Specified

Parameter	Symbol	Value	Unit
Non-repetitive Peak Forward Surge Current @ t=1us @ t=1s	I_{FSM}	2.5 0.5	A
Average Rectified Forward Current	$I_{F(AV)}$	200(1)	mA
Forward DC Current at T_{amb}=25°C	I_F	200(2)	mA
Repetitive Peak Forward Current	I_{FRM}	625	mA
Power Dissipation up to T_{amb}=25°C	P_{tot}	250	mW
Thermal Resistance Junction to Ambient	$R_{\theta JA}$	430	°C/W
Operating & Storage Temperature	T_j, T_{STG}	-65~150	°C

Notes: (1) Measured under pulse conditions;
Pulse time = t_p <= 0.3ms
(2) Device on fiberglass substrate,
See layout on next page

SOT-23

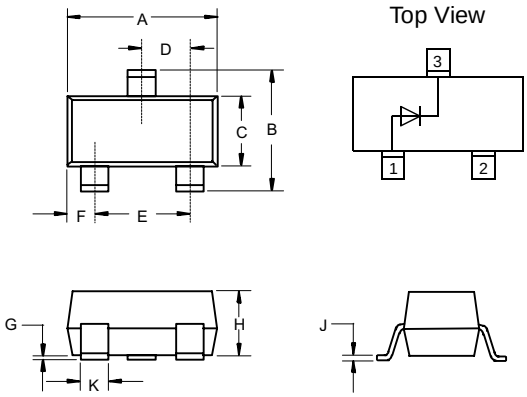

DIMENSIONS					
	INCHES		MM		
DIM	MIN	MAX	MIN	MAX	NOTE
A	.110	.120	2.80	3.04	
B	.083	.098	2.10	2.64	
C	.047	.055	1.20	1.40	
D	.035	.041	.89	1.03	
E	.070	.081	1.78	2.05	
F	.018	.024	.45	.60	
G	.0005	.0039	.013	.100	
H	.035	.044	.89	1.12	
J	.003	.007	.085	.180	
K	.015	.020	.37	.51	

Suggested Solder Pad Layout

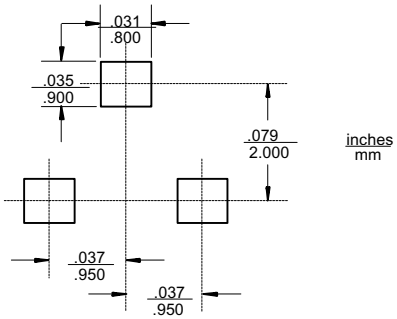

Electrical Characteristics

(T_J = 25°C unless otherwise noted)

Parameter	Symbol	Test Condition	Min	Typ	Max	Unit
Forward Voltage	V_F	I_F = 100mA I_F = 200mA	— —	— —	1.0 1.25	V V
Leakage Current	I_R	$V_R = V_{Rmax}$ $V_R = V_{Rmax}$; T_j = 150°C	— —	— —	100 100	nA µA
Dynamic Forward Resistance	r_f	I_F = 10mA	—	5	—	Ω
Capacitance	C_{tot}	V_R = 0 f = 1MHz	—	—	5	pF
Reverse Recovery Time (see figures)	t_{rr}	I_F = 30mA, I_R = 30mA I_{rr} = 3mA, R_L = 100Ω	—	—	50	ns

(1)Device on fiberglass substrate, see layout (SOT-23).

Test Circuit and Waveforms (BAS19, BAS20, BAS21)

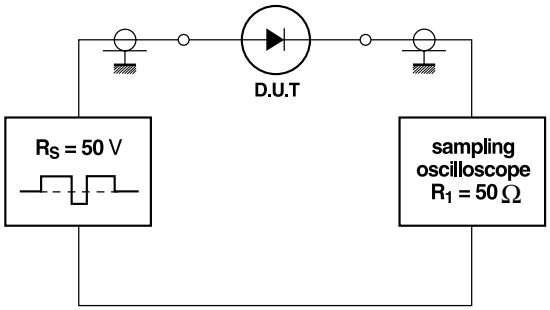

Test circuit

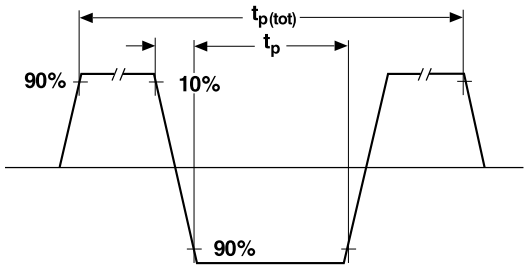

Input signal

Input Signal	- total pulse duration - duty factor - rise time of reverse pulse - reverse pulse duration	tp(tot) = 2µs δ = 0.0025 t_r = 0.6ns t_p = 100ns
Oscilloscope	- rise time - cicuit capitance*	t_r = 0.35ns C < 1pF

*C = oscilloscope input capactitance + parasitic capacitance

Waveforms; IR = 3 mA

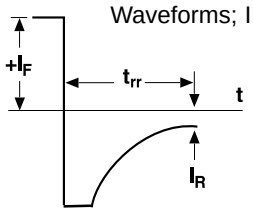

Output signal

Layout for $R_{\Theta JA}$ test

Thickness: Fiberglass 0.059 in. (1.5 mm)
Copper leads 0.012 in. (0.3 mm)

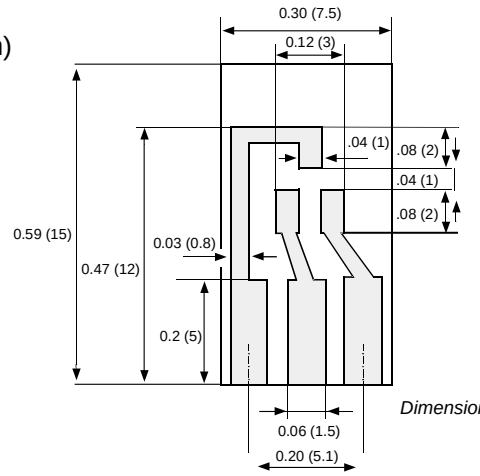

Dimensions in inches (millimeters)

Micro Commercial Components

Ordering Information :

Device	Packing
Part Number-TP	Tape&Reel: 3Kpcs/Reel

Note : Adding "-HF" suffix for halogen free, eg. Part Number-TP-HF

*****IMPORTANT NOTICE*****

Micro Commercial Components Corp. reserves the right to make changes without further notice to any product herein to make corrections, modifications , enhancements , improvements , or other changes . ***Micro Commercial Components Corp .*** does not assume any liability arising out of the application or use of any product described herein; neither does it convey any license under its patent rights ,nor the rights of others . The user of products in such applications shall assume all risks of such use and will agree to hold ***Micro Commercial Components Corp .*** and all the companies whose products are represented on our website, harmless against all damages.

*****LIFE SUPPORT*****

MCC's products are not authorized for use as critical components in life support devices or systems without the express written approval of Micro Commercial Components Corporation.

*****CUSTOMER AWARENESS*****

Counterfeiting of semiconductor parts is a growing problem in the industry. Micro Commercial Components (MCC) is taking strong measures to protect ourselves and our customers from the proliferation of counterfeit parts. MCC strongly encourages customers to purchase MCC parts either directly from MCC or from Authorized MCC Distributors who are listed by country on our web page cited below. Products customers buy either from MCC directly or from Authorized MCC Distributors are genuine parts, have full traceability, meet MCC's quality standards for handling and storage. **MCC will not provide any warranty coverage or other assistance for parts bought from Unauthorized Sources.** MCC is committed to combat this global problem and encourage our customers to do their part in stopping this practice by buying direct or from authorized distributors.

Компания «ЭлектроПласт» предлагает заключение долгосрочных отношений при поставках импортных электронных компонентов на взаимовыгодных условиях!

Наши преимущества:

- Оперативные поставки широкого спектра электронных компонентов отечественного и импортного производства напрямую от производителей и с крупнейших мировых складов;
- Поставка более 17-ти миллионов наименований электронных компонентов;
- Поставка сложных, дефицитных, либо снятых с производства позиций;
- Оперативные сроки поставки под заказ (от 5 рабочих дней);
- Экспресс доставка в любую точку России;
- Техническая поддержка проекта, помощь в подборе аналогов, поставка прототипов;
- Система менеджмента качества сертифицирована по Международному стандарту ISO 9001;
- Лицензия ФСБ на осуществление работ с использованием сведений, составляющих государственную тайну;
- Поставка специализированных компонентов (Xilinx, Altera, Analog Devices, Intersil, Interpoint, Microsemi, Aeroflex, Peregrine, Syfer, Eurofarad, Texas Instrument, Miteq, Cobham, E2V, MA-COM, Hittite, Mini-Circuits,General Dynamics и др.);

Помимо этого, одним из направлений компании «ЭлектроПласт» является направление «Источники питания». Мы предлагаем Вам помощь Конструкторского отдела:

- Подбор оптимального решения, техническое обоснование при выборе компонента;
- Подбор аналогов;
- Консультации по применению компонента;
- Поставка образцов и прототипов;
- Техническая поддержка проекта;
- Защита от снятия компонента с производства.

Как с нами связаться

Телефон: 8 (812) 309 58 32 (многоканальный)
Факс: 8 (812) 320-02-42
Электронная почта: org@eplast1.ru
Адрес: 198099, г. Санкт-Петербург, ул. Калинина, дом 2, корпус 4, литера А.