PIC16C9XX

8-Bit CMOS Microcontroller with LCD Driver

Devices included in this data sheet:

- PIC16C923
- PIC16C924

Microcontroller Core Features:

- High performance RISC CPU
- Only 35 single word instructions to learn
- 4K x 14 on-chip EPROM program memory
- 176 x 8 general purpose registers (SRAM)
- All single cycle instructions (500 ns) except for program branches which are two-cycle
- Operating speed: DC - 8 MHz clock input
  DC - 500 ns instruction cycle
- Interrupt capability
- Eight level deep hardware stack
- Direct, indirect and relative addressing modes

Peripheral Features:

- 25 I/O pins with individual direction control
- 25-27 input only pins
- Timer0: 8-bit timer/counter with 8-bit prescaler
- Timer1: 16-bit timer/counter, can be incremented during sleep via external crystal/clock
- Timer2: 8-bit timer/counter with 8-bit period register, prescaler and postscaler
- One pin that can be configured a capture input, PWM output, or compare output
  - Capture is 16-bit, max. resolution 31.25 ns
  - Compare is 16-bit, max. resolution 500 ns
  - PWM max resolution is 10-bits.
    Maximum PWM frequency @ 8-bit resolution = 32 kHz, @ 10-bit resolution = 8 kHz
- Programmable LCD timing module
  - Multiple LCD timing sources available
  - Can drive LCD panel while in Sleep mode
  - Static, 1/2, 1/3, 1/4 multiplex
  - Static drive and 1/3 bias capability
  - 16 bytes of dedicated LCD RAM
  - Up to 32 segments, up to 4 commons

Common	Segment	Pixels
1	32	32
2	31	62
3	30	90
4	29	116

Available in Die Form

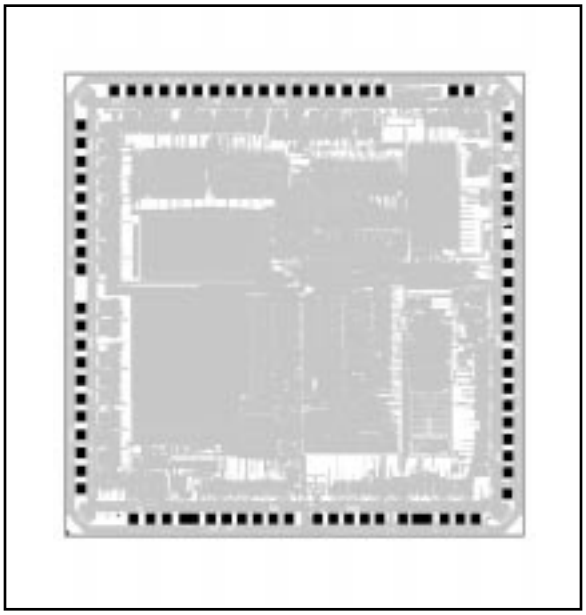

- Synchronous Serial Port (SSP) with SPI™ and I²C™
- 8-bit multi-channel Analog to Digital converter (PIC16C924 only)

Special Microcontroller Features:

- Power-on Reset (POR)
- Power-up Timer (PWRT) and Oscillator Start-up Timer (OST)
- Watchdog Timer (WDT) with its own on-chip RC oscillator for reliable operation
- Programmable code-protection
- Power saving SLEEP mode
- Selectable oscillator options
- In-Circuit Serial Programming™ (via two pins)

CMOS Technology

- Low-power, high-speed CMOS EPROM technology
- Fully static design
- Wide operating voltage range: 2.5V to 6.0V
- Commercial and Industrial temperature ranges
- Low-power consumption:
  - < 2 mA @ 5.5V, 4 MHz
  - 22.5 µA typical @ 4V, 32 kHz
  - < 1 µA typical standby current @ 3.0V

ICSP is a trademark of Microchip Technology Inc. I²C is a trademark of Philips Corporation. SPI is a trademark of Motorola Corporation.

© 1997 Microchip Technology Inc.

Pin Diagrams

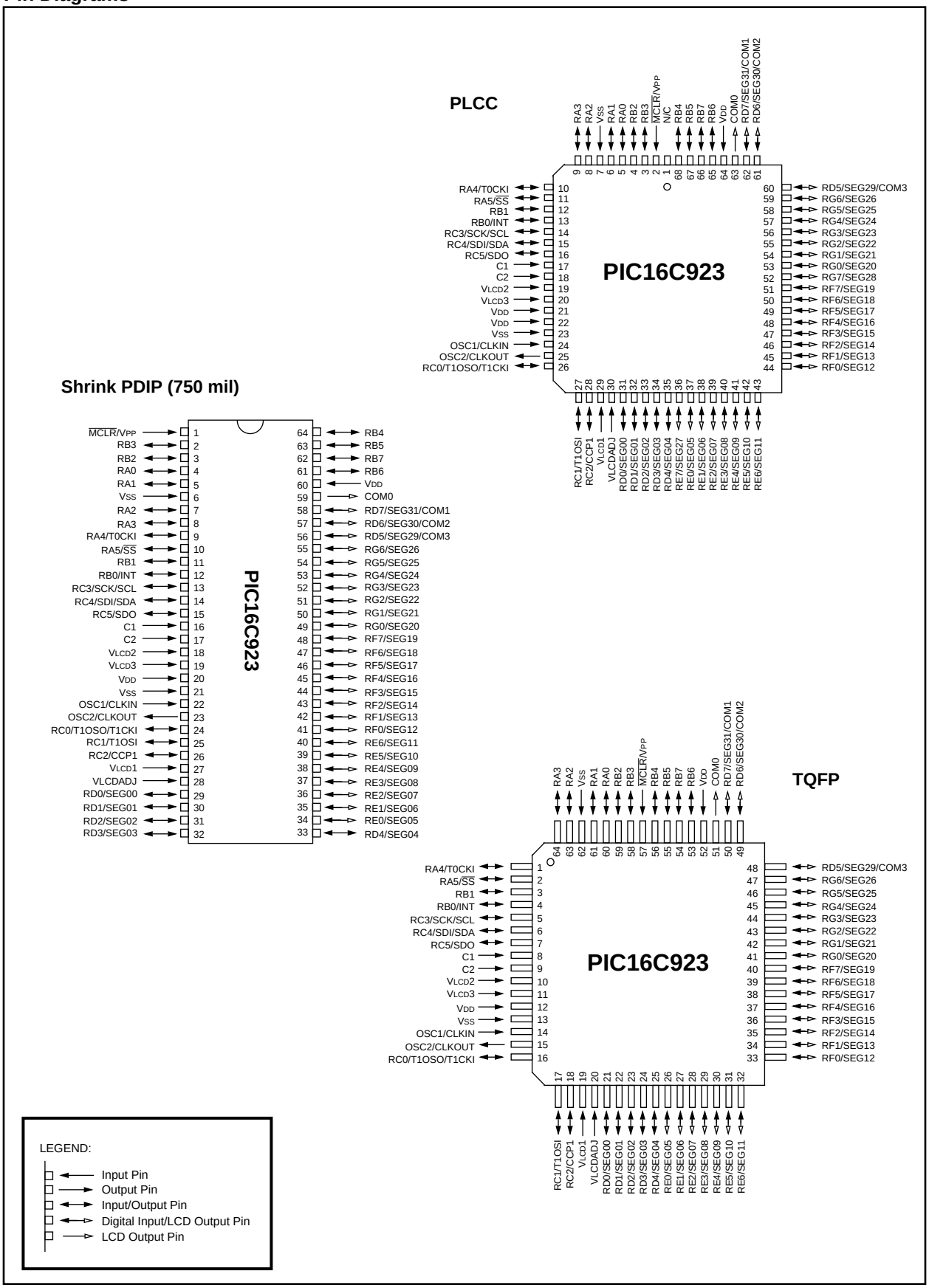

© 1997 Microchip Technology Inc.

Pin Diagrams (Cont.'d)

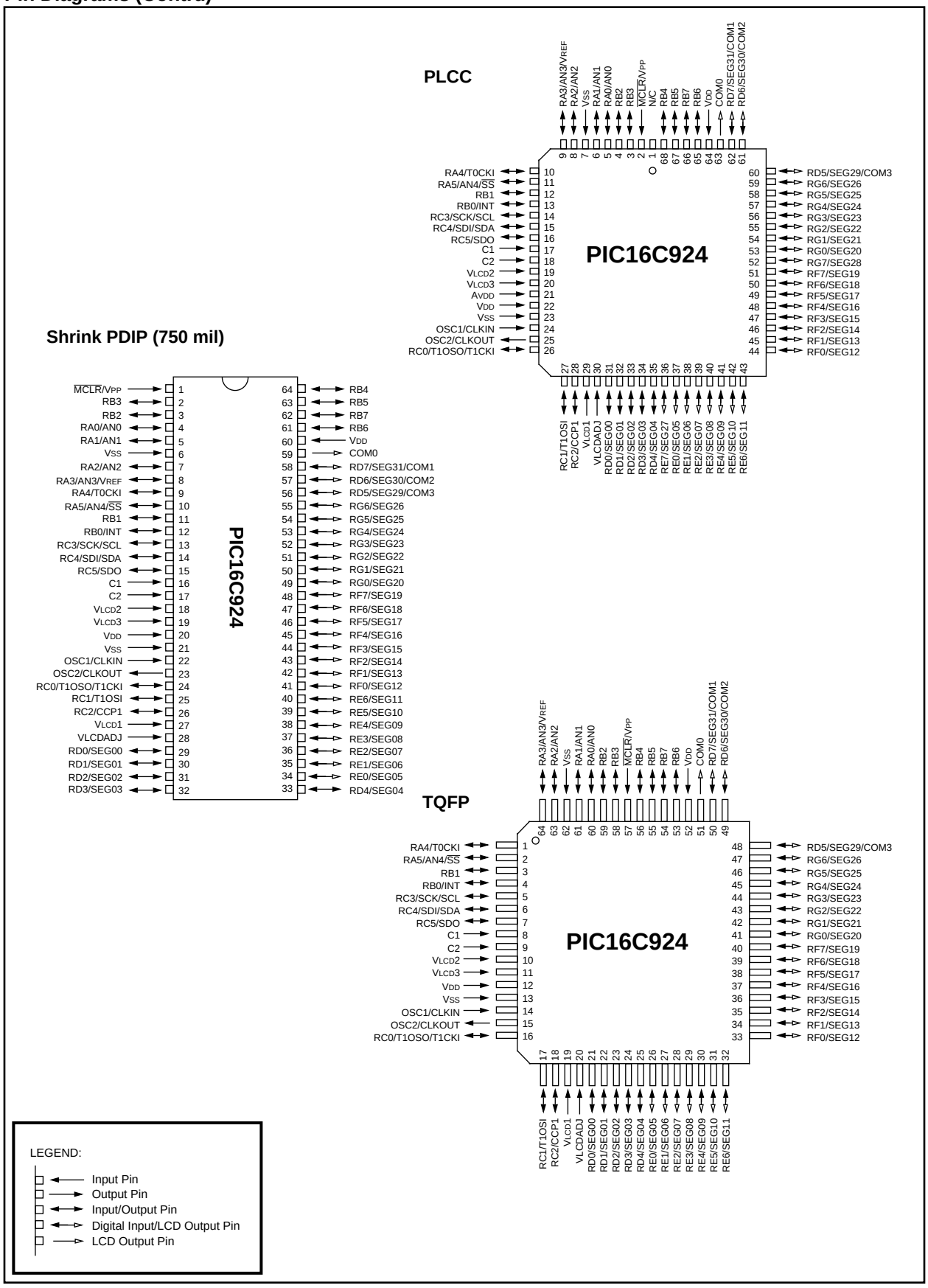

Table of Contents

1.0 General Description ... 5
2.0 PIC16C9XX Device Varieties ... 7
3.0 Architectural Overview ... 9
4.0 Memory Organization ... 17
5.0 Ports ... 31
6.0 Overview of Timer Modules ... 43
7.0 Timer0 Module ... 45
8.0 Timer1 Module ... 51
9.0 Timer2 Module ... 55
10.0 Capture/Compare/PWM (CCP) Module ... 57
11.0 Synchronous Serial Port (SSP) Module ... 63
12.0 Analog-to-Digital Converter (A/D) Module ... 79
13.0 LCD Module ... 89
14.0 Special Features of the CPU ... 103
15.0 Instruction Set Summary ... 119
16.0 Development Support ... 137
17.0 Electrical Characteristics ... 141
18.0 DC and AC Characteristics Graphs and Tables ... 161
19.0 Packaging Information ... 171
Appendix A: ... 175
Appendix B: Compatibility ... 175
Appendix C: What's New ... 176
Appendix D: What's Changed ... 176
Index ... 177
List of Equations And Examples ... 181
List of Figures ... 181
List of Tables ... 182
Reader Response ... 186
PIC16C9XX Product Identification System ... 187

To Our Valued Customers

We constantly strive to improve the quality of all our products and documentation. We have spent an exceptional amount of time to ensure that these documents are correct. However, we realize that we may have missed a few things. If you find any information that is missing or appears in error, please use the reader response form in the back of this data sheet to inform us. We appreciate your assistance in making this a better document.

© 1997 Microchip Technology Inc.

1.0 GENERAL DESCRIPTION

The PIC16C9XX is a family of low-cost, high-performance, CMOS, fully-static, 8-bit microcontrollers with an integrated LCD Driver module, in the PIC16CXXX mid-range family.

All PICmicro™ microcontrollers employ an advanced RISC architecture. The PIC16CXXX microcontroller family has enhanced core features, eight-level deep stack, and multiple internal and external interrupt sources. The separate instruction and data buses of the Harvard architecture allow a 14-bit wide instruction word with the separate 8-bit wide data. The two stage instruction pipeline allows all instructions to execute in a single cycle, except for program branches (which require two cycles). A total of 35 instructions (reduced instruction set) are available. Additionally, a large register set gives some of the architectural innovations used to achieve a very high performance.

PIC16CXXX microcontrollers typically achieve a 2:1 code compression and a 4:1 speed improvement over other 8-bit microcontrollers in their class.

The **PIC16C923** devices have 176 bytes of RAM and 25 I/O pins. In addition several peripheral features are available including: three timer/counters, one Capture/Compare/PWM module, one serial port and one LCD module. The Synchronous Serial Port can be configured as either a 3-wire Serial Peripheral Interface (SPI) or the two-wire Inter-Integrated Circuit (I^2C) bus. The LCD module features programmable multiplex mode (static, 1/2, 1/3 and 1/4) and drive bias (static and 1/3). It is capable of driving up to 32 segments and up to 4 commons. It can also drive the LCD panel while in SLEEP mode.

The **PIC16C924** devices have 176 bytes of RAM and 25 I/O pins. In addition several peripheral features are available including: three timer/counters, one Capture/Compare/PWM module, one serial port and one LCD module. The Synchronous Serial Port can be configured as either a 3-wire Serial Peripheral Interface (SPI) or the two-wire Inter-Integrated Circuit (I^2C) bus. The LCD module features programmable multiplex mode (static, 1/2, 1/3 and 1/4) and drive bias (static and 1/3). It is capable of driving up to 32 segments and up to 4 commons. It can also drive the LCD panel while in SLEEP mode. The PIC16C924 also has an 5-channel high-speed 8-bit A/D. The 8-bit resolution is ideally suited for applications requiring low-cost analog interface, e.g. thermostat control, pressure sensing, and meters.

The PIC16C9XX family has special features to reduce external components, thus reducing cost, enhancing system reliability and reducing power consumption. There are four oscillator options, of which the single pin RC oscillator provides a low-cost solution, the LP oscillator minimizes power consumption, XT is a standard crystal, and the HS is for High Speed crystals. The SLEEP (power-down) feature provides a power saving mode. The user can wake up the chip from SLEEP through several external and internal interrupts and reset(s).

A highly reliable Watchdog Timer with its own on-chip RC oscillator provides recovery in the event of a software lock-up.

A UV erasable CERQUAD (compatible with PLCC) packaged version is ideal for code development while the cost-effective One-Time-Programmable (OTP) version is suitable for production in any volume.

The PIC16C9XX family fits perfectly in applications ranging from handheld meters, thermostats, to home security products. The EPROM technology makes customization of application programs (LCD panels, calibration constants, sensor interfaces, etc.) extremely fast and convenient. The small footprint packages make this microcontroller series perfect for all applications with space limitations. Low cost, low power, high performance, ease of use and I/O flexibility make the PIC16C9XX very versatile even in areas where no microcontroller use has been considered before (e.g. timer functions, capture and compare, PWM functions and coprocessor applications).

1.1 Family and Upward Compatibility

Users familiar with the PIC16C5X microcontroller family will realize that this is an enhanced version of the PIC16C5X architecture. Please refer to Appendix A for a detailed list of enhancements. Code written for the PIC16C5X can be easily ported to the PIC16CXXX family of devices (Appendix B).

1.2 Development Support

PIC16C9XX devices are supported by the complete line of Microchip Development tools.

Please refer to Section 16.0 for more details about Microchip's development tools.

© 1997 Microchip Technology Inc.

TABLE 1-1: PIC16C9XX FAMILY OF DEVICES

		PIC16C923	PIC16C924
Clock	Maximum Frequency of Operation (MHz)	8	8
Memory	EPROM Program Memory	4K	4K
	Data Memory (bytes)	176	176
Peripherals	Timer Module(s)	TMR0, TMR1, TMR2	TMR0, TMR1, TMR2
	Capture/Compare/PWM Module(s)	1	1
	Serial Port(s) (SPI/I^2C, USART)	SPI/I^2C	SPI/I^2C
	Parallel Slave Port	—	—
	A/D Converter (8-bit) Channels	—	5
	LCD Module	4 Com, 32 Seg	4 Com, 32 Seg
Features	Interrupt Sources	8	9
	I/O Pins	25	25
	Input Pins	27	27
	Voltage Range (Volts)	2.5-6.0	2.5-6.0
	In-Circuit Serial Programming	Yes	Yes
	Brown-out Reset	—	—
	Packages	64-pin SDIP, TQFP; 68-pin PLCC, Die	64-pin SDIP, TQFP; 68-pin PLCC, Die

All PICmicro Family devices have Power-on Reset, selectable Watchdog Timer, selectable code protect and high I/O current capability. All PIC16C9XX Family devices use serial programming with clock pin RB6 and data pin RB7.

© 1997 Microchip Technology Inc.

2.0 PIC16C9XX DEVICE VARIETIES

A variety of frequency ranges and packaging options are available. Depending on application and production requirements, the proper device option can be selected using the information in the PIC16C9XX Product Identification System section at the end of this data sheet. When placing orders, please use that page of the data sheet to specify the correct part number.

For the PIC16C9XX family, there are two device “types” as indicated in the device number:

1. **C**, as in PIC16**C**924. These devices have EPROM type memory and operate over the standard voltage range.
2. **LC**, as in PIC16**LC**924. These devices have EPROM type memory and operate over an extended voltage range.

2.1 UV Erasable Devices

The UV erasable version, offered in CERQUAD package, is optimal for prototype development and pilot programs.

The UV erasable version can be erased and reprogrammed to any of the configuration modes. Microchip's PICSTART® Plus and PRO MATE® II programmers both support the PIC16C9XX. Third party programmers also are available; refer to the *Microchip Third Party Guide* for a list of sources.

2.2 One-Time-Programmable (OTP) Devices

The availability of OTP devices is especially useful for customers who need the flexibility for frequent code updates and small volume applications.

The OTP devices, packaged in plastic packages, permit the user to program them once. In addition to the program memory, the configuration bits must also be programmed.

2.3 Quick-Turnaround-Production (QTP) Devices

Microchip offers a QTP Programming Service for factory production orders. This service is made available for users who choose not to program a medium to high quantity of units and whose code patterns have stabilized. The devices are identical to the OTP devices but with all EPROM locations and configuration options already programmed by the factory. Certain code and prototype verification procedures apply before production shipments are available. Please contact your local Microchip Technology sales office for more details.

2.4 Serialized Quick-Turnaround Production (SQTP℠) Devices

Microchip offers a unique programming service where a few user-defined locations in each device are programmed with different serial numbers. The serial numbers may be random, pseudo-random or sequential.

Serial programming allows each device to have a unique number which can serve as an entry-code, password or ID number.

© 1997 Microchip Technology Inc.

NOTES:

© 1997 Microchip Technology Inc.

3.0 ARCHITECTURAL OVERVIEW

The high performance of the PIC16CXXX family can be attributed to a number of architectural features commonly found in RISC microprocessors. To begin with, the PIC16CXXX uses a Harvard architecture, in which, program and data are accessed from separate memories using separate buses. This improves bandwidth over traditional von Neumann architecture where program and data are fetched from the same memory using the same bus. Separating program and data buses further allows instructions to be sized differently than the 8-bit wide data word. Instruction opcodes are 14-bits wide making it possible to have all single word instructions. A 14-bit wide program memory access bus fetches a 14-bit instruction in a single cycle. A two-stage pipeline overlaps fetch and execution of instructions (Example 3-1). Consequently, all instructions execute in a single cycle (500 ns @ 8 MHz) except for program branches.

The PIC16C923 and PIC16C924 both address 4K x 14 of program memory and 176 x 8 of data memory.

The PIC16CXXX can directly or indirectly address its register files or data memory. All special function registers, including the program counter, are mapped in the data memory. The PIC16CXXX has an orthogonal (symmetrical) instruction set that makes it possible to carry out any operation on any register using any addressing mode. This symmetrical nature and lack of ‘special optimal situations’ make programming with the PIC16CXXX simple yet efficient, thus significantly reducing the learning curve.

PIC16CXXX devices contain an 8-bit ALU and working register. The ALU is a general purpose arithmetic unit. It performs arithmetic and Boolean functions between the data in the working register and any register file.

The ALU is 8-bits wide and capable of addition, subtraction, shift and logical operations. Unless otherwise mentioned, arithmetic operations are two's complement in nature. In two-operand instructions, typically one operand is the working register (W register). The other operand is a file register or an immediate constant. In single operand instructions, the operand is either the W register or a file register.

The W register is an 8-bit working register used for ALU operations. It is not an addressable register.

Depending on the instruction executed, the ALU may affect the values of the Carry (C), Digit Carry (DC), and Zero (Z) bits in the STATUS register. The C and DC bits operate as a $\overline{\text{borrow}}$ bit and a $\overline{\text{digit}}$ $\overline{\text{borrow}}$ out bit, respectively, in subtraction. See the `SUBLW` and `SUBWF` instructions for examples.

© 1997 Microchip Technology Inc.

FIGURE 3-1: PIC16C923 BLOCK DIAGRAM

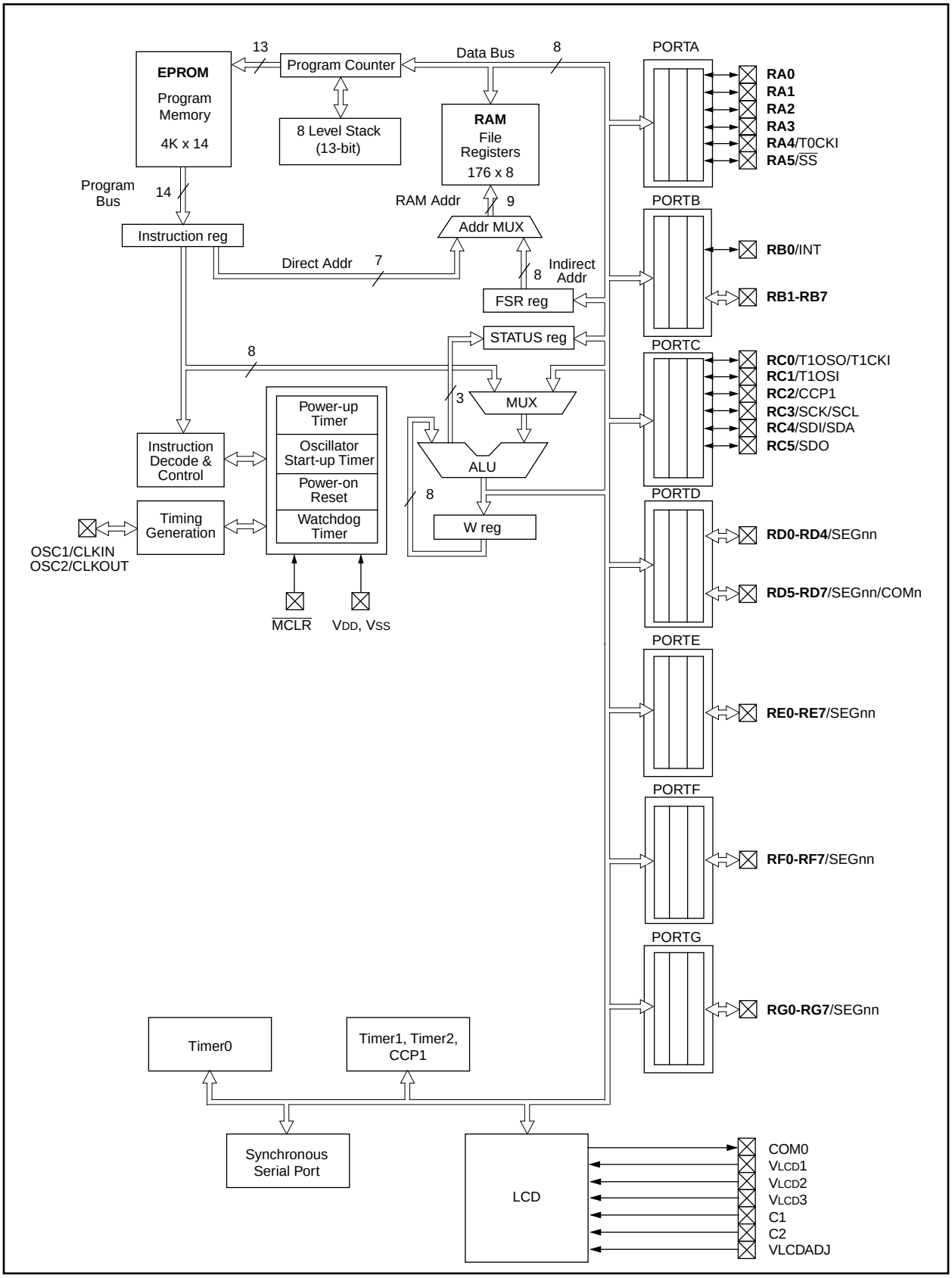

© 1997 Microchip Technology Inc.

FIGURE 3-2: PIC16C924 BLOCK DIAGRAM

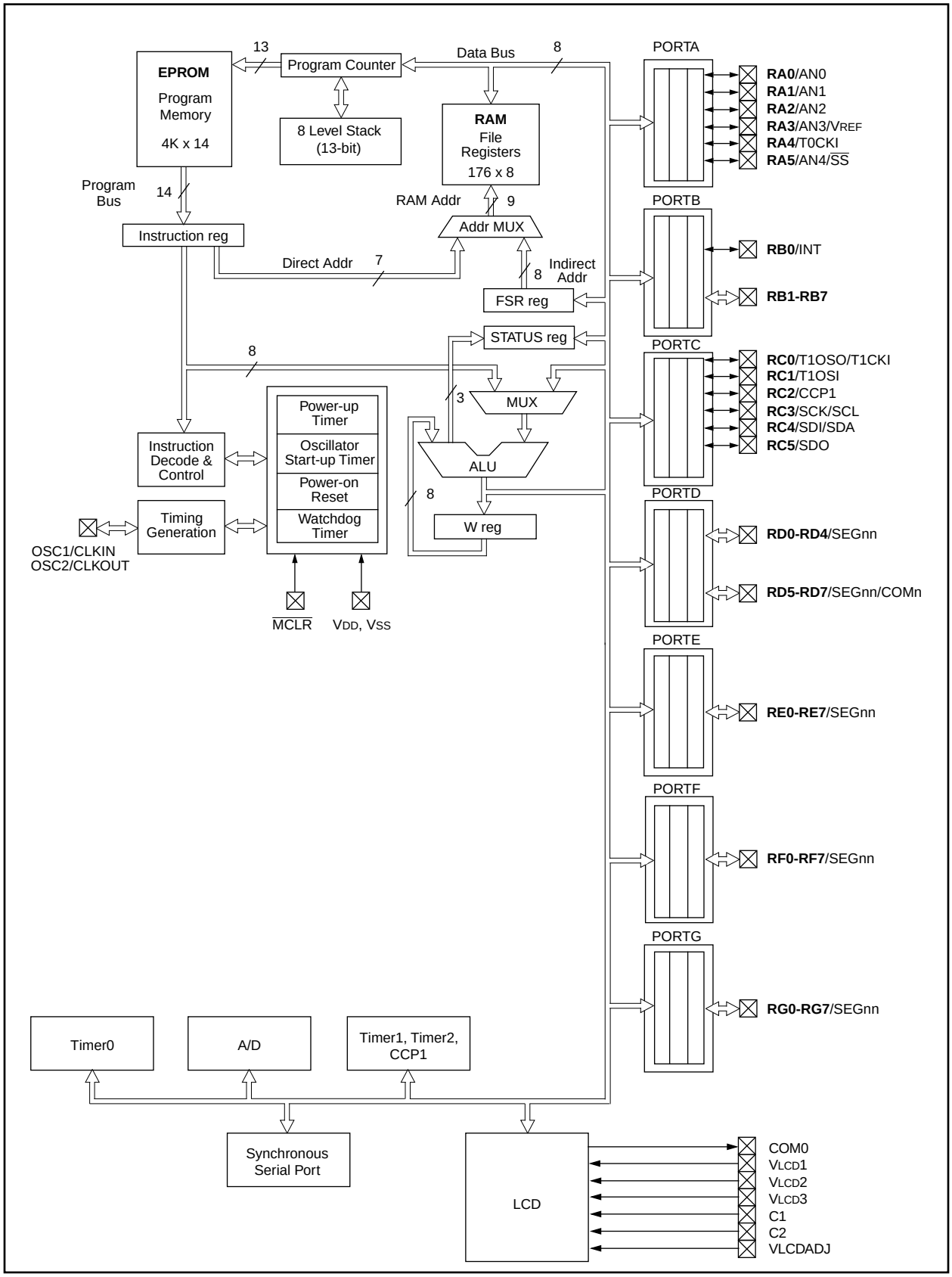

TABLE 3-1: PIC16C9XX PINOUT DESCRIPTION

Pin Name	DIP Pin#	PLCC Pin#	TQFP Pin#	Pin Type	Buffer Type	Description
OSC1/CLKIN	22	24	14	I	ST/CMOS	Oscillator crystal input or external clock source input. This buffer is a Schmitt Trigger input when configured in RC oscillator mode and a CMOS input otherwise.
OSC2/CLKOUT	23	25	15	O	—	Oscillator crystal output. Connects to crystal or resonator in crystal oscillator mode. In RC mode, OSC2 pin outputs CLKOUT which has 1/4 the frequency of OSC1, and denotes the instruction cycle rate.
$\overline{\text{MCLR}}$/VPP	1	2	57	I/P	ST	Master clear (reset) input or programming voltage input. This pin is an active low reset to the device.
						PORTA is a bi-directional I/O port. The AN and VREF multiplexed functions are used by the PIC16C924 only.
RA0/AN0	4	5	60	I/O	TTL	RA0 can also be Analog input0.
RA1/AN1	5	6	61	I/O	TTL	RA1 can also be Analog input1.
RA2/AN2	7	8	63	I/O	TTL	RA2 can also be Analog input2.
RA3/AN3/VREF	8	9	64	I/O	TTL	RA3 can also be Analog input3 or A/D Voltage Reference.
RA4/T0CKI	9	10	1	I/O	ST	RA4 can also be the clock input to the Timer0 timer/counter. Output is open drain type.
RA5/AN4/$\overline{\text{SS}}$	10	11	2	I/O	TTL	RA5 can be the slave select for the synchronous serial port or Analog input4.
						PORTB is a bi-directional I/O port. PORTB can be software programmed for internal weak pull-ups on all inputs.
RB0/INT	12	13	4	I/O	TTL/ST	RB0 can also be the external interrupt pin. This buffer is a Schmitt Trigger input when configured as an external interrupt.
RB1	11	12	3	I/O	TTL	
RB2	3	4	59	I/O	TTL	
RB3	2	3	58	I/O	TTL	
RB4	64	68	56	I/O	TTL	Interrupt on change pin.
RB5	63	67	55	I/O	TTL	Interrupt on change pin.
RB6	61	65	53	I/O	TTL/ST	Interrupt on change pin. Serial programming clock. This buffer is a Schmitt Trigger input when used in serial programming mode.
RB7	62	66	54	I/O	TTL/ST	Interrupt on change pin. Serial programming data. This buffer is a Schmitt Trigger input when used in serial programming mode.
						PORTC is a bi-directional I/O port.
RC0/T1OSO/T1CKI	24	26	16	I/O	ST	RC0 can also be the Timer1 oscillator output or Timer1 clock input.
RC1/T1OSI	25	27	17	I/O	ST	RC1 can also be the Timer1 oscillator input.
RC2/CCP1	26	28	18	I/O	ST	RC2 can also be the Capture1 input/Compare1 output/PWM1 output.
RC3/SCK/SCL	13	14	5	I/O	ST	RC3 can also be the synchronous serial clock input/output for both SPI and I^2C modes.
RC4/SDI/SDA	14	15	6	I/O	ST	RC4 can also be the SPI Data In (SPI mode) or data I/O (I^2C mode).
RC5/SDO	15	16	7	I/O	ST	RC5 can also be the SPI Data Out (SPI mode).
C1	16	17	8	P		LCD Voltage Generation.
C2	17	18	9	P		LCD Voltage Generation.

Legend: I = input O = output P = power L = LCD Driver
— = Not used TTL = TTL input ST = Schmitt Trigger input

© 1997 Microchip Technology Inc.

TABLE 3-1: PIC16C9XX PINOUT DESCRIPTION (Cont.'d)

Pin Name	DIP Pin#	PLCC Pin#	TQFP Pin#	Pin Type	Buffer Type	Description
COM0	59	63	51	L		Common Driver0
						PORTD is a digital input/output port. These pins are also used as LCD Segment and/or Common Drivers.
RD0/SEG00	29	31	21	I/O/L	ST	Segment Driver00/Digital Input/Output.
RD1/SEG01	30	32	22	I/O/L	ST	Segment Driver01/Digital Input/Output.
RD2/SEG02	31	33	23	I/O/L	ST	Segment Driver02/Digital Input/Output.
RD3/SEG03	32	34	24	I/O/L	ST	Segment Driver03/Digital Input/Output.
RD4/SEG04	33	35	25	I/O/L	ST	Segment Driver04/Digital Input/Output.
RD5/SEG29/COM3	56	60	48	I/L	ST	Segment Driver29/Common Driver3/Digital Input.
RD6/SEG30/COM2	57	61	49	I/L	ST	Segment Driver30/Common Driver2/Digital Input.
RD7/SEG31/COM1	58	62	50	I/L	ST	Segment Driver31/Common Driver1/Digital Input.
						PORTE is a digital input or LCD Segment Driver port.
RE0/SEG05	34	37	26	I/L	ST	Segment Driver05.
RE1/SEG06	35	38	27	I/L	ST	Segment Driver06.
RE2/SEG07	36	39	28	I/L	ST	Segment Driver07.
RE3/SEG08	37	40	29	I/L	ST	Segment Driver08.
RE4/SEG09	38	41	30	I/L	ST	Segment Driver09.
RE5/SEG10	39	42	31	I/L	ST	Segment Driver10.
RE6/SEG11	40	43	32	I/L	ST	Segment Driver11.
RE7/SEG27	-	36	-	I/L	ST	Segment Driver27 (Not available on 64-pin devices).
						PORTF is a digital input or LCD Segment Driver port.
RF0/SEG12	41	44	33	I/L	ST	Segment Driver12.
RF1/SEG13	42	45	34	I/L	ST	Segment Driver13.
RF2/SEG14	43	46	35	I/L	ST	Segment Driver14.
RF3/SEG15	44	47	36	I/L	ST	Segment Driver15.
RF4/SEG16	45	48	37	I/L	ST	Segment Driver16.
RF5/SEG17	46	49	38	I/L	ST	Segment Driver17.
RF6/SEG18	47	50	39	I/L	ST	Segment Driver18.
RF7/SEG19	48	51	40	I/L	ST	Segment Driver19.
						PORTG is a digital input or LCD Segment Driver port.
RG0/SEG20	49	53	41	I/L	ST	Segment Driver20.
RG1/SEG21	50	54	42	I/L	ST	Segment Driver21.
RG2/SEG22	51	55	43	I/L	ST	Segment Driver22.
RG3/SEG23	52	56	44	I/L	ST	Segment Driver23.
RG4/SEG24	53	57	45	I/L	ST	Segment Driver24.
RG5/SEG25	54	58	46	I/L	ST	Segment Driver25.
RG6/SEG26	55	59	47	I/L	ST	Segment Driver26.
RG7/SEG28	—	52	—	I/L	ST	Segment Driver28 (Not available on 64-pin devices).
VLCDADJ	28	30	20	P		LCD Voltage Generation.
A_{VDD}	—	21	—	P		Analog Power (PIC16C924 only).
V_{DD}	—	21	—	P		Power (PIC16C923 only).
$V_{LCD}1$	27	29	19	P		LCD Voltage.
$V_{LCD}2$	18	19	10	P	—	LCD Voltage.

Legend: I = input O = output P = power L = LCD Driver
— = Not used TTL = TTL input ST = Schmitt Trigger input

TABLE 3-1: PIC16C9XX PINOUT DESCRIPTION (Cont.'d)

Pin Name	DIP Pin#	PLCC Pin#	TQFP Pin#	Pin Type	Buffer Type	Description
$V_{LCD}3$	19	20	11	P	—	LCD Voltage.
V_{DD}	20, 60	22, 64	12, 52	P	—	Digital power.
V_{SS}	6, 21	7, 23	13, 62	P	—	Ground reference.
NC	—	1	—	—	—	These pins are not internally connected. These pins should be left unconnected.

Legend: I = input O = output P = power L = LCD Driver
— = Not used TTL = TTL input ST = Schmitt Trigger input

© 1997 Microchip Technology Inc.

3.1 Clocking Scheme/Instruction Cycle

The clock input (from OSC1) is internally divided by four to generate four non-overlapping quadrature clocks namely Q1, Q2, Q3 and Q4. Internally, the program counter (PC) is incremented every Q1, the instruction is fetched from the program memory and latched into the instruction register in Q4. The instruction is decoded and executed during the following Q1 through Q4. The clocks and instruction execution flow is shown in Figure 3-3.

3.2 Instruction Flow/Pipelining

An “Instruction Cycle” consists of four Q cycles (Q1, Q2, Q3 and Q4). The instruction fetch and execute are pipelined such that fetch takes one instruction cycle while decode and execute takes another instruction cycle. However, due to the pipelining, each instruction effectively executes in one cycle. If an instruction causes the program counter to change (e.g. `GOTO`) then two cycles are required to complete the instruction (Example 3-1).

A fetch cycle begins with the program counter (PC) incrementing in Q1.

In the execution cycle, the fetched instruction is latched into the “Instruction Register" in cycle Q1. This instruction is then decoded and executed during the Q2, Q3, and Q4 cycles. Data memory is read during Q2 (operand read) and written during Q4 (destination write).

FIGURE 3-3: CLOCK/INSTRUCTION CYCLE

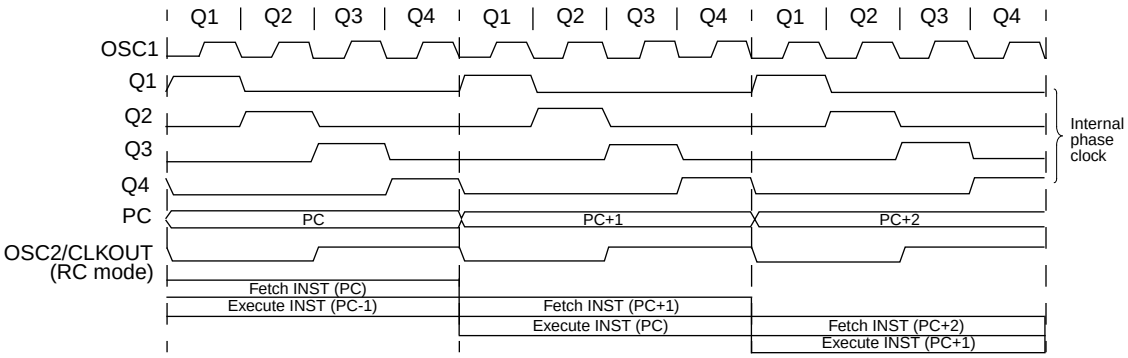

EXAMPLE 3-1: INSTRUCTION PIPELINE FLOW

	Tcy0	Tcy1	Tcy2	Tcy3	Tcy4	Tcy5
1. `MOVLW 55h`	Fetch 1	Execute 1				
2. `MOVWF PORTB`		Fetch 2	Execute 2			
3. `CALL SUB_1`			Fetch 3	Execute 3		
4. `BSF PORTA, BIT3 (Forced NOP)`				Fetch 4	Flush	
5. `Instruction @ address SUB_1`					Fetch SUB_1	Execute SUB_1

All instructions are single cycle, except for any program branches. These take two cycles since the fetch instruction is “flushed” from the pipeline while the new instruction is being fetched and then executed.

NOTES:

© 1997 Microchip Technology Inc.

4.0 MEMORY ORGANIZATION

4.1 Program Memory Organization

The PIC16C9XX family has a 13-bit program counter capable of addressing an 8K x 14 program memory space.

Only the first 4K x 14 (0000h-0FFFh) is physically implemented. Accessing a location above the physically implemented addresses will cause a wraparound. The reset vector is at 0000h and the interrupt vector is at 0004h.

FIGURE 4-1: PROGRAM MEMORY MAP AND STACK

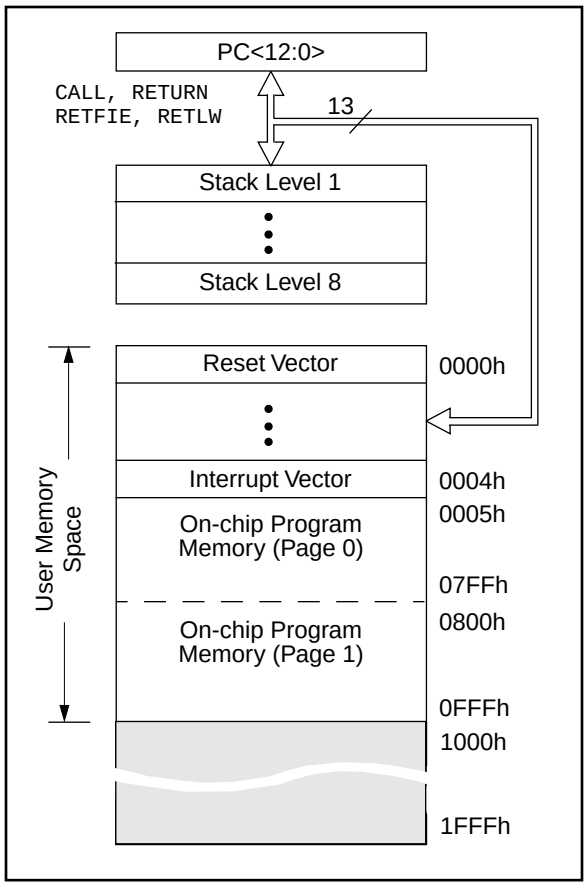

4.2 Data Memory Organization

The data memory is partitioned into four Banks which contain the General Purpose Registers and the Special Function Registers. Bits RP1 and RP0 are the bank select bits.

RP1:RP0 (STATUS<6:5>)

11 = Bank 3 (180h-1FFh)

10 = Bank 2 (100h-17Fh)

01 = Bank 1 (80h-FFh)

00 = Bank 0 (00h-7Fh)

The lower locations of each Bank are reserved for the Special Function Registers. Above the Special Function Registers are General Purpose Registers implemented as static RAM. All four banks contain special function registers. Some “high use” special function registers are mirrored in other banks for code reduction and quicker access.

4.2.1 GENERAL PURPOSE REGISTER FILE

The register file can be accessed either directly, or indirectly through the File Select Register FSR (Section 4.5).

The following General Purpose Registers are not physically implemented:

- F0h-FFh of Bank 1
- 170h-17Fh of Bank 2
- 1F0h-1FFh of Bank 3

These locations are used for common access across banks.

FIGURE 4-2: REGISTER FILE MAP

Bank 0	File Address	Bank 1	File Address	Bank 2	File Address	Bank 3	File Address
Indirect addr.(1)	00h	Indirect addr.(1)	80h	Indirect addr.(1)	100h	Indirect addr.(1)	180h
TMR0	01h	OPTION	81h	TMR0	101h	OPTION	181h
PCL	02h	PCL	82h	PCL	102h	PCL	182h
STATUS	03h	STATUS	83h	STATUS	103h	STATUS	183h
FSR	04h	FSR	84h	FSR	104h	FSR	184h
PORTA	05h	TRISA	85h		105h		185h
PORTB	06h	TRISB	86h	PORTB	106h	TRISB	186h
PORTC	07h	TRISC	87h	PORTF	107h	TRISF	187h
PORTD	08h	TRISD	88h	PORTG	108h	TRISG	188h
PORTE	09h	TRISE	89h		109h		189h
PCLATH	0Ah	PCLATH	8Ah	PCLATH	10Ah	PCLATH	18Ah
INTCON	0Bh	INTCON	8Bh	INTCON	10Bh	INTCON	18Bh
PIR1	0Ch	PIE1	8Ch		10Ch		18Ch
	0Dh		8Dh	LCDSE	10Dh		18Dh
TMR1L	0Eh	PCON	8Eh	LCDPS	10Eh		18Eh
TMR1H	0Fh		8Fh	LCDCON	10Fh		18Fh
T1CON	10h		90h	LCDD00	110h		190h
TMR2	11h		91h	LCDD01	111h		191h
T2CON	12h	PR2	92h	LCDD02	112h		192h
SSPBUF	13h	SSPADD	93h	LCDD03	113h		193h
SSPCON	14h	SSPSTAT	94h	LCDD04	114h		194h
CCPR1L	15h		95h	LCDD05	115h		195h
CCPR1H	16h		96h	LCDD06	116h		196h
CCP1CON	17h		97h	LCDD07	117h		197h
	18h		98h	LCDD08	118h		198h
	19h		99h	LCDD09	119h		199h
	1Ah		9Ah	LCDD10	11Ah		19Ah
	1Bh		9Bh	LCDD11	11Bh		19Bh
	1Ch		9Ch	LCDD12	11Ch		19Ch
	1Dh		9Dh	LCDD13	11Dh		19Dh
ADRES(2)	1Eh		9Eh	LCDD14	11Eh		19Eh
ADCON0(2)	1Fh	ADCON1(2)	9Fh	LCDD15	11Fh		19Fh
General Purpose Register	20h … 7Fh	General Purpose Register	A0h … EFh		120h … 16F		1A0h … 1EFh
		Mapped in Bank 0 70h-7Fh	F0h … FFh	Mapped in Bank 0 70h-7Fh	170 … 17F	Mapped in Bank 0 70h-7Fh	1F0h … 1FFh

Unimplemented data memory locations, read as '0'.

Note 1: Not a physical register.

2: These registers are not implemented on the PIC16C923.

© 1997 Microchip Technology Inc.

4.2.2 SPECIAL FUNCTION REGISTERS

The Special Function Registers are registers used by the CPU and Peripheral Modules for controlling the desired operation of the device. These registers are implemented as static RAM.

The special function registers can be classified into two sets (core and peripheral). Those registers associated with the “core” functions are described in this section, and those related to the operation of the peripheral features are described in the section of that peripheral feature.

TABLE 4-1: SPECIAL FUNCTION REGISTER SUMMARY

Address	Name	Bit 7	Bit 6	Bit 5	Bit 4	Bit 3	Bit 2	Bit 1	Bit 0	Value on Power-on Reset	Value on all other resets
Bank 0											
00h	INDF	Addressing this location uses contents of FSR to address data memory (not a physical register)								0000 0000	0000 0000
01h	TMR0	Timer0 module’s register								xxxx xxxx	uuuu uuuu
02h	PCL	Program Counter's (PC) Least Significant Byte								0000 0000	0000 0000
03h	STATUS	IRP	RP1	RP0	$\overline{TO}$	$\overline{PD}$	Z	DC	C	0001 1xxx	000q quuu
04h	FSR	Indirect data memory address pointer								xxxx xxxx	uuuu uuuu
05h	PORTA	—	—	PORTA Data Latch when written: PORTA pins when read						(4)	(4)
06h	PORTB	PORTB Data Latch when written: PORTB pins when read								xxxx xxxx	uuuu uuuu
07h	PORTC	—	—	PORTC Data Latch when written: PORTC pins when read						--xx xxxx	--uu uuuu
08h	PORTD	PORTD Data Latch when written: PORTD pins when read								0000 0000	0000 0000
09h	PORTE	PORTE pins when read								0000 0000	0000 0000
0Ah	PCLATH	—	—	—	Write Buffer for the upper 5 bits of the Program Counter					---0 0000	---0 0000
0Bh	INTCON	GIE	PEIE	T0IE	INTE	RBIE	T0IF	INTF	RBIF	0000 000x	0000 000u
0Ch	PIR1	LCDIF	ADIF(2)	—	—	SSPIF	CCP1IF	TMR2IF	TMR1IF	00-- 0000	00-- 0000
0Dh	—	Unimplemented								—	—
0Eh	TMR1L	Holding register for the Least Significant Byte of the 16-bit TMR1 register								xxxx xxxx	uuuu uuuu
0Fh	TMR1H	Holding register for the Most Significant Byte of the 16-bit TMR1 register								xxxx xxxx	uuuu uuuu
10h	T1CON	—	—	T1CKPS1	T1CKPS0	T1OSCEN	$\overline{T1SYNC}$	TMR1CS	TMR1ON	--00 0000	--uu uuuu
11h	TMR2	Timer2 module’s register								0000 0000	0000 0000
12h	T2CON	—	TOUTPS3	TOUTPS2	TOUTPS1	TOUTPS0	TMR2ON	T2CKPS1	T2CKPS0	-000 0000	-000 0000
13h	SSPBUF	Synchronous Serial Port Receive Buffer/Transmit Register								xxxx xxxx	uuuu uuuu
14h	SSPCON	WCOL	SSPOV	SSPEN	CKP	SSPM3	SSPM2	SSPM1	SSPM0	0000 0000	0000 0000
15h	CCPR1L	Capture/Compare/PWM Register (LSB)								xxxx xxxx	uuuu uuuu
16h	CCPR1H	Capture/Compare/PWM Register (MSB)								xxxx xxxx	uuuu uuuu
17h	CCP1CON	—	—	CCP1X	CCP1Y	CCP1M3	CCP1M2	CCP1M1	CCP1M0	--00 0000	--00 0000
18h	—	Unimplemented								—	—
19h	—	Unimplemented								—	—
1Ah	—	Unimplemented								—	—
1Bh	—	Unimplemented								—	—
1Ch	—	Unimplemented								—	—
1Dh	—	Unimplemented								—	—
1Eh(1)	ADRES	A/D Result Register								xxxx xxxx	uuuu uuuu
1Fh(1)	ADCON0	ADCS1	ADCS0	CHS2	CHS1	CHS0	GO/$\overline{DONE}$	(5)	ADON	0000 0000	0000 0000

Legend: x = unknown, u = unchanged, q = value depends on condition, - = unimplemented read as '0', shaded locations are unimplemented, read as ‘0’.

Note 1: Registers ADRES, ADCON0, and ADCON1 are not implemented in the PIC16C923, read as '0'.
2: These bits are reserved on the PIC16C923, always maintain these bits clear.
3: These pixels do not display, but can be used as general purpose RAM.
4: PIC16C923 reset values for PORTA: `--xx xxxx` for a POR, and `--uu uuuu` for all other resets, PIC16C924 reset values for PORTA: `--0x 0000` when read.
5: Bit1 of ADCON0 is reserved on the PIC16C924, always maintain this bit clear.

TABLE 4-1: SPECIAL FUNCTION REGISTER SUMMARY (Cont.'d)

Address	Name	Bit 7	Bit 6	Bit 5	Bit 4	Bit 3	Bit 2	Bit 1	Bit 0	Value on Power-on Reset	Value on all other resets
Bank 1											
80h	INDF	Addressing this location uses contents of FSR to address data memory (not a physical register)								0000 0000	0000 0000
81h	OPTION	$\overline{\text{RBPU}}$	INTEDG	T0CS	T0SE	PSA	PS2	PS1	PS0	1111 1111	1111 1111
82h	PCL	Program Counter's (PC) Least Significant Byte								0000 0000	0000 0000
83h	STATUS	IRP	RP1	RP0	$\overline{\text{TO}}$	$\overline{\text{PD}}$	Z	DC	C	0001 1xxx	000q quuu
84h	FSR	Indirect data memory address pointer								xxxx xxxx	uuuu uuuu
85h	TRISA	—	—	PORTA Data Direction Register						--11 1111	--11 1111
86h	TRISB	PORTB Data Direction Register								1111 1111	1111 1111
87h	TRISC	—	—	PORTC Data Direction Register						--11 1111	--11 1111
88h	TRISD	PORTD Data Direction Register								1111 1111	1111 1111
89h	TRISE	PORTE Data Direction Register								1111 1111	1111 1111
8Ah	PCLATH	—	—	—	Write Buffer for the upper 5 bits of the PC					---0 0000	---0 0000
8Bh	INTCON	GIE	PEIE	T0IE	INTE	RBIE	T0IF	INTF	RBIF	0000 000x	0000 000u
8Ch	PIE1	LCDIE	ADIE(2)	—	—	SSPIE	CCP1IE	TMR2IE	TMR1IE	00-- 0000	00-- 0000
8Dh	—	Unimplemented								—	—
8Eh	PCON	—	—	—	—	—	—	$\overline{\text{POR}}$	—	---- --0-	---- --u-
8Fh	—	Unimplemented								—	—
90h	—	Unimplemented								—	—
91h	—	Unimplemented								—	—
92h	PR2	Timer2 Period Register								1111 1111	1111 1111
93h	SSPADD	Synchronous Serial Port (I^2C mode) Address Register								0000 0000	0000 0000
94h	SSPSTAT	SMP	CKE	D/$\overline{\text{A}}$	P	S	R/$\overline{\text{W}}$	UA	BF	0000 0000	0000 0000
95h	—	Unimplemented								—	—
96h	—	Unimplemented								—	—
97h	—	Unimplemented								—	—
98h	—	Unimplemented								—	—
99h	—	Unimplemented								—	—
9Ah	—	Unimplemented								—	—
9Bh	—	Unimplemented								—	—
9Ch	—	Unimplemented								—	—
9Dh	—	Unimplemented								—	—
9Eh	—	Unimplemented								—	—
9Fh(1)	ADCON1	—	—	—	—	—	PCFG2	PCFG1	PCFG0	---- -000	---- -000

Legend: x = unknown, u = unchanged, q = value depends on condition, - = unimplemented read as '0', shaded locations are unimplemented, read as '0'.

Note 1: Registers ADRES, ADCON0, and ADCON1 are not implemented in the PIC16C923, read as '0'.
2: These bits are reserved on the PIC16C923, always maintain these bits clear.
3: These pixels do not display, but can be used as general purpose RAM.
4: PIC16C923 reset values for PORTA: `--xx xxxx` for a POR, and `--uu uuuu` for all other resets, PIC16C924 reset values for PORTA: `--0x 0000` when read.
5: Bit1 of ADCON0 is reserved on the PIC16C924, always maintain this bit clear.

© 1997 Microchip Technology Inc.

TABLE 4-1: SPECIAL FUNCTION REGISTER SUMMARY (Cont.'d)

Address	Name	Bit 7	Bit 6	Bit 5	Bit 4	Bit 3	Bit 2	Bit 1	Bit 0	Value on Power-on Reset	Value on all other resets
Bank 2											
100h	INDF	Addressing this location uses contents of FSR to address data memory (not a physical register)								0000 0000	0000 0000
101h	TMR0	Timer0 module's register								xxxx xxxx	uuuu uuuu
102h	PCL	Program Counter's (PC) Least Significant Byte								0000 0000	0000 0000
103h	STATUS	IRP	RP1	RP0	$\overline{TO}$	$\overline{PD}$	Z	DC	C	0001 1xxx	000q quuu
104h	FSR	Indirect data memory address pointer								xxxx xxxx	uuuu uuuu
105h	—	Unimplemented								—	—
106h	PORTB	PORTB Data Latch when written: PORTB pins when read								xxxx xxxx	uuuu uuuu
107h	PORTF	PORTF pins when read								0000 0000	0000 0000
108h	PORTG	PORTG pins when read								0000 0000	0000 0000
109h	—	Unimplemented								—	—
10Ah	PCLATH	—	—	—	Write Buffer for the upper 5 bits of the PC					---0 0000	---0 0000
10Bh	INTCON	GIE	PEIE	T0IE	INTE	RBIE	T0IF	INTF	RBIF	0000 000x	0000 000u
10Ch	—	Unimplemented								—	—
10Dh	LCDSE	SE29	SE27	SE20	SE16	SE12	SE9	SE5	SE0	1111 1111	1111 1111
10Eh	LCDPS	—	—	—	—	LP3	LP2	LP1	LP0	---- 0000	---- 0000
10Fh	LCDCON	LCDEN	SLPEN	—	VGEN	CS1	CS0	LMUX1	LMUX0	00-0 0000	00-0 0000
110h	LCDD00	SEG07 COM0	SEG06 COM0	SEG05 COM0	SEG04 COM0	SEG03 COM0	SEG02 COM0	SEG01 COM0	SEG00 COM0	xxxx xxxx	uuuu uuuu
111h	LCDD01	SEG15 COM0	SEG14 COM0	SEG13 COM0	SEG12 COM0	SEG11 COM0	SEG10 COM0	SEG09 COM0	SEG08 COM0	xxxx xxxx	uuuu uuuu
112h	LCDD02	SEG23 COM0	SEG22 COM0	SEG21 COM0	SEG20 COM0	SEG19 COM0	SEG18 COM0	SEG17 COM0	SEG16 COM0	xxxx xxxx	uuuu uuuu
113h	LCDD03	SEG31 COM0	SEG30 COM0	SEG29 COM0	SEG28 COM0	SEG27 COM0	SEG26 COM0	SEG25 COM0	SEG24 COM0	xxxx xxxx	uuuu uuuu
114h	LCDD04	SEG07 COM1	SEG06 COM1	SEG05 COM1	SEG04 COM1	SEG03 COM1	SEG02 COM1	SEG01 COM1	SEG00 COM1	xxxx xxxx	uuuu uuuu
115h	LCDD05	SEG15 COM1	SEG14 COM1	SEG13 COM1	SEG12 COM1	SEG11 COM1	SEG10 COM1	SEG09 COM1	SEG08 COM1	xxxx xxxx	uuuu uuuu
116h	LCDD06	SEG23 COM1	SEG22 COM1	SEG21 COM1	SEG20 COM1	SEG19 COM1	SEG18 COM1	SEG17 COM1	SEG16 COM1	xxxx xxxx	uuuu uuuu
117h	LCDD07	SEG31 COM1(3)	SEG30 COM1	SEG29 COM1	SEG28 COM1	SEG27 COM1	SEG26 COM1	SEG25 COM1	SEG24 COM1	xxxx xxxx	uuuu uuuu
118h	LCDD08	SEG07 COM2	SEG06 COM2	SEG05 COM2	SEG04 COM2	SEG03 COM2	SEG02 COM2	SEG01 COM2	SEG00 COM2	xxxx xxxx	uuuu uuuu
119h	LCDD09	SEG15 COM2	SEG14 COM2	SEG13 COM2	SEG12 COM2	SEG11 COM2	SEG10 COM2	SEG09 COM2	SEG08 COM2	xxxx xxxx	uuuu uuuu
11Ah	LCDD10	SEG23 COM2	SEG22 COM2	SEG21 COM2	SEG20 COM2	SEG19 COM2	SEG18 COM2	SEG17 COM2	SEG16 COM2	xxxx xxxx	uuuu uuuu
11Bh	LCDD11	SEG31 COM2(3)	SEG30 COM2(3)	SEG29 COM2	SEG28 COM2	SEG27 COM2	SEG26 COM2	SEG25 COM2	SEG24 COM2	xxxx xxxx	uuuu uuuu
11Ch	LCDD12	SEG07 COM3	SEG06 COM3	SEG05 COM3	SEG04 COM3	SEG03 COM3	SEG02 COM3	SEG01 COM3	SEG00 COM3	xxxx xxxx	uuuu uuuu
11Dh	LCDD13	SEG15 COM3	SEG14 COM3	SEG13 COM3	SEG12 COM3	SEG11 COM3	SEG10 COM3	SEG09 COM3	SEG08 COM3	xxxx xxxx	uuuu uuuu
11Eh	LCDD14	SEG23 COM3	SEG22 COM3	SEG21 COM3	SEG20 COM3	SEG19 COM3	SEG18 COM3	SEG17 COM3	SEG16 COM3	xxxx xxxx	uuuu uuuu
11Fh	LCDD15	SEG31 COM3(3)	SEG30 COM3(3)	SEG29 COM3(3)	SEG28 COM3	SEG27 COM3	SEG26 COM3	SEG25 COM3	SEG24 COM3	xxxx xxxx	uuuu uuuu

Legend: x = unknown, u = unchanged, q = value depends on condition, - = unimplemented read as '0', shaded locations are unimplemented, read as '0'.

Note 1: Registers ADRES, ADCON0, and ADCON1 are not implemented in the PIC16C923, read as '0'.
2: These bits are reserved on the PIC16C923, always maintain these bits clear.
3: These pixels do not display, but can be used as general purpose RAM.
4: PIC16C923 reset values for PORTA: `--xx xxxx` for a POR, and `--uu uuuu` for all other resets, PIC16C924 reset values for PORTA: `--0x 0000` when read.
5: Bit1 of ADCON0 is reserved on the PIC16C924, always maintain this bit clear.

TABLE 4-1: SPECIAL FUNCTION REGISTER SUMMARY (Cont.'d)

Address	Name	Bit 7	Bit 6	Bit 5	Bit 4	Bit 3	Bit 2	Bit 1	Bit 0	Value on Power-on Reset	Value on all other resets
Bank 3											
180h	INDF	Addressing this location uses contents of FSR to address data memory (not a physical register)								0000 0000	0000 0000
181h	OPTION	$\overline{\text{RBPU}}$	INTEDG	T0CS	T0SE	PSA	PS2	PS1	PS0	1111 1111	1111 1111
182h	PCL	Program Counter's (PC) Least Significant Byte								0000 0000	0000 0000
183h	STATUS	IRP	RP1	RP0	$\overline{\text{TO}}$	$\overline{\text{PD}}$	Z	DC	C	0001 1xxx	000q quuu
184h	FSR	Indirect data memory address pointer								xxxx xxxx	uuuu uuuu
185h	—	Unimplemented								—	—
186h	TRISB	PORTB Data Direction Register								1111 1111	1111 1111
187h	TRISF	PORTF Data Direction Register								1111 1111	1111 1111
188h	TRISG	PORTG Data Direction Register								1111 1111	1111 1111
189h	—	Unimplemented								—	—
18Ah	PCLATH	—	—	—	Write Buffer for the upper 5 bits of the PC					---0 0000	---0 0000
18Bh	INTCON	GIE	PEIE	T0IE	INTE	RBIE	T0IF	INTF	RBIF	0000 000x	0000 000u
18Ch	—	Unimplemented								—	—
18Dh	—	Unimplemented								—	—
18Eh	—	Unimplemented								—	—
18Fh	—	Unimplemented								—	—
190h	—	Unimplemented								—	—
191h	—	Unimplemented								—	—
192h	—	Unimplemented								—	—
193h	—	Unimplemented								—	—
194h	—	Unimplemented								—	—
195h	—	Unimplemented								—	—
196h	—	Unimplemented								—	—
197h	—	Unimplemented								—	—
198h	—	Unimplemented								—	—
199h	—	Unimplemented								—	—
19Ah	—	Unimplemented								—	—
19Bh	—	Unimplemented								—	—
19Ch	—	Unimplemented								—	—
19Dh	—	Unimplemented								—	—
19Eh	—	Unimplemented								—	—
19Fh	—	Unimplemented								—	—

Legend: x = unknown, u = unchanged, q = value depends on condition, - = unimplemented read as '0', shaded locations are unimplemented, read as '0'.

Note 1: Registers ADRES, ADCON0, and ADCON1 are not implemented in the PIC16C923, read as '0'.
2: These bits are reserved on the PIC16C923, always maintain these bits clear.
3: These pixels do not display, but can be used as general purpose RAM.
4: PIC16C923 reset values for PORTA: `--xx xxxx` for a POR, and `--uu uuuu` for all other resets, PIC16C924 reset values for PORTA: `--0x 0000` when read.
5: Bit1 of ADCON0 is reserved on the PIC16C924, always maintain this bit clear.

© 1997 Microchip Technology Inc.

4.2.2.1 STATUS REGISTER

The STATUS register, shown in Figure 4-3, contains the arithmetic status of the ALU, the RESET status and the bank select bits for data memory.

The STATUS register can be the destination for any instruction, as with any other register. If the STATUS register is the destination for an instruction that affects the Z, DC or C bits, then the write to these three bits is disabled. These bits are set or cleared according to the device logic. Furthermore, the $\overline{TO}$ and $\overline{PD}$ bits are not writable. Therefore, the result of an instruction with the STATUS register as destination may be different than intended.

For example, `CLRF STATUS` will clear the upper-three bits and set the Z bit. This leaves the STATUS register as `000u u1uu` (where u = unchanged).

It is recommended, therefore, that only `BCF`, `BSF`, `SWAPF` and `MOVWF` instructions are used to alter the STATUS register because these instructions do not affect the Z, C or DC bits from the STATUS register. For other instructions, not affecting any status bits, see the "Instruction Set Summary."

> **Note 1:** The C and DC bits operate as a $\overline{borrow}$ and $\overline{digit\ borrow}$ bit, respectively, in subtraction. See the `SUBLW` and `SUBWF` instructions for examples.

FIGURE 4-3: STATUS REGISTER (ADDRESS 03h, 83h, 103h, 183h)

R/W-0	R/W-0	R/W-0	R-1	R-1	R/W-x	R/W-x	R/W-x
IRP	RP1	RP0	$\overline{TO}$	$\overline{PD}$	Z	DC	C
bit7							bit0

R = Readable bit
W = Writable bit
U = Unimplemented bit, read as '0'
- n = Value at POR reset

bit 7: **IRP**: Register Bank Select bit (used for indirect addressing)
1 = Bank 2, 3 (100h - 1FFh)
0 = Bank 0, 1 (00h - FFh)

bit 6-5: **RP1:RP0**: Register Bank Select bits (used for direct addressing)
`11` = Bank 3 (180h - 1FFh)
`10` = Bank 2 (100h - 17Fh)
`01` = Bank 1 (80h - FFh)
`00` = Bank 0 (00h - 7Fh)

bit 4: **$\overline{TO}$**: Time-out bit
1 = After power-up, `CLRWDT` instruction, or `SLEEP` instruction
0 = A WDT time-out occurred

bit 3: **$\overline{PD}$**: Power-down bit
1 = After power-up or by the `CLRWDT` instruction
0 = By execution of the `SLEEP` instruction

bit 2: **Z**: Zero bit
1 = The result of an arithmetic or logic operation is zero
0 = The result of an arithmetic or logic operation is not zero

bit 1: **DC**: Digit carry/$\overline{borrow}$ bit (`ADDWF`, `ADDLW`, `SUBLW`, `SUBWF` instructions) (for $\overline{borrow}$ the polarity is reversed)
1 = A carry-out from the 4th low order bit of the result occurred
0 = No carry-out from the 4th low order bit of the result

bit 0: **C**: Carry/$\overline{borrow}$ bit (`ADDWF`, `ADDLW`, `SUBLW`, `SUBWF` instructions) (for $\overline{borrow}$ the polarity is reversed)
1 = A carry-out from the most significant bit of the result occurred
0 = No carry-out from the most significant bit of the result occurred
Note: A subtraction is executed by adding the two's complement of the second operand. For rotate (`RRF`, `RLF`) instructions, this bit is loaded with either the high or low order bit of the source register.

4.2.2.2 OPTION REGISTER

The OPTION register is a readable and writable register which contains various control bits to configure the TMR0/WDT prescaler, the external RB0/INT pin interrupt, TMR0, and the weak pull-ups on PORTB.

> **Note:** To achieve a 1:1 prescaler assignment for the TMR0 register, assign the prescaler to the Watchdog Timer.

FIGURE 4-4: OPTION REGISTER (ADDRESS 81h, 181h)

R/W-1	R/W-1	R/W-1	R/W-1	R/W-1	R/W-1	R/W-1	R/W-1
$\overline{\text{RBPU}}$	INTEDG	T0CS	T0SE	PSA	PS2	PS1	PS0
bit7							bit0

R = Readable bit
W = Writable bit
U = Unimplemented bit, read as '0'
- n = Value at POR reset

bit 7: **$\overline{\text{RBPU}}$**: PORTB Pull-up Enable bit
1 = PORTB pull-ups are disabled
0 = PORTB pull-ups are enabled by individual port latch values

bit 6: **INTEDG**: Interrupt Edge Select bit
1 = Interrupt on rising edge of RB0/INT pin
0 = Interrupt on falling edge of RB0/INT pin

bit 5: **T0CS**: TMR0 Clock Source Select bit
1 = Transition on RA4/T0CKI pin
0 = Internal instruction cycle clock (CLKOUT)

bit 4: **T0SE**: TMR0 Source Edge Select bit
1 = Increment on high-to-low transition on RA4/T0CKI pin
0 = Increment on low-to-high transition on RA4/T0CKI pin

bit 3: **PSA**: Prescaler Assignment bit
1 = Prescaler is assigned to the WDT
0 = Prescaler is assigned to the Timer0 module

bit 2-0: **PS2:PS0**: Prescaler Rate Select bits

Bit Value	TMR0 Rate	WDT Rate
000	1 : 2	1 : 1
001	1 : 4	1 : 2
010	1 : 8	1 : 4
011	1 : 16	1 : 8
100	1 : 32	1 : 16
101	1 : 64	1 : 32
110	1 : 128	1 : 64
111	1 : 256	1 : 128

© 1997 Microchip Technology Inc.

4.2.2.3 INTCON REGISTER

The INTCON Register is a readable and writable register which contains various enable and flag bits for the TMR0 register overflow, RB Port change and external RB0/INT pin interrupts.

> **Note:** Interrupt flag bits get set when an interrupt condition occurs regardless of the state of its corresponding enable bit or the global enable bit, GIE (INTCON<7>).

FIGURE 4-5: INTCON REGISTER (ADDRESS 0Bh, 8Bh, 10Bh, 18Bh)

R/W-0	R/W-0	R/W-0	R/W-0	R/W-0	R/W-0	R/W-0	R/W-x
GIE	PEIE	T0IE	INTE	RBIE	T0IF	INTF	RBIF
bit7							bit0

R = Readable bit
W = Writable bit
U = Unimplemented bit, read as '0'
- n = Value at POR reset

bit 7: **GIE:** Global Interrupt Enable bit
1 = Enables all un-masked interrupts
0 = Disables all interrupts

bit 6: **PEIE**: Peripheral Interrupt Enable bit
1 = Enables all un-masked peripheral interrupts
0 = Disables all peripheral interrupts

bit 5: **T0IE**: TMR0 Overflow Interrupt Enable bit
1 = Enables the TMR0 interrupt
0 = Disables the TMR0 interrupt

bit 4: **INTE**: RB0/INT External Interrupt Enable bit
1 = Enables the RB0/INT external interrupt
0 = Disables the RB0/INT external interrupt

bit 3: **RBIE**: RB Port Change Interrupt Enable bit
1 = Enables the RB port change interrupt
0 = Disables the RB port change interrupt

bit 2: **T0IF**: TMR0 Overflow Interrupt Flag bit
1 = TMR0 register has overflowed (must be cleared in software)
0 = TMR0 register did not overflow

bit 1: **INTF**: RB0/INT External Interrupt Flag bit
1 = The RB0/INT external interrupt occurred (must be cleared in software)
0 = The RB0/INT external interrupt did not occur

bit 0: **RBIF**: RB Port Change Interrupt Flag bit
1 = At least one of the RB7:RB4 pins changed state (see Section 5.2 to clear interrupt)
0 = None of the RB7:RB4 pins have changed state

> Interrupt flag bits get set when an interrupt condition occurs regardless of the state of its corresponding enable bit or the global enable bit, GIE (INTCON<7>). User software should ensure the appropriate interrupt flag bits are clear prior to enabling an interrupt.

4.2.2.4 PIE1 REGISTER

This register contains the individual enable bits for the peripheral interrupts.

> **Note:** Bit PEIE (INTCON<6>) must be set to enable any peripheral interrupt.

FIGURE 4-6: PIE1 REGISTER (ADDRESS 8Ch)

R/W-0	R/W-0	U-0	U-0	R/W-0	R/W-0	R/W-0	R/W-0
LCDIE	ADIE(1)	—	—	SSPIE	CCP1IE	TMR2IE	TMR1IE
bit7							bit0

R = Readable bit
W = Writable bit
U = Unimplemented bit, read as '0'
- n = Value at POR reset

bit 7: **LCDIE:** LCD Interrupt Enable bit
1 = Enables the LCD interrupt
0 = Disables the LCD interrupt

bit 6: **ADIE**: A/D Converter Interrupt Enable bit(1)
1 = Enables the A/D interrupt
0 = Disables the A/D interrupt

bit 5-4: **Unimplemented**: Read as '0'

bit 3: **SSPIE**: Synchronous Serial Port Interrupt Enable bit
1 = Enables the SSP interrupt
0 = Disables the SSP interrupt

bit 2: **CCP1IE**: CCP1 Interrupt Enable bit
1 = Enables the CCP1 interrupt
0 = Disables the CCP1 interrupt

bit 1: **TMR2IE**: TMR2 to PR2 Match Interrupt Enable bit
1 = Enables the TMR2 to PR2 match interrupt
0 = Disables the TMR2 to PR2 match interrupt

bit 0: **TMR1IE**: TMR1 Overflow Interrupt Enable bit
1 = Enables the TMR1 overflow interrupt
0 = Disables the TMR1 overflow interrupt

Note 1: Bit ADIE is reserved on the PIC16C923, always maintain this bit clear.

© 1997 Microchip Technology Inc.

4.2.2.5 PIR1 REGISTER

This register contains the individual flag bits for the peripheral interrupts.

> **Note:** Interrupt flag bits get set when an interrupt condition occurs regardless of the state of its corresponding enable bit or the global enable bit, GIE (INTCON<7>). User software should ensure the appropriate interrupt flag bits are clear prior to enabling an interrupt.

FIGURE 4-7: PIR1 REGISTER (ADDRESS 0Ch)

R/W-0	R/W-0	U-0	U-0	R/W-0	R/W-0	R/W-0	R/W-0
LCDIF	ADIF(1)	—	—	SSPIF	CCP1IF	TMR2IF	TMR1IF
bit7							bit0

R = Readable bit
W = Writable bit
U = Unimplemented bit, read as '0'
- n = Value at POR reset

bit 7: **LCDIF:** LCD Interrupt Flag bit
1 = LCD interrupt occurred (must be cleared in software)
0 = LCD interrupt did not occur

bit 6: **ADIF**: A/D Converter Interrupt Flag bit(1)
1 = An A/D conversion completed (must be cleared in software)
0 = The A/D conversion is not complete

bit 5-4: **Unimplemented**: Read as '0'

bit 3: **SSPIF**: Synchronous Serial Port Interrupt Flag bit
1 = The transmission/reception is complete (must be cleared in software)
0 = Waiting to transmit/receive

bit 2: **CCP1IF**: CCP1 Interrupt Flag bit
Capture Mode
1 = A TMR1 register capture occurred (must be cleared in software)
0 = No TMR1 register capture occurred
Compare Mode
1 = A TMR1 register compare match occurred (must be cleared in software)
0 = No TMR1 register compare match occurred
PWM Mode
Unused in this mode

bit 1: **TMR2IF**: TMR2 to PR2 Match Interrupt Flag bit
1 = TMR2 to PR2 match occurred (must be cleared in software)
0 = No TMR2 to PR2 match occurred

bit 0: **TMR1IF**: TMR1 Overflow Interrupt Flag bit
1 = TMR1 register overflowed (must be cleared in software)
0 = TMR1 register did not overflow

Note 1: Bit ADIF is reserved on the PIC16C923, always maintain this bit clear.

> Interrupt flag bits get set when an interrupt condition occurs regardless of the state of its corresponding enable bit or the global enable bit, GIE (INTCON<7>). User software should ensure the appropriate interrupt flag bits are clear prior to enabling an interrupt.

4.2.2.6 PCON REGISTER

The Power Control (PCON) register contains a flag bit to allow differentiation between a Power-on Reset (POR) to an external $\overline{MCLR}$ Reset or WDT Reset.

For various reset conditions see Table 14-4 and Table 14-5.

FIGURE 4-8: PCON REGISTER (ADDRESS 8Eh)

U-0	U-0	U-0	U-0	U-0	U-0	R/W-0	U-0
—	—	—	—	—	—	$\overline{POR}$	—
bit7							bit0

R = Readable bit
W = Writable bit
U = Unimplemented bit, read as '0'
- n = Value at POR reset

bit 7-2: **Unimplemented:** Read as '0'

bit 1: **$\overline{POR}$**: Power-on Reset Status bit
1 = No Power-on Reset occurred
0 = A Power-on Reset occurred (must be set in software after a Power-on Reset occurs)

bit 0: **Unimplemented:** Read as '0'

© 1997 Microchip Technology Inc.

4.3 PCL and PCLATH

The program counter (PC) is 13-bits wide. The low byte comes from the PCL register, which is a readable and writable register. The upper bits (PC<12:8>) are not readable, but are indirectly writable through the PCLATH register. On any reset, the upper bits of the PC will be cleared. Figure 4-9 shows the two situations for the loading of the PC. The upper example in the figure shows how the PC is loaded on a write to PCL (PCLATH<4:0> → PCH). The lower example in the figure shows how the PC is loaded during a `CALL` or `GOTO` instruction (PCLATH<4:3> → PCH).

FIGURE 4-9: LOADING OF PC IN DIFFERENT SITUATIONS

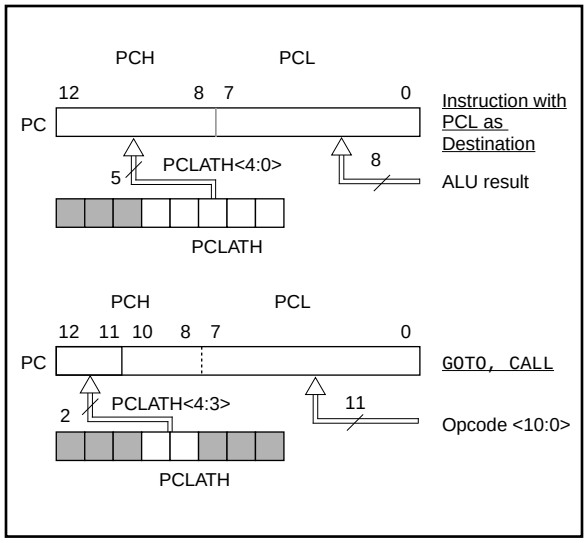

4.3.1 COMPUTED GOTO

A computed GOTO is accomplished by adding an offset to the program counter (`ADDWF PCL`). When doing a table read using a computed GOTO method, care should be exercised if the table location crosses a PCL memory boundary (each 256 byte block). Refer to the application note *"Implementing a Table Read"* (AN556).

4.3.2 STACK

The PIC16CXXX family has an 8 level deep x 13-bit wide hardware stack. The stack space is not part of either program or data space and the stack pointer is not readable or writable. The PC is PUSHed onto the stack when a `CALL` instruction is executed or an interrupt causes a branch. The stack is POPed in the event of a `RETURN`, `RETLW` or a `RETFIE` instruction execution. PCLATH is not affected by a PUSH or POP operation.

The stack operates as a circular buffer. This means that after the stack has been PUSHed eight times, the ninth push overwrites the value that was stored from the first push. The tenth push overwrites the second push (and so on).

Note 1: There are no status bits to indicate stack overflow or stack underflow conditions.

Note 2: There are no instructions/mnemonics called PUSH or POP. These are actions that occur from the execution of the `CALL`, `RETURN`, `RETLW`, and `RETFIE` instructions, or the vectoring to an interrupt address.

4.4 Program Memory Paging

PIC16C9XX devices are capable of addressing a continuous 8K word block of program memory. The `CALL` and `GOTO` instructions provide only 11 bits of address to allow branching within any 2K program memory page. When doing a `CALL` or `GOTO` instruction the upper 2 bits of the address are provided by PCLATH<4:3>. When doing a `CALL` or `GOTO` instruction, the user must ensure that the page select bits are programmed so that the desired program memory page is addressed. If a return from a `CALL` instruction (or interrupt) is executed, the entire 13-bit PC is pushed onto the stack. Therefore, manipulation of the PCLATH<4:3> bits are not required for the return instructions (which POPs the address from the stack).

Note: The PIC16C9XX ignores paging bit PCLATH<4>, which is used to access program memory pages 2 and 3. The use of PCLATH<4> as a general purpose read/write bit is not recommended since this may affect upward compatibility with future products.

Example 4-1 shows the calling of a subroutine in page 1 of the program memory. This example assumes that PCLATH is saved and restored by the interrupt service routine (if interrupts are used).

EXAMPLE 4-1: CALL OF A SUBROUTINE IN PAGE 1 FROM PAGE 0

```
ORG 0x500
BSF     PCLATH,3  ;Select page 1 (800h-FFFh)
CALL    SUB1_P1   ;Call subroutine in
        :         ;page 1 (800h-FFFh)
        :
        :
ORG 0x900
SUB1_P1:          ;called subroutine
        :         ;page 1 (800h-FFFh)
        :
RETURN            ;return to Call subroutine
                  ;in page 0 (000h-7FFh)
```

4.5 Indirect Addressing, INDF and FSR Registers

The INDF register is not a physical register. Addressing the INDF register will cause indirect addressing.

Indirect addressing is possible by using the INDF register. Any instruction using the INDF register actually accesses the register pointed to by the File Select Register (FSR). Reading the INDF register itself indirectly (FSR = '0') will produce 00h. Writing to the INDF register indirectly results in a no-operation (although status bits may be affected). An effective 9-bit address is obtained by concatenating the 8-bit FSR register and the IRP bit (STATUS<7>), as shown in Figure 4-10.

A simple program to clear RAM locations 20h-2Fh using indirect addressing is shown in Example 4-2.

EXAMPLE 4-2: INDIRECT ADDRESSING

```
         movlw  0x20   ;initialize pointer
         movwf  FSR    ;to RAM
NEXT     clrf   INDF   ;clear INDF register
         incf   FSR,F  ;inc pointer
         btfss  FSR,4  ;all done?
         goto   NEXT   ;no clear next
CONTINUE
         :              ;yes continue
```

FIGURE 4-10: DIRECT/INDIRECT ADDRESSING

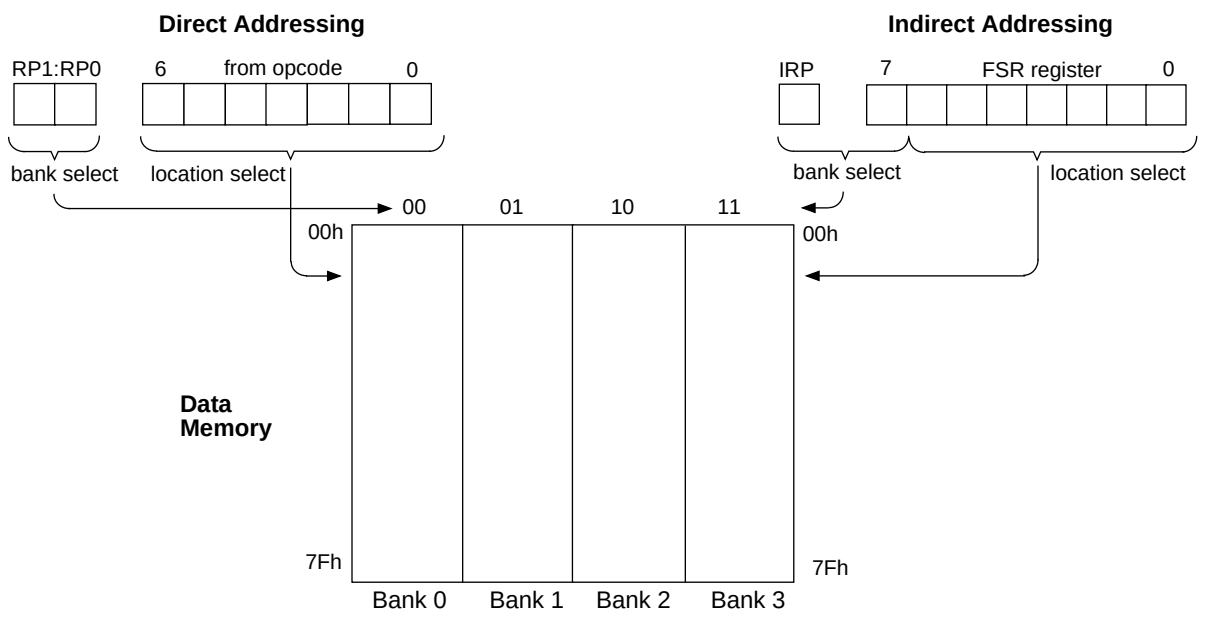

For memory map detail see Figure 4-2.

© 1997 Microchip Technology Inc.

5.0 PORTS

Some pins for these ports are multiplexed with an alternate function for the peripheral features on the device. In general, when a peripheral is enabled, that pin may not be used as a general purpose I/O pin.

5.1 PORTA and TRISA Register

The RA4/T0CKI pin is a Schmitt Trigger input and an open drain output. All other RA port pins have TTL input levels and full CMOS output drivers. All RA pins have data direction bits (TRISA register) which can configure these pins as output or input.

Setting a bit in the TRISA register puts the corresponding output driver in a hi-impedance mode. Clearing a bit in the TRISA register puts the contents of the output latch on the selected pin.

Reading the PORTA register reads the status of the pins whereas writing to it will write to the port latch. All write operations are read-modify-write operations. Therefore, a write to a port implies that the port pins are read, this value is modified, and then written to the port data latch.

Pin RA4 is multiplexed with the Timer0 module clock input to become the RA4/T0CKI pin.

For the PIC16C924 only, other PORTA pins are multiplexed with analog inputs and the analog VREF input. The operation of each pin is selected by clearing/setting the control bits in the ADCON1 register (A/D Control Register1).

Note:	On a Power-on Reset, these pins are configured as analog inputs and read as '0'.

The TRISA register controls the direction of the RA pins, even when they are being used as analog inputs. The user must ensure the bits in the TRISA register are maintained set when using them as analog inputs.

EXAMPLE 5-1: INITIALIZING PORTA

```
BCF     STATUS, RP0  ; Select Bank0
BCF     STATUS, RP1
CLRF    PORTA        ; Initialize PORTA
BSF     STATUS, RP0  ;
MOVLW   0xCF         ; Value used to
                     ; initialize data
                     ; direction
MOVWF   TRISA        ; Set RA<3:0> as inputs
                     ; RA<5:4> as outputs
                     ; RA<7:6> are always
                     ; read as '0'.
```

FIGURE 5-1: BLOCK DIAGRAM OF PINS RA3:RA0 AND RA5

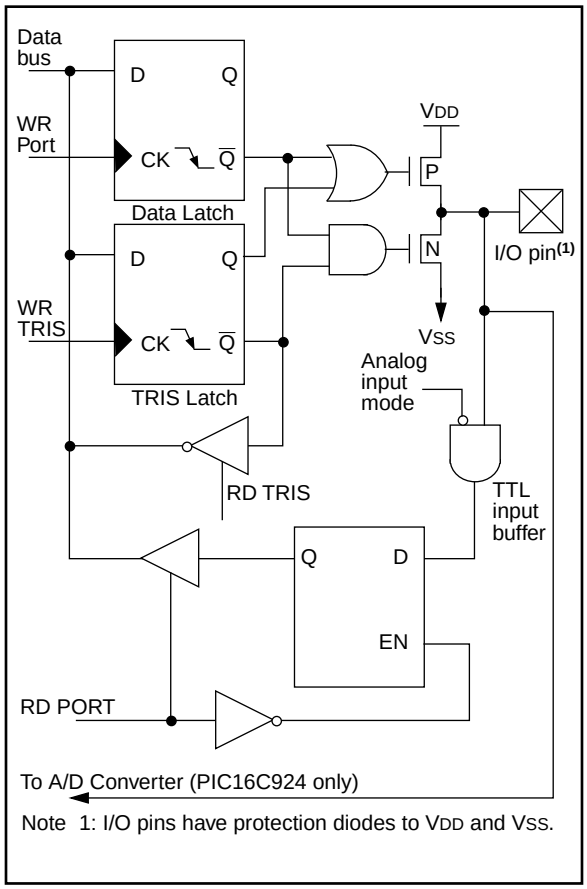

Note 1: I/O pins have protection diodes to VDD and VSS.

FIGURE 5-2: BLOCK DIAGRAM OF RA4/T0CKI PIN

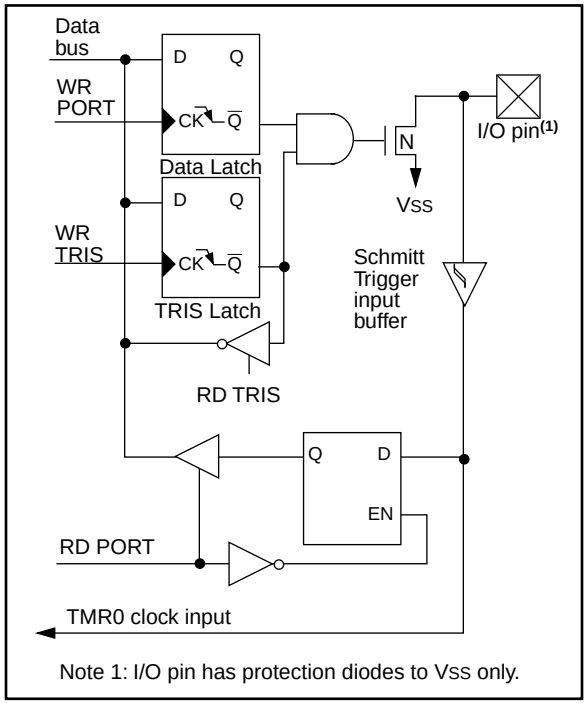

Note 1: I/O pin has protection diodes to VSS only.

TABLE 5-1: PORTA FUNCTIONS

Name	Bit#	Buffer	Function
RA0/AN0(1)	bit0	TTL	Input/output or analog input
RA1/AN1(1)	bit1	TTL	Input/output or analog input
RA2/AN2(1)	bit2	TTL	Input/output or analog input
RA3/AN3/VREF(1)	bit3	TTL	Input/output or analog input or VREF
RA4/T0CKI	bit4	ST	Input/output or external clock input for Timer0 Output is open drain type
RA5/AN4/$\overline{SS}$ (1)	bit5	TTL	Input/output or analog input or slave select input for synchronous serial port

Legend: TTL = TTL input, ST = Schmitt Trigger input
Note 1: The AN and VREF functions are for the A/D module and are only implemented on the PIC16C924.

TABLE 5-2: SUMMARY OF REGISTERS ASSOCIATED WITH PORTA

Address	Name	Bit 7	Bit 6	Bit 5	Bit 4	Bit 3	Bit 2	Bit 1	Bit 0	Value on Power-on Reset	Value on all other resets
05h	PORTA	—	—	RA5	RA4	RA3	RA2	RA1	RA0	(2)	(2)
85h	TRISA	—	—	PORTA Data Direction Control Register						`--11 1111`	`--11 1111`
9Fh(1)	ADCON1	—	—	—	—	—	PCFG2	PCFG1	PCFG0	`---- -000`	`---- -000`

Legend: x = unknown, u = unchanged, - = unimplemented locations read as '0'. Shaded cells are not used by PORTA.
Note 1: The ADCON1 register is implemented on the PIC16C924 only.
2: PIC16C923 reset values for PORTA: `--xx xxxx` for a POR, and `--uu uuuu` for all other resets,
PIC16C924 reset values for PORTA: `--0x 0000` when read.

© 1997 Microchip Technology Inc.

5.2 PORTB and TRISB Register

PORTB is an 8-bit wide bi-directional port. The corresponding data direction register is TRISB. Setting a bit in the TRISB register puts the corresponding output driver in a hi-impedance input mode. Clearing a bit in the TRISB register puts the contents of the output latch on the selected pin(s).

EXAMPLE 5-2: INITIALIZING PORTB

```
BCF     STATUS, RP0  ; Select Bank0
BCF     STATUS, RP1
CLRF    PORTB        ; Initialize PORTB
BSF     STATUS, RP0  ;
MOVLW   0xCF         ; Value used to
                     ; initialize data
                     ; direction
MOVWF   TRISB        ; Set RB<3:0> as inputs
                     ; RB<5:4> as outputs
                     ; RB<7:6> as inputs
```

Each of the PORTB pins has a weak internal pull-up. A single control bit can turn on all the pull-ups. This is performed by clearing bit $\overline{\text{RBPU}}$ (OPTION<7>). The weak pull-up is automatically turned off when the port pin is configured as an output. The pull-ups are also disabled on a Power-on Reset.

FIGURE 5-3: BLOCK DIAGRAM OF RB3:RB0 PINS

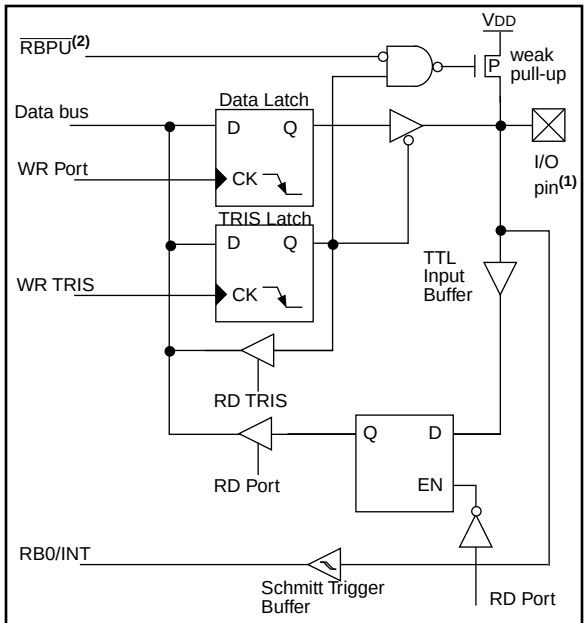

Note 1: I/O pins have diode protection to VDD and VSS.
2: To enable weak pull-ups, set the appropriate TRIS bit and clear the $\overline{\text{RBPU}}$ bit (OPTION<7>).

Four of PORTB's pins, RB7:RB4, have an interrupt on change feature. Only pins configured as inputs can cause this interrupt to occur (i.e. any RB7:RB4 pin configured as an output is excluded from the interrupt on change comparison). The input pins (of RB7:RB4) are compared with the old value latched on the last read of PORTB. The "mismatch" outputs of RB7:RB4 are OR'ed together to generate the RB Port Change Interrupt with flag bit RBIF (INTCON<0>).

This interrupt can wake the device from SLEEP. The user, in the interrupt service routine, can clear the interrupt in the following manner:

a) Any read or write of PORTB. This will end the mismatch condition.
b) Clear flag bit RBIF.

A mismatch condition will continue to set flag bit RBIF. Reading PORTB will end the mismatch condition, and allow flag bit RBIF to be cleared.

This interrupt on mismatch feature, together with software configurable pull-ups on these four pins allow easy interface to a keypad and make it possible for wake-up on key-depression. Refer to the *Embedded Control Handbook, "Implementing Wake-Up on Key Stroke"* (AN552).

The interrupt on change feature is recommended for wake-up on key depression operation and operations where PORTB is only used for the interrupt on change feature. Polling of PORTB is not recommended while using the interrupt on change feature.

FIGURE 5-4: BLOCK DIAGRAM OF RB7:RB4 PINS

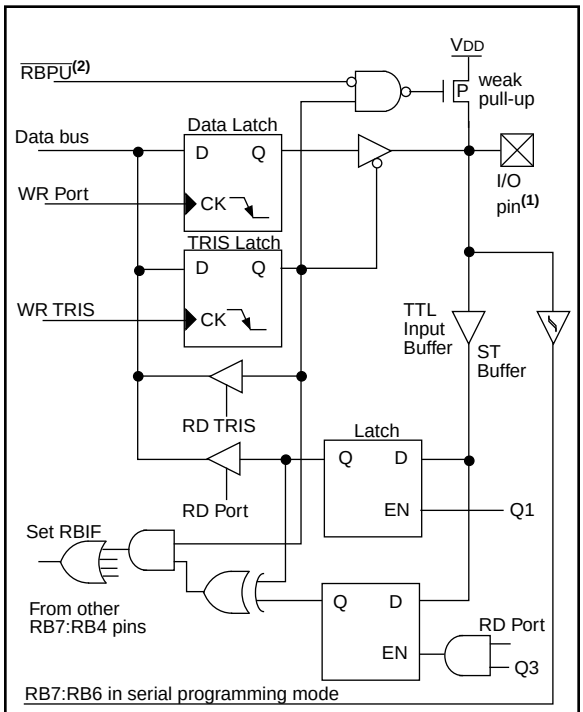

Note 1: I/O pins have diode protection to VDD and VSS.
2: To enable weak pull-ups, set the appropriate TRIS bit and clear the $\overline{\text{RBPU}}$ bit (OPTION<7>).

TABLE 5-3: PORTB FUNCTIONS

Name	Bit#	Buffer	Function
RB0/INT	bit0	TTL/ST	Input/output pin or external interrupt input. Internal software programmable weak pull-up. This buffer is a Schmitt Trigger input when configured as the external interrupt.
RB1	bit1	TTL	Input/output pin. Internal software programmable weak pull-up.
RB2	bit2	TTL	Input/output pin. Internal software programmable weak pull-up.
RB3	bit3	TTL	Input/output pin. Internal software programmable weak pull-up.
RB4	bit4	TTL	Input/output pin (with interrupt on change). Internal software programmable weak pull-up.
RB5	bit5	TTL	Input/output pin (with interrupt on change). Internal software programmable weak pull-up.
RB6	bit6	TTL/ST	Input/output pin (with interrupt on change). Internal software programmable weak pull-up. Serial programming clock. This buffer is a Schmitt Trigger input when used in serial programming mode.
RB7	bit7	TTL/ST	Input/output pin (with interrupt on change). Internal software programmable weak pull-up. Serial programming data. This buffer is a Schmitt Trigger input when used in serial programming mode.

Legend: TTL = TTL input, ST = Schmitt Trigger input

TABLE 5-4: SUMMARY OF REGISTERS ASSOCIATED WITH PORTB

Address	Name	Bit 7	Bit 6	Bit 5	Bit 4	Bit 3	Bit 2	Bit 1	Bit 0	Value on Power-on Reset	Value on all other resets
06h, 106h	PORTB	RB7	RB6	RB5	RB4	RB3	RB2	RB1	RB0	xxxx xxxx	uuuu uuuu
86h, 186h	TRISB	PORTB Data Direction Control Register								1111 1111	1111 1111
81h, 181h	OPTION	$\overline{\text{RBPU}}$	INTEDG	T0CS	T0SE	PSA	PS2	PS1	PS0	1111 1111	1111 1111

Legend: x = unknown, u = unchanged. Shaded cells are not used by PORTB.

© 1997 Microchip Technology Inc.

5.3 PORTC and TRISC Register

PORTC is an 6-bit bi-directional port. Each pin is individually configurable as an input or output through the TRISC register. PORTC is multiplexed with several peripheral functions (Table 5-5). PORTC pins have Schmitt Trigger input buffers.

When enabling peripheral functions, care should be taken in defining TRIS bits for each PORTC pin. Some peripherals override the TRIS bit to make a pin an output, while other peripherals override the TRIS bit to make a pin an input. Since the TRIS bit override is in effect while the peripheral is enabled, read-modify-write instructions (`BSF, BCF, XORWF`) with TRISC as destination should be avoided. The user should refer to the corresponding peripheral section for the correct TRIS bit settings.

EXAMPLE 5-3: INITIALIZING PORTC

```
BCF     STATUS,RP0 ; Select Bank0
BCF     STATUS,RP1
CLRF    PORTC      ; Initialize PORTC
BSF     STATUS,RP0 ;
MOVLW   0xCF       ; Value used to
                   ; initialize data
                   ; direction
MOVWF   TRISC      ; Set RC<3:0> as inputs
                   ; RC<5:4> as outputs
                   ; RC<7:6> always read 0
```

FIGURE 5-5: PORTC BLOCK DIAGRAM (PERIPHERAL OUTPUT OVERRIDE)

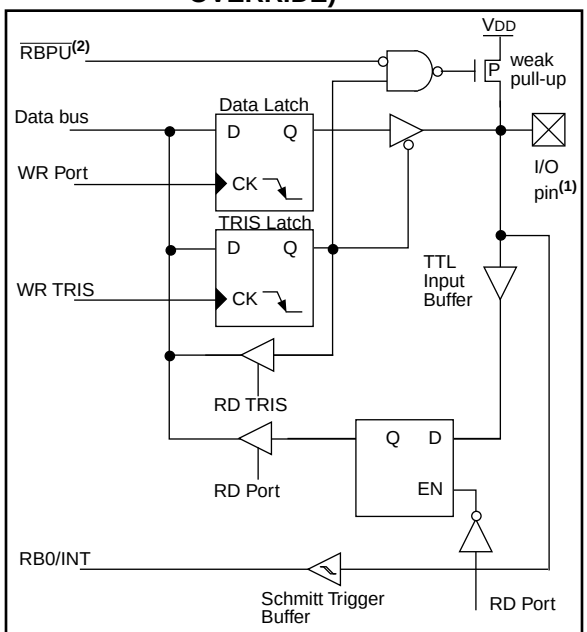

Note 1: I/O pins have diode protection to VDD and VSS.
2: To enable weak pull-ups, set the appropriate TRIS bit(s) and clear the RBPU bit (OPTION<7>).

TABLE 5-5: PORTC FUNCTIONS

Name	Bit#	Buffer Type	Function
RC0/T1OSO/T1CKI	bit0	ST	Input/output port pin or Timer1 oscillator output or Timer1 clock input
RC1/T1OSI	bit1	ST	Input/output port pin or Timer1 oscillator input
RC2/CCP1	bit2	ST	Input/output port pin or Capture input/Compare output/PWM output
RC3/SCK/SCL	bit3	ST	Input/output port pin or the synchronous serial clock for both SPI and I^2C modes.
RC4/SDI/SDA	bit4	ST	Input/output port pin or the SPI Data In (SPI mode) or data I/O (I^2C mode).
RC5/SDO	bit5	ST	Input/output port pin or Synchronous Serial Port data out

Legend: ST = Schmitt Trigger input

TABLE 5-6: SUMMARY OF REGISTERS ASSOCIATED WITH PORTC

Address	Name	Bit 7	Bit 6	Bit 5	Bit 4	Bit 3	Bit 2	Bit 1	Bit 0	Value on Power-on Reset	Value on all other resets
07h	PORTC	—	—	RC5	RC4	RC3	RC2	RC1	RC0	`--xx xxxx`	`--uu uuuu`
87h	TRISC	—	—	PORTC Data Direction Control Register						`--11 1111`	`--11 1111`

Legend: x = unknown, u = unchanged, - = unimplemented, read as '0'. Shaded cells are not used by PORTC.

5.4 PORTD and TRISD Registers

PORTD is an 8-bit port with Schmitt Trigger input buffers. The first five pins are configurable as general purpose I/O pins or LCD segment drivers. Pins RD5, RD6 and RD7 can be digital inputs or LCD segment or common drivers.

TRISD controls the direction of pins RD0 through RD4 when PORTD is configured as a digital port.

Note:	On a Power-on Reset these pins are configured as LCD segment drivers.

Note:	To configure the pins as a digital port, the corresponding bits in the LCDSE register must be cleared. Any bit set in the LCDSE register overrides any bit settings in the corresponding TRIS register.

EXAMPLE 5-4: INITIALIZING PORTD

```
BCF   STATUS,RP0   ;Select Bank2
BSF   STATUS,RP1   ;
BCF   LCDSE,SE29   ;Make RD<7:5> digital
BCF   LCDSE,SE0    ;Make RD<4:0> digital
BSF   STATUS,RP0   ;Select Bank1
BCF   STATUS,RP1   ;
MOVLW 0x07         ;Make RD<4:0> outputs
MOVWF TRISD        ;Make RD<7:5> inputs
```

FIGURE 5-6: PORTD<4:0> BLOCK DIAGRAM

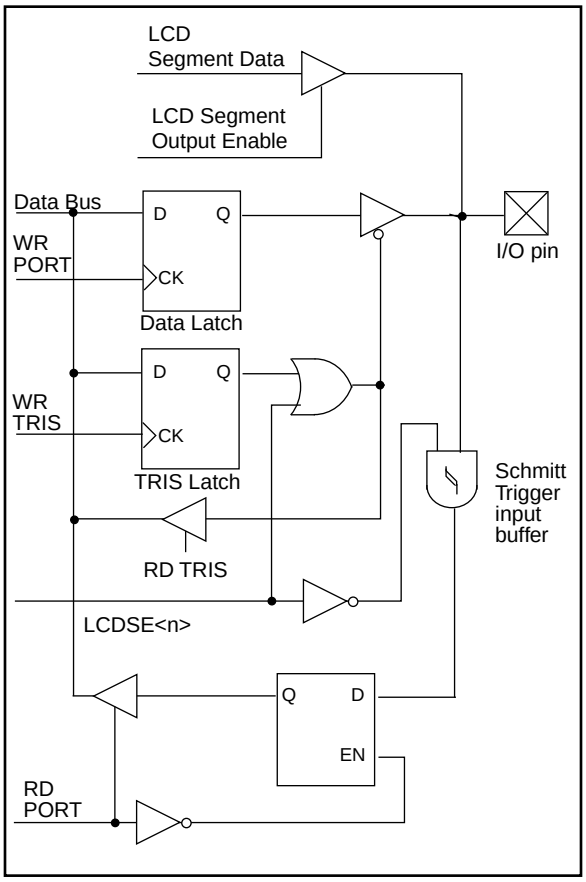

© 1997 Microchip Technology Inc.

FIGURE 5-7: PORTD<7:5> BLOCK DIAGRAM

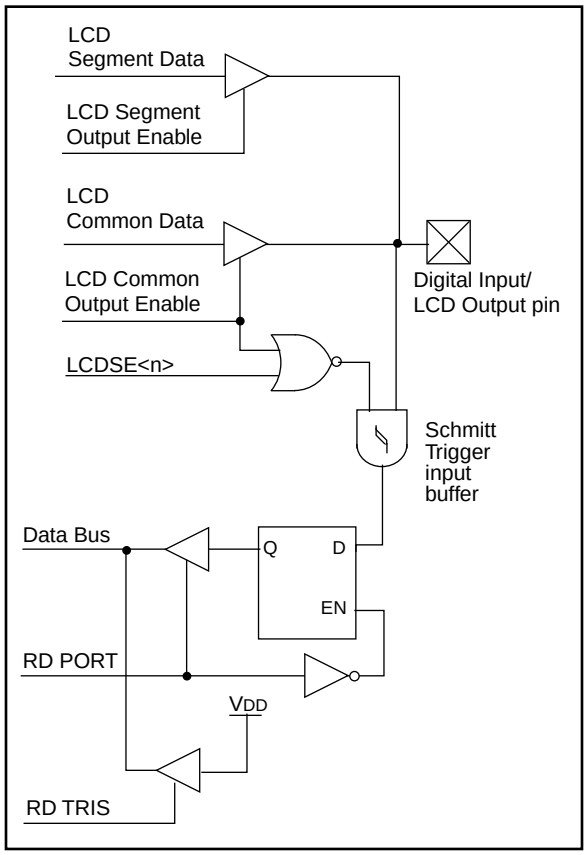

TABLE 5-7: PORTD FUNCTIONS

Name	Bit#	Buffer Type	Function
RD0/SEG00	bit0	ST	Input/output port pin or Segment Driver00
RD1/SEG01	bit1	ST	Input/output port pin or Segment Driver01
RD2/SEG02	bit2	ST	Input/output port pin or Segment Driver02
RD3/SEG03	bit3	ST	Input/output port pin or Segment Driver03
RD4/SEG04	bit4	ST	Input/output port pin or Segment Driver04
RD5/SEG29/COM3	bit5	ST	Digital input pin or Segment Driver29 or Common Driver3
RD6/SEG30/COM2	bit6	ST	Digital input pin or Segment Driver30 or Common Driver2
RD7/SEG31/COM1	bit7	ST	Digital input pin or Segment Driver31 or Common Driver1

Legend: ST = Schmitt Trigger input

TABLE 5-8: SUMMARY OF REGISTERS ASSOCIATED WITH PORTD

Address	Name	Bit 7	Bit 6	Bit 5	Bit 4	Bit 3	Bit 2	Bit 1	Bit 0	Value on Power-on Reset	Value on all other resets
08h	PORTD	RD7	RD6	RD5	RD4	RD3	RD2	RD1	RD0	0000 0000	0000 0000
88h	TRISD	PORTD Data Direction Control Register								1111 1111	1111 1111
10Dh	LCDSE	SE29	SE27	SE20	SE16	SE12	SE9	SE5	SE0	1111 1111	1111 1111

Legend: Shaded cells are not used by PORTD.

5.5 PORTE and TRISE Register

PORTE is an digital input only port. Each pin is multiplexed with an LCD segment driver. These pins have Schmitt Trigger input buffers.

Note 1: On a Power-on Reset these pins are configured as LCD segment drivers.

Note 2: To configure the pins as a digital port, the corresponding bits in the LCDSE register must be cleared. Any bit set in the LCDSE register overrides any bit settings in the corresponding TRIS register.

EXAMPLE 5-5: INITIALIZING PORTE

```
BCF STATUS,RP0     ;Select Bank2
BSF STATUS,RP1     ;
BCF LCDSE,SE27     ;Make all PORTE
BCF LCDSE,SE5      ;and PORTG<7>
BCF LCDSE,SE9      ;digital inputs
```

FIGURE 5-8: PORTE BLOCK DIAGRAM

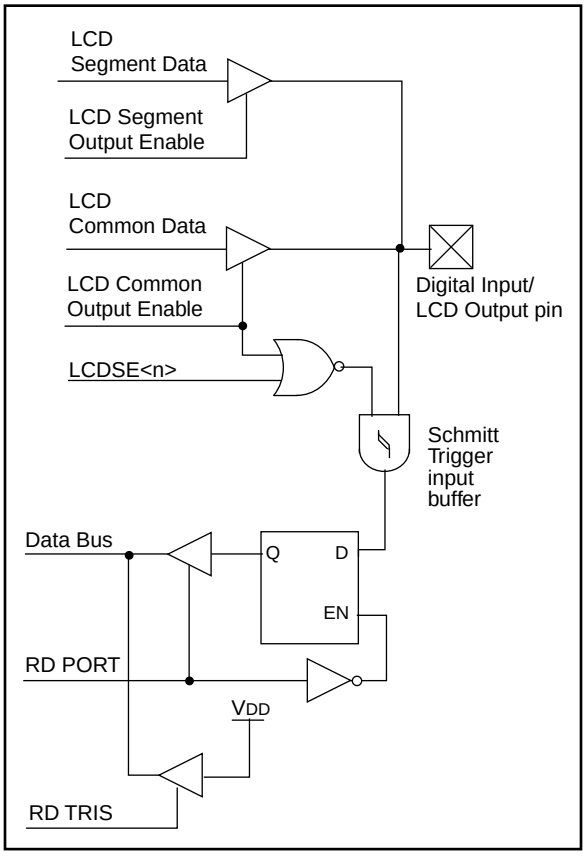

TABLE 5-9: PORTE FUNCTIONS

Name	Bit#	Buffer Type	Function
RE0/SEG05	bit0	ST	Digital input or Segment Driver05
RE1/SEG06	bit1	ST	Digital input or Segment Driver06
RE2/SEG07	bit2	ST	Digital input or Segment Driver07
RE3/SEG08	bit3	ST	Digital input or Segment Driver08
RE4/SEG09	bit4	ST	Digital input or Segment Driver09
RE5/SEG10	bit5	ST	Digital input or Segment Driver10
RE6/SEG11	bit6	ST	Digital input or Segment Driver11
RE7/SEG27	bit7	ST	Digital input or Segment Driver27 (not available on 64-pin devices)

Legend: ST = Schmitt Trigger input

TABLE 5-10: SUMMARY OF REGISTERS ASSOCIATED WITH PORTE

Address	Name	Bit 7	Bit 6	Bit 5	Bit 4	Bit 3	Bit 2	Bit 1	Bit 0	Value on Power-on Reset	Value on all other resets
09h	PORTE	RE7	RE6	RE5	RE4	RE3	RE2	RE1	RE0	0000 0000	0000 0000
89h	TRISE	PORTE Data Direction Control Register								1111 1111	1111 1111
10Dh	LCDSE	SE29	SE27	SE20	SE16	SE12	SE9	SE5	SE0	1111 1111	1111 1111

Legend: Shaded cells are not used by PORTE.

© 1997 Microchip Technology Inc.

5.6 PORTF and TRISF Register

PORTF is an digital input only port. Each pin is multiplexed with an LCD segment driver. These pins have Schmitt Trigger input buffers.

Note 1: On a Power-on Reset these pins are configured as LCD segment drivers.

Note 2: To configure the pins as a digital port, the corresponding bits in the LCDSE register must be cleared. Any bit set in the LCDSE register overrides any bit settings in the corresponding TRIS register.

EXAMPLE 5-6: INITIALIZING PORTF

```
BCF STATUS,RP0     ;Select Bank2
BSF STATUS,RP1     ;
BCF LCDSE,SE16     ;Make all PORTF
BCF LCDSE,SE12     ;digital inputs
```

FIGURE 5-9: PORTF BLOCK DIAGRAM

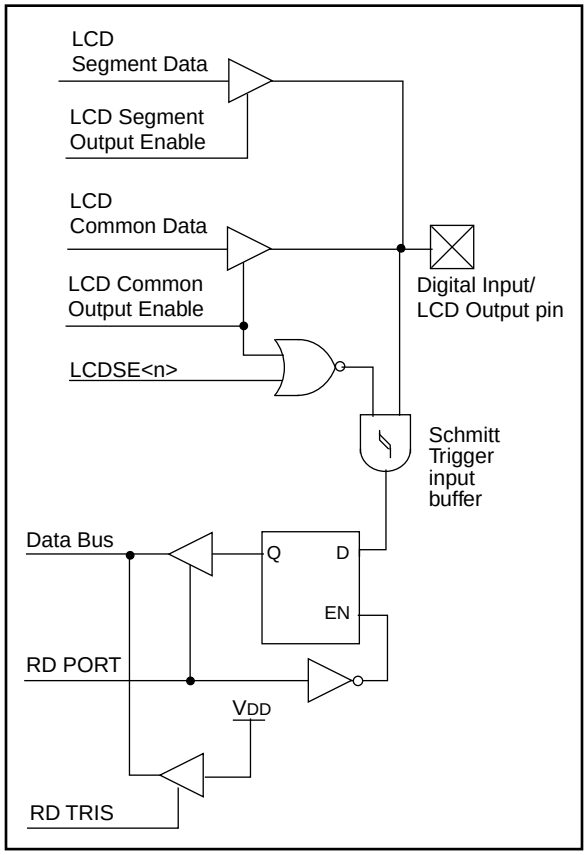

TABLE 5-11: PORTF FUNCTIONS

Name	Bit#	Buffer Type	Function
RF0/SEG12	bit0	ST	Digital input or Segment Driver12
RF1/SEG13	bit1	ST	Digital input or Segment Driver13
RF2/SEG14	bit2	ST	Digital input or Segment Driver14
RF3/SEG15	bit3	ST	Digital input or Segment Driver15
RF4/SEG16	bit4	ST	Digital input or Segment Driver16
RF5/SEG17	bit5	ST	Digital input or Segment Driver17
RF6/SEG18	bit6	ST	Digital input or Segment Driver18
RF7/SEG19	bit7	ST	Digital input or Segment Driver19

Legend: ST = Schmitt Trigger input

TABLE 5-12: SUMMARY OF REGISTERS ASSOCIATED WITH PORTF

Address	Name	Bit 7	Bit 6	Bit 5	Bit 4	Bit 3	Bit 2	Bit 1	Bit 0	Value on Power-on Reset	Value on all other resets
107h	PORTF	RF7	RF6	RF5	RF4	RF3	RF2	RF1	RF0	0000 0000	0000 0000
187h	TRISF	PORTF Data Direction Control Register								1111 1111	1111 1111
10Dh	LCDSE	SE29	SE27	SE20	SE16	SE12	SE9	SE5	SE0	1111 1111	1111 1111

Legend: Shaded cells are not used by PORTF.

5.7 PORTG and TRISG Register

PORTG is an digital input only port. Each pin is multiplexed with an LCD segment driver. These pins have Schmitt Trigger input buffers.

Note 1: On a Power-on Reset these pins are configured as LCD segment drivers.

Note 2: To configure the pins as a digital port, the corresponding bits in the LCDSE register must be cleared. Any bit set in the LCDSE register overrides any bit settings in the corresponding TRIS register.

EXAMPLE 5-7: INITIALIZING PORTG

```
BCF STATUS,RP0     ;Select Bank2
BSF STATUS,RP1     ;
BCF LCDSE,SE27     ;Make all PORTG
BCF LCDSE,SE20     ;and PORTE<7>
                   ;digital inputs
```

FIGURE 5-10: PORTG BLOCK DIAGRAM

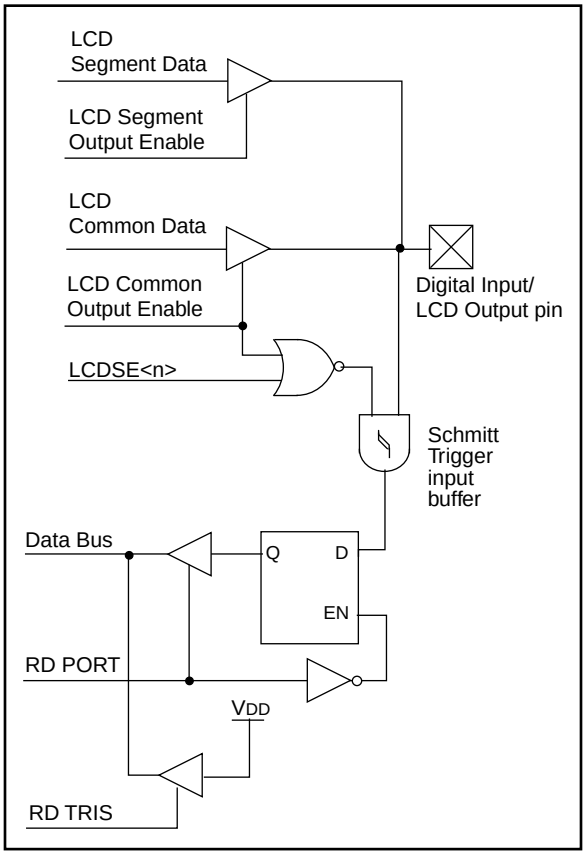

TABLE 5-13: PORTG FUNCTIONS

Name	Bit#	Buffer Type	Function
RG0/SEG20	bit0	ST	Digital input or Segment Driver20
RG1/SEG21	bit1	ST	Digital input or Segment Driver21
RG2/SEG22	bit2	ST	Digital input or Segment Driver22
RG3/SEG23	bit3	ST	Digital input or Segment Driver23
RG4/SEG24	bit4	ST	Digital input or Segment Driver24
RG5/SEG25	bit5	ST	Digital input or Segment Driver25
RG6/SEG26	bit6	ST	Digital input or Segment Driver26
RG7/SEG28	bit7	ST	Digital input or Segment Driver28 (not available on 64-pin devices)

Legend: ST = Schmitt Trigger input

TABLE 5-14: SUMMARY OF REGISTERS ASSOCIATED WITH PORTG

Address	Name	Bit 7	Bit 6	Bit 5	Bit 4	Bit 3	Bit 2	Bit 1	Bit 0	Value on Power-on Reset	Value on all other resets
108h	PORTG	RG7	RG6	RG5	RG4	RG3	RG2	RG1	RG0	0000 0000	0000 0000
188h	TRISG	PORTG Data Direction Control Register								1111 1111	1111 1111
10Dh	LCDSE	SE29	SE27	SE20	SE16	SE12	SE9	SE5	SE0	1111 1111	1111 1111

Legend: Shaded cells are not used by PORTG.

© 1997 Microchip Technology Inc.

5.8 I/O Programming Considerations

5.8.1 BI-DIRECTIONAL I/O PORTS

Any instruction which writes, operates internally as a read followed by a write operation. The BCF and BSF instructions, for example, read the register into the CPU, execute the bit operation and write the result back to the register. Caution must be used when these instructions are applied to a port with both inputs and outputs defined. For example, a BSF operation on bit5 of PORTB will cause all eight bits of PORTB to be read into the CPU. Then the BSF operation takes place on bit5 and PORTB is written to the output latches. If another bit of PORTB is used as a bi-directional I/O pin (e.g., bit0) and it is defined as an input at this time, the input signal present on the pin itself would be read into the CPU and rewritten to the data latch of this particular pin, overwriting the previous content. As long as the pin stays in the input mode, no problem occurs. However, if bit0 is switched into output mode later on, the contents of the data latch may now be unknown.

Reading the port register, reads the values of the port pins. Writing to the port register writes the value to the port latch. When using read-modify-write instructions (ex. BCF, BSF) on a port, the value of the port pins is read, the desired operation is done to this value, and this value is then written to the port latch.

Example 5-8 shows the effect of two sequential read-modify-write instructions on an I/O port.

EXAMPLE 5-8: READ-MODIFY-WRITE INSTRUCTIONS ON AN I/O PORT

```
;Initial PORT settings: PORTB<7:4> Inputs
;                       PORTB<3:0> Outputs
;PORTB<7:6> have external pull-ups and are
;not connected to other circuitry
;
;                    PORT latch  PORT pins
;                    ----------  ---------
  BCF PORTB, 7    ; 01pp pppp    11pp pppp
  BCF PORTB, 6    ; 10pp pppp    11pp pppp
  BCF STATUS, RP1 ;
  BSF STATUS, RP0 ;
  BCF TRISB, 7    ; 10pp pppp    11pp pppp
  BCF TRISB, 6    ; 10pp pppp    10pp pppp
;
;Note that the user may have expected the
;pin values to be 00pp ppp. The 2nd BCF
;caused RB7 to be latched as the pin value
;(high).
```

A pin actively outputting a Low or High should not be driven from external devices at the same time in order to change the level on this pin (“wired-or”, “wired-and”). The resulting high output currents may damage the chip.

5.8.2 SUCCESSIVE OPERATIONS ON I/O PORTS

The actual write to an I/O port happens at the end of an instruction cycle, whereas for reading, the data must be valid at the beginning of the instruction cycle (Figure 5-11). Therefore, care must be exercised if a write followed by a read operation is carried out on the same I/O port. The sequence of instructions should be such to allow the pin voltage to stabilize (load dependent) before the next instruction which causes that file to be read into the CPU is executed. Otherwise, the previous state of that pin may be read into the CPU rather than the new state. When in doubt, it is better to separate these instructions with a NOP or another instruction not accessing this I/O port.

FIGURE 5-11: SUCCESSIVE I/O OPERATION

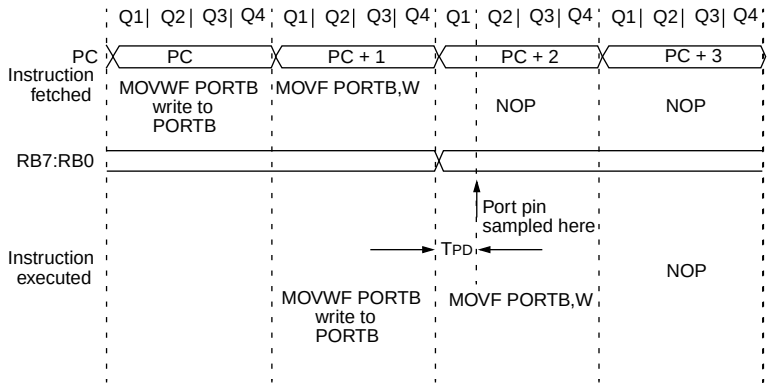

Note:

This example shows a write to PORTB followed by a read from PORTB.

Note that:

data setup time = (0.25TCY - TPD)

where TCY = instruction cycle
TPD = propagation delay

Therefore, at higher clock frequencies, a write followed by a read may be problematic.

NOTES:

© 1997 Microchip Technology Inc.

6.0 OVERVIEW OF TIMER MODULES

Each module can generate an interrupt to indicate that an event has occurred (e.g. timer overflow). Each of these modules is explained in full detail in the following sections. The timer modules are:

- Timer0 Module (Section 7.0)
- Timer1 Module (Section 8.0)
- Timer2 Module (Section 9.0)

6.1 Timer0 Overview

The Timer0 module is a simple 8-bit timer/counter. The clock source can be either the internal system clock (Fosc/4) or an external clock. When the clock source is an external clock, the Timer0 module can be selected to increment on either the rising or falling edge.

The Timer0 module also has a programmable prescaler option. This prescaler can be assigned to either the Timer0 module or the Watchdog Timer. Bit PSA (OPTION<3>) assigns the prescaler, and bits PS2:PS0 (OPTION<2:0>) determine the prescaler value. Timer0 can increment at the following rates: 1:1 when prescaler assigned to Watchdog timer, 1:2, 1:4, 1:8, 1:16, 1:32, 1:64, 1:128, and 1:256.

Synchronization of the external clock occurs after the prescaler. When the prescaler is used, the external clock frequency may be higher then the device's frequency. The maximum frequency is 50 MHz, given the high and low time requirements of the clock.

6.2 Timer1 Overview

Timer1 is a 16-bit timer/counter. The clock source can be either the internal system clock (Fosc/4), an external clock, or an external crystal. Timer1 can operate as either a timer or a counter. When operating as a counter (external clock source), the counter can either operate synchronized to the device or asynchronously to the device. Asynchronous operation allows Timer1 to operate during sleep, which is useful for applications that require a real-time clock as well as the power savings of SLEEP mode.

Timer1 also has a prescaler option which allows Timer1 to increment at the following rates: 1:1, 1:2, 1:4, and 1:8. Timer1 can be used in conjunction with the Capture/Compare/PWM module. When used with a CCP module, Timer1 is the time-base for 16-bit capture or the 16-bit compare and must be synchronized to the device. Timer1 oscillator is also one of the clock sources for the LCD module.

6.3 Timer2 Overview

Timer2 is an 8-bit timer with a programmable prescaler and postscaler, as well as an 8-bit period register (PR2). Timer2 can be used with the CCP1 module (in PWM mode) as well as the clock source for the Synchronous Serial Port (SSP). The prescaler option allows Timer2 to increment at the following rates: 1:1, 1:4, 1:16.

The postscaler allows the TMR2 register to match the period register (PR2) a programmable number of times before generating an interrupt. The postscaler can be programmed from 1:1 to 1:16 (inclusive).

6.4 CCP Overview

The CCP module can operate in one of these three modes: 16-bit capture, 16-bit compare, or up to 10-bit Pulse Width Modulation (PWM).

Capture mode captures the 16-bit value of TMR1 into the CCPR1H:CCPR1L register pair. The capture event can be programmed for either the falling edge, rising edge, fourth rising edge, or the sixteenth rising edge of the CCP1 pin.

Compare mode compares the TMR1H:TMR1L register pair to the CCPR1H:CCPR1L register pair. When a match occurs an interrupt can be generated, and the output pin CCP1 can be forced to given state (High or Low), TMR1 can be reset and start A/D conversion. This depends on the control bits CCP1M3:CCP1M0.

PWM mode compares the TMR2 register to a 10-bit duty cycle register (CCPR1H:CCPR1L<5:4>) as well as to an 8-bit period register (PR2). When the TMR2 register = Duty Cycle register, the CCP1 pin will be forced low. When TMR2 = PR2, TMR2 is cleared to 00h, an interrupt can be generated, and the CCP1 pin (if an output) will be forced high.

© 1997 Microchip Technology Inc.

NOTES:

© 1997 Microchip Technology Inc.

7.0 TIMER0 MODULE

The Timer0 module has the following features:

- 8-bit timer/counter
- Readable and writable
- 8-bit software programmable prescaler
- Internal or external clock select
- Interrupt on overflow from FFh to 00h
- Edge select for external clock

Figure 7-1 is a simplified block diagram of the Timer0 module.

Timer mode is selected by clearing bit T0CS (OPTION<5>). In timer mode, the Timer0 module will increment every instruction cycle (without prescaler). If the TMR0 register is written, the increment is inhibited for the following two instruction cycles (Figure 7-2 and Figure 7-3). The user can work around this by writing an adjusted value to the TMR0 register.

Counter mode is selected by setting bit T0CS (OPTION<5>). In counter mode Timer0 will increment either on every rising or falling edge of pin RA4/T0CKI. The incrementing edge is determined by the Timer0 Source Edge Select bit T0SE (OPTION<4>). Clearing bit T0SE selects the rising edge. Restrictions on the external clock input are discussed in detail in Section 7.2.

The prescaler is mutually exclusively shared between the Timer0 module and the Watchdog Timer. The prescaler assignment is controlled in software by control bit PSA (OPTION<3>). Clearing bit PSA will assign the prescaler to the Timer0 module. The prescaler is not readable or writable. When the prescaler is assigned to the Timer0 module, prescale values of 1:2, 1:4, ..., 1:256 are selectable. Section 7.3 details the operation of the prescaler.

7.1 Timer0 Interrupt

The TMR0 interrupt is generated when the TMR0 register overflows from FFh to 00h. This overflow sets bit T0IF (INTCON<2>). The interrupt can be masked by clearing bit T0IE (INTCON<5>). Bit T0IF must be cleared in software by the Timer0 module interrupt service routine before re-enabling this interrupt. The TMR0 interrupt cannot awaken the processor from SLEEP since the timer is shut off during SLEEP. Figure 7-4 displays the Timer0 interrupt timing.

FIGURE 7-1: TIMER0 BLOCK DIAGRAM

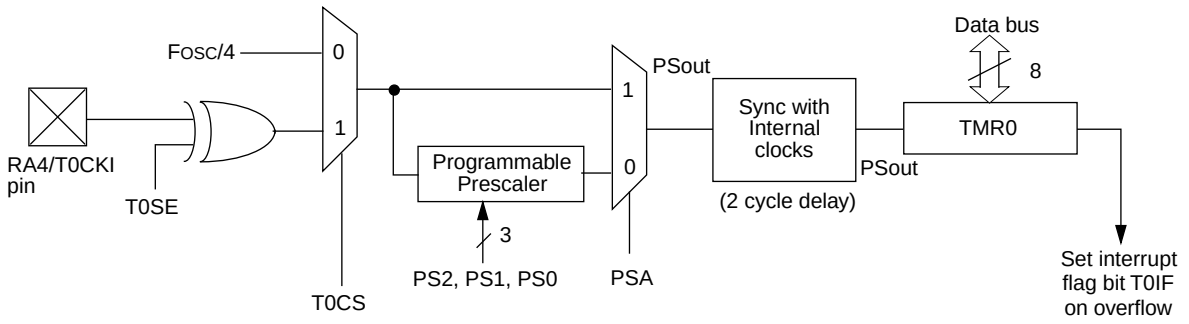

Note 1: T0CS, T0SE, PSA, PS2:PS0 (OPTION<5:0>).
2: The prescaler is shared with Watchdog Timer (refer to Figure 7-6 for detailed block diagram).

FIGURE 7-2: TIMER0 TIMING: INTERNAL CLOCK/NO PRESCALE

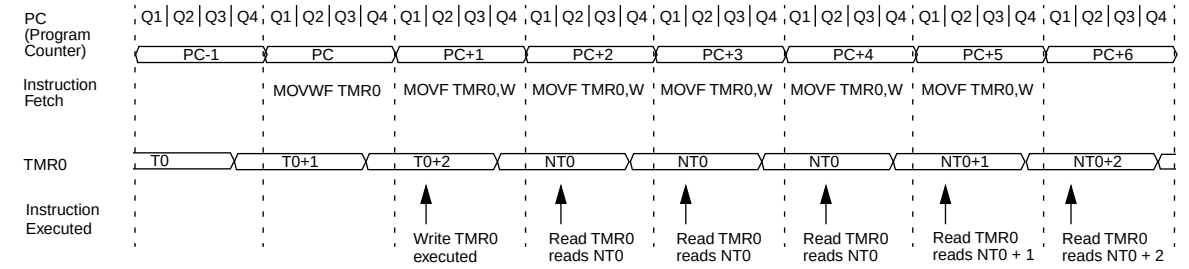

FIGURE 7-3: TIMER0 TIMING: INTERNAL CLOCK/PRESCALE 1:2

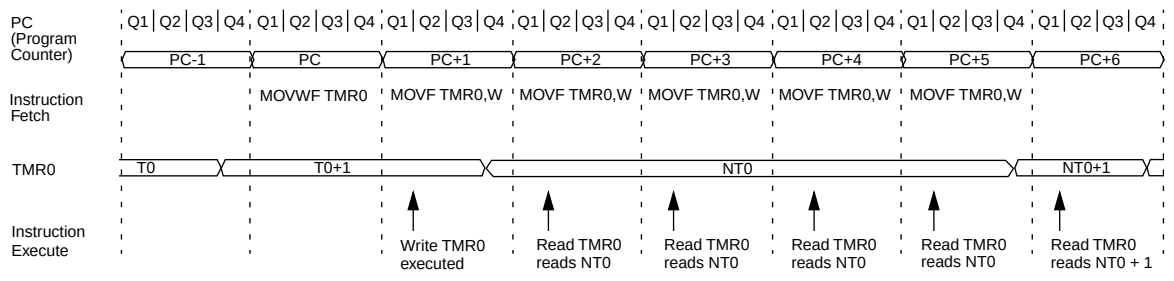

FIGURE 7-4: TIMER0 INTERRUPT TIMING

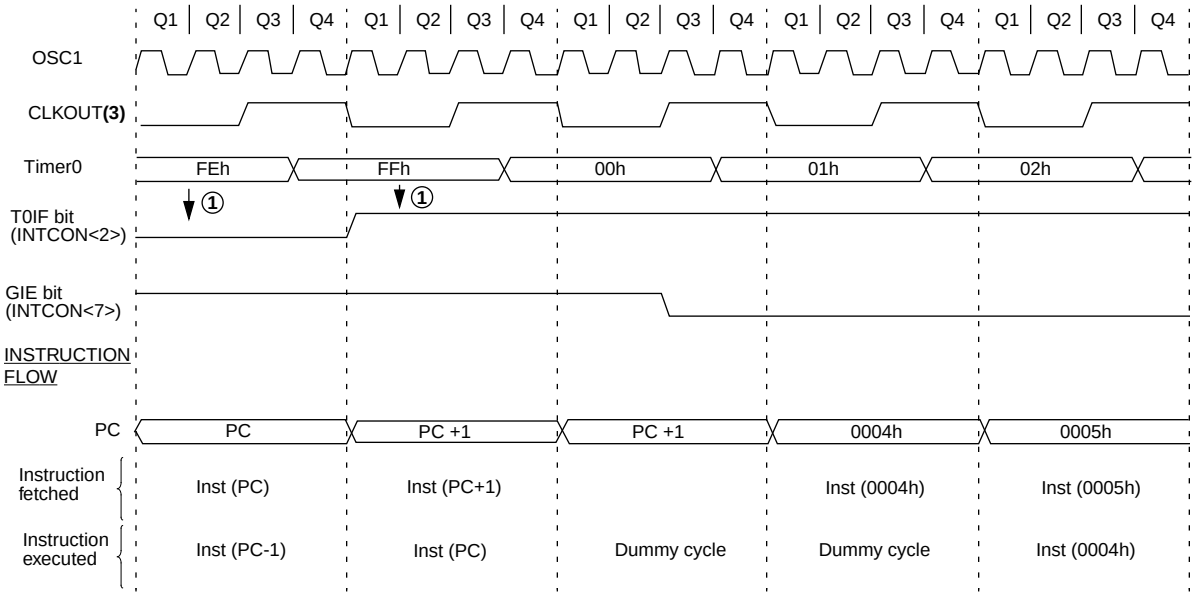

Note 1: Interrupt flag bit T0IF is sampled here (every Q1).
2: Interrupt latency = 4TCY where TCY = instruction cycle time.
3: CLKOUT is available only in RC oscillator mode.

© 1997 Microchip Technology Inc.

7.2 Using Timer0 with an External Clock

When an external clock input is used for Timer0, it must meet certain requirements. The requirements ensure the external clock can be synchronized with the internal phase clock (TOSC). Also, there is a delay in the actual incrementing of Timer0 after synchronization.

7.2.1 EXTERNAL CLOCK SYNCHRONIZATION

When no prescaler is used, the external clock input is the same as the prescaler output. The synchronization of T0CKI with the internal phase clocks is accomplished by sampling the prescaler output on the Q2 and Q4 cycles of the internal phase clocks (Figure 7-5). Therefore, it is necessary for T0CKI to be high for at least 2Tosc (and a small RC delay of 20 ns) and low for at least 2Tosc (and a small RC delay of 20 ns). Refer to the electrical specification of the desired device.

When a prescaler is used, the external clock input is divided by the asynchronous ripple-counter type prescaler so that the prescaler output is symmetrical. For the external clock to meet the sampling requirement, the ripple-counter must be taken into account. Therefore, it is necessary for T0CKI to have a period of at least 4Tosc (and a small RC delay of 40 ns) divided by the prescaler value. The only requirement on T0CKI high and low time is that they do not violate the minimum pulse width requirement of 10 ns. Refer to parameters 40, 41 and 42 in the electrical specification of the desired device.

7.2.2 TMR0 INCREMENT DELAY

Since the prescaler output is synchronized with the internal clocks, there is a small delay from the time the external clock edge occurs to the time the Timer0 module is actually incremented. Figure 7-5 shows the delay from the external clock edge to the timer incrementing.

FIGURE 7-5: TIMER0 TIMING WITH EXTERNAL CLOCK

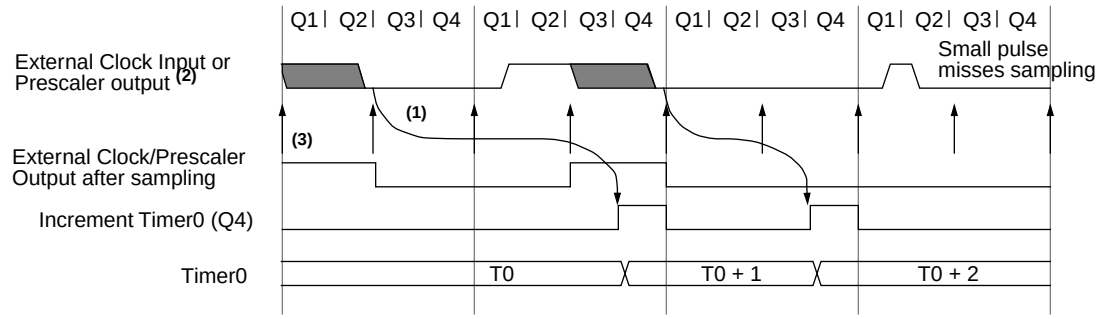

Note 1: Delay from clock input change to Timer0 increment is 3Tosc to 7Tosc. (Duration of Q = Tosc). Therefore, the error in measuring the interval between two edges on Timer0 input = ±4Tosc max.
2: External clock if no prescaler selected, Prescaler output otherwise.
3: The arrows indicate the points in time where sampling occurs.

7.3 Prescaler

An 8-bit counter is available as a prescaler for the Timer0 module, or as a postscaler for the Watchdog Timer (Figure 7-6). For simplicity, this counter is being referred to as “prescaler” throughout this data sheet. Note that the prescaler may be used by either the Timer0 module or the WDT but not both. Thus, a prescaler assignment for the Timer0 module means that there is no prescaler for the Watchdog Timer, and vice-versa.

The PSA and PS2:PS0 bits (OPTION<3:0>) determine the prescaler assignment and prescale ratio.

When assigned to the Timer0 module, all instructions writing to the TMR0 register (e.g. `CLRF 1, MOVWF 1, BSF 1,x`....etc.) will clear the prescaler count. When assigned to WDT, a `CLRWDT` instruction will clear the prescaler count along with the Watchdog Timer. The prescaler is not readable or writable.

Note:	Writing to TMR0 when the prescaler is assigned to Timer0 will clear the prescaler count, but will not change the prescaler assignment.

FIGURE 7-6: BLOCK DIAGRAM OF THE TIMER0/WDT PRESCALER

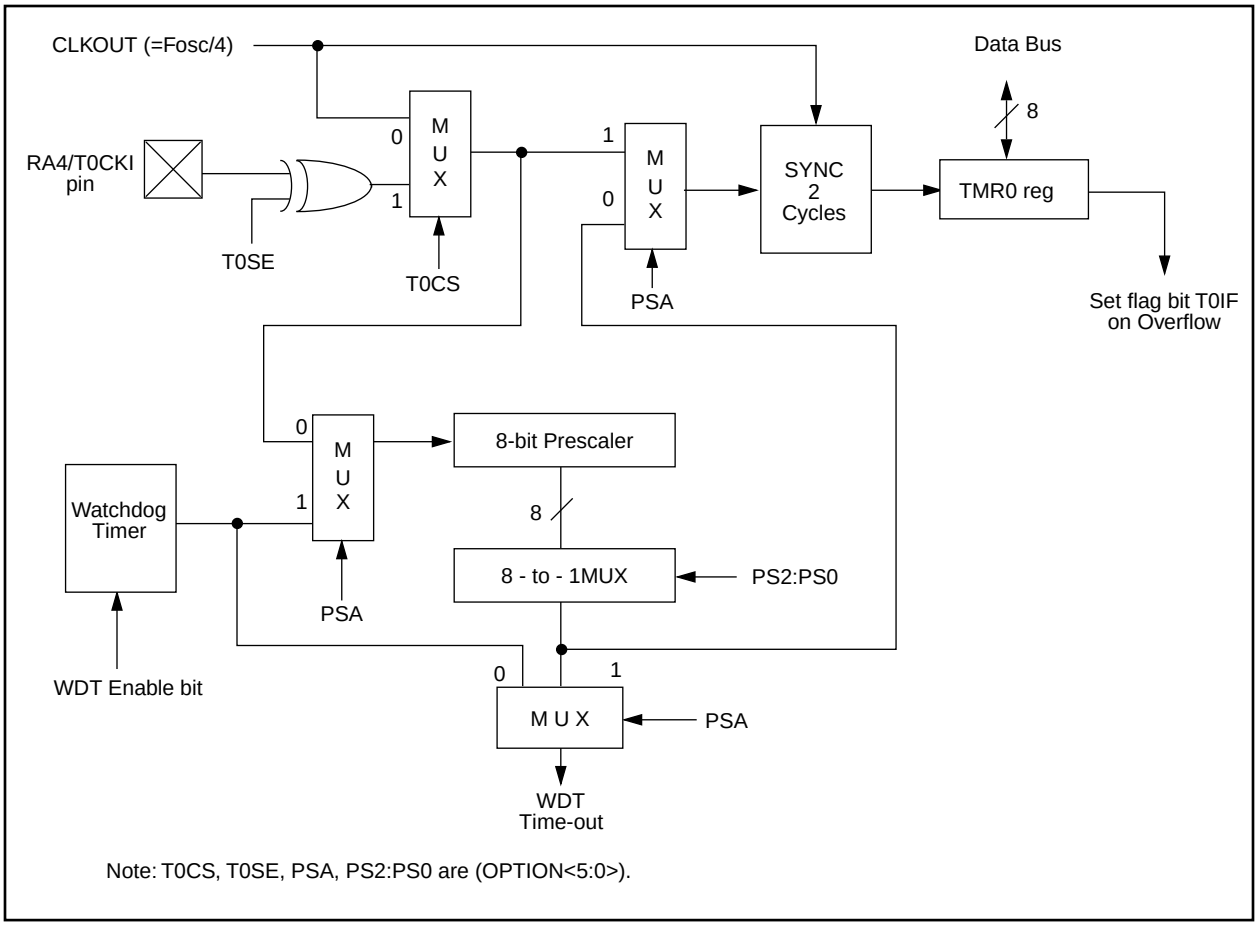

© 1997 Microchip Technology Inc.

7.3.1 SWITCHING PRESCALER ASSIGNMENT

The prescaler assignment is fully under software control, i.e., it can be changed “on the fly” during program execution.

Note: To avoid an unintended device RESET, the following instruction sequence (shown in Example 7-1) must be executed when changing the prescaler assignment from Timer0 to the WDT. This precaution must be followed even if the WDT is disabled.

EXAMPLE 7-1: CHANGING PRESCALER (TIMER0→WDT)

Lines 2 and 3 do NOT have to be included if the final desired prescale value is other than 1:1. If 1:1 is final desired value, then a temporary prescale value is set in lines 2 and 3 and the final prescale value will be set in lines 10 and 11.

```
1)  BSF    STATUS, RP0   ;Select Bank1
2)  MOVLW  b'xx0x0xxx'   ;Select clock source and prescale value of
3)  MOVWF  OPTION_REG    ;other than 1:1
4)  BCF    STATUS, RP0   ;Select Bank0
5)  CLRF   TMR0          ;Clear TMR0 and prescaler
6)  BSF    STATUS, RP1   ;Select Bank1
7)  MOVLW  b'xxxx1xxx'   ;Select WDT, do not change prescale value
8)  MOVWF  OPTION_REG    ;
9)  CLRWDT               ;Clears WDT and prescaler
10) MOVLW  b'xxxx1xxx'   ;Select new prescale value and WDT
11) MOVWF  OPTION_REG    ;
12) BCF    STATUS, RP0   ;Select Bank0
```

To change prescaler from the WDT to the Timer0 module use the precaution shown in Example 7-2.

EXAMPLE 7-2: CHANGING PRESCALER (WDT→TIMER0)

```
CLRWDT                ;Clear WDT and prescaler
BSF      STATUS, RP0 ;Select Bank1
MOVLW    b'xxxx0xxx' ;Select TMR0, new prescale value and
MOVWF    OPTION_REG  ;clock source
BCF      STATUS, RP0 ;Select Bank0
```

TABLE 7-1: REGISTERS ASSOCIATED WITH TIMER0

Address	Name	Bit 7	Bit 6	Bit 5	Bit 4	Bit 3	Bit 2	Bit 1	Bit 0	Value on Power-on Reset	Value on all other resets
01h, 101h	TMR0	Timer0 module’s register								xxxx xxxx	uuuu uuuu
0Bh, 8Bh, 10Bh, 18Bh	INTCON	GIE	PEIE	T0IE	INTE	RBIE	T0IF	INTF	RBIF	0000 000x	0000 000u
81h, 181h	OPTION	$\overline{\text{RBPU}}$	INTEDG	T0CS	T0SE	PSA	PS2	PS1	PS0	1111 1111	1111 1111
85h	TRISA	—	—	PORTA Data Direction Control Register						--11 1111	--11 1111

Legend: x = unknown, u = unchanged, - = unimplemented locations read as '0'. Shaded cells are not used by Timer0.

NOTES:

© 1997 Microchip Technology Inc.

8.0 TIMER1 MODULE

Timer1 is a 16-bit timer/counter consisting of two 8-bit registers (TMR1H and TMR1L) which are readable and writable. The TMR1 Register pair (TMR1H:TMR1L) increments from 0000h to FFFFh and rolls over to 0000h. The TMR1 Interrupt, if enabled, is generated on overflow which is latched in interrupt flag bit TMR1IF (PIR1<0>). This interrupt can be enabled/disabled by setting/clearing TMR1 interrupt enable bit TMR1IE (PIE1<0>).

Timer1 can operate in one of two modes:

- As a timer
- As a counter

The operating mode is determined by the clock select bit, TMR1CS (T1CON<1>).

In timer mode, Timer1 increments every instruction cycle. In counter mode, it increments on every rising edge of the external clock input.

Timer1 can be turned on and off using the control bit TMR1ON (T1CON<0>).

Timer1 also has an internal “reset input”. This reset can be generated by the CCP module (Section 10.0). Figure 8-1 shows the Timer1 control register.

When the Timer1 oscillator is enabled (T1OSCEN is set), the RC1/T1OSI and RC0/T1OSO/T1CKI pins become inputs.

FIGURE 8-1: T1CON: TIMER1 CONTROL REGISTER (ADDRESS 10h)

U-0	U-0	R/W-0	R/W-0	R/W-0	R/W-0	R/W-0	R/W-0
—	—	T1CKPS1	T1CKPS0	T1OSCEN	$\overline{\text{T1SYNC}}$	TMR1CS	TMR1ON
bit7							bit0

R = Readable bit
W = Writable bit
U = Unimplemented bit, read as ‘0’
- n = Value at POR reset

bit 7-6: **Unimplemented:** Read as '0'

bit 5-4: **T1CKPS1:T1CKPS0**: Timer1 Input Clock Prescale Select bits
11 = 1:8 Prescale value
10 = 1:4 Prescale value
01 = 1:2 Prescale value
00 = 1:1 Prescale value

bit 3: **T1OSCEN**: Timer1 Oscillator Enable Control bit
1 = Oscillator is enabled
0 = Oscillator is shut off
Note: The oscillator inverter and feedback resistor are turned off to eliminate power drain

bit 2: **$\overline{\text{T1SYNC}}$**: Timer1 External Clock Input Synchronization Control bit

TMR1CS = 1
1 = Do not synchronize external clock input
0 = Synchronize external clock input

TMR1CS = 0
This bit is ignored. Timer1 uses the internal clock when TMR1CS = 0.

bit 1: **TMR1CS**: Timer1 Clock Source Select bit
1 = External clock from pin T1CKI (on the rising edge)
0 = Internal clock (Fosc/4)

bit 0: **TMR1ON**: Timer1 On bit
1 = Enables Timer1
0 = Stops Timer1

8.1 Timer1 Operation in Timer Mode

Timer mode is selected by clearing the TMR1CS (T1CON<1>) bit. In this mode, the input clock to the timer is Fosc/4. The synchronize control bit $\overline{\text{T1SYNC}}$ (T1CON<2>) has no effect since the internal clock is always in sync.

8.2 Timer1 Operation in Synchronized Counter Mode

Counter mode is selected by setting bit TMR1CS. In this mode the timer increments on every rising edge of clock input on pin RC1/T1OSI when bit T1OSCEN is set or pin RC0/T1OSO/T1CKI when bit T1OSCEN is cleared.

If $\overline{\text{T1SYNC}}$ is cleared, then the external clock input is synchronized with internal phase clocks. The synchronization is done after the prescaler stage. The prescaler is an asynchronous ripple-counter.

In this configuration, during SLEEP mode, Timer1 will not increment even if the external clock is present, since the synchronization circuit is shut off. The prescaler however will continue to increment.

8.2.1 EXTERNAL CLOCK INPUT TIMING FOR SYNCHRONIZED COUNTER MODE

When an external clock input is used for Timer1 in synchronized counter mode, it must meet certain requirements. The external clock requirement is due to internal phase clock (Tosc) synchronization. Also, there is a delay in the actual incrementing of TMR1 after synchronization.

When the prescaler is 1:1, the external clock input is the same as the prescaler output. The synchronization of T1CKI with the internal phase clocks is accomplished by sampling the prescaler output on the Q2 and Q4 cycles of the internal phase clocks. Therefore, it is necessary for T1CKI to be high for at least 2Tosc (and a small RC delay of 20 ns) and low for at least 2Tosc (and a small RC delay of 20 ns). Refer to the appropriate electrical specifications, parameters 45, 46, and 47.

When a prescaler other than 1:1 is used, the external clock input is divided by the asynchronous ripple-counter type prescaler so that the prescaler output is symmetrical. In order for the external clock to meet the sampling requirement, the ripple-counter must be taken into account. Therefore, it is necessary for T1CKI to have a period of at least 4Tosc (and a small RC delay of 40 ns) divided by the prescaler value. The only requirement on T1CKI high and low time is that they do not violate the minimum pulse width requirements of 10 ns). Refer to the appropriate electrical specifications, parameters 40, 42, 45, 46, and 47.

FIGURE 8-2: TIMER1 BLOCK DIAGRAM

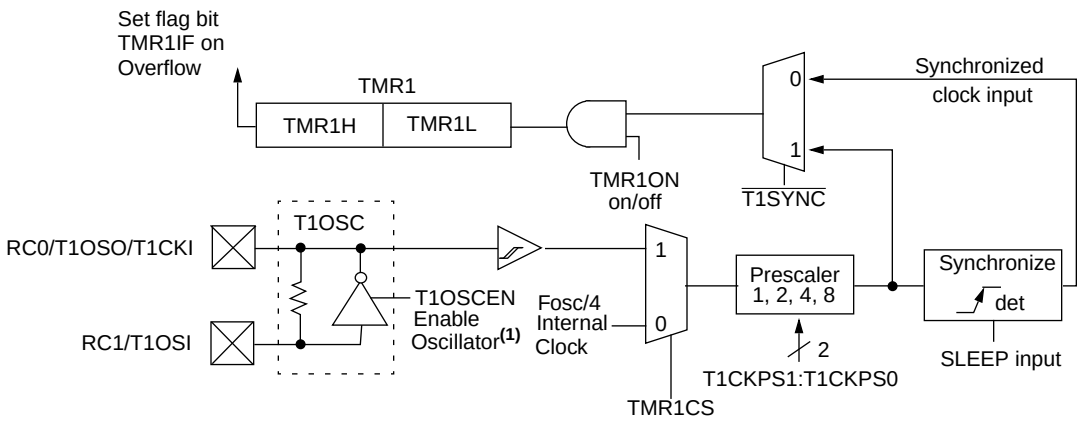

Note 1: When the T1OSCEN bit is cleared, the inverter and feedback resistor are turned off. This eliminates power drain.

© 1997 Microchip Technology Inc.

8.3 Timer1 Operation in Asynchronous Counter Mode

If control bit $\overline{\text{T1SYNC}}$ (T1CON<2>) is set, the external clock input is not synchronized. The timer continues to increment asynchronous to the internal phase clocks. The timer will continue to run during SLEEP and can generate an interrupt on overflow which will wake-up the processor. However, special precautions in software are needed to read-from or write-to the Timer1 register pair (TMR1H:TMR1L) (Section 8.3.2).

In asynchronous counter mode, Timer1 cannot be used as a time-base for capture or compare operations.

8.3.1 EXTERNAL CLOCK INPUT TIMING WITH UNSYNCHRONIZED CLOCK

If control bit $\overline{\text{T1SYNC}}$ is set, the timer will increment completely asynchronously. The input clock must meet certain minimum high time and low time requirements, as specified in timing parameters 45, 46, and 47.

8.3.2 READING AND WRITING TMR1 IN ASYNCHRONOUS COUNTER MODE

Reading TMR1H or TMR1L while the timer is running, from an external asynchronous clock, will ensure a valid read (taken care of in hardware). However, the user should keep in mind that reading the 16-bit timer in two 8-bit values itself poses certain problems since the timer may overflow between the reads.

For writes, it is recommended that the user simply stop the timer and write the desired values. A write contention may occur by writing to the timer registers while the register is incrementing. This may produce an unpredictable value in the timer register.

Reading the 16-bit value requires some care. Example 8-1 is an example routine to read the 16-bit timer value. This is useful if the timer cannot be stopped.

EXAMPLE 8-1: READING A 16-BIT FREE-RUNNING TIMER

```
; All interrupts are disabled
   MOVF   TMR1H, W  ;Read high byte
   MOVWF  TMPH      ;
   MOVF   TMR1L, W  ;Read low byte
   MOVWF  TMPL      ;
   MOVF   TMR1H, W  ;Read high byte
   SUBWF  TMPH,  W  ;Sub 1st read
                    ; with 2nd read
   BTFSC  STATUS,Z  ;Is result = 0
   GOTO   CONTINUE  ;Good 16-bit read
;
; TMR1L may have rolled over between the read
; of the high and low bytes. Reading the high
; and low bytes now will read a good value.
;
   MOVF   TMR1H, W  ;Read high byte
   MOVWF  TMPH      ;
   MOVF   TMR1L, W  ;Read low byte
   MOVWF  TMPL      ;
; Re-enable the Interrupt (if required)
CONTINUE            ;Continue with your code
```

8.4 Timer1 Oscillator

A crystal oscillator circuit is built in between pins T1OSI (input) and T1OSO (amplifier output). It is enabled by setting control bit T1OSCEN (T1CON<3>). The oscillator is a low power oscillator rated up to 200 kHz. It will continue to run during SLEEP. It is primarily intended for a 32 kHz crystal. Table 8-1 shows the capacitor selection for the Timer1 oscillator.

The Timer1 oscillator is identical to the LP oscillator. The user must provide a software time delay to ensure proper oscillator start-up.

TABLE 8-1: CAPACITOR SELECTION FOR THE TIMER1 OSCILLATOR

Osc Type	Freq	C1	C2
LP	32 kHz	33 pF	33 pF
	100 kHz	15 pF	15 pF
	200 kHz	15 pF	15 pF
These values are for design guidance only.			
Crystals Tested:			
32.768 kHz	Epson C-001R32.768K-A		± 20 PPM
100 kHz	Epson C-2 100.00 KC-P		± 20 PPM
200 kHz	STD XTL 200.000 kHz		± 20 PPM

Note 1: Higher capacitance increases the stability of oscillator but also increases the start-up time.
2: Since each resonator/crystal has its own characteristics, the user should consult the resonator/crystal manufacturer for appropriate values of external components.

8.5 Resetting Timer1 using the CCP Trigger Output

If the CCP1 module is configured in compare mode to generate a “special event trigger" (CCP1M3:CCP1M0 = 1011), this signal will reset Timer1.

Note:	The special event trigger from the CCP1 module will not set interrupt flag bit TMR1IF (PIR1<0>).

Timer1 must be configured for either timer or synchronized counter mode to take advantage of this feature. If Timer1 is running in asynchronous counter mode, this reset operation may not work.

In the event that a write to Timer1 coincides with a special event trigger from CCP1, the write will take precedence.

In this mode of operation, the CCPR1H:CCPR1L registers pair effectively becomes the period register for Timer1.

8.6 Resetting of Timer1 Register Pair (TMR1H:TMR1L)

TMR1H and TMR1L registers are not reset on a POR or any other reset except by the CCP1 special event trigger.

T1CON register is reset to 00h on a Power-on Reset. In any other reset, the register is unaffected.

8.7 Timer1 Prescaler

The prescaler counter is cleared on writes to the TMR1H or TMR1L registers.

TABLE 8-2: REGISTERS ASSOCIATED WITH TIMER1 AS A TIMER/COUNTER

Address	Name	Bit 7	Bit 6	Bit 5	Bit 4	Bit 3	Bit 2	Bit 1	Bit 0	Value on Power-on Reset	Value on all other resets
0Bh, 8Bh, 10Bh, 18Bh	INTCON	GIE	PEIE	T0IE	INTE	RBIE	T0IF	INTF	RBIF	0000 000x	0000 000u
0Ch	PIR1	LCDIF	ADIF(1)	—	—	SSPIF	CCP1IF	TMR2IF	TMR1IF	00-- 0000	00-- 0000
8Ch	PIE1	LCDIE	ADIE(1)	—	—	SSPIE	CCP1IE	TMR2IE	TMR1IE	00-- 0000	00-- 0000
0Eh	TMR1L	Holding register for the Least Significant Byte of the 16-bit TMR1 register								xxxx xxxx	uuuu uuuu
0Fh	TMR1H	Holding register for the Most Significant Byte of the 16-bit TMR1 register								xxxx xxxx	uuuu uuuu
10h	T1CON	—	—	T1CKPS1	T1CKPS0	T1OSCEN	$\overline{\text{T1SYNC}}$	TMR1CS	TMR1ON	--00 0000	--uu uuuu

Legend: x = unknown, u = unchanged, - = unimplemented read as '0'. Shaded cells are not used by theTimer1 module.
Note 1: Bits ADIE and ADIF are reserved on the PIC16C923, always maintain these bits clear.

© 1997 Microchip Technology Inc.

9.0 TIMER2 MODULE

Timer2 is an 8-bit timer with a prescaler and a postscaler. It can be used as the PWM time-base for the PWM mode of the CCP module. The TMR2 register is readable and writable, and is cleared on any device reset.

The input clock (Fosc/4) has a prescale option of 1:1, 1:4 or 1:16 (selected by control bits T2CKPS1:T2CKPS0 (T2CON<1:0>)).

The Timer2 module has an 8-bit period register, PR2. TMR2 increments from 00h until it matches PR2 and then resets to 00h on the next increment cycle. PR2 is a readable and writable register. The PR2 register is set during RESET.

The match output of TMR2 goes through a 4-bit postscaler (which gives a 1:1 to 1:16 scaling inclusive) to generate a TMR2 interrupt (latched in flag bit TMR2IF, (PIR1<1>)).

Timer2 can be shut off by clearing control bit TMR2ON (T2CON<2>) to minimize power consumption.

Figure 9-2 shows the Timer2 control register.

9.1 Timer2 Prescaler and Postscaler

The prescaler and postscaler counters are cleared when any of the following occurs:

- a write to the TMR2 register
- a write to the T2CON register
- any device reset (Power-on Reset, $\overline{\text{MCLR}}$ Reset, or Watchdog Timer Reset)

TMR2 will not clear when T2CON is written.

9.2 Output of TMR2

The output of TMR2 (before the postscaler) is fed to the Synchronous Serial Port module which optionally uses it to generate shift clock.

FIGURE 9-1: TIMER2 BLOCK DIAGRAM

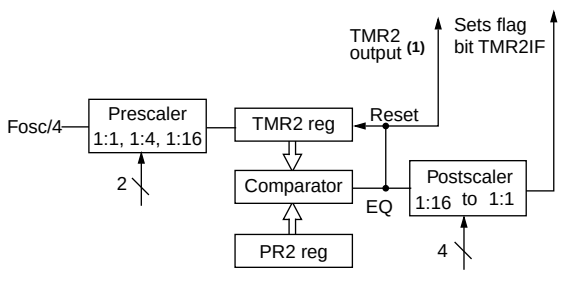

Note 1: TMR2 register output can be software selected by the SSP Module as the source clock.

FIGURE 9-2: T2CON: TIMER2 CONTROL REGISTER (ADDRESS 12h)

U-0	R/W-0	R/W-0	R/W-0	R/W-0	R/W-0	R/W-0	R/W-0
—	TOUTPS3	TOUTPS2	TOUTPS1	TOUTPS0	TMR2ON	T2CKPS1	T2CKPS0
bit7							bit0

R = Readable bit
W = Writable bit
U = Unimplemented bit, read as '0'
- n = Value at POR reset

bit 7: **Unimplemented:** Read as '0'

bit 6-3: **TOUTPS3:TOUTPS0**: Timer2 Output Postscale Select bits
0000 = 1:1 Postscale
0001 = 1:2 Postscale
•
•
•
1111 = 1:16 Postscale

bit 2: **TMR2ON**: Timer2 On bit
1 = Timer2 is on
0 = Timer2 is off

bit 1-0: **T2CKPS1:T2CKPS0**: Timer2 Clock Prescale Select bits
00 = Prescaler is 1
01 = Prescaler is 4
1x = Prescaler is 16

TABLE 9-1: REGISTERS ASSOCIATED WITH TIMER2 AS A TIMER/COUNTER

Address	Name	Bit 7	Bit 6	Bit 5	Bit 4	Bit 3	Bit 2	Bit 1	Bit 0	Value on Power-on Reset	Value on all other resets
0Bh, 8Bh, 10Bh, 18Bh	INTCON	GIE	PEIE	T0IE	INTE	RBIE	T0IF	INTF	RBIF	0000 000x	0000 000u
0Ch	PIR1	LCDIF	ADIF(1)	—	—	SSPIF	CCP1IF	TMR2IF	TMR1IF	00-- 0000	00-- 0000
8Ch	PIE1	LCDIE	ADIE(1)	—	—	SSPIE	CCP1IE	TMR2IE	TMR1IE	00-- 0000	00-- 0000
11h	TMR2	Timer2 module's register								0000 0000	0000 0000
12h	T2CON	—	TOUTPS3	TOUTPS2	TOUTPS1	TOUTPS0	TMR2ON	T2CKPS1	T2CKPS0	-000 0000	-000 0000
92h	PR2	Timer2 Period Register								1111 1111	1111 1111

Legend: x = unknown, u = unchanged, - = unimplemented read as '0'. Shaded cells are not used by the Timer2 module.
Note 1: Bits ADIE and ADIF are reserved on the PIC16C923, always maintain these bits clear.

© 1997 Microchip Technology Inc.

10.0 CAPTURE/COMPARE/PWM (CCP) MODULE

The CCP (Capture/Compare/PWM) module contains a 16-bit register which can operate as a 16-bit capture register, as a 16-bit compare register, or as a PWM master/slave duty cycle register. Table 10-1 shows the timer resources used by the CCP module.

Capture/Compare/PWM Register1 (CCPR1) is comprised of two 8-bit registers: CCPR1L (low byte) and CCPR1H (high byte). The CCP1CON register controls the operation of CCP1. All three are readable and writable.

Figure 10-1 shows the CCP1CON register.

For use of the CCP module, refer to the *Embedded Control Handbook,* "Using the CCP Modules" (AN594).

TABLE 10-1: CCP MODE - TIMER RESOURCE

CCP Mode	Timer Resource
Capture	Timer1
Compare	Timer1
PWM	Timer2

FIGURE 10-1: CCP1CON REGISTER (ADDRESS 17h)

U-0	U-0	R/W-0	R/W-0	R/W-0	R/W-0	R/W-0	R/W-0
—	—	CCP1X	CCP1Y	CCP1M3	CCP1M2	CCP1M1	CCP1M0
bit7							bit0

R = Readable bit
W = Writable bit
U = Unimplemented bit, read as ‘0’
- n =Value at POR reset

bit 7-6: **Unimplemented:** Read as '0'

bit 5-4: **CCP1X:CCP1Y**: PWM Least Significant bits
Capture Mode
Unused
Compare Mode
Unused
PWM Mode
These bits are the two LSbs of the PWM duty cycle. The eight MSbs are found in CCPR1L.

bit 3-0: **CCP1M3:CCP1M0**: CCP1 Mode Select bits
`0000` = Capture/Compare/PWM off (resets CCP1 module)
`0100` = Capture mode, every falling edge
`0101` = Capture mode, every rising edge
`0110` = Capture mode, every 4th rising edge
`0111` = Capture mode, every 16th rising edge
`1000` = Compare mode, set output on match (bit CCP1IF is set)
`1001` = Compare mode, clear output on match (bit CCP1IF is set)
`1010` = Compare mode, generate software interrupt on match (bit CCP1IF is set, CCP1 pin is unaffected)
`1011` = Compare mode, trigger special event (CCP1IF bit is set; CCP1 resets TMR1)
`11xx` = PWM mode

© 1997 Microchip Technology Inc.

10.1 Capture Mode

In Capture mode, CCPR1H:CCPR1L captures the 16-bit value of the TMR1 register when an event occurs on pin RC2/CCP1 (Figure 10-2). An event is defined as:

- Every falling edge
- Every rising edge
- Every 4th rising edge
- Every 16th rising edge

An event is selected by control bits CCP1M3:CCP1M0 (CCP1CON<3:0>). When a capture is made, the interrupt request flag bit CCP1IF (PIR1<2>) is set. It must be cleared in software. If another capture occurs before the value in register CCPR1 is read, the old captured value will be lost.

10.1.1 CCP PIN CONFIGURATION

In capture mode, the RC2/CCP1 pin should be configured as an input by setting the TRISC<2> bit.

Note:	If the RC2/CCP1 pin is configured as an output, a write to the port can cause a capture condition.

FIGURE 10-2: CAPTURE MODE OPERATION BLOCK DIAGRAM

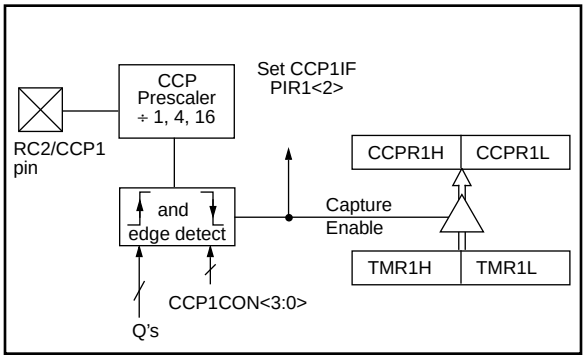

10.1.2 TIMER1 MODE SELECTION

Timer1 must be running in timer mode or synchronized counter mode for the CCP module to use the capture feature. In asynchronous counter mode the capture operation may not work.

10.1.3 SOFTWARE INTERRUPT

When the Capture mode is changed, a false capture interrupt may be generated. The user should keep enable bit CCP1IE (PIE1<2>) clear to avoid false interrupts and should clear flag bit CCP1IF following any such change in operating mode.

10.1.4 CCP PRESCALER

There are four prescaler settings, specified by bits CCP1M3:CCP1M0. Whenever the CCP module is turned off, or the CCP module is not in Capture mode, the prescaler counter is cleared. This means that any reset will clear the prescaler counter.

Switching from one capture prescaler to another may generate an interrupt. Also, the prescaler counter will not be cleared, therefore the first capture may be from a non-zero prescaler. Example 10-1 shows the recommended method for switching between capture prescalers. This example also clears the prescaler counter and will not generate the "false" interrupt.

EXAMPLE 10-1: CHANGING BETWEEN CAPTURE PRESCALERS

```
CLRF   CCP1CON     ; Turn CCP module off
MOVLW  NEW_CAPT_PS ; Load the W reg with
                   ; the new prescaler
                   ; mode value and CCP ON
MOVWF  CCP1CON     ; Load CCP1CON with
                   ; this value
```

10.2 Compare Mode

In Compare mode, the 16-bit CCPR1 register value is constantly compared against the TMR1 register pair value. When a match occurs, the RC2/CCP1 pin is:

- Driven High
- Driven Low
- Remains Unchanged

The action on the pin is based on the value of control bits CCP1M3:CCP1M0 (CCP1CON<3:0>). At the same time, a compare interrupt is also generated.

FIGURE 10-3: COMPARE MODE OPERATION BLOCK DIAGRAM

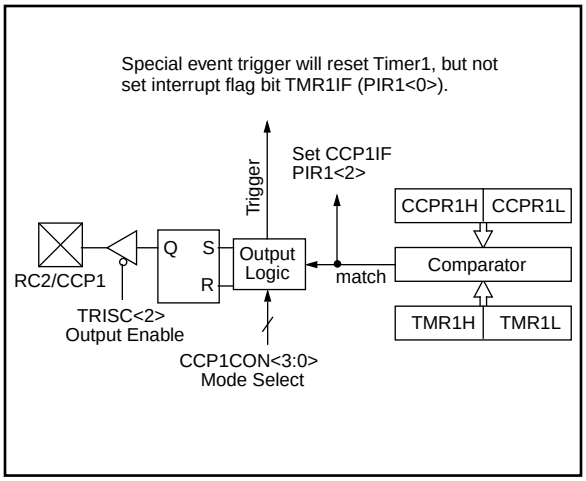

10.2.1 CCP PIN CONFIGURATION

The user must configure the RC2/CCP1 pin as an output by clearing the TRISC<2> bit.

Note:	Clearing the CCP1CON register will force the RC2/CCP1 compare output latch to the default low level. This is not the data latch.

© 1997 Microchip Technology Inc.

10.2.1 TIMER1 MODE SELECTION

Timer1 must be running in Timer mode or Synchronized Counter mode if the CCP module is using the compare feature. In Asynchronous Counter mode, the compare operation may not work.

10.2.2 SOFTWARE INTERRUPT MODE

When Generate Software Interrupt is chosen, the CCP1 pin is not affected. Only a CCP interrupt is generated (if enabled).

10.2.3 SPECIAL EVENT TRIGGER

In this mode, an internal hardware trigger is generated which may be used to initiate an action.

The special event trigger output of CCP1 resets the TMR1 register pair and starts an A/D conversion. This allows the CCPR1H:CCPR1L register pair to effectively be a 16-bit programmable period register for Timer1.

Note:	The "special event trigger" from the CCP1 module will not set interrupt flag bit TMR1IF (PIR1<0>).

10.3 PWM Mode

In Pulse Width Modulation (PWM) mode, the CCP1 pin produces up to a 10-bit resolution PWM output. Since the CCP1 pin is multiplexed with the PORTC data latch, the TRISC<2> bit must be cleared to make the CCP1 pin an output.

Note:	Clearing the CCP1CON register will force the CCP1 PWM output latch to the default low level. This is not the PORTC I/O data latch.

Figure 10-4 shows a simplified block diagram of the CCP module in PWM mode.

For a step by step procedure on how to set up the CCP module for PWM operation, see Section 10.3.3.

FIGURE 10-4: SIMPLIFIED PWM BLOCK DIAGRAM

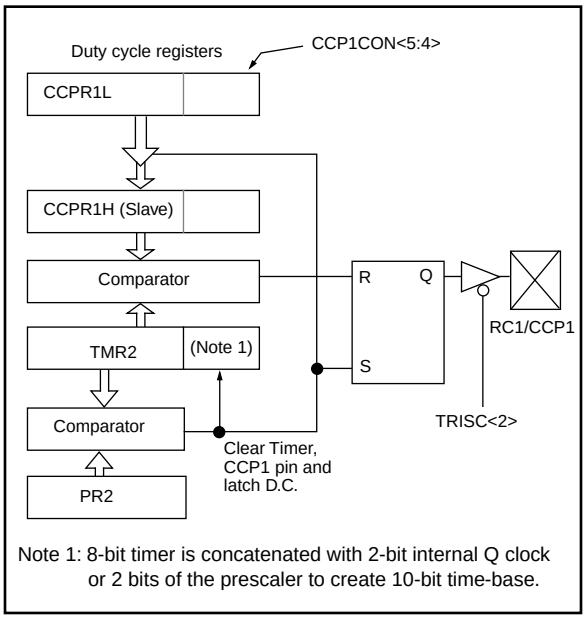

Note 1: 8-bit timer is concatenated with 2-bit internal Q clock or 2 bits of the prescaler to create 10-bit time-base.

A PWM output (Figure 10-5) has a time-base (period) and a time that the output stays high (duty cycle). The frequency of the PWM is the inverse of the period (1/period).

FIGURE 10-5: PWM OUTPUT

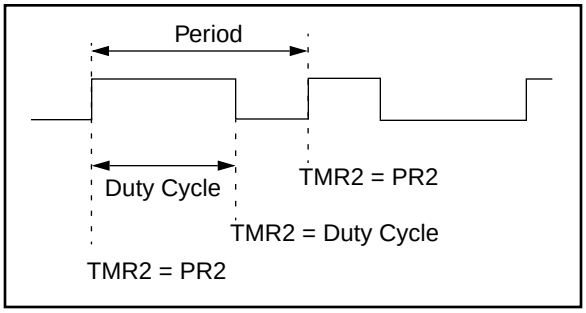

10.3.1 PWM PERIOD

The PWM period is specified by writing to the PR2 register. The PWM period can be calculated using the following formula:

$$\text{PWM period} = [\,(PR2) + 1\,] \cdot 4 \cdot T_{OSC} \cdot (\text{TMR2 prescale value})$$

PWM frequency is defined as 1 / [PWM period].

When TMR2 is equal to PR2, the following three events occur on the next increment cycle:

- TMR2 is cleared
- The CCP1 pin is set (exception: if PWM duty cycle = 0%, the CCP1 pin will not be set)
- The PWM duty cycle is latched from CCPR1L into CCPR1H

Note:	The Timer2 postscaler (Section 9.0) is not used in the determination of the PWM frequency. The postscaler could be used to have a servo update rate at a different frequency than the PWM output.

10.3.2 PWM DUTY CYCLE

The PWM duty cycle is specified by writing to the CCPR1L register and to the CCP1CON<5:4> bits. Up to 10-bit resolution is available: the CCPR1L contains the eight MSbs and CCP1CON<5:4> contains the two LSbs. This 10-bit value is represented by CCPR1L:CCP1CON<5:4>. The following equation is used to calculate the PWM duty cycle in time:

PWM duty cycle = (CCPR1L:CCP1CON<5:4>) • Tosc • (TMR2 prescale value)

CCPR1L and CCP1CON<5:4> can be written to at any time, but the duty cycle value is not latched into CCPR1H until after a match between PR2 and TMR2 occurs (i.e., the period is complete). In PWM mode, CCPR1H is a read-only register.

The CCPR1H register and a 2-bit internal latch are used to double buffer the PWM duty cycle. This double buffering is essential for glitchless PWM operation.

When the CCPR1H and 2-bit latch match TMR2 concatenated with an internal 2-bit Q clock or 2 bits of the TMR2 prescaler, the CCP1 pin is cleared.

Maximum PWM resolution (bits) for a given PWM frequency:

$$= \frac{\log\left(\frac{F_{OSC}}{F_{PWM}}\right)}{\log(2)} \quad \text{bits}$$

Note:	If the PWM duty cycle value is longer than the PWM period the CCP1 pin will not be cleared.

EXAMPLE 10-2: PWM PERIOD AND DUTY CYCLE CALCULATION

Desired PWM frequency is 31.25 kHz,
Fosc = 8 MHz
TMR2 prescale = 1

1/31.25 kHz = [(PR2) + 1] • 4 • 1/8 MHz • 1
32 µs = [(PR2) + 1] • 4 • 125 ns • 1
PR2 = 63

Find the maximum resolution of the duty cycle that can be used with a 31.25 kHz frequency and 8 MHz oscillator:

1/31.25 kHz = $2^{\text{PWM RESOLUTION}}$ • 1/8 MHz • 1
32 µs = $2^{\text{PWM RESOLUTION}}$ • 125 ns • 1
256 = $2^{\text{PWM RESOLUTION}}$
log(256) = (PWM Resolution) • log(2)
8.0 = PWM Resolution

At most, an 8-bit resolution duty cycle can be obtained from a 31.25 kHz frequency and a 8 MHz oscillator, i.e., 0 ≤ CCPR1L:CCP1CON<5:4> ≤ 255. Any value greater than 255 will result in a 100% duty cycle.

In order to achieve higher resolution, the PWM frequency must be decreased. In order to achieve higher PWM frequency, the resolution must be decreased.

Table 10-2 lists example PWM frequencies and resolutions for Fosc = 8 MHz. TMR2 prescaler and PR2 values are also shown.

10.3.3 SET-UP FOR PWM OPERATION

The following steps should be taken when configuring the CCP module for PWM operation:

1. Set the PWM period by writing to the PR2 register.
2. Set the PWM duty cycle by writing to the CCPR1L register and CCP1CON<5:4> bits.
3. Make the CCP1 pin an output by clearing the TRISC<2> bit.
4. Set the TMR2 prescale value and enable Timer2 by writing to T2CON.
5. Configure the CCP module for PWM operation.

TABLE 10-2: EXAMPLE PWM FREQUENCIES AND RESOLUTIONS AT 8 MHz

PWM Frequency	488 Hz	1.95 kHz	7.81 kHz	31.25 kHz	62.5 kHz	250 kHz
Timer Prescaler (1, 4, 16)	16	4	1	1	1	1
PR2 Value	0xFF	0xFF	0xFF	0x3F	0x1F	0x07
Maximum Resolution (bits)	10	10	10	8	7	5

© 1997 Microchip Technology Inc.

TABLE 10-3: REGISTERS ASSOCIATED WITH TIMER1, CAPTURE AND COMPARE

Address	Name	Bit 7	Bit 6	Bit 5	Bit 4	Bit 3	Bit 2	Bit 1	Bit 0	Value on Power-on Reset	Value on all other Resets
0Bh, 8Bh, 10Bh, 18Bh	INTCON	GIE	PEIE	T0IE	INTE	RBIE	T0IF	INTF	RBIF	0000 000x	0000 000u
0Ch	PIR1	LCDIF	ADIF(1)	—	—	SSPIF	CCP1IF	TMR2IF	TMR1IF	00-- 0000	00-- 0000
8Ch	PIE1	LCDIE	ADIE(1)	—	—	SSPIE	CCP1IE	TMR2IE	TMR1IE	00-- 0000	00-- 0000
87h	TRISC	—	—	PORTC Data Direction Control Register						--11 1111	--11 1111
0Eh	TMR1L	Holding register for the Least Significant Byte of the 16-bit TMR1 register								xxxx xxxx	uuuu uuuu
0Fh	TMR1H	Holding register for the Most Significant Byte of the 16-bit TMR1 register								xxxx xxxx	uuuu uuuu
10h	T1CON	—	—	T1CKPS1	T1CKPS0	T1OSCEN	$\overline{\text{T1SYNC}}$	TMR1CS	TMR1ON	--00 0000	--uu uuuu
15h	CCPR1L	Capture/Compare/PWM1 (LSB)								xxxx xxxx	uuuu uuuu
16h	CCPR1H	Capture/Compare/PWM1 (MSB)								xxxx xxxx	uuuu uuuu
17h	CCP1CON	—	—	CCP1X	CCP1Y	CCP1M3	CCP1M2	CCP1M1	CCP1M0	--00 0000	--00 0000

Legend: x = unknown, u = unchanged, - = unimplemented locations read as '0'. Shaded cells are not used in these modes.
Note 1: Bits ADIE and ADIF reserved on the PIC16C923, always maintain these bits clear.

TABLE 10-4: REGISTERS ASSOCIATED WITH PWM AND TIMER2

Address	Name	Bit 7	Bit 6	Bit 5	Bit 4	Bit 3	Bit 2	Bit 1	Bit 0	Value on Power-on Reset	Value on all other Resets
0Bh, 8Bh, 10Bh, 18Bh	INTCON	GIE	PEIE	T0IE	INTE	RBIE	T0IF	INTF	RBIF	0000 000x	0000 000u
0Ch	PIR1	LCDIF	ADIF(1)	—	—	SSPIF	CCP1IF	TMR2IF	TMR1IF	00-- 0000	00-- 0000
8Ch	PIE1	LCDIE	ADIE(1)	—	—	SSPIE	CCP1IE	TMR2IE	TMR1IE	00-- 0000	00-- 0000
87h	TRISC	—	—	PORTC Data Direction Control Register						--11 1111	--11 1111
11h	TMR2	Timer2 module's register								0000 0000	0000 0000
92h	PR2	Timer2 module's Period register								1111 1111	1111 1111
12h	T2CON	—	TOUTPS3	TOUTPS2	TOUTPS1	TOUTPS0	TMR2ON	T2CKPS1	T2CKPS0	-000 0000	-000 0000
15h	CCPR1L	Capture/Compare/PWM1 (LSB)								xxxx xxxx	uuuu uuuu
16h	CCPR1H	Capture/Compare/PWM1 (MSB)								xxxx xxxx	uuuu uuuu
17h	CCP1CON	—	—	CCP1X	CCP1Y	CCP1M3	CCP1M2	CCP1M1	CCP1M0	--00 0000	--00 0000

Legend: x = unknown, u = unchanged, - = unimplemented locations read as '0'. Shaded cells are not used in this mode.
Note 1: Bits ADIE and ADIF reserved on the PIC16C923, always maintain these bits clear.

NOTES:

© 1997 Microchip Technology Inc.

11.0 SYNCHRONOUS SERIAL PORT (SSP) MODULE

The Synchronous Serial Port (SSP) module is a serial interface useful for communicating with other peripheral or microcontroller devices. These peripheral devices may be serial EEPROMs, shift registers, display drivers, A/D converters, etc. The SSP module can operate in one of two modes:

- Serial Peripheral Interface (SPI)
- Inter-Integrated Circuit (I^2C)

Refer to Application Note AN578, *"Use of the SSP Module in the I^2C Multi-Master Environment."*

FIGURE 11-1: SSPSTAT: SYNC SERIAL PORT STATUS REGISTER (ADDRESS 94h)

R/W-0	R/W-0	R-0	R-0	R-0	R-0	R-0	R-0
SMP	CKE	D/$\overline{A}$	P	S	R/$\overline{W}$	UA	BF
bit7							bit0

R = Readable bit
W = Writable bit
U = Unimplemented bit, read as '0'
- n =Value at POR reset

bit 7: **SMP:** SPI data input sample phase
<u>SPI Master Mode</u>
1 = Input data sampled at end of data output time
0 = Input data sampled at middle of data output time
<u>SPI Slave Mode</u>
SMP must be cleared when SPI is used in slave mode

bit 6: **CKE**: SPI Clock Edge Select (Figure 11-5, Figure 11-6, and Figure 11-7)
<u>CKP = 0</u>
1 = Data transmitted on rising edge of SCK
0 = Data transmitted on falling edge of SCK
<u>CKP = 1</u>
1 = Data transmitted on falling edge of SCK
0 = Data transmitted on rising edge of SCK

bit 5: **D/$\overline{A}$**: Data/$\overline{\text{Address}}$ bit (I^2C mode only)
1 = Indicates that the last byte received or transmitted was data
0 = Indicates that the last byte received or transmitted was address

bit 4: **P**: Stop bit (I^2C mode only. This bit is cleared when the SSP module is disabled, or when the Start bit was detected last)
1 = Indicates that a stop bit has been detected last (this bit is '0' on RESET)
0 = Stop bit was not detected last

bit 3: **S**: Start bit (I^2C mode only. This bit is cleared when the SSP module is disabled, or when the Stop bit was detected last)
1 = Indicates that a start bit has been detected last (this bit is '0' on RESET)
0 = Start bit was not detected last

bit 2: **R/$\overline{W}$**: Read/Write bit information (I^2C mode only)
This bit holds the R/W bit information following the last address match. This bit is only valid from the address match to the next start bit, stop bit, or $\overline{\text{ACK}}$ bit.
1 = Read
0 = Write

bit 1: **UA**: Update Address (10-bit I^2C mode only)
1 = Indicates that the user needs to update the address in the SSPADD register
0 = Address does not need to be updated

bit 0: **BF**: Buffer Full Status bit

<u>Receive</u> (SPI and I^2C modes)
1 = Receive complete, SSPBUF is full
0 = Receive not complete, SSPBUF is empty

<u>Transmit</u> (I^2C mode only)
1 = Transmit in progress, SSPBUF is full
0 = Transmit complete, SSPBUF is empty

FIGURE 11-2: SSPCON: SYNC SERIAL PORT CONTROL REGISTER (ADDRESS 14h)

R/W-0	R/W-0	R/W-0	R/W-0	R/W-0	R/W-0	R/W-0	R/W-0
WCOL	SSPOV	SSPEN	CKP	SSPM3	SSPM2	SSPM1	SSPM0
bit7							bit0

R = Readable bit
W = Writable bit
U = Unimplemented bit, read as '0'
- n =Value at POR reset

bit 7: **WCOL**: Write Collision Detect bit
1 = The SSPBUF register is written while it is still transmitting the previous word (must be cleared in software)
0 = No collision

bit 6: **SSPOV**: Receive Overflow Indicator bit

In SPI mode
1 = A new byte is received while the SSPBUF register is still holding the previous data. In case of overflow, the data in SSPSR is lost. Overflow can only occur in slave mode. The user must read the SSPBUF, even if only transmitting data, to avoid setting overflow. In master mode the overflow bit is not set since each new reception (and transmission) is initiated by writing to the SSPBUF register.
0 = No overflow

In I^2C mode
1 = A byte is received while the SSPBUF register is still holding the previous byte. SSPOV is a "don't care" in transmit mode. SSPOV must be cleared in software in either mode.
0 = No overflow

bit 5: **SSPEN**: Synchronous Serial Port Enable bit

In SPI mode
1 = Enables serial port and configures SCK, SDO, and SDI as serial port pins
0 = Disables serial port and configures these pins as I/O port pins

In I^2C mode
1 = Enables the serial port and configures the SDA and SCL pins as serial port pins
0 = Disables serial port and configures these pins as I/O port pins
In both modes, when enabled, these pins must be properly configured as input or output.

bit 4: **CKP**: Clock Polarity Select bit
In SPI mode
1 = Idle state for clock is a high level
0 = Idle state for clock is a low level
In I^2C mode
SCK release control
1 = Enable clock
0 = Holds clock low (clock stretch) (Used to ensure data setup time)

bit 3-0: **SSPM3:SSPM0**: Synchronous Serial Port Mode Select bits
`0000` = SPI master mode, clock = FOSC/4
`0001` = SPI master mode, clock = FOSC/16
`0010` = SPI master mode, clock = FOSC/64
`0011` = SPI master mode, clock = TMR2 output/2
`0100` = SPI slave mode, clock = SCK pin. $\overline{SS}$ pin control enabled.
`0101` = SPI slave mode, clock = SCK pin. $\overline{SS}$ pin control disabled. $\overline{SS}$ can be used as I/O pin
`0110` = I^2C slave mode, 7-bit address
`0111` = I^2C slave mode, 10-bit address
`1011` = I^2C Firmware controlled master mode (slave idle)
`1110` = I^2C slave mode, 7-bit address with start and stop bit interrupts enabled
`1111` = I^2C slave mode, 10-bit address with start and stop bit interrupts enabled

© 1997 Microchip Technology Inc.

11.1 SPI Mode

The SPI mode allows 8-bits of data to be synchronously transmitted and received simultaneously. To accomplish communication, typically three pins are used:

- Serial Data Out (SDO) RC5/SDO
- Serial Data In (SDI) RC4/SDI
- Serial Clock (SCK) RC3/SCK

Additionally a fourth pin may be used when in a slave mode of operation:

- Slave Select ($\overline{SS}$) RA5/AN4/$\overline{SS}$ (the AN4 function is implemented on the PIC16C924 only)

When initializing the SPI, several options need to be specified. This is done by programming the appropriate control bits in the SSPCON register (SSPCON<5:0>) and SSPSTAT<7:6>. These control bits allow the following to be specified:

- Master Mode (SCK is the clock output)
- Slave Mode (SCK is the clock input)
- Clock Polarity (Idle state of SCK)
- Clock edge (output data on rising/falling edge of SCK)
- Clock Rate (Master mode only)
- Slave Select Mode (Slave mode only)

The SSP consists of a transmit/receive Shift Register (SSPSR) and a buffer register (SSPBUF). The SSPSR shifts the data in and out of the device, MSb first. The SSPBUF holds the data that was written to the SSPSR, until the received data is ready. Once the 8-bits of data have been received, that byte is moved to the SSPBUF register. Then the buffer full detect bit BF (SSPSTAT<0>) and interrupt flag bit SSPIF (PIR1<3>) are set. This double buffering of the received data (SSPBUF) allows the next byte to start reception before reading the data that was just received. Any write to the SSPBUF register during transmission/reception of data will be ignored, and the write collision detect bit WCOL (SSPCON<7>) will be set. User software must clear the WCOL bit so that it can be determined if the following write(s) to the SSPBUF register completed successfully. When the application software is expecting to receive valid data, the SSPBUF should be read before the next byte of data to transfer is written to the SSPBUF. Buffer full bit BF (SSPSTAT<0>) indicates when SSPBUF has been loaded with the received data (transmission is complete). When the SSPBUF is read, bit BF is cleared. This data may be irrelevant if the SPI is only a transmitter. Generally the SSP Interrupt is used to determine when the transmission/reception has completed. The SSPBUF must be read and/or written. If the interrupt method is not going to be used, then software polling can be done to ensure that a write collision does not occur. Example 11-1 shows the loading of the SSPBUF (SSPSR) for data transmission. The shaded instruction is only required if the received data is meaningful.

EXAMPLE 11-1: LOADING THE SSPBUF (SSPSR) REGISTER

```
     BCF   STATUS, RP1    ;Select Bank1
     BSF   STATUS, RP0    ;
LOOP BTFSS SSPSTAT, BF    ;Has data been
                          ;received
                          ;(transmit
                          ;complete)?
     GOTO  LOOP           ;No
     BCF   STATUS, RP0    ;Select Bank0
     MOVF  SSPBUF, W      ;W reg = contents
                          ; of SSPBUF
     MOVWF RXDATA         ;Save in user RAM
     MOVF  TXDATA, W      ;W reg = contents
                          ; of TXDATA
     MOVWF SSPBUF         ;New data to xmit
```

The block diagram of the SSP module, when in SPI mode (Figure 11-3), shows that the SSPSR is not directly readable or writable, and can only be accessed from addressing the SSPBUF register. Additionally, the SSP status register (SSPSTAT) indicates the various status conditions.

FIGURE 11-3: SSP BLOCK DIAGRAM (SPI MODE)

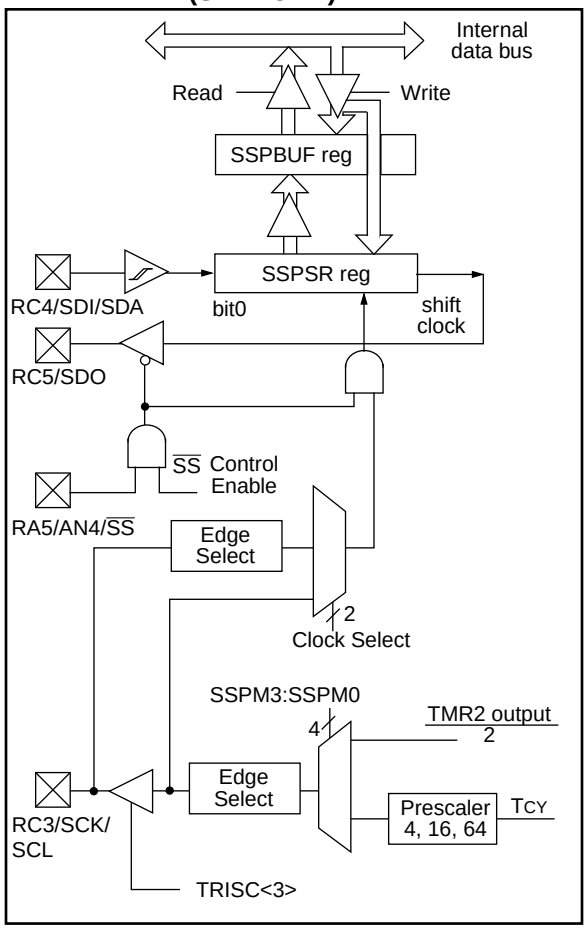

To enable the serial port, SSP Enable bit, SSPEN (SSPCON<5>) must be set. To reset or reconfigure SPI mode, clear bit SSPEN, re-initialize the SSPCON register, and then set bit SSPEN. This configures the SDI, SDO, SCK, and $\overline{SS}$ pins as serial port pins. For the pins to behave as the serial port function, they must have their data direction bits (in the TRISC register) appropriately programmed. That is:

- SDI must have TRISC<4> set
- SDO must have TRISC<5> cleared
- SCK (Master mode) must have TRISC<3> cleared
- SCK (Slave mode) must have TRISC<3> set
- $\overline{SS}$ must have TRISA<5> set

Any serial port function that is not desired may be overridden by programming the corresponding data direction (TRIS) register to the opposite value. An example would be in master mode where you are only sending data (to a display driver), then both SDI and $\overline{SS}$ could be used as general purpose outputs by clearing their corresponding TRIS register bits.

Figure 11-4 shows a typical connection between two microcontrollers. The master controller (Processor 1) initiates the data transfer by sending the SCK signal. Data is shifted out of both shift registers on their programmed clock edge, and latched on the opposite edge of the clock. Both processors should be programmed to same Clock Polarity (CKP), then both controllers would send and receive data at the same time. Whether the data is meaningful (or dummy data) depends on the application software. This leads to three scenarios for data transmission:

- Master sends data — Slave sends dummy data
- Master sends data — Slave sends data
- Master sends dummy data — Slave sends data

The master can initiate the data transfer at any time because it controls the SCK. The master determines when the slave (Processor 2) is to broadcast data by the firmware protocol.

In master mode the data is transmitted/received as soon as the SSPBUF register is written to. If the SPI is only going to receive, the SCK output could be disabled (programmed as an input). The SSPSR register will continue to shift in the signal present on the SDI pin at the programmed clock rate. As each byte is received, it will be loaded into the SSPBUF register as if a normal received byte (interrupts and status bits appropriately set). This could be useful in receiver applications as a “line activity monitor” mode.

In slave mode, the data is transmitted and received as the external clock pulses appear on SCK. When the last bit is latched the interrupt flag bit SSPIF (PIR1<3>) is set.

The clock polarity is selected by appropriately programming bit CKP (SSPCON<4>). This then would give waveforms for SPI communication as shown in Figure 11-5, Figure 11-6, and Figure 11-7 where the MSB is transmitted first. In master mode, the SPI clock rate (bit rate) is user programmable to be one of the following:

- FOSC/4 (or TCY)
- FOSC/16 (or 4 • TCY)
- FOSC/64 (or 16 • TCY)
- Timer2 output/2

This allows a maximum bit clock frequency (at 8 MHz) of 2 MHz. When in slave mode the external clock must meet the minimum high and low times.

In sleep mode, the slave can transmit and receive data and wake the device from sleep.

FIGURE 11-4: SPI MASTER/SLAVE CONNECTION

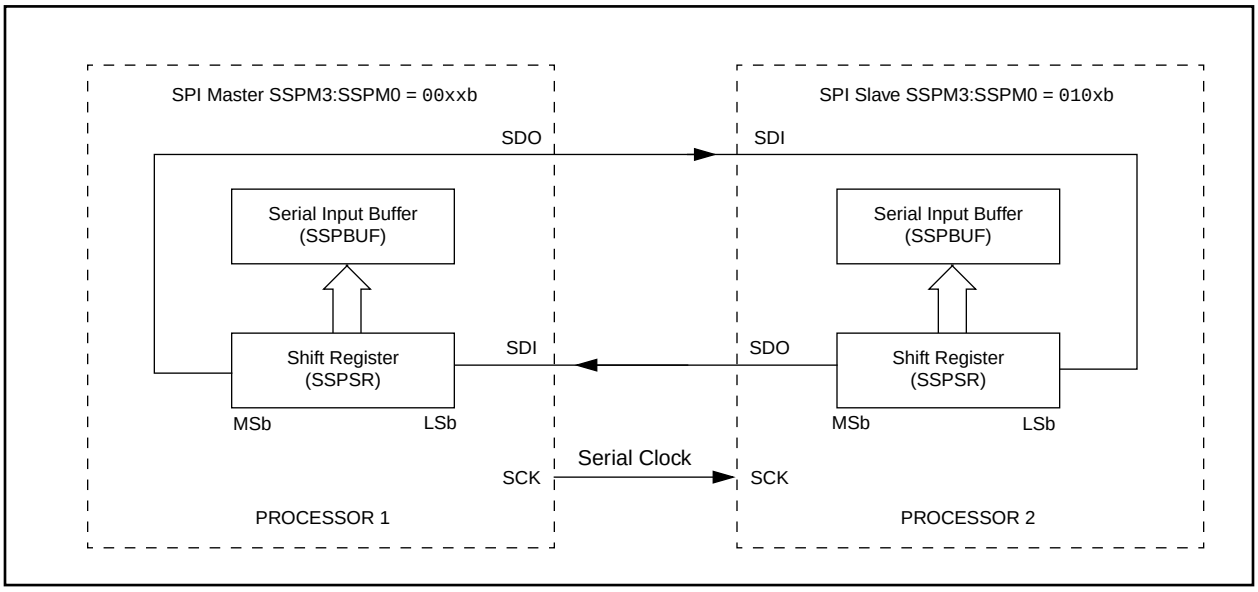

© 1997 Microchip Technology Inc.

The $\overline{SS}$ pin allows a synchronous slave mode. The SPI must be in slave mode (SSPCON<3:0> = 04h) and the TRISA<5> bit must be set for the synchronous slave mode to be enabled. When the $\overline{SS}$ pin is low, transmission and reception are enabled and the SDO pin is driven. When the $\overline{SS}$ pin goes high, the SDO pin is no longer driven, even if in the middle of a transmitted byte, and becomes a floating output. External pull-up/ pull-down resistors may be desirable, depending on the application.

> **Note:** When the SPI is in Slave Mode with $\overline{SS}$ pin control enabled, (SSPCON<3:0> = 0100) the SPI module will reset if the $\overline{SS}$ pin is set to VDD.
>
> **Note:** If the SPI is used in Slave Mode with CKE = '1', then the $\overline{SS}$ pin control must be enabled.

To emulate two-wire communication, the SDO pin can be connected to the SDI pin. When the SPI needs to operate as a receiver the SDO pin can be configured as an input. This disables transmissions from the SDO. The SDI can always be left as an input (SDI function) since it cannot create a bus conflict.

FIGURE 11-5: SPI MODE TIMING, MASTER MODE

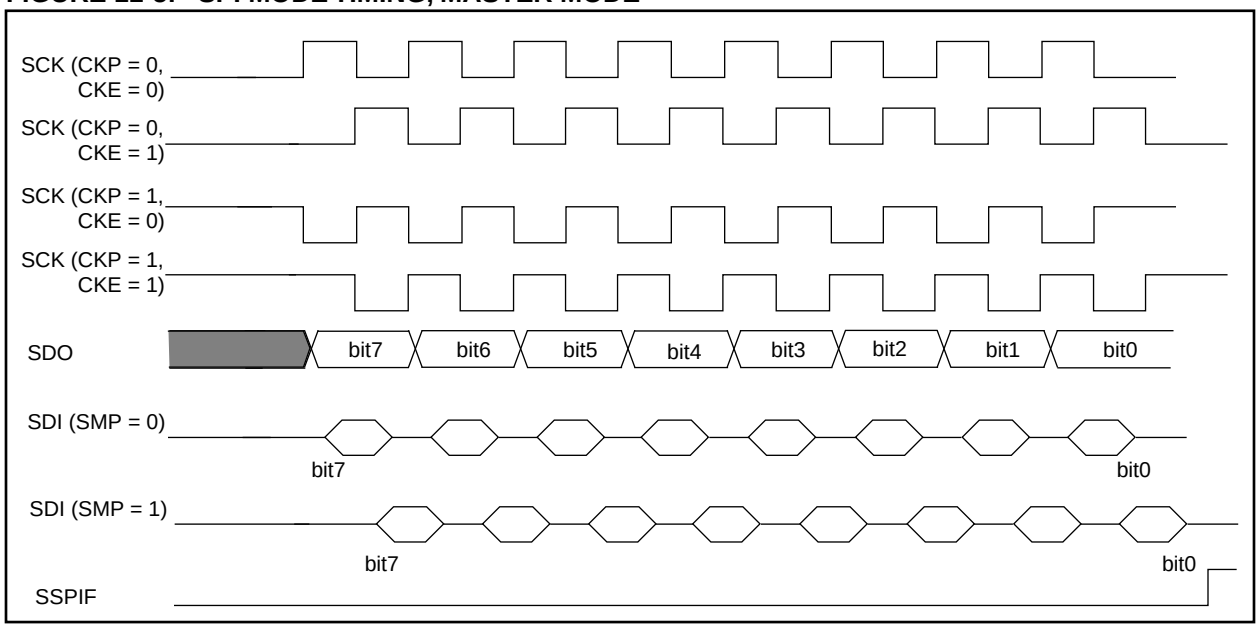

FIGURE 11-6: SPI MODE TIMING (SLAVE MODE WITH CKE = 0)

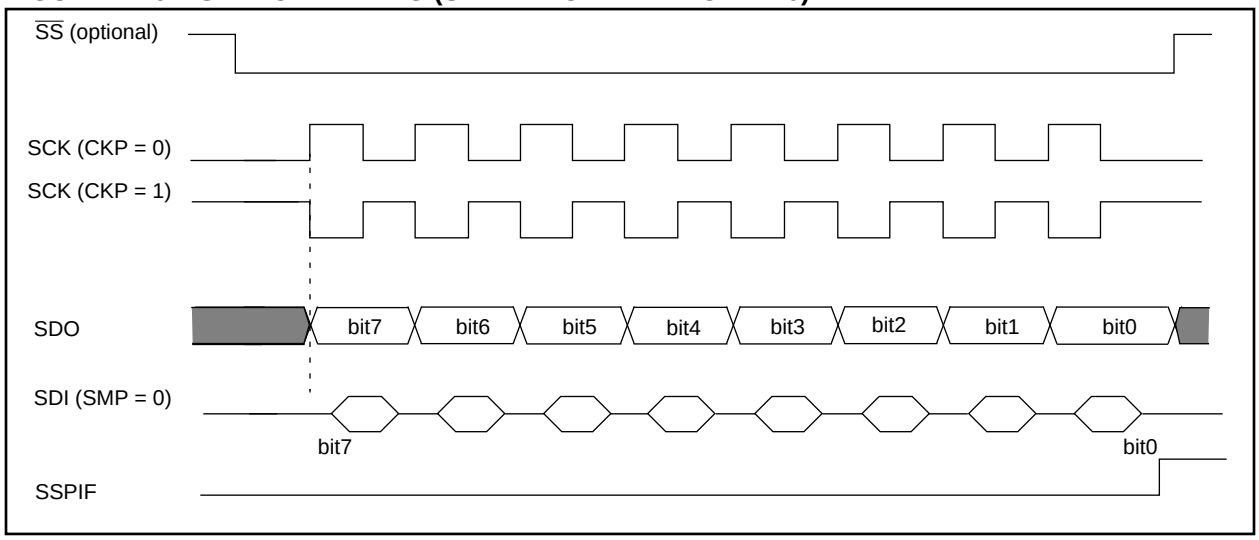

FIGURE 11-7: SPI MODE TIMING (SLAVE MODE WITH CKE = 1)

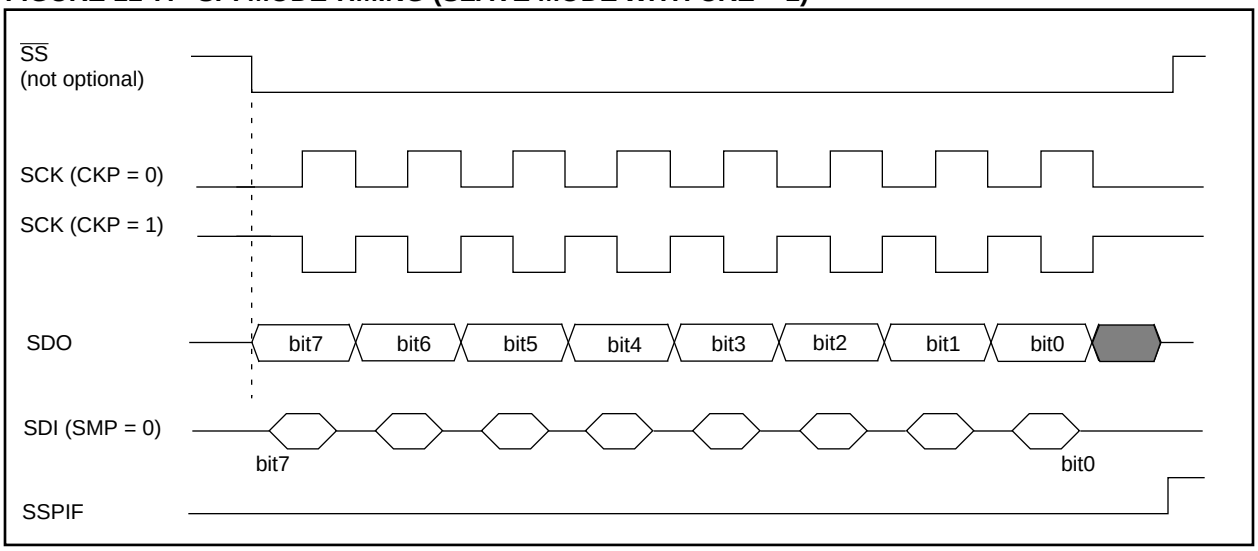

TABLE 11-1: REGISTERS ASSOCIATED WITH SPI OPERATION

Address	Name	Bit 7	Bit 6	Bit 5	Bit 4	Bit 3	Bit 2	Bit 1	Bit 0	Value on Power-on Reset	Value on all other resets
0Bh, 8Bh, 10Bh, 18Bh	INTCON	GIE	PEIE	T0IE	INTE	RBIE	T0IF	INTF	RBIF	0000 000x	0000 000u
0Ch	PIR1	LCDIF	ADIF(1)	—	—	SSPIF	CCP1IF	TMR2IF	TMR1IF	00-- 0000	00-- 0000
8Ch	PIE1	LCDIE	ADIE(1)	—	—	SSPIE	CCP1IE	TMR2IE	TMR1IE	00-- 0000	00-- 0000
13h	SSPBUF	Synchronous Serial Port Receive Buffer/Transmit Register								xxxx xxxx	uuuu uuuu
14h	SSPCON	WCOL	SSPOV	SSPEN	CKP	SSPM3	SSPM2	SSPM1	SSPM0	0000 0000	0000 0000
85h	TRISA	—	—	PORTA Data Direction Control Register						--11 1111	--11 1111
87h	TRISC	—	—	PORTC Data Direction Control Register						--11 1111	--11 1111
94h	SSPSTAT	SMP	CKE	D/$\overline{A}$	P	S	R/$\overline{W}$	UA	BF	0000 0000	0000 0000

Legend: x = unknown, u = unchanged, - = unimplemented read as '0'. Shaded cells are not used by the SSP in SPI mode.
Note 1: Bits ADIE and ADIF are reserved on the PIC16C923, always maintain these bits clear.

© 1997 Microchip Technology Inc.

11.2 I²C™ Overview

This section provides an overview of the Inter-Integrated Circuit (I^2C) bus, with Section 11.3 discussing the operation of the SSP module in I^2C mode.

The I^2C bus is a two-wire serial interface developed by the Philips Corporation. The original specification, or standard mode, was for data transfers of up to 100 Kbps. An enhanced specification, or fast mode is not supported. This device will communicate with fast mode devices if attached to the same bus.

The I^2C interface employs a comprehensive protocol to ensure reliable transmission and reception of data. When transmitting data, one device is the "master" which initiates transfer on the bus and generates the clock signals to permit that transfer, while the other device(s) acts as the "slave." All portions of the slave protocol are implemented in the SSP module's hardware, except general call support, while portions of the master protocol need to be addressed in the PIC16CXXX software. Table 11-2 defines some of the I^2C bus terminology. For additional information on the I^2C interface specification, refer to the Philips document "*The I^2C bus and how to use it.*" #939839340011, which can be obtained from the Philips Corporation.

In the I^2C interface protocol each device has an address. When a master wishes to initiate a data transfer, it first transmits the address of the device that it wishes to "talk" to. All devices "listen" to see if this is their address. Within this address, a bit specifies if the master wishes to read-from/write-to the slave device. The master and slave are always in opposite modes (transmitter/receiver) of operation during a data transfer. That is they can be thought of as operating in either of these two relations:

- Master-transmitter and Slave-receiver
- Slave-transmitter and Master-receiver

In both cases the master generates the clock signal.

The output stages of the clock (SCL) and data (SDA) lines must have an open-drain or open-collector in order to perform the wired-AND function of the bus. External pull-up resistors are used to ensure a high level when no device is pulling the line down. The number of devices that may be attached to the I^2C bus is limited only by the maximum bus loading specification of 400 pF.

11.2.1 INITIATING AND TERMINATING DATA TRANSFER

During times of no data transfer (idle time), both the clock line (SCL) and the data line (SDA) are pulled high through the external pull-up resistors. The START and STOP conditions determine the start and stop of data transmission. The START condition is defined as a high to low transition of the SDA when the SCL is high. The STOP condition is defined as a low to high transition of the SDA when the SCL is high. Figure 11-8 shows the START and STOP conditions. The master generates these conditions for starting and terminating data transfer. Due to the definition of the START and STOP conditions, when data is being transmitted, the SDA line can only change state when the SCL line is low.

FIGURE 11-8: START AND STOP CONDITIONS

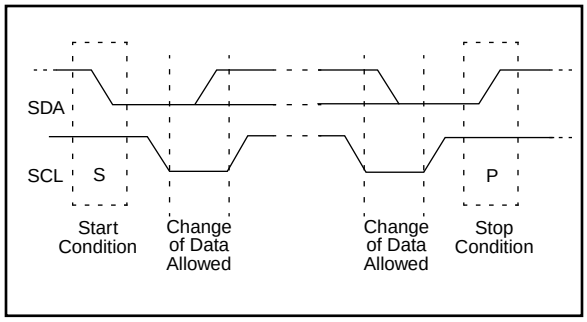

TABLE 11-2: I^2C BUS TERMINOLOGY

Term	Description
Transmitter	The device that sends the data to the bus.
Receiver	The device that receives the data from the bus.
Master	The device which initiates the transfer, generates the clock and terminates the transfer.
Slave	The device addressed by a master.
Multi-master	More than one master device in a system. These masters can attempt to control the bus at the same time without corrupting the message.
Arbitration	Procedure that ensures that only one of the master devices will control the bus. This ensure that the transfer data does not get corrupted.
Synchronization	Procedure where the clock signals of two or more devices are synchronized.

© 1997 Microchip Technology Inc.

11.2.2 ADDRESSING I^{2}C DEVICES

There are two address formats. The simplest is the 7-bit address format with a R/$\overline{W}$ bit (Figure 11-9). The more complex is the 10-bit address with a R/$\overline{W}$ bit (Figure 11-10). For 10-bit address format, two bytes must be transmitted with the first five bits specifying this to be a 10-bit address.

FIGURE 11-9: 7-BIT ADDRESS FORMAT

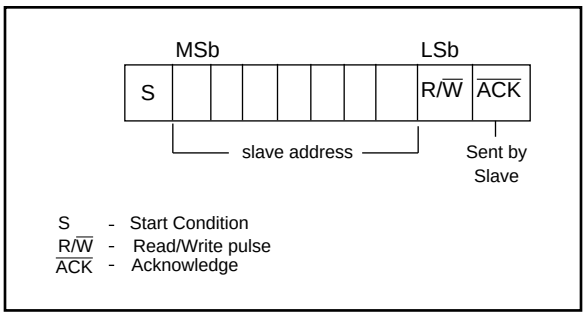

FIGURE 11-10: I^{2}C 10-BIT ADDRESS FORMAT

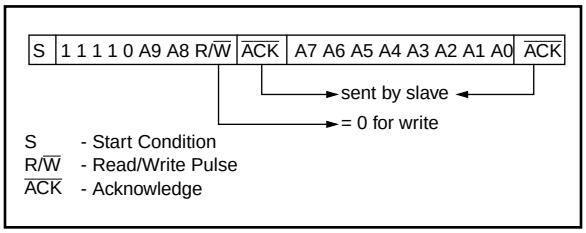

11.2.3 TRANSFER ACKNOWLEDGE

All data must be transmitted per byte, with no limit to the number of bytes transmitted per data transfer. After each byte, the slave-receiver generates an acknowledge bit ($\overline{ACK}$) (Figure 11-11). When a slave-receiver doesn't acknowledge the slave address or received data, the master must abort the transfer. The slave must leave SDA high so that the master can generate the STOP condition (Figure 11-8).

FIGURE 11-11: SLAVE-RECEIVER ACKNOWLEDGE

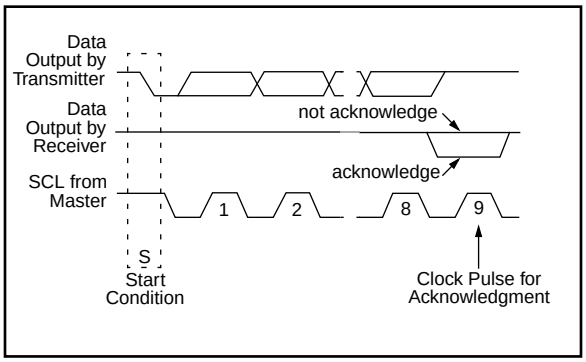

If the master is receiving the data (master-receiver), it generates an acknowledge signal for each received byte of data, except for the last byte. To signal the end of data to the slave-transmitter, the master does not generate an acknowledge (not acknowledge). The slave then releases the SDA line so the master can generate the STOP condition. The master can also generate the STOP condition during the acknowledge pulse for valid termination of data transfer.

If the slave needs to delay the transmission of the next byte, holding the SCL line low will force the master into a wait state. Data transfer continues when the slave releases the SCL line. This allows the slave to move the received data or fetch the data it needs to transfer before allowing the clock to start. This wait state technique can also be implemented at the bit level, Figure 11-12. The slave will inherently stretch the clock, when it is a transmitter, but will not when it is a receiver. The slave will have to clear the SSPCON<4> bit to enable clock stretching when it is a receiver.

FIGURE 11-12: DATA TRANSFER WAIT STATE

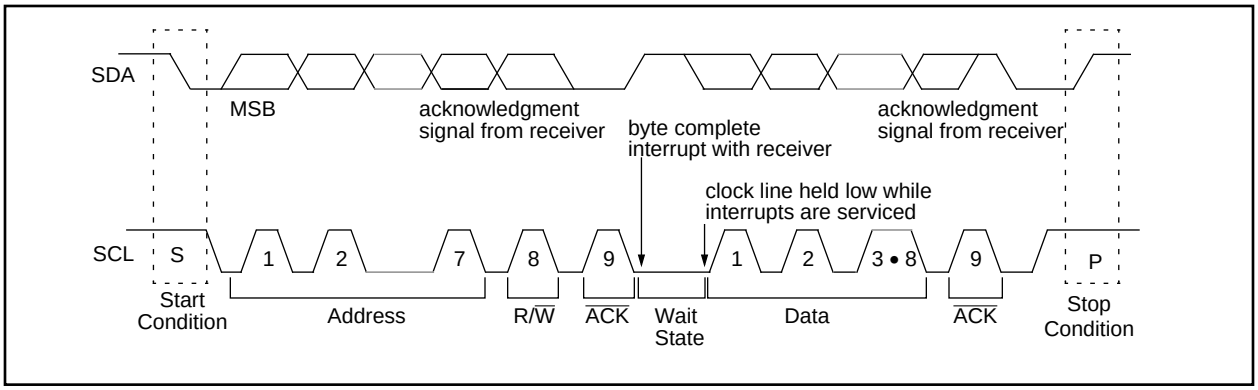

© 1997 Microchip Technology Inc.

Figure 11-13 and Figure 11-14 show Master-transmitter and Master-receiver data transfer sequences.

When a master does not wish to relinquish the bus (by generating a STOP condition), a repeated START condition (Sr) must be generated. This condition is identical to the start condition (SDA goes high-to-low while SCL is high), but occurs after a data transfer acknowledge pulse (not the bus-free state). This allows a master to send "commands" to the slave and then receive the requested information or to address a different slave device. This sequence is shown in Figure 11-15.

FIGURE 11-13: MASTER-TRANSMITTER SEQUENCE

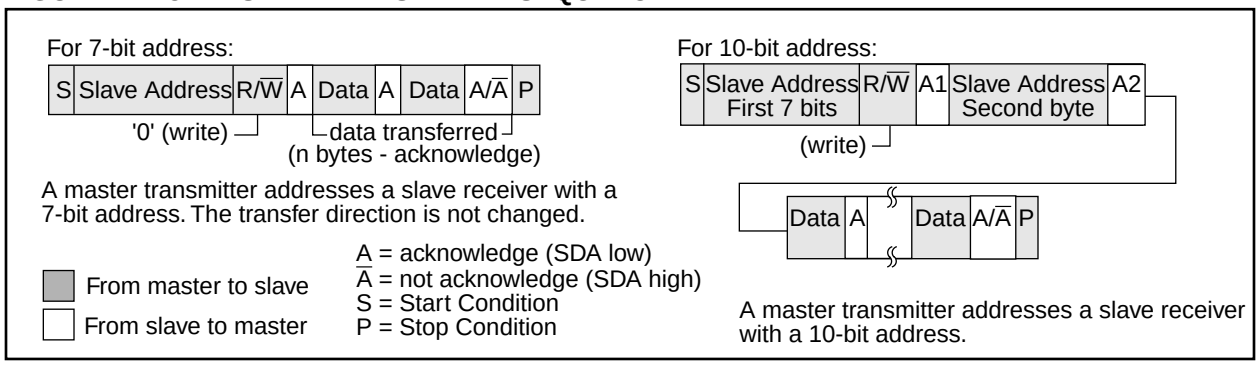

FIGURE 11-14: MASTER-RECEIVER SEQUENCE

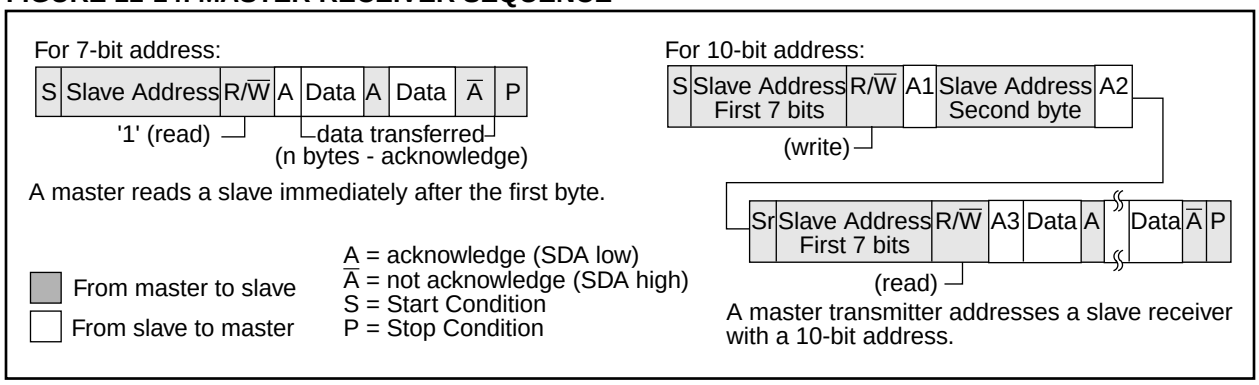

FIGURE 11-15: COMBINED FORMAT

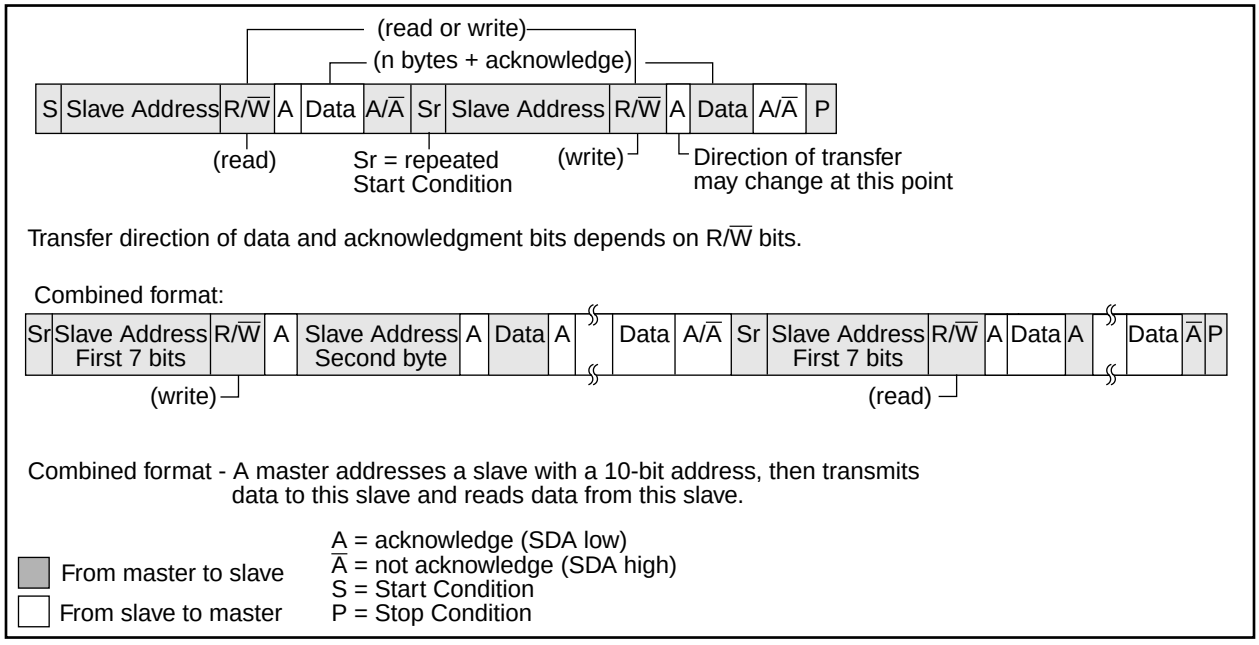

11.2.4 MULTI-MASTER

The I^2C protocol allows a system to have more than one master. This is called multi-master. When two or more masters try to transfer data at the same time, arbitration and synchronization occur.

11.2.4.1 ARBITRATION

Arbitration takes place on the SDA line, while the SCL line is high. The master which transmits a high when the other master transmits a low loses arbitration (Figure 11-16), and turns off its data output stage. A master which lost arbitration can generate clock pulses until the end of the data byte where it lost arbitration. When the master devices are addressing the same device, arbitration continues into the data.

FIGURE 11-16: MULTI-MASTER ARBITRATION (TWO MASTERS)

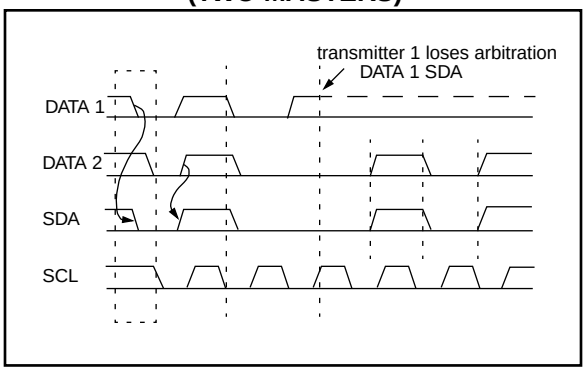

Masters that also incorporate the slave function, and have lost arbitration must immediately switch over to slave-receiver mode. This is because the winning master-transmitter may be addressing it.

Arbitration is not allowed between:

- A repeated START condition
- A STOP condition and a data bit
- A repeated START condition and a STOP condition

Care needs to be taken to ensure that these conditions do not occur.

11.2.4.2 Clock Synchronization

Clock synchronization occurs after the devices have started arbitration. This is performed using a wired-AND connection to the SCL line. A high to low transition on the SCL line causes the concerned devices to start counting off their low period. Once a device clock has gone low, it will hold the SCL line low until its SCL high state is reached. The low to high transition of this clock may not change the state of the SCL line, if another device clock is still within its low period. The SCL line is held low by the device with the longest low period. Devices with shorter low periods enter a high wait-state, until the SCL line comes high. When the SCL line comes high, all devices start counting off their high periods. The first device to complete its high period will pull the SCL line low. The SCL line high time is determined by the device with the shortest high period, Figure 11-17.

FIGURE 11-17: CLOCK SYNCHRONIZATION

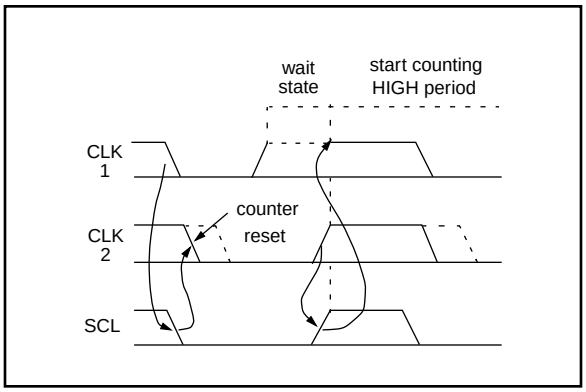

© 1997 Microchip Technology Inc.

11.3 SSP I^{2}C Operation

The SSP module in I^{2}C mode fully implements all slave functions, except general call support, and provides interrupts on start and stop bits in hardware to facilitate firmware implementations of the master functions. The SSP module implements the standard mode specifications as well as 7-bit and 10-bit addressing. Two pins are used for data transfer. These are the RC3/SCK/SCL pin, which is the clock (SCL), and the RC4/SDI/SDA pin, which is the data (SDA). The user must configure these pins as inputs or outputs through the TRISC<4:3> bits. The SSP module functions are enabled by setting SSP Enable bit SSPEN (SSPCON<5>).

FIGURE 11-18: SSP BLOCK DIAGRAM (I^{2}C MODE)

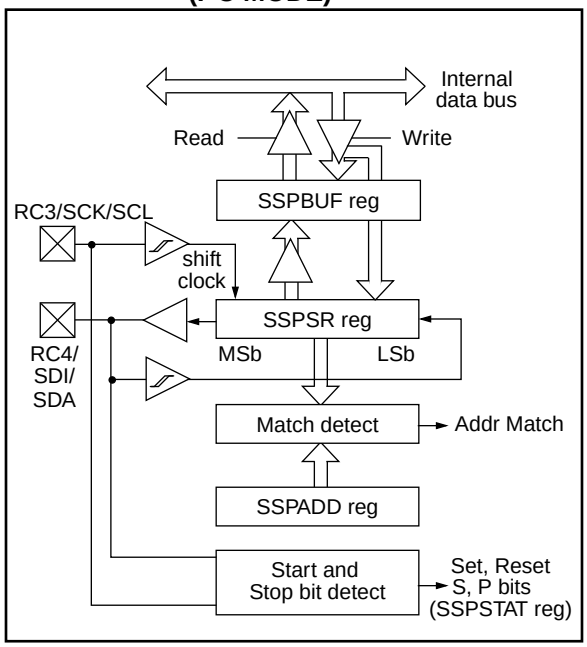

The SSP module has five registers for I^{2}C operation. These are the:

- SSP Control Register (SSPCON)
- SSP Status Register (SSPSTAT)
- Serial Receive/Transmit Buffer (SSPBUF)
- SSP Shift Register (SSPSR) - Not directly accessible
- SSP Address Register (SSPADD)

The SSPCON register allows control of the I^{2}C operation. Four mode selection bits (SSPCON<3:0>) allow one of the following I^{2}C modes to be selected:

- I^{2}C Slave mode (7-bit address)
- I^{2}C Slave mode (10-bit address)
- I^{2}C Slave mode (7-bit address), with start and stop bit interrupts enabled
- I^{2}C Slave mode (10-bit address), with start and stop bit interrupts enabled
- I^{2}C Firmware controlled Master Mode, slave is idle

Selection of any I^{2}C mode, with the SSPEN bit set, forces the SCL and SDA pins to be open drain, provided these pins are programmed to inputs by setting the appropriate TRISC bits.

The SSPSTAT register gives the status of the data transfer. This information includes detection of a START or STOP bit, specifies if the received byte was data or address if the next byte is the completion of 10-bit address, and if this will be a read or write data transfer. The SSPSTAT register is read only.

The SSPBUF is the register to which transfer data is written to or read from. The SSPSR register shifts the data in or out of the device. In receive operations, the SSPBUF and SSPSR create a doubled buffered receiver. This allows reception of the next byte to begin before reading the last byte of received data. When the complete byte is received, it is transferred to the SSPBUF register and flag bit SSPIF is set. If another complete byte is received before the SSPBUF register is read, a receiver overflow has occurred and bit SSPOV (SSPCON<6>) is set and the byte in the SSPSR is lost.

The SSPADD register holds the slave address. In 10-bit mode, the user needs to write the high byte of the address (`1111 0 A9 A8 0`). Following the high byte address match, the low byte of the address needs to be loaded (A7:A0).

11.3.1 SLAVE MODE

In slave mode, the SCL and SDA pins must be configured as inputs (TRISC<4:3> set). The SSP module will override the input state with the output data when required (slave-transmitter).

When an address is matched or the data transfer after an address match is received, the hardware automatically will generate the acknowledge ($\overline{ACK}$) pulse, and then load the SSPBUF register with the received value currently in the SSPSR register.

There are certain conditions that will cause the SSP module not to give this $\overline{ACK}$ pulse. These are if either (or both):

a) The buffer full bit BF (SSPSTAT<0>) was set before the transfer was received.

b) The overflow bit SSPOV (SSPCON<6>) was set before the transfer was received.

In this case, the SSPSR register value is not loaded into the SSPBUF, but bit SSPIF (PIR1<3>) is set. Table 11-3 shows what happens when a data transfer byte is received, given the status of bits BF and SSPOV. The shaded cells show the condition where user software did not properly clear the overflow condition. Flag bit BF is cleared by reading the SSPBUF register while bit SSPOV is cleared through software.

The SCL clock input must have a minimum high and low time for proper operation. The high and low times of the I^2C specification as well as the requirement of the SSP module is shown in timing parameter #100 and parameter #101.

11.3.1.1 ADDRESSING

Once the SSP module has been enabled, it waits for a START condition to occur. Following the START condition, the 8-bits are shifted into the SSPSR register. All incoming bits are sampled with the rising edge of the clock (SCL) line. The value of register SSPSR<7:1> is compared to the value of the SSPADD register. The address is compared on the falling edge of the eighth clock (SCL) pulse. If the addresses match, and the BF and SSPOV bits are clear, the following events occur:

a) The SSPSR register value is loaded into the SSPBUF register.

b) The buffer full bit, BF is set.

c) An $\overline{ACK}$ pulse is generated.

d) SSP interrupt flag bit, SSPIF (PIR1<3>) is set (interrupt is generated if enabled) - on the falling edge of the ninth SCL pulse.

In 10-bit address mode, two address bytes need to be received by the slave (Figure 11-10). The five Most Significant bits (MSbs) of the first address byte specify if this is a 10-bit address. Bit R/$\overline{W}$ (SSPSTAT<2>) must specify a write so the slave device will receive the second address byte. For a 10-bit address the first byte would equal '1111 0 A9 A8 0', where A9 and A8 are the two MSbs of the address. The sequence of events for a 10-bit address is as follows, with steps 7- 9 for slave-transmitter:

1. Receive first (high) byte of Address (bits SSPIF, BF, and bit UA (SSPSTAT<1>) are set).
2. Update the SSPADD register with second (low) byte of Address (clears bit UA and releases the SCL line).
3. Read the SSPBUF register (clears bit BF) and clear flag bit SSPIF.
4. Receive second (low) byte of Address (bits SSPIF, BF, and UA are set).
5. Update the SSPADD register with the first (high) byte of Address, if match releases SCL line, this will clear bit UA.
6. Read the SSPBUF register (clears bit BF) and clear flag bit SSPIF.
7. Receive repeated START condition.
8. Receive first (high) byte of Address (bits SSPIF and BF are set).
9. Read the SSPBUF register (clears bit BF) and clear flag bit SSPIF.

TABLE 11-3: DATA TRANSFER RECEIVED BYTE ACTIONS

Status Bits as Data Transfer is Received				
BF	**SSPOV**	**SSPSR → SSPBUF**	**Generate $\overline{ACK}$ Pulse**	**Set bit SSPIF (SSP Interrupt occurs if enabled)**
0	0	Yes	Yes	Yes
1	0	No	No	Yes
1	1	No	No	Yes
0	1	No	No	Yes

© 1997 Microchip Technology Inc.

11.3.1.2 RECEPTION

When the R/$\overline{W}$ bit of the address byte is clear and an address match occurs, the R/$\overline{W}$ bit of the SSPSTAT register is cleared. The received address is loaded into the SSPBUF register.

When the address byte overflow condition exists, then no acknowledge ($\overline{ACK}$) pulse is given. An overflow condition is defined as either bit BF (SSPSTAT<0>) is set or bit SSPOV (SSPCON<6>) is set.

An SSP interrupt is generated for each data transfer byte. Flag bit SSPIF (PIR1<3>) must be cleared in software. The SSPSTAT register is used to determine the status of the byte.

FIGURE 11-19: I^{2}C WAVEFORMS FOR RECEPTION (7-BIT ADDRESS)

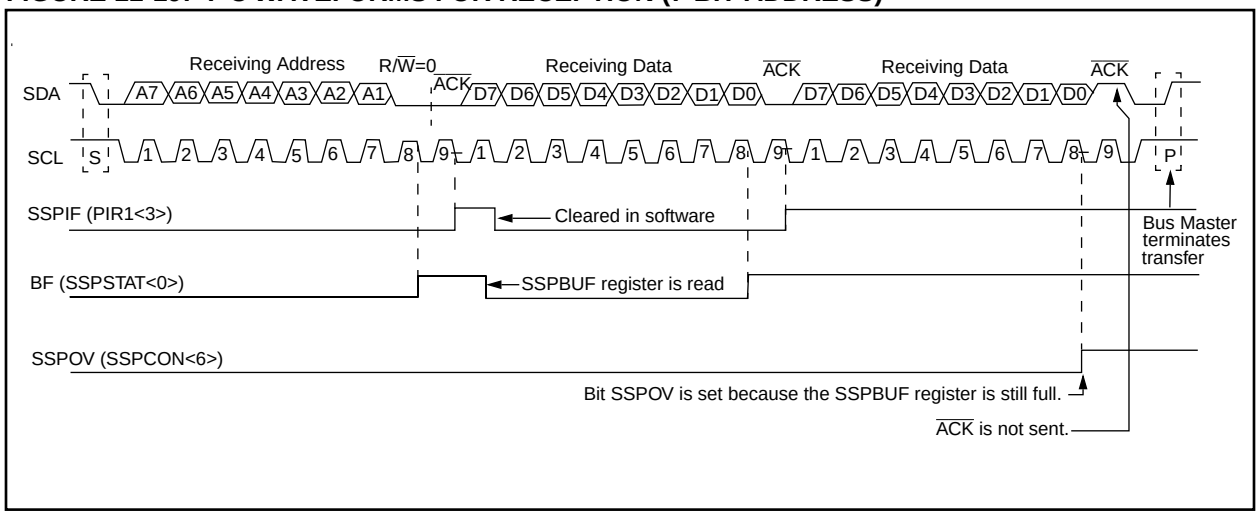

11.3.1.3 TRANSMISSION

When the R/$\overline{W}$ bit of the incoming address byte is set and an address match occurs, the R/$\overline{W}$ bit of the SSPSTAT register is set. The received address is loaded into the SSPBUF register. The $\overline{ACK}$ pulse will be sent on the ninth bit, and pin RC3/SCK/SCL is held low. The transmit data must be loaded into the SSPBUF register, which also loads the SSPSR register. Then pin RC3/SCK/SCL should be enabled by setting bit CKP (SSPCON<4>). The master must monitor the SCL pin prior to asserting another clock pulse. The slave devices may be holding off the master by stretching the clock. The eight data bits are shifted out on the falling edge of the SCL input. This ensures that the SDA signal is valid during the SCL high time (Figure 11-20).

An SSP interrupt is generated for each data transfer byte. Flag bit SSPIF must be cleared in software, and the SSPSTAT register is used to determine the status of the byte. Flag bit SSPIF is set on the falling edge of the ninth clock pulse.

As a slave-transmitter, the $\overline{ACK}$ pulse from the master-receiver is latched on the rising edge of the ninth SCL input pulse. If the SDA line was high (not $\overline{ACK}$), then the data transfer is complete. When the $\overline{ACK}$ is latched by the slave, the slave logic is reset and the slave then monitors for another occurrence of the START bit. If the SDA line was low ($\overline{ACK}$), the transmit data must be loaded into the SSPBUF register, which also loads the SSPSR register. Then pin RC3/SCK/SCL should be enabled by setting bit CKP.

FIGURE 11-20: I²C WAVEFORMS FOR TRANSMISSION (7-BIT ADDRESS)

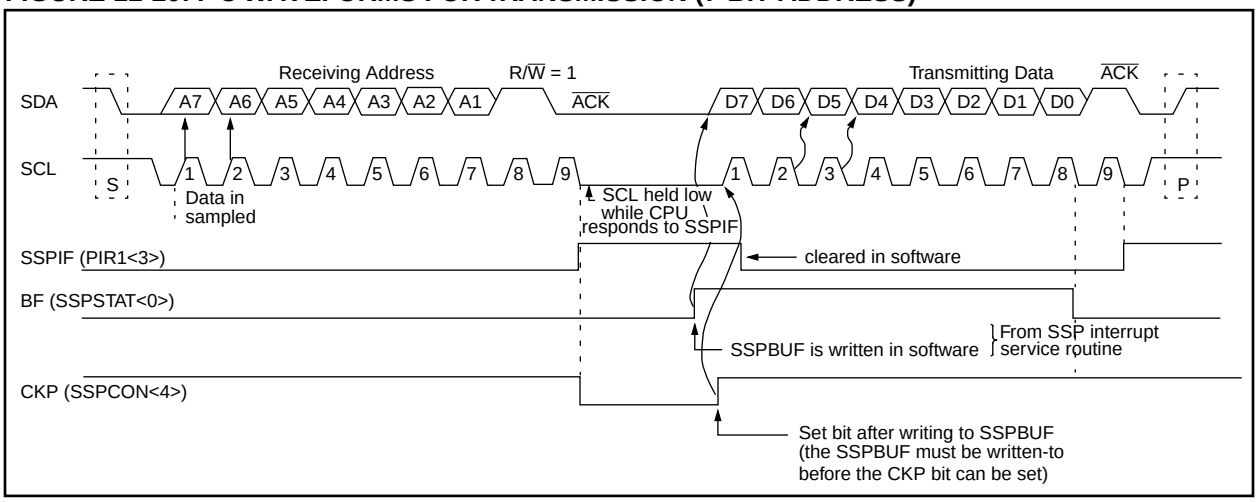

© 1997 Microchip Technology Inc.

11.3.2 MASTER MODE

Master mode of operation is supported, in firmware, using interrupt generation on the detection of the START and STOP conditions. The STOP (P) and START (S) bits are cleared from a reset or when the SSP module is disabled. The STOP and START bits will toggle based on the start and stop conditions. Control of the I^2C bus may be taken when the P bit is set, or the bus is idle with both the S and P bits clear.

In master mode the SCL and SDA lines are manipulated by clearing the corresponding TRISC<4:3> bit(s). The output level is always low, irrespective of the value(s) in PORTC<4:3>. So when transmitting data, a '1' data bit must have the TRISC<4> bit set (input) and a '0' data bit must have the TRISC<4> bit cleared (output). The same scenario is true for the SCL line with the TRISC<3> bit.

The following events will cause SSP Interrupt Flag bit, SSPIF, to be set (SSP Interrupt if enabled):

- START condition
- STOP condition
- Data transfer byte transmitted/received

Master mode of operation can be done with either the slave mode idle (SSPM3:SSPM0 = 1011) or with the slave active. When both master and slave modes are enabled, the software needs to differentiate the source(s) of the interrupt.

11.3.3 MULTI-MASTER MODE

In multi-master mode, the interrupt generation on the detection of the START and STOP conditions allows the determination of when the bus is free. The STOP (P) and START (S) bits are cleared from a reset or when the SSP module is disabled. The STOP and START bits will toggle based on the start and stop conditions. Control of the I^2C bus may be taken when bit P (SSPSTAT<4>) is set, or the bus is idle with both the S and P bits clear. When the bus is busy, enabling the SSP Interrupt will generate the interrupt when the STOP condition occurs.

In multi-master operation, the SDA line must be monitored to see if the signal level is the expected output level. This check only needs to be done when a high level is output. If a high level is expected and a low level is present, the device needs to release the SDA and SCL lines (set TRISC<4:3>). There are two stages where this arbitration can be lost, they are:

- Address Transfer
- Data Transfer

When the slave logic is enabled, the slave continues to receive. If arbitration was lost during the address transfer stage, communication to the device may be in progress. If addressed an $\overline{ACK}$ pulse will be generated. If arbitration was lost during the data transfer stage, the device will need to re-transfer the data at a later time.

TABLE 11-4: REGISTERS ASSOCIATED WITH I^2C OPERATION

Address	Name	Bit 7	Bit 6	Bit 5	Bit 4	Bit 3	Bit 2	Bit 1	Bit 0	Value on Power-on Reset	Value on all other resets
0Bh, 8Bh, 10Bh, 18Bh	INTCON	GIE	PEIE	T0IE	INTE	RBIE	T0IF	INTF	RBIF	0000 000x	0000 000u
0Ch	PIR1	LCDIF	ADIF(1)	—	—	SSPIF	CCP1IF	TMR2IF	TMR1IF	00-- 0000	00-- 0000
8Ch	PIE1	LCDIE	ADIE(1)	—	—	SSPIE	CCP1IE	TMR2IE	TMR1IE	00-- 0000	00-- 0000
13h	SSPBUF	Synchronous Serial Port Receive Buffer/Transmit Register								xxxx xxxx	uuuu uuuu
93h	SSPADD	Synchronous Serial Port (I^2C mode) Address Register								0000 0000	0000 0000
14h	SSPCON	WCOL	SSPOV	SSPEN	CKP	SSPM3	SSPM2	SSPM1	SSPM0	0000 0000	0000 0000
94h	SSPSTAT	SMP	CKE	D/$\overline{A}$	P	S	R/$\overline{W}$	UA	BF	0000 0000	0000 0000
87h	TRISC	—	—	PORTC Data Direction Control Register						--11 1111	--11 1111

Legend: x = unknown, u = unchanged, - = unimplemented read as '0'. Shaded cells are not used by SSP in I^2C mode.
Note 1: Bits ADIE and ADIF are reserved on the PIC16C923, always maintain these bits clear.

FIGURE 11-21: OPERATION OF THE I²C MODULE IN IDLE_MODE, RCV_MODE OR XMIT_MODE

```
IDLE_MODE (7-bit):
if (Addr_match)                 {       Set interrupt;
                                        if (R/W = 1)    {       Send ACK = 0;
                                                                set XMIT_MODE;
                                                        }
                                        else if (R/W = 0) set RCV_MODE;
                                }
RCV_MODE:
if ((SSPBUF=Full) OR (SSPOV = 1))
        {       Set SSPOV;
                Do not acknowledge;
        }
else    {       transfer SSPSR → SSPBUF;
                send ACK = 0;
        }
Receive 8-bits in SSPSR;
Set interrupt;
XMIT_MODE:
While ((SSPBUF = Empty) AND (CKP=0)) Hold SCL Low;
Send byte;
Set interrupt;
if ( ACK Received = 1)          {       End of transmission;
                                        Go back to IDLE_MODE;
                                }
else if ( ACK Received = 0)   Go back to XMIT_MODE;
IDLE_MODE (10-Bit):
If (High_byte_addr_match AND (R/W = 0))
        {       PRIOR_ADDR_MATCH = FALSE;
                Set interrupt;
                if ((SSPBUF = Full) OR ((SSPOV = 1))
                        {       Set SSPOV;
                                Do not acknowledge;
                        }
                else    {       Set UA = 1;
                                Send ACK = 0;
                                While (SSPADD not updated) Hold SCL low;
                                Clear UA = 0;
                                Receive Low_addr_byte;
                                Set interrupt;
                                Set UA = 1;
                                If (Low_byte_addr_match)
                                        {       PRIOR_ADDR_MATCH = TRUE;
                                                Send ACK = 0;
                                                while (SSPADD not updated) Hold SCL low;
                                                Clear UA = 0;
                                                Set RCV_MODE;
                                        }
                        }
        }
else if (High_byte_addr_match AND (R/W = 1)
        {       if (PRIOR_ADDR_MATCH)
                        {       send ACK = 0;
                                set XMIT_MODE;
                        }
        else PRIOR_ADDR_MATCH = FALSE;
        }
```


© 1997 Microchip Technology Inc.

12.0 ANALOG-TO-DIGITAL CONVERTER (A/D) MODULE

This section applies to the PIC16C924 only.

The analog-to-digital (A/D) converter module has five inputs.

The A/D allows conversion of an analog input signal to a corresponding 8-bit digital number (refer to Application Note AN546 for use of A/D Converter). The output of the sample and hold is the input into the converter, which generates the result via successive approximation. The analog reference voltage is software selectable to either the device's AVDD pin or the voltage level on the RA3/AN3/VREF pin. The A/D converter has a unique feature of being able to operate while the device is in SLEEP mode.

To operate in sleep, the A/D conversion clock must be derived from the A/D's internal RC oscillator.

The A/D module has three registers. These registers are:

- A/D Result Register (ADRES)
- A/D Control Register 0 (ADCON0)
- A/D Control Register 1 (ADCON1)

The ADCON0 register, shown in Figure 12-1, controls the operation of the A/D module. The ADCON1 register, shown in Figure 12-2, configures the functions of the port pins. The port pins can be configured as analog inputs (RA3 can also be a voltage reference) or as digital I/O.

FIGURE 12-1: ADCON0 REGISTER (ADDRESS 1Fh)

R/W-0	R/W-0	R/W-0	R/W-0	R/W-0	R/W-0	R/W-0	R/W-0
ADCS1	ADCS0	CHS2	CHS1	CHS0	GO/$\overline{\text{DONE}}$	—	ADON
bit7							bit0

R = Readable bit
W = Writable bit
U = Unimplemented bit, read as '0'
- n = Value at POR reset

bit 7-6: **ADCS1:ADCS0:** A/D Conversion Clock Select bits
00 = FOSC/2
01 = FOSC/8
10 = FOSC/32
11 = FRC (clock derived from an RC oscillation)

bit 5-3: **CHS2:CHS0**: Analog Channel Select bits
000 = channel 0, (RA0/AN0)
001 = channel 1, (RA1/AN1)
010 = channel 2, (RA2/AN2)
011 = channel 3, (RA3/AN3)
100 = channel 4, (RA5/AN4)

bit 2: **GO/$\overline{\text{DONE}}$:** A/D Conversion Status bit

If ADON = 1
1 = A/D conversion in progress (setting this bit starts the A/D conversion)
0 = A/D conversion not in progress (This bit is automatically cleared by hardware when the A/D conversion is complete)

bit 1: **Reserved**: Always maintain this bit clear

bit 0: **ADON**: A/D On bit
1 = A/D converter module is operating
0 = A/D converter module is shutoff and consumes no operating current

FIGURE 12-2: ADCON1 REGISTER (ADDRESS 9Fh)

U-0	U-0	U-0	U-0	U-0	R/W-0	R/W-0	R/W-0
—	—	—	—	—	PCFG2	PCFG1	PCFG0
bit7							bit0

R = Readable bit
W = Writable bit
U = Unimplemented bit, read as '0'
- n = Value at POR reset

bit 7-3: **Unimplemented:** Read as '0'

bit 2-0: **PCFG2:PCFG0**: A/D Port Configuration Control bits

PCFG2:PCFG0	RA0	RA1	RA2	RA5	RA3	VREF
000	A	A	A	A	A	AVDD
001	A	A	A	A	VREF	RA3
010	A	A	A	A	A	AVDD
011	A	A	A	A	VREF	RA3
100	A	A	D	D	A	AVDD
111	D	D	D	D	D	—

A = Analog input

D = Digital I/O

The ADRES register contains the result of the A/D conversion. When the A/D conversion is complete, the result is loaded into the ADRES register, the GO/$\overline{\text{DONE}}$ bit (ADCON0<2>) is cleared, and A/D interrupt flag bit ADIF is set. The block diagram of the A/D module is shown in Figure 12-3.

After the A/D module has been configured as desired, the selected channel must be acquired before the conversion is started. The analog input channels must have their corresponding TRIS bits selected as an input. To determine acquisition time, see Section 12.1. After this acquisition time has elapsed the A/D conversion can be started. The following steps should be followed for doing an A/D conversion:

1. Configure the A/D module:
   - Configure analog pins / voltage reference / and digital I/O (ADCON1)
   - Select A/D input channel (ADCON0)
   - Select A/D conversion clock (ADCON0)
   - Turn on A/D module (ADCON0)
2. Configure A/D interrupt (if desired):
   - Clear ADIF bit
   - Set ADIE bit
   - Set GIE bit
3. Wait the required acquisition time.
4. Start conversion:
   - Set GO/$\overline{\text{DONE}}$ bit (ADCON0)
5. Wait for A/D conversion to complete, by either:
   - Polling for the GO/$\overline{\text{DONE}}$ bit to be cleared

   OR
   - Waiting for the A/D interrupt
6. Read A/D Result register (ADRES), clear bit ADIF if required.
7. For next conversion, go to step 1 or step 2 as required. The A/D conversion time per bit is defined as T_{AD}. A minimum wait of $2T_{AD}$ is required before next acquisition starts.

© 1997 Microchip Technology Inc.

FIGURE 12-3: A/D BLOCK DIAGRAM

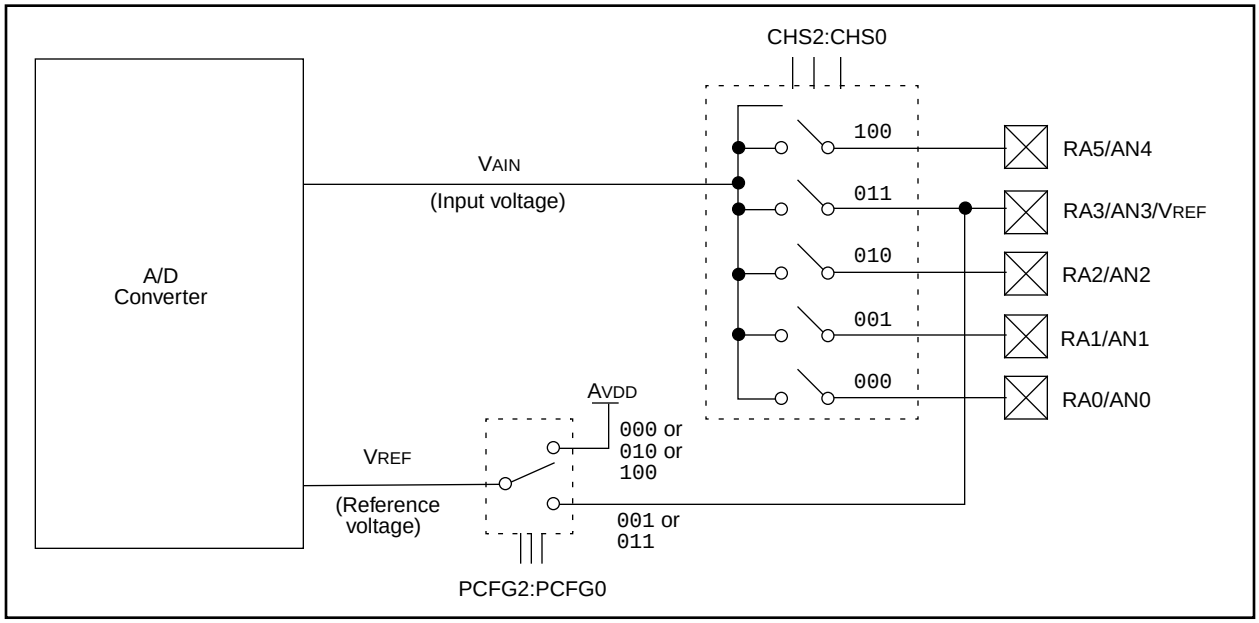

12.1 A/D Acquisition Requirements

For the A/D converter to meet its specified accuracy, the charge holding capacitor (CHOLD) must be allowed to fully charge to the input channel voltage level. The analog input model is shown in Figure 12-4. The source impedance (RS) and the internal sampling switch (RSS) impedance directly affect the time required to charge the capacitor CHOLD. The sampling switch (RSS) impedance varies over the device voltage (VDD), (Figure 12-4). The source impedance affects the offset voltage at the analog input (due to pin leakage current). **The maximum recommended impedance for analog sources is 10 kΩ.** After the analog input channel is selected (changed) this acquisition must be done before the conversion can be started.

To calculate the minimum acquisition time, Equation 12-1 may be used. This equation calculates the acquisition time to within 1/2 LSb error (512 steps for the A/D). The 1/2 LSb error is the maximum error allowed for the A/D to meet its specified accuracy.

EQUATION 12-1: A/D MINIMUM CHARGING TIME

$V_{HOLD} = (V_{REF} - (V_{REF}/512)) \cdot (1 - e^{(-T_C/C_{HOLD}(R_{IC} + R_{SS} + R_S))})$

Given: $V_{HOLD} = (V_{REF}/512)$, for 1/2 LSb resolution

The above equation reduces to:

$T_C = -(51.2\ pF)(1\ k\Omega - R_{SS} + R_S)\ \ln(1/511)$

Example 12-1 shows the calculation of the minimum required acquisition time (TACQ). This calculation is based on the following system assumptions.

CHOLD = 51.2 pF

Rs = 10 kΩ

1/2 LSb error

VDD = 5V → Rss = 7 kΩ

Temp (system max.) = 50°C

VHOLD = 0 @ t = 0

Note 1: The reference voltage (VREF) has no effect on the equation, since it cancels itself out.

Note 2: The charge holding capacitor (CHOLD) is not discharged after each conversion.

Note 3: The maximum recommended impedance for analog sources is 10 kΩ. This is required to meet the pin leakage specification.

Note 4: After a conversion has completed, a 2.0 TAD delay must complete before acquisition can begin again. During this time the holding capacitor is not connected to the selected A/D input channel.

EXAMPLE 12-1: CALCULATING THE MINIMUM REQUIRED SAMPLE TIME

TACQ = Amplifier Settling Time +
Holding Capacitor Charging Time +
Temperature Coefficient

TACQ = 5 µs + Tc + [(Temp - 25°C)(0.05 µs/°C)]

TC = -CHOLD (RIC + RSS + RS) ln(1/511)
-51.2 pF (1 kΩ + 7 kΩ + 10 kΩ) ln(0.0020)
-51.2 pF (18 kΩ) ln(0.0020)
-0.921 µs (-6.2364)
5.747 µs

TACQ = 5 µs + 5.747 µs + [(50°C - 25°C)(0.05 µs/°C)]
10.747 µs + 1.25 µs
11.997 µs

FIGURE 12-4: ANALOG INPUT MODEL

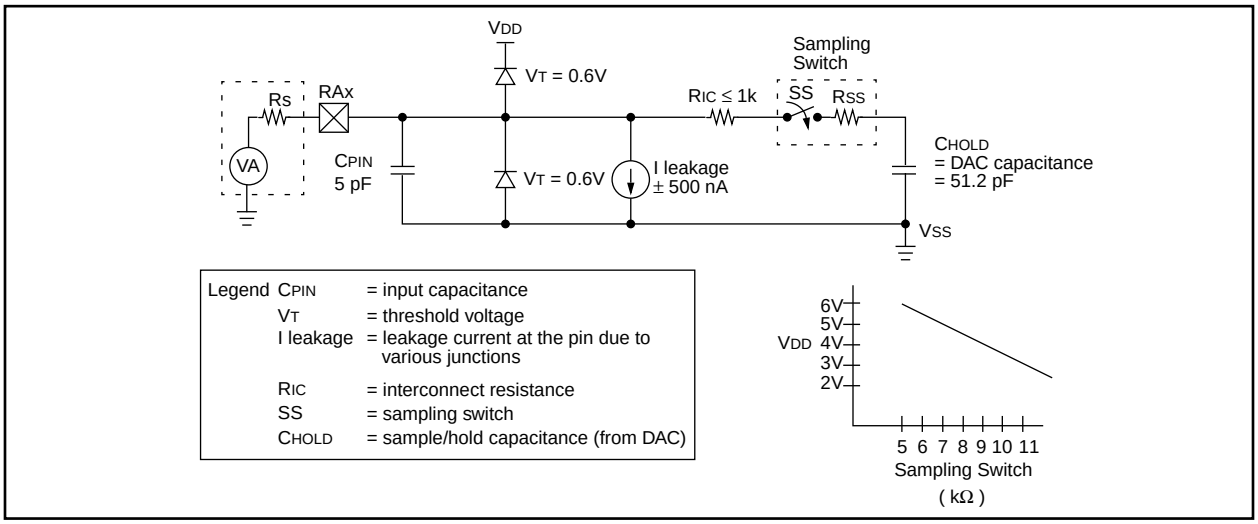

© 1997 Microchip Technology Inc.

12.2 Selecting the A/D Conversion Clock

The A/D conversion time per bit is defined as TAD. The A/D conversion requires 9.5 TAD per 8-bit conversion. The source of the A/D conversion clock is software selected. The four possible options for TAD are:

- 2TOSC
- 8TOSC
- 32TOSC
- Internal RC oscillator

For correct A/D conversions, the A/D conversion clock (TAD) must be selected to ensure a minimum TAD time of 1.6 µs.

Table 12-1 shows the resultant TAD times derived from the device operating frequencies and the A/D clock source selected.

12.3 Configuring Analog Port Pins

The ADCON1 and TRISA registers control the operation of the A/D port pins. The port pins that are desired as analog inputs must have their corresponding TRIS bits set (input). If the TRIS bit is cleared (output), the digital output level (VOH or VOL) will be converted.

The A/D operation is independent of the state of the CHS2:CHS0 bits and the TRIS bits.

Note 1: When reading the port register, all pins configured as analog inputs will read as cleared (a low level). Pins configured as digital inputs, will convert an analog input. Analog levels on a digitally configured input will not affect the conversion accuracy.

Note 2: Analog levels on any pin that is defined as a digital input (including the AN4:AN0 pins), may cause the input buffer to consume current that is out of the devices specification.

TABLE 12-1: TAD vs. DEVICE OPERATING FREQUENCIES

A/D Clock Source (TAD)		Device Frequency			
Operation	**ADCS1:ADCS0**	**8 MHz**	**5 MHz**	**1.25 MHz**	**333.33 kHz**
2TOSC	00	250 ns(2)	400 ns(2)	1.6 µs	6 µs
8TOSC	01	1 µs	1.6 µs	6.4 µs	24 µs(3)
32TOSC	10	4 µs	6.4 µs	25.6 µs(3)	96 µs(3)
RC	11	2 - 6 µs(1,4)	2 - 6 µs(1,4)	2 - 6 µs(1,4)	2 - 6 µs(1)

Legend: Shaded cells are outside of recommended range.

Note 1: The RC source has a typical TAD time of 4 µs.
2: These values violate the minimum required TAD time.
3: For faster conversion times, the selection of another clock source is recommended.
4: When derived frequency is greater than 1 MHz, the RC A/D conversion clock source is recommended for sleep mode only
5: For extended voltage devices (LC), please refer to the electrical specifications section.

12.4 A/D Conversions

Example 12-2 show how to perform an A/D conversion. The RA pins are configured as analog inputs. The analog reference (V_{REF}) is the device V_{DD}. The A/D interrupt is enabled, and the A/D conversion clock is FRC. The conversion is performed on the RA0 pin (channel0).

Note:	The GO/$\overline{\text{DONE}}$ bit should **NOT** be set in the same instruction that turns on the A/D.

Clearing the GO/$\overline{\text{DONE}}$ bit during a conversion will abort the current conversion. The ADRES register will NOT be updated with the partially completed A/D conversion sample. That is, the ADRES register will continue to contain the value of the last completed conversion (or the last value written to the ADRES register). After the A/D conversion is aborted, a $2T_{AD}$ wait is required before the next acquisition is started. After this $2T_{AD}$ wait, an acquisition is automatically started on the selected channel.

EXAMPLE 12-2: DOING AN A/D CONVERSION

```
     BCF     STATUS, RP1         ; Select Bank1
     BSF     STATUS, RP0         ;
     CLRF    ADCON1              ; Configure A/D inputs
     BSF     PIE1,   ADIE        ; Enable A/D interrupts
     BCF     STATUS, RP0         ; Select Bank0
     MOVLW   0xC1                ; RC Clock, A/D is on, Channel 0 is selected
     MOVWF   ADCON0              ;
     BCF     PIR1,   ADIF        ; Clear A/D interrupt flag bit
     BSF     INTCON, PEIE        ; Enable peripheral interrupts
     BSF     INTCON, GIE         ; Enable all interrupts
;
;  Ensure that the required acquisition time for the selected input channel has elapsed.
;  Then the conversion may be started.
;
     BSF     ADCON0, GO          ; Start A/D Conversion
       :                         ; The ADIF bit will be set and the GO/DONE bit
       :                         ;  is cleared upon completion of the A/D Conversion.
```


© 1997 Microchip Technology Inc.

12.4.1 FASTER CONVERSION - LOWER RESOLUTION TRADE-OFF

Not all applications require a result with 8-bits of resolution, but may instead require a faster conversion time. The A/D module allows users to make the trade-off of conversion speed to resolution. Regardless of the resolution required, the acquisition time is the same. To speed up the conversion, the clock source of the A/D module may be switched so that the T_{AD} time violates the minimum specified time (see the applicable electrical specification). Once the T_{AD} time violates the minimum specified time, all the following A/D result bits are not valid (see A/D Conversion Timing in the Electrical Specifications section.) The clock sources may only be switched between the three oscillator versions (cannot be switched from/to RC). The equation to determine the time before the oscillator can be switched is as follows:

Conversion time = $2T_{AD} + N \bullet T_{AD} + (8 - N)(2T_{OSC})$
Where: N = number of bits of resolution required.

Since the T_{AD} is based from the device oscillator, the user must use some method (a timer, software loop, etc.) to determine when the A/D oscillator may be changed. Example 12-3 shows a comparison of time required for a conversion with 4-bits of resolution, versus the 8-bit resolution conversion. The example is for devices operating at 8 MHz (The A/D clock is programmed for $32T_{OSC}$), and assumes that immediately after $6T_{AD}$, the A/D clock is programmed for $2T_{OSC}$.

The $2T_{OSC}$ violates the minimum T_{AD} time, therefore the last 4-bits will not be converted to correct values.

EXAMPLE 12-3: 4-BIT vs. 8-BIT CONVERSION TIMES

	Freq. (MHz)	Resolution	
		4-bit	8-bit
T_{AD}	8	1.6 µs	1.6 µs
T_{OSC}	8	12.5 ns	125 ns
$2T_{AD} + N \bullet T_{AD} + (8 - N)(2T_{OSC})$	8	10.6 µs	16 µs

12.5 A/D Operation During Sleep

The A/D module can operate during SLEEP mode. This requires that the A/D clock source be set to RC (ADCS1:ADCS0 = 11). When the RC clock source is selected, the A/D module waits one instruction cycle before starting the conversion. This allows the SLEEP instruction to be executed, which eliminates all digital switching noise from the conversion. When the conversion is completed the GO/$\overline{\text{DONE}}$ bit will be cleared, and the result loaded into the ADRES register. If the A/D interrupt is enabled, the device will wake-up from SLEEP. If the A/D interrupt is not enabled, the A/D module will then be turned off, although the ADON bit will remain set.

When the A/D clock source is another clock option (not RC), a SLEEP instruction will cause the present conversion to be aborted and the A/D module to be turned off, though the ADON bit will remain set.

Turning off the A/D places the A/D module in its lowest current consumption state.

Note:	For the A/D module to operate in SLEEP, the A/D clock source must be set to RC (ADCS1:ADCS0 = 11). To perform an A/D conversion in SLEEP, ensure the SLEEP instruction immediately follows the instruction that sets the GO/$\overline{\text{DONE}}$ bit.

12.6 A/D Accuracy/Error

The absolute accuracy specified for the A/D converter includes the sum of all contributions for quantization error, integral error, differential error, full scale error, offset error, and monotonicity. It is defined as the maximum deviation from an actual transition versus an ideal transition for any code. The absolute error of the A/D converter is specified at < ±1 LSb for $V_{DD} = V_{REF}$ (over the device's specified operating range). However, the accuracy of the A/D converter will degrade as V_{DD} diverges from V_{REF}.

For a given range of analog inputs, the output digital code will be the same. This is due to the quantization of the analog input to a digital code. Quantization error is typically ± 1/2 LSb and is inherent in the analog to digital conversion process. The only way to reduce quantization error is to increase the resolution of the A/D converter.

Offset error measures the first actual transition of a code versus the first ideal transition of a code. Offset error shifts the entire transfer function. Offset error can be calibrated out of a system or introduced into a system through the interaction of the total leakage current and source impedance at the analog input.

Gain error measures the maximum deviation of the last actual transition and the last ideal transition adjusted for offset error. This error appears as a change in slope of the transfer function. The difference in gain error to full scale error is that full scale does not take offset error into account. Gain error can be calibrated out in software.

Linearity error refers to the uniformity of the code changes. Linearity errors cannot be calibrated out of the system. Integral non-linearity error measures the actual code transition versus the ideal code transition adjusted by the gain error for each code.

Differential non-linearity measures the maximum actual code width versus the ideal code width. This measure is unadjusted.

The maximum pin leakage current is ± 1 μA.

In systems where the device frequency is low, use of the A/D RC clock is preferred. At moderate to high frequencies, T_{AD} should be derived from the device oscillator. T_{AD} must not violate the minimum and should be ≤ 8 μs for preferred operation. This is because T_{AD}, when derived from T_{OSC}, is kept away from on-chip phase clock transitions. This reduces, to a large extent, the effects of digital switching noise. This is not possible with the RC derived clock. The loss of accuracy due to digital switching noise can be significant if many I/O pins are active.

In systems where the device will enter SLEEP mode after the start of the A/D conversion, the RC clock source selection is required. In this mode, the digital noise from the modules in SLEEP are stopped. This method gives high accuracy.

12.7 Effects of a RESET

A device reset forces all registers to their reset state. This forces the A/D module to be turned off, and any conversion is aborted.

The value that is in the ADRES register is not modified for a Power-on Reset. The ADRES register will contain unknown data after a Power-on Reset.

© 1997 Microchip Technology Inc.

12.8 Use of the CCP Trigger

An A/D conversion can be started by the "special event trigger" of the CCP1 module. This requires that the CCP1M3:CCP1M0 bits (CCP1CON<3:0>) be programmed as 1011 and that the A/D module is enabled (ADON bit is set). When the trigger occurs, the GO/$\overline{\text{DONE}}$ bit will be set, starting the A/D conversion, and the Timer1 counter will be reset to zero. Timer1 is reset to automatically repeat the A/D acquisition period with minimal software overhead (moving the ADRES to the desired location). The appropriate analog input channel must be selected and the minimum acquisition done before the "special event trigger" sets the GO/$\overline{\text{DONE}}$ bit (starts a conversion).

If the A/D module is not enabled (ADON is cleared), then the "special event trigger" will be ignored by the A/D module, but will still reset the Timer1 counter.

12.9 Connection Considerations

If the input voltage exceeds the rail values (V_{SS} or V_{DD}) by greater than 0.2V, then the accuracy of the conversion is out of specification.

An external RC filter is sometimes added for anti-aliasing of the input signal. The R component should be selected to ensure that the total source impedance is kept under the 10 kΩ recommended specification. Any external components connected (via hi-impedance) to an analog input pin (capacitor, zener diode, etc.) should have very little leakage current at the pin.

12.10 Transfer Function

The ideal transfer function of the A/D converter is as follows: the first transition occurs when the analog input voltage (V_{AIN}) is Analog V_{REF} / 256 (Figure 12-5).

FIGURE 12-5: A/D TRANSFER FUNCTION

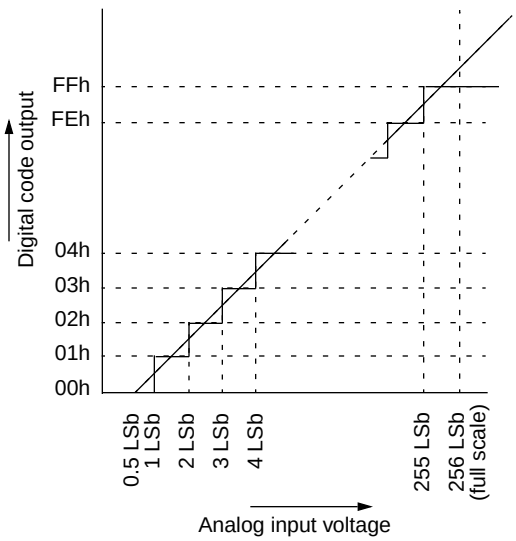

FIGURE 12-6: FLOWCHART OF A/D OPERATION

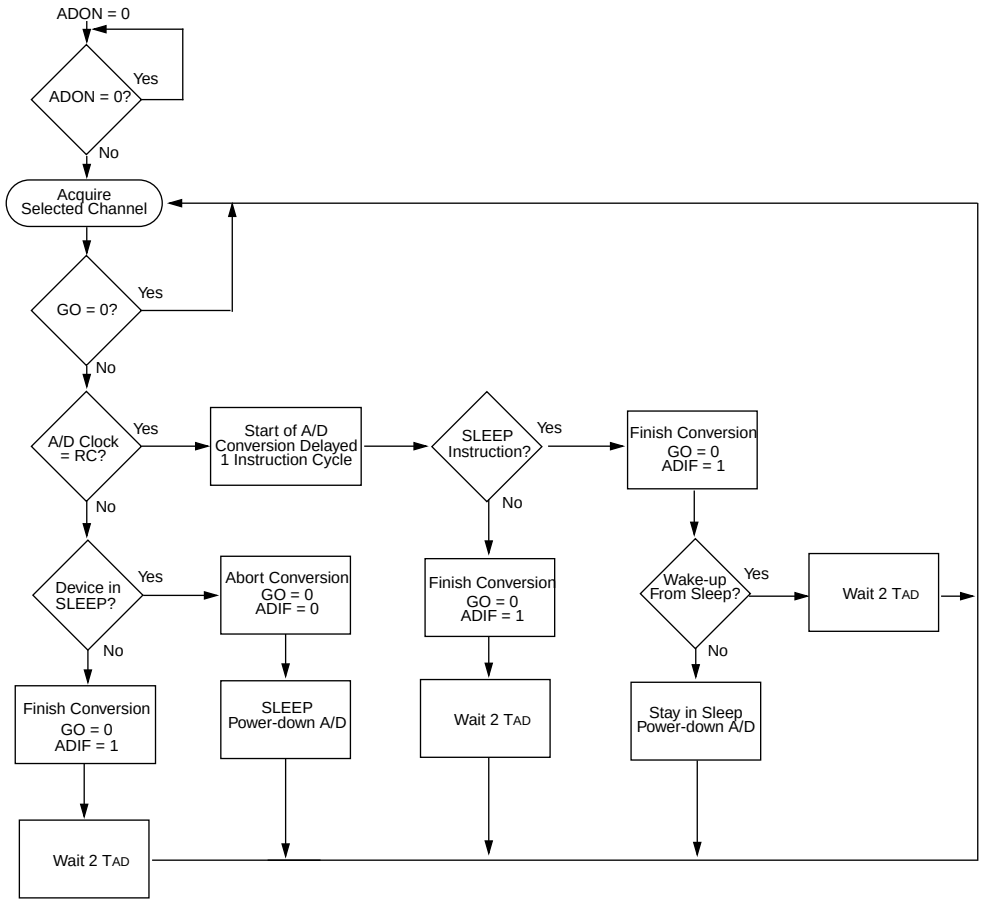

TABLE 12-2: SUMMARY OF A/D REGISTERS

Address	Name	Bit 7	Bit 6	Bit 5	Bit 4	Bit 3	Bit 2	Bit 1	Bit 0	Value on Power-on Reset	Value on all other Resets
0Bh, 8Bh, 10Bh, 18Bh	INTCON	GIE	PEIE	T0IE	INTE	RBIE	T0IF	INTF	RBIF	0000 000x	0000 000u
0Ch	PIR1	LCDIF	ADIF	—	—	SSPIF	CCP1IF	TMR2IF	TMR1IF	00-- 0000	00-- 0000
8Ch	PIE1	LCDIE	ADIE	—	—	SSPIE	CCP1IE	TMR2IE	TMR1IE	00-- 0000	00-- 0000
1Eh	ADRES	A/D Result Register								xxxx xxxx	uuuu uuuu
1Fh	ADCON0	ADCS1	ADCS0	CHS2	CHS1	CHS0	GO/$\overline{\text{DONE}}$	(1)	ADON	0000 0000	0000 0000
9Fh	ADCON1	—	—	—	—	—	PCFG2	PCFG1	PCFG0	---- -000	---- -000
05h	PORTA	—	—	RA5	RA4	RA3	RA2	RA1	RA0	--0x 0000	--0u 0000
85h	TRISA	—	—	PORTA Data Direction Control Register						--11 1111	--11 1111

Legend: x = unknown, u = unchanged, - = unimplemented read as '0'. Shaded cells are not used for A/D conversion.
Note 1: Bit1 of ADCON0 is reserved, always maintain this bit clear.

© 1997 Microchip Technology Inc.

13.0 LCD MODULE

The LCD module generates the timing control to drive a static or multiplexed LCD panel, with support for up to 32 segments multiplexed with up to 4 commons. It also provides control of the LCD pixel data.

The interface to the module consists of 3 control registers (LCDCON, LCDSE, and LCDPS) used to define the timing requirements of the LCD panel and up to 16 LCD data registers (LCD00-LCD15) that represent the array of the pixel data. In normal operation, the control registers are configured to match the LCD panel being used. Primarily, the initialization information consists of selecting the number of commons required by the LCD panel, and then specifying the LCD Frame clock rate to be used by the panel.

Once the module is initialized for the LCD panel, the individual bits of the LCD data registers are cleared/set to represent a clear/dark pixel respectively.

Once the module is configured, the LCDEN (LCDCON<7>) bit is used to enable or disable the LCD module. The LCD panel can also operate during sleep by clearing the SLPEN (LCDCON<6>) bit.

Figure 13-4 through Figure 13-7 provides waveforms for Static, 1/2, 1/3, and 1/4 MUX drives.

FIGURE 13-1: LCDCON REGISTER (ADDRESS 10Fh)

R/W-0	R/W-0	U-0	R/W-0	R/W-0	R/W-0	R/W-0	R/W-0
LCDEN	SLPEN	—	VGEN	CS1	CS0	LMUX1	LMUX0
bit7							bit0

R =Readable bit
W =Writable bit
U =Unimplemented bit, Read as ‘0’
-n =Value at POR reset

bit 7: **LCDEN**: Module drive enable bit
1 = LCD drive enabled
0 = LCD drive disabled

bit 6: **SLPEN**: LCD display sleep enable
1 = LCD module will stop operating during SLEEP
0 = LCD module will continue to display during SLEEP

bit 5: **Unimplemented:** Read as '0'

bit 4: **VGEN**: Voltage Generator Enable
1 = Internal LCD Voltage Generator Enabled, (powered-up)
0 = Internal LCD Voltage Generator powered-down, voltage is expected to be provided externally

bit 3-2: **CS1:CS0**: Clock Source Select bits
00 = Fosc/256
01 = T1CKI (Timer1)
1x = Internal RC oscillator

bit 1-0: **LMUX1:LMUX0**: Common Selection bits
Specifies the number of commons and the bias method

LMUX1:LMUX0	MULTIPLEX	BIAS	Max # of Segments
00	Static (COM0)	Static	32
01	1/2 (COM0, 1)	1/3	31
10	1/3 (COM0, 1, 2)	1/3	30
11	1/4 (COM0, 1, 2, 3)	1/3	29

FIGURE 13-2: LCD MODULE BLOCK DIAGRAM

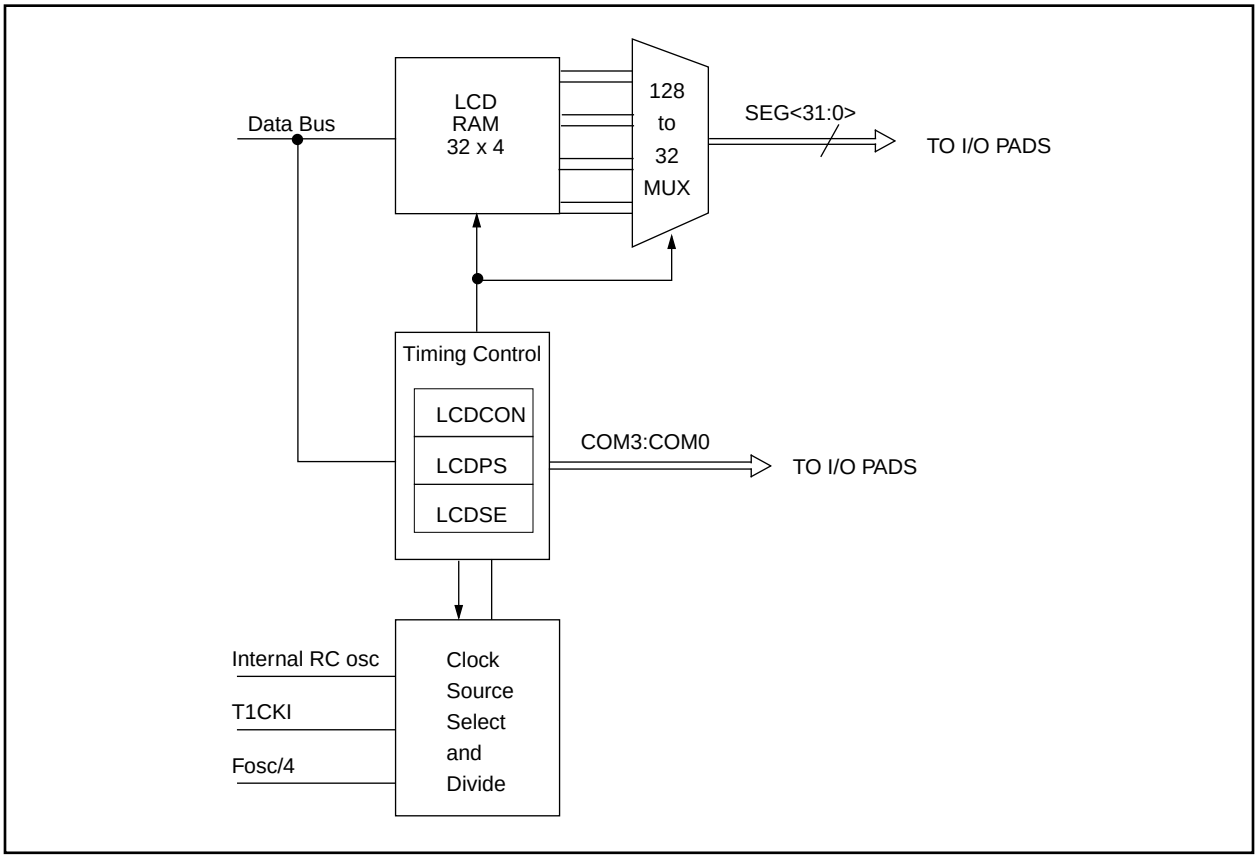

FIGURE 13-3: LCDPS REGISTER (ADDRESS 10Eh)

U-0	U-0	U-0	U-0	R/W-0	R/W-0	R/W-0	R/W-0
—	—	—	—	LP3	LP2	LP1	LP0
bit7							bit0

R =Readable bit
W =Writable bit
U =Unimplemented bit, Read as ‘0’
-n =Value at POR reset

bit 7-4: **Unimplemented,** read as '0'

bit 3-0: **LP3:LP0**: Frame Clock Prescale Selection bits

LMUX1:LMUX0	Multiplex	Frame Frequency =
00	Static	Clock source / (128 * (LP3:LP0 + 1))
01	1/2	Clock source / (128 * (LP3:LP0 + 1))
10	1/3	Clock source / (96 * (LP3:LP0 + 1))
11	1/4	Clock source / (128 * (LP3:LP0 + 1))

© 1997 Microchip Technology Inc.

FIGURE 13-4: WAVEFORMS IN STATIC DRIVE

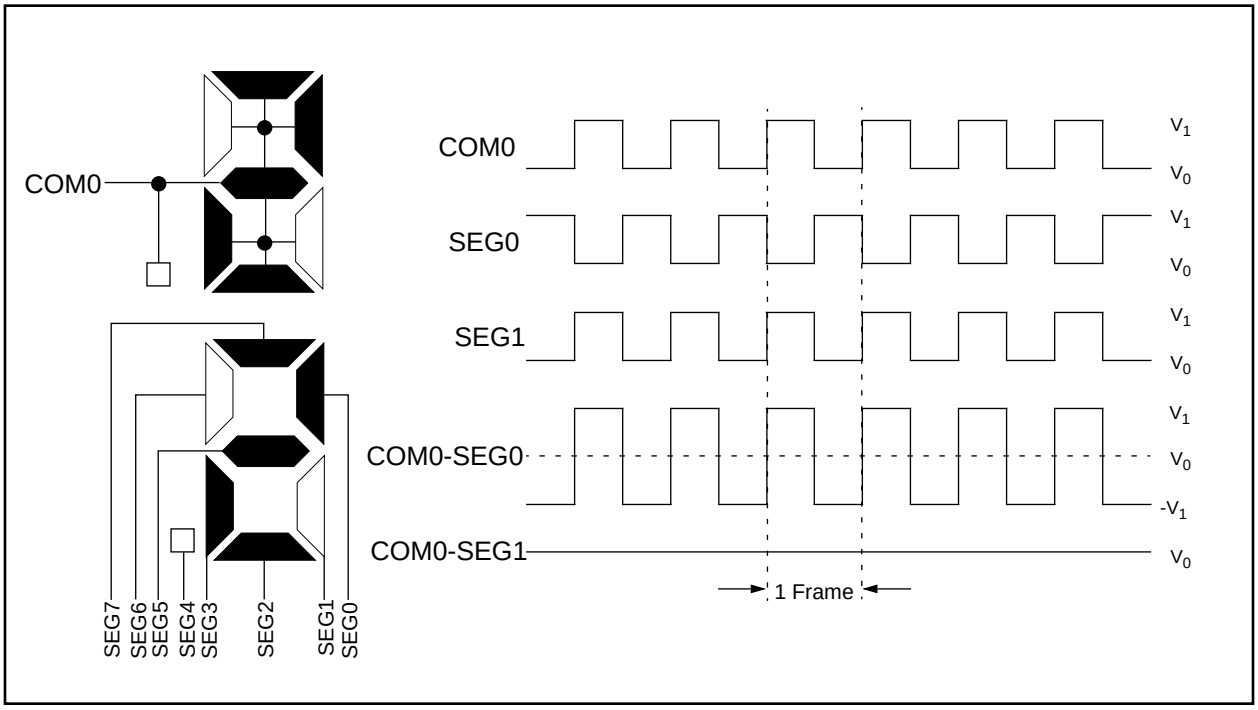

FIGURE 13-5: WAVEFORMS IN 1/2 MUX, 1/3 BIAS DRIVE

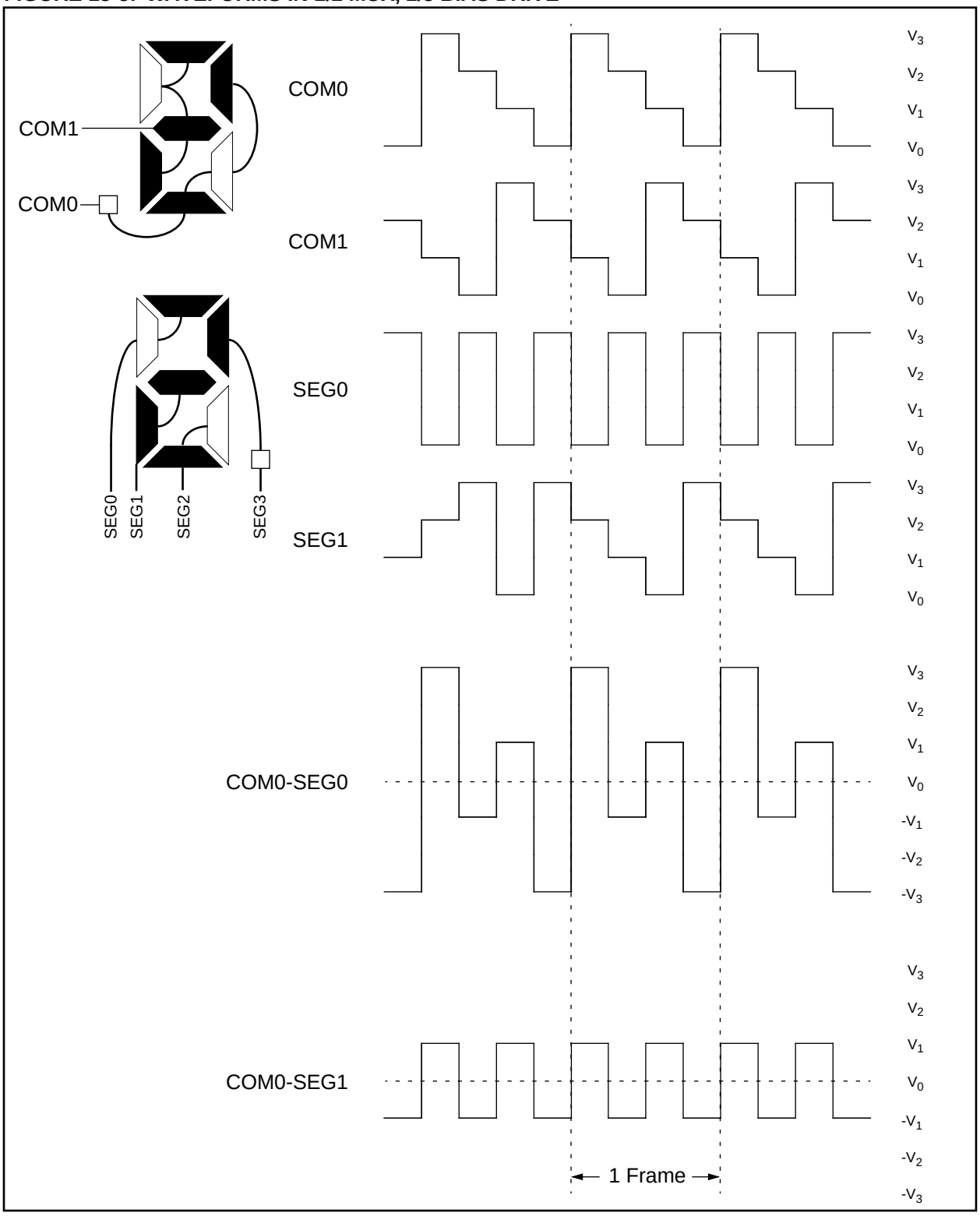

© 1997 Microchip Technology Inc.

FIGURE 13-6: WAVEFORMS IN 1/3 MUX, 1/3 BIAS

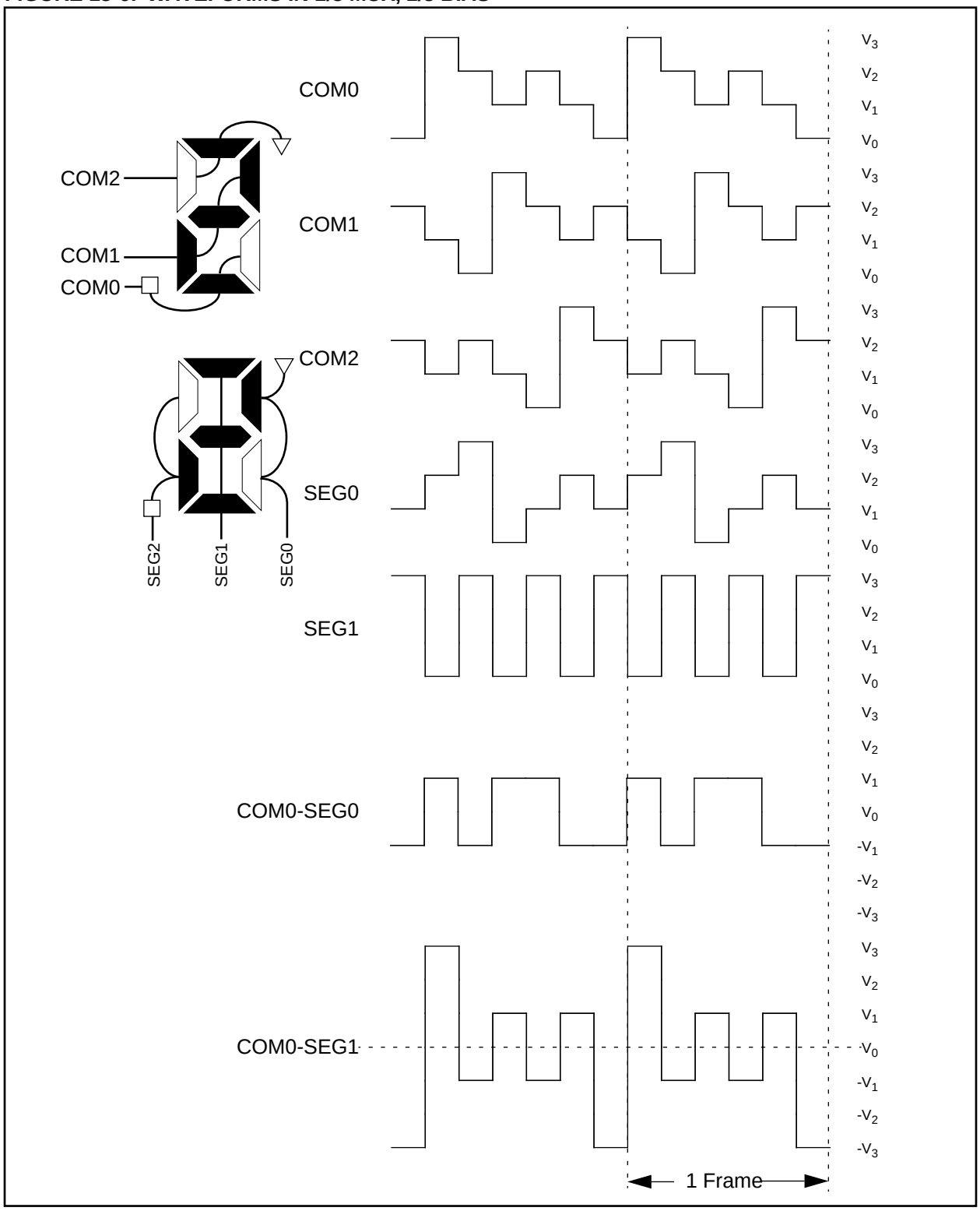

FIGURE 13-7: WAVEFORMS IN 1/4 MUX, 1/3 BIAS

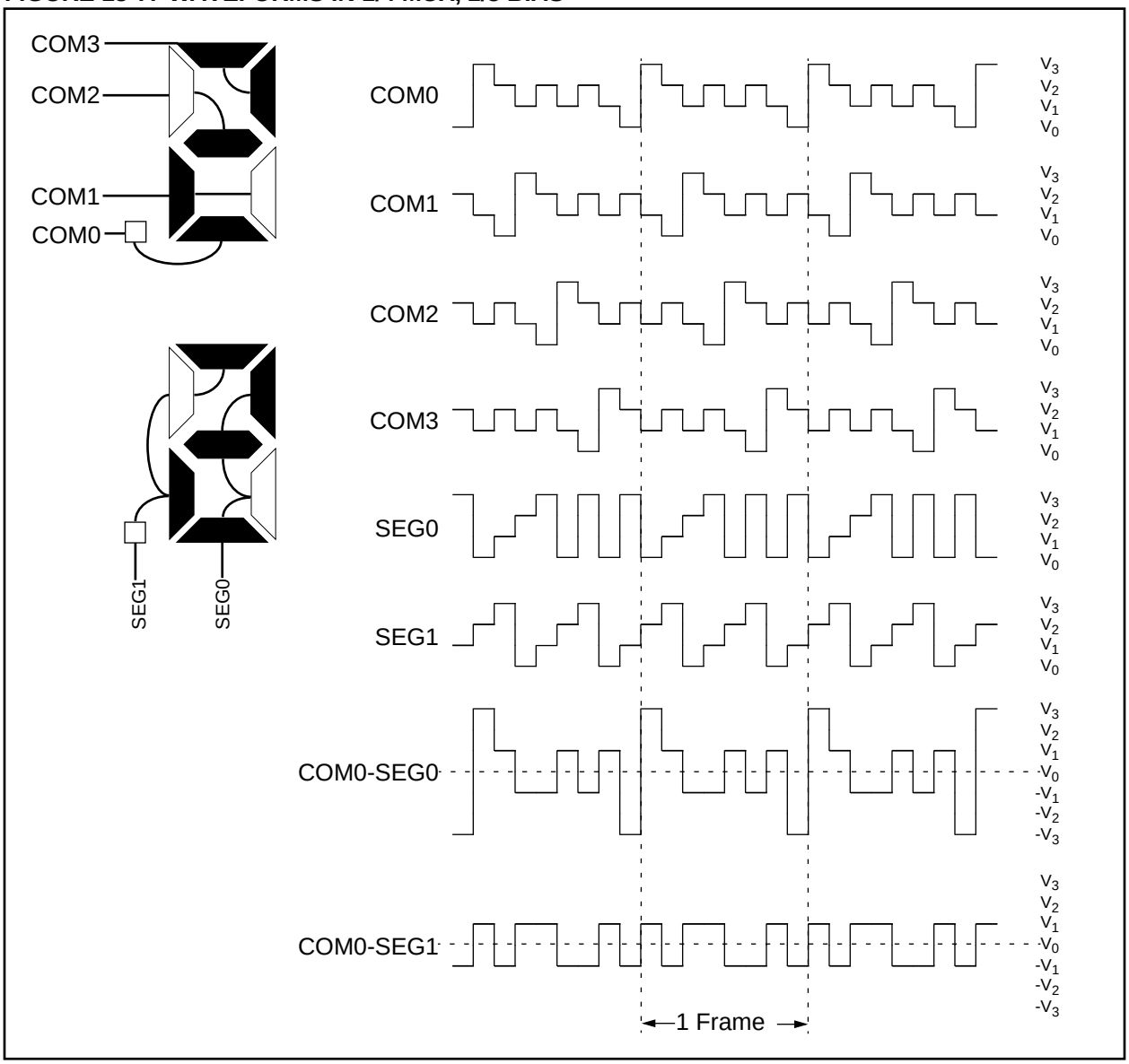

© 1997 Microchip Technology Inc.

13.1 LCD Timing

The LCD module has 3 possible clock source inputs and supports static, 1/2, 1/3, and 1/4 multiplexing.

13.1.1 TIMING CLOCK SOURCE SELECTION

The clock sources for the LCD timing generation are:

- Internal RC oscillator
- Timer1 oscillator
- System clock divided by 256

The first timing source is an internal RC oscillator which runs at a nominal frequency of 14 kHz. This oscillator provides a lower speed clock which may be used to continue running the LCD while the processor is in sleep. The RC oscillator will power-down when it is not selected or when the LCD module is disabled.

The second source is the Timer1 external oscillator. This oscillator provides a lower speed clock which may be used to continue running the LCD while the processor is in sleep. It is assumed that the frequency provided on this oscillator will be 32 kHz. To use the Timer1 oscillator as a LCD module clock source, it is only necessary to set the T1OSCEN (T1CON<3>) bit.

The third source is the system clock divided by 256. This divider ratio is chosen to provide about 32 kHz output when the external oscillator is 8 MHz. The divider is not programmable. Instead the LCDPS register is used to set the LCD frame clock rate.

All of the clock sources are selected with bits CS1:CS0 (LCDCON<3:2>). Refer to Figure 13-1 for details of the register programming.

FIGURE 13-8: LCD CLOCK GENERATION

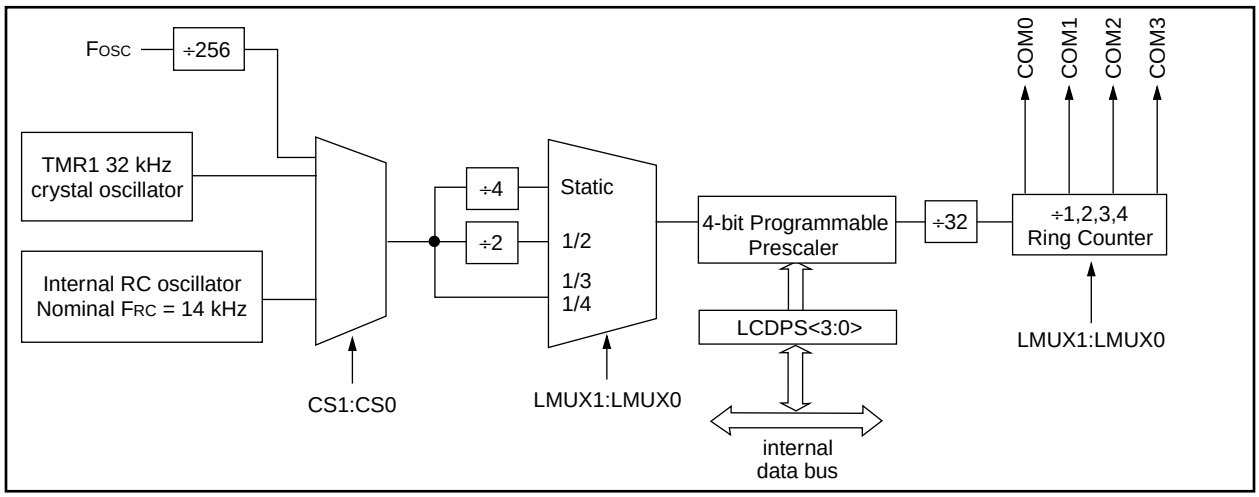

13.1.2 MULTIPLEX TIMING GENERATION

The timing generation circuitry will generate 1 to 4 common clocks based on the display mode selected. The mode is specified by bits LMUX1:LMUX0 (LCDCON<1:0>). Table 13-1 shows the formulas for calculating the frame frequency.

TABLE 13-1: FRAME FREQUENCY FORMULAS

Multiplex	Frame Frequency =
Static	Clock source / (128 * (LP3:LP0 + 1))
1/2	Clock source / (128 * (LP3:LP0 + 1))
1/3	Clock source / (96 * (LP3:LP0 + 1))
1/4	Clock source / (128 * (LP3:LP0 + 1))

TABLE 13-2: APPROX. FRAME FREQ IN Hz USING TIMER1 @ 32.768 kHz OR Fosc @ 8 MHz

LP3:LP0	Static	1/2	1/3	1/4
2	85	85	114	85
3	64	64	85	64
4	51	51	68	51
5	43	43	57	43
6	37	37	49	37
7	32	32	43	32

TABLE 13-3: APPROX. FRAME FREQ IN Hz USING INTERNAL RC OSC @ 14 kHz

LP3:LP0	Static	1/2	1/3	1/4
0	109	109	146	109
1	55	55	73	55
2	36	36	49	36
3	27	27	36	27

© 1997 Microchip Technology Inc.

13.2 LCD Interrupts

The LCD timing generation provides an interrupt that defines the LCD frame timing. This interrupt can be used to coordinate the writing of the pixel data with the start of a new frame. Writing pixel data at the frame boundary allows a visually crisp transition of the image. This interrupt can also be used to synchronize external events to the LCD. For example, the interface to an external segment driver, such as a Microchip AY0438, can be synchronized for segment data update to the LCD frame.

A new frame is defined to begin at the leading edge of the COM0 common signal. The interrupt will be set immediately after the LCD controller completes accessing all pixel data required for a frame. This will occur at a certain fixed time before the frame boundary as shown in Figure 13-9. The LCD controller will begin to access data for the next frame within T_{FWR} after the interrupt.

FIGURE 13-9: EXAMPLE WAVEFORMS IN 1/4 MUX DRIVE

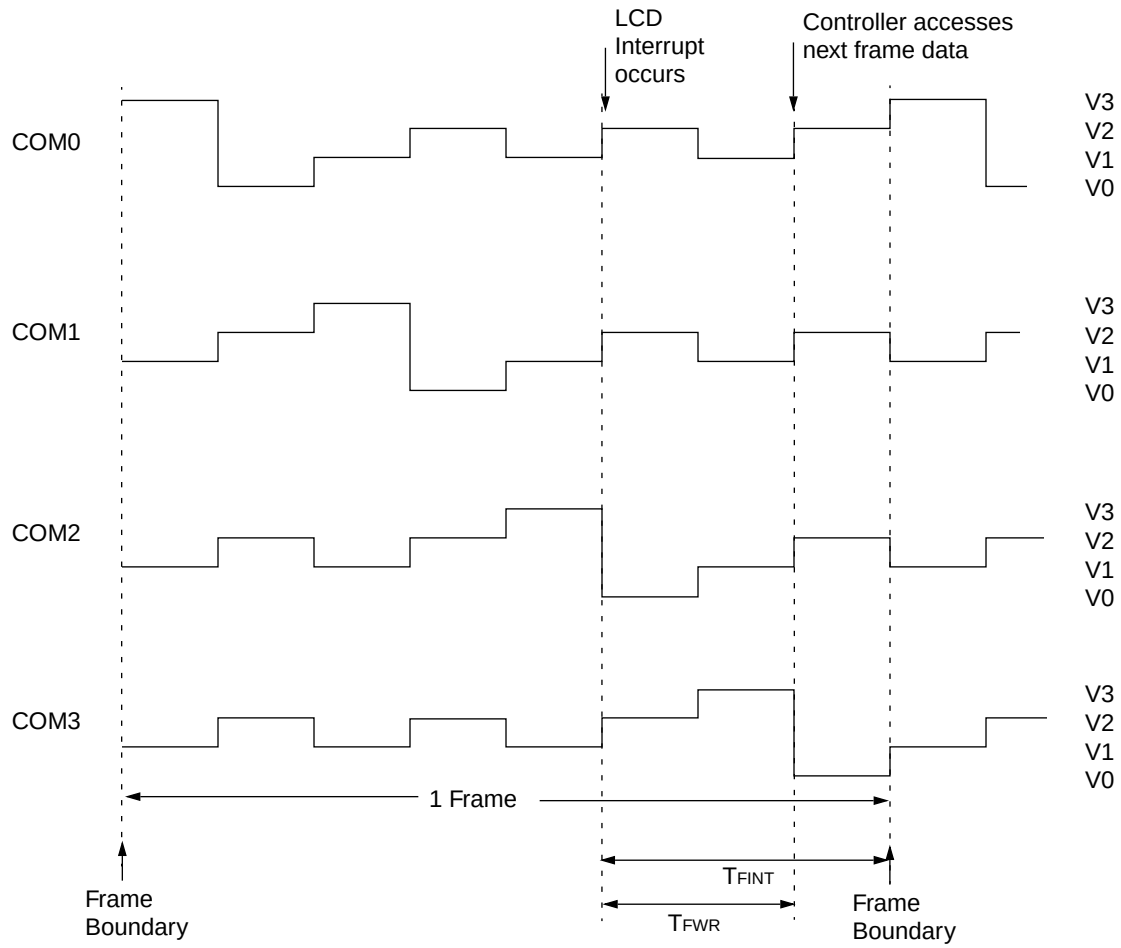

$T_{FWR} = T_{FRAME}/(LMUX1:LMUX0 + 1)$

$T_{FINT} = (T_{FWR}/2 - (2T_{CY} + 40\ ns)) \rightarrow$ min.
$(T_{FWR}/2 - (1T_{CY} + 40\ ns)) \rightarrow$ max.

13.3 Pixel Control

13.3.1 LCDD (PIXEL DATA) REGISTERS

The pixel registers contain bits which define the state of each pixel. Each bit defines one unique pixel.

Table 13-4 shows the correlation of each bit in the LCDD registers to the respective common and segment signals.

Any LCD pixel location not being used for display can be used as general purpose RAM.

FIGURE 13-10:GENERIC LCDD REGISTER LAYOUT

R/W-x	R/W-x	R/W-x	R/W-x	R/W-x	R/W-x	R/W-x	R/W-x
SEGs COMc	SEGs COMc	SEGs COMc	SEGs COMc	SEGs COMc	SEGs COMc	SEGs COMc	SEGs COMc
bit7							bit0

R =Readable bit
W =Writable bit
U =Unimplemented bit, Read as ‘0’
-n =Value at POR reset

bit 7-0: **SEGsCOMc**: Pixel Data Bit for segment s and common c
1 = Pixel on (dark)
0 = Pixel off (clear)

© 1997 Microchip Technology Inc.

13.4 Operation During Sleep

The LCD module can operate during sleep. The selection is controlled by bit SLPEN (LCDCON<6>). Setting the SLPEN bit allows the LCD module to go to sleep. Clearing the SLPEN bit allows the module to continue to operate during sleep.

If a SLEEP instruction is executed and SLPEN = '1', the LCD module will cease all functions and go into a very low current consumption mode. The module will stop operation immediately and drive the minimum LCD voltage on both segment and common lines. Figure 13-11 shows this operation. To ensure that the LCD completes the frame, the SLEEP instruction should be executed immediately after a LCD frame boundary. The LCD interrupt can be used to determine the frame boundary. See Section 13.2 for the formulas to calculate the delay.

If a SLEEP instruction is executed and SLPEN = '0', the module will continue to display the current contents of the LCDD registers. To allow the module to continue operation while in sleep, the clock source must be either the internal RC oscillator or Timer1 external oscillator. While in sleep, the LCD data cannot be changed. The LCD module current consumption will not decrease in this mode, however the overall consumption of the device will be lower due to shutdown of the core and other peripheral functions.

Note:	The internal RC oscillator or external Timer1 oscillator must be used to operate the LCD module during sleep.

FIGURE 13-11:SLEEP ENTRY/EXIT WHEN SLPEN = 1 OR CS1:CS0 = 00

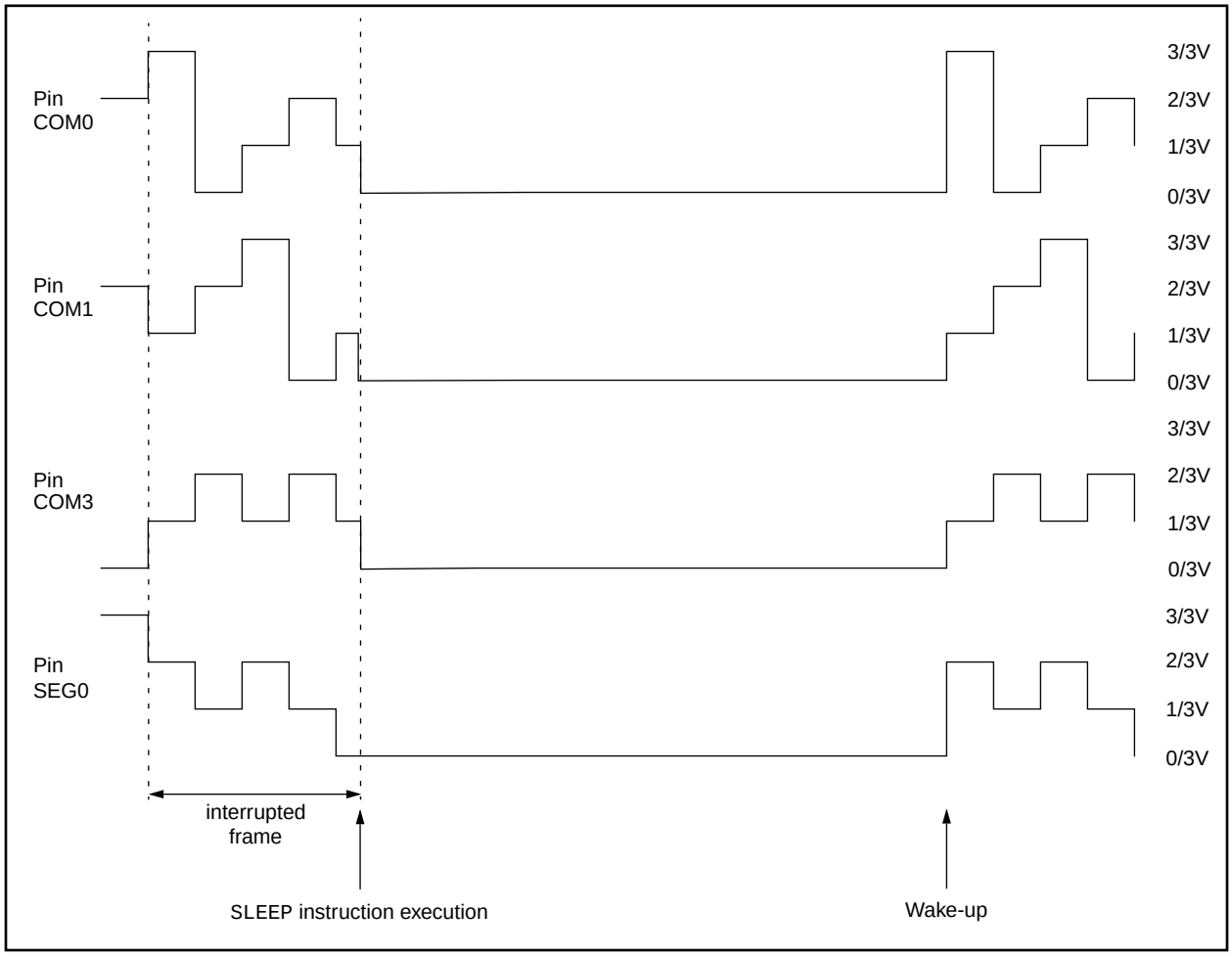

13.4.1 SEGMENT ENABLES

The LCDSE register is used to select the pin function for groups of pins. The selection allows each group of pins to operate as either LCD drivers or digital only pins. To configure the pins as a digital port, the corresponding bits in the LCDSE register must be cleared.

If the pin is a digital I/O the corresponding TRIS bit controls the data direction. Any bit set in the LCDSE register overrides any bit settings in the corresponding TRIS register.

Note 1:	On a Power-on Reset these pins are configured as LCD drivers.
Note 2:	The LMUX1:LMUX0 takes precedence over the LCDSE bit settings for pins RD7, RD6 and RD5.

EXAMPLE 13-1: STATIC MUX WITH 32 SEGMENTS

```
BCF   STATUS,RP0   ;Select Bank 2
BSF   STATUS,RP1   ;
BCF   LCDCON,LMUX1 ;Select Static MUX
BCF   LCDCON,LMUX0 ;
MOVLW 0xFF         ;Make PortD,E,F,G
MOVWF LCDSE        ;LCD pins
. . .              ;configure rest of LCD
```

EXAMPLE 13-2: 1/3 MUX WITH 13 SEGMENTS

```
BCF   STATUS,RP0   ;Select Bank 2
BSF   STATUS,RP1   ;
BSF   LCDCON,LMUX1 ;Select 1/3 MUX
BCF   LCDCON,LMUX0 ;
MOVLW 0x87         ;Make PORTD<7:0> &
MOVWF LCDSE        ;PORTE<6:0> LCD pins
. . .              ;configure rest of LCD
```

FIGURE 13-12:LCDSE REGISTER (ADDRESS 10Dh)

R/W-1	R/W-1	R/W-1	R/W-1	R/W-1	R/W-1	R/W-1	R/W-1
SE29	SE27	SE20	SE16	SE12	SE9	SE5	SE0
bit7							bit0

R =Readable bit
W =Writable bit
U =Unimplemented bit, Read as ‘0’
-n =Value at POR reset

bit 7: **SE29**: Pin function select RD7/COM1/SEG31 - RD5/COM3/SEG29
1 = pins have LCD drive function
0 = pins have digital Input function
The LMUX1:LMUX0 setting takes precedence over the LCDSE register.

bit 6: **SE27**: Pin function select RG7/SEG28 and RE7/SEG27
1 = pins have LCD drive function
0 = pins have digital Input function

bit 5: **SE20**: Pin function select RG6/SEG26 - RG0/SEG20
1 = pins have LCD drive function
0 = pins have digital Input function

bit 4: **SE16**: Pin function select RF7/SEG19 - RF4/SEG16
1 = pins have LCD drive function
0 = pins have digital Input function

bit 3: **SE12**: Pin function select RF3/SEG15 - RF0/SEG12
1 = pins have LCD drive function
0 = pins have digital Input function

bit 2: **SE9**: Pin function select RE6/SEG11 - RE4/SEG09
1 = pins have LCD drive function
0 = pins have digital Input function

bit 1: **SE5**: Pin function select RE3/SEG08 - RE0/SEG05
1 = pins have LCD drive function
0 = pins have digital Input function

bit 0: **SE0**: Pin function select RD4/SEG04 - RD0/SEG00
1 = pins have LCD drive function
0 = pins have digital I/O function

© 1997 Microchip Technology Inc.

13.5 Voltage Generation

There are two methods for LCD voltage generation, internal charge pump, or external resistor ladder.

13.5.1 CHARGE PUMP

The LCD charge pump is shown in Figure 13-13. The 1.0V - 2.3V regulator will establish a stable base voltage from the varying battery voltage. This regulator is adjustable through the range by connecting a variable external resistor from VLCDADJ to ground. The potentiometer provides contrast adjustment for the LCD. This base voltage is connected to $V_{LCD}1$ on the charge pump. The charge pump boosts $V_{LCD}1$ into $V_{LCD}2$ = 2*$V_{LCD}1$ and $V_{LCD}3$ = 3 * $V_{LCD}1$. When the charge pump is not operating, Vlcd3 will be internally tied to V_{DD}. See the Electrical Specifications section for charge pump capacitor and potentiometer values.

13.5.2 EXTERNAL R-LADDER

The LCD module can also use an external resistor ladder (R-Ladder) to generate the LCD voltages. Figure 13-13 shows external connections for static and 1/3 bias. The VGEN (LCDCON<4>) bit must be cleared to use an external R-Ladder.

FIGURE 13-13:CHARGE PUMP AND RESISTOR LADDER

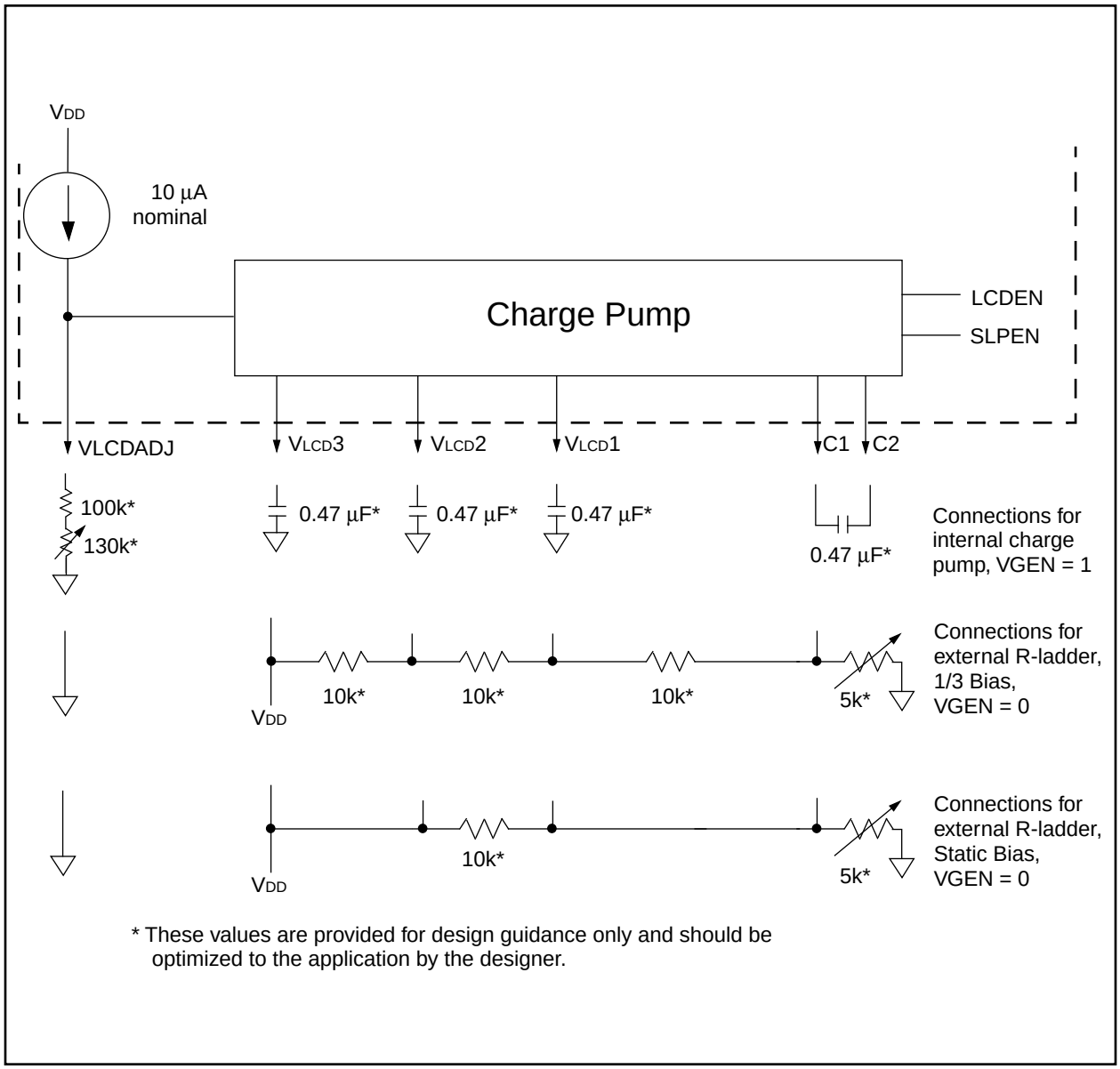

* These values are provided for design guidance only and should be optimized to the application by the designer.

13.6 Configuring the LCD Module

The following is the sequence of steps to follow to configure the LCD module.

1. Select the frame clock prescale using bits LP3:LP0 (LCDPS<3:0>).
2. Configure the appropriate pins to function as segment drivers using the LCDSE register.
3. Configure the LCD module for the following using the LCDCON register.
   - Multiplex mode and Bias, bits LMUX1:LMUX0
   - Timing source, bits CS1:CS0
   - Voltage generation, bit VGEN
   - Sleep mode, bit SLPEN
4. Write initial values to pixel data registers, LCDD00 through LCDD15.
5. Clear LCD interrupt flag, LCDIF (PIR1<7>), and if desired, enable the interrupt by setting bit LCDIE (PIE1<7>).
6. Enable the LCD module, by setting bit LCDEN (LCDCON<7>).

TABLE 13-4: SUMMARY OF REGISTERS ASSOCIATED WITH THE LCD MODULE

Address	Name	Bit 7	Bit 6	Bit 5	Bit 4	Bit 3	Bit 2	Bit 1	Bit 0	Value on Power-on Reset	Value on all other Resets
0Bh, 8Bh, 10Bh, 18Bh	INTCON	GIE	PEIE	T0IE	INTE	RBIE	T0IF	INTF	RBIF	0000 000x	0000 000u
0Ch	PIR1	LCDIF	ADIF(1)	—	—	SSPIF	CCP1IF	TMR2IF	TMR1IF	00-- 0000	00-- 0000
8Ch	PIE1	LCDIE	ADIE(1)	—	—	SSPIE	CCP1IE	TMR2IE	TMR1IE	00-- 0000	00-- 0000
10h	T1CON	—	—	T1CKPS1	T1CKPS0	T1OSCEN	$\overline{\text{T1SYNC}}$	TMR1CS	TMR1ON	--00 0000	--uu uuuu
10Dh	LCDSE	SE29	SE27	SE20	SE16	SE12	SE9	SE5	SE0	1111 1111	1111 1111
10Eh	LCDPS	—	—	—	—	LP3	LP2	LP1	LP0	---- 0000	---- 0000
10Fh	LCDCON	LCDEN	SLPEN	—	VGEN	CS1	CS0	LMUX1	LMUX0	00-0 0000	00-0 0000
110h	LCDD00	SEG07 COM0	SEG06 COM0	SEG05 COM0	SEG04 COM0	SEG03 COM0	SEG02 COM0	SEG01 COM0	SEG00 COM0	xxxx xxxx	uuuu uuuu
111h	LCDD01	SEG15 COM0	SEG14 COM0	SEG13 COM0	SEG12 COM0	SEG11 COM0	SEG10 COM0	SEG09 COM0	SEG08 COM0	xxxx xxxx	uuuu uuuu
112h	LCDD02	SEG23 COM0	SEG22 COM0	SEG21 COM0	SEG20 COM0	SEG19 COM0	SEG18 COM0	SEG17 COM0	SEG16 COM0	xxxx xxxx	uuuu uuuu
113h	LCDD03	SEG31 COM0	SEG30 COM0	SEG29 COM0	SEG28 COM0	SEG27 COM0	SEG26 COM0	SEG25 COM0	SEG24 COM0	xxxx xxxx	uuuu uuuu
114h	LCDD04	SEG07 COM1	SEG06 COM1	SEG05 COM1	SEG04 COM1	SEG03 COM1	SEG02 COM1	SEG01 COM1	SEG00 COM1	xxxx xxxx	uuuu uuuu
115h	LCDD05	SEG15 COM1	SEG14 COM1	SEG13 COM1	SEG12 COM1	SEG11 COM1	SEG10 COM1	SEG09 COM1	SEG08 COM1	xxxx xxxx	uuuu uuuu
116h	LCDD06	SEG23 COM1	SEG22 COM1	SEG21 COM1	SEG20 COM1	SEG19 COM1	SEG18 COM1	SEG17 COM1	SEG16 COM1	xxxx xxxx	uuuu uuuu
117h	LCDD07	SEG31 COM1(2)	SEG30 COM1	SEG29 COM1	SEG28 COM1	SEG27 COM1	SEG26 COM1	SEG25 COM1	SEG24 COM1	xxxx xxxx	uuuu uuuu
118h	LCDD08	SEG07 COM2	SEG06 COM2	SEG05 COM2	SEG04 COM2	SEG03 COM2	SEG02 COM2	SEG01 COM2	SEG00 COM2	xxxx xxxx	uuuu uuuu
119h	LCDD09	SEG15 COM2	SEG14 COM2	SEG13 COM2	SEG12 COM2	SEG11 COM2	SEG10 COM2	SEG09 COM2	SEG08 COM2	xxxx xxxx	uuuu uuuu
11Ah	LCDD10	SEG23 COM2	SEG22 COM2	SEG21 COM2	SEG20 COM2	SEG19 COM2	SEG18 COM2	SEG17 COM2	SEG16 COM2	xxxx xxxx	uuuu uuuu
11Bh	LCDD11	SEG31 COM2(2)	SEG30 COM2(2)	SEG29 COM2	SEG28 COM2	SEG27 COM2	SEG26 COM2	SEG25 COM2	SEG24 COM2	xxxx xxxx	uuuu uuuu
11Ch	LCDD12	SEG07 COM3	SEG06 COM3	SEG05 COM3	SEG04 COM3	SEG03 COM3	SEG02 COM3	SEG01 COM3	SEG00 COM3	xxxx xxxx	uuuu uuuu
11Dh	LCDD13	SEG15 COM3	SEG14 COM3	SEG13 COM3	SEG12 COM3	SEG11 COM3	SEG10 COM3	SEG09 COM3	SEG08 COM3	xxxx xxxx	uuuu uuuu
11Eh	LCDD14	SEG23 COM3	SEG22 COM3	SEG21 COM3	SEG20 COM3	SEG19 COM3	SEG18 COM3	SEG17 COM3	SEG16 COM3	xxxx xxxx	uuuu uuuu
11Fh	LCDD15	SEG31 COM3(2)	SEG30 COM3(2)	SEG29 COM3(2)	SEG28 COM3	SEG27 COM3	SEG26 COM3	SEG25 COM3	SEG24 COM3	xxxx xxxx	uuuu uuuu

Legend: x = unknown, u = unchanged, - = unimplemented read as '0'. Shaded cells are not used by the LCD Module.
Note 1: These bits are reserved on the PIC16C923, always maintain these bits clear.
2: These pixels do not display, but can be used as general purpose RAM.

© 1997 Microchip Technology Inc.

14.0 SPECIAL FEATURES OF THE CPU

What sets a microcontroller apart from other processors are special circuits to deal with the needs of real-time applications. The PIC16CXXX family has a host of such features intended to maximize system reliability, minimize cost through elimination of external components, provide power saving operating modes and offer code protection. These are:

- Oscillator selection
- Reset
  - Power-on Reset (POR)
  - Power-up Timer (PWRT)
  - Oscillator Start-up Timer (OST)
- Interrupts
- Watchdog Timer (WDT)
- SLEEP
- Code protection
- ID locations
- In-circuit serial programming

The PIC16CXXX has a Watchdog Timer which can be shut off only through configuration bits. It runs off its own RC oscillator for added reliability. There are two timers that offer necessary delays on power-up. One is the Oscillator Start-up Timer (OST), intended to keep the chip in reset until the crystal oscillator is stable. The other is the Power-up Timer (PWRT), which provides a fixed delay of 72 ms (nominal) on power-up only, designed to keep the part in reset while the power supply stabilizes. With these two timers on-chip, most applications need no external reset circuitry.

SLEEP mode is designed to offer a very low current power-down mode. The user can wake-up from SLEEP through external reset, Watchdog Timer Wake-up or through an interrupt. Several oscillator options are also made available to allow the part to fit the application. The RC oscillator option saves system cost while the LP crystal option saves power. A set of configuration bits are used to select various options.

14.1 Configuration Bits

The configuration bits can be programmed (read as '0') or left unprogrammed (read as '1') to select various device configurations. These bits are mapped in program memory location 2007h.

The user will note that address 2007h is beyond the user program memory space. In fact, it belongs to the special test/configuration memory space (2000h - 3FFFh), which can be accessed only during programming.

FIGURE 14-1: CONFIGURATION WORD

CP1	CP0	CP1	CP0	CP1	CP0	—	—	CP1	CP0	$\overline{\text{PWRTE}}$	WDTE	FOSC1	FOSC0
bit13													bit0

Register:	CONFIG
Address	2007h

bit 13-8 5-4: **CP1:CP0** Code protection bits [(1)]
11 = Code protection off
10 = Upper half of program memory code protected
01 = Upper 3/4 of program memory code protected
00 = All memory is code protected

bit 6: **Unimplemented**: Read as '1'

bit 3: **$\overline{\text{PWRTE}}$**: Power-up Timer Enable bit
1 = PWRT disabled
0 = PWRT enabled

bit 2: **WDTE**: Watchdog Timer Enable bit
1 = WDT enabled
0 = WDT disabled

bit 1-0: **FOSC1:FOSC0**: Oscillator Selection bits
11 = RC oscillator
10 = HS oscillator
01 = XT oscillator
00 = LP oscillator

Note 1: All of the CP1:CP0 bits have to be given the same value to enable the code protection scheme listed.

14.2 Oscillator Configurations

14.2.1 OSCILLATOR TYPES

The PIC16CXXX can be operated in four different oscillator modes. The user can program two configuration bits (FOSC1 and FOSC0) to select one of these four modes:

- LP Low Power Crystal
- XT Crystal/Resonator
- HS High Speed Crystal/Resonator
- RC Resistor/Capacitor

14.2.2 CRYSTAL OSCILLATOR/CERAMIC RESONATORS

In XT, LP or HS modes a crystal or ceramic resonator is connected to the OSC1/CLKIN and OSC2/CLKOUT pins to establish oscillation (Figure 14-2). The PIC16CXXX oscillator design requires the use of a parallel cut crystal. Use of a series cut crystal may give a frequency out of the crystal manufacturers specifications. When in XT, LP or HS modes, the device can have an external clock source to drive the OSC1/CLKIN pin (Figure 14-3).

FIGURE 14-2: CRYSTAL/CERAMIC RESONATOR OPERATION (HS, XT OR LP OSC CONFIGURATION)

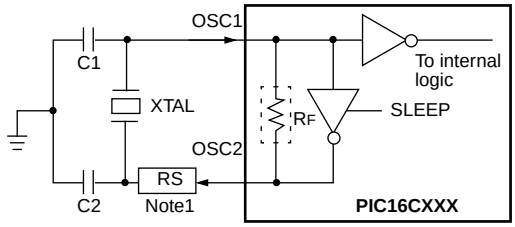

See Table 14-1 and Table 14-2 for recommended values of C1 and C2.

Note 1: A series resistor may be required for AT strip cut crystals.

FIGURE 14-3: EXTERNAL CLOCK INPUT OPERATION (HS, XT OR LP OSC CONFIGURATION)

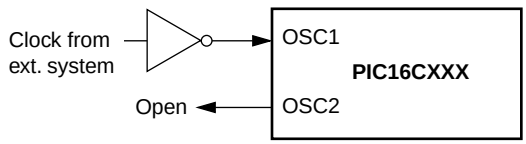

TABLE 14-1: CERAMIC RESONATORS

Ranges Tested:			
Mode	**Freq**	**OSC1**	**OSC2**
XT	455 kHz 2.0 MHz 4.0 MHz	68 - 100 pF 15 - 68 pF 15 - 68 pF	68 - 100 pF 15 - 68 pF 15 - 68 pF
HS	8.0 MHz	10 - 68 pF	10 - 68 pF
These values are for design guidance only. See notes at bottom of page.			
Resonators Used:			
455 kHz	Panasonic EFO-A455K04B	± 0.3%	
2.0 MHz	Murata Erie CSA2.00MG	± 0.5%	
4.0 MHz	Murata Erie CSA4.00MG	± 0.5%	
8.0 MHz	Murata Erie CSA8.00MT	± 0.5%	
All resonators used did not have built-in capacitors.			

TABLE 14-2: CAPACITOR SELECTION FOR CRYSTAL OSCILLATOR

Osc Type	Crystal Freq	Cap. Range C1	Cap. Range C2
LP	32 kHz	33 pF	33 pF
	200 kHz	15 pF	15 pF
XT	200 kHz	47-68 pF	47-68 pF
	1 MHz	15 pF	15 pF
	4 MHz	15 pF	15 pF
HS	4 MHz	15 pF	15 pF
	8 MHz	15-33 pF	15-33 pF
These values are for design guidance only. See notes at bottom of page.			
Crystals Used			
32 kHz	Epson C-001R32.768K-A	± 20 PPM	
200 kHz	STD XTL 200.000KHz	± 20 PPM	
1 MHz	ECS ECS-10-13-1	± 50 PPM	
4 MHz	ECS ECS-40-20-1	± 50 PPM	
8 MHz	EPSON CA-301 8.000M-C	± 30 PPM	

Note 1: Recommended values of C1 and C2 are identical to the ranges tested (Table 14-1).
2: Higher capacitance increases the stability of oscillator but also increases the start-up time.
3: Since each resonator/crystal has its own characteristics, the user should consult the resonator/crystal manufacturer for appropriate values of external components.
4: Rs may be required in HS mode as well as XT mode to avoid overdriving crystals with low drive level specification.

© 1997 Microchip Technology Inc.

14.2.3 EXTERNAL CRYSTAL OSCILLATOR CIRCUIT

Either a prepackaged oscillator can be used or a simple oscillator circuit with TTL gates can be built. Prepackaged oscillators provide a wide operating range and better stability. A well-designed crystal oscillator will provide good performance with TTL gates. Two types of crystal oscillator circuits can be used; one with series resonance, or one with parallel resonance.

Figure 14-4 shows implementation of a parallel resonant oscillator circuit. The circuit is designed to use the fundamental frequency of the crystal. The 74AS04 inverter performs the 180-degree phase shift that a parallel oscillator requires. The 4.7 kΩ resistor provides the negative feedback for stability. The 10 kΩ potentiometer biases the 74AS04 in the linear region. This could be used for external oscillator designs.

FIGURE 14-4: EXTERNAL PARALLEL RESONANT CRYSTAL OSCILLATOR CIRCUIT

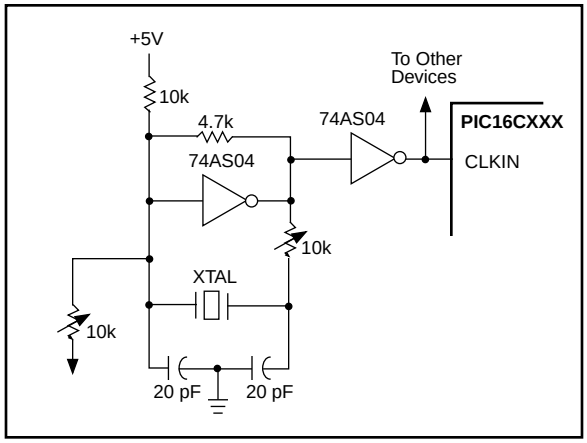

Figure 14-5 shows a series resonant oscillator circuit. This circuit is also designed to use the fundamental frequency of the crystal. The inverter performs a 180-degree phase shift in a series resonant oscillator circuit. The 330 kΩ resistors provide the negative feedback to bias the inverters in their linear region.

FIGURE 14-5: EXTERNAL SERIES RESONANT CRYSTAL OSCILLATOR CIRCUIT

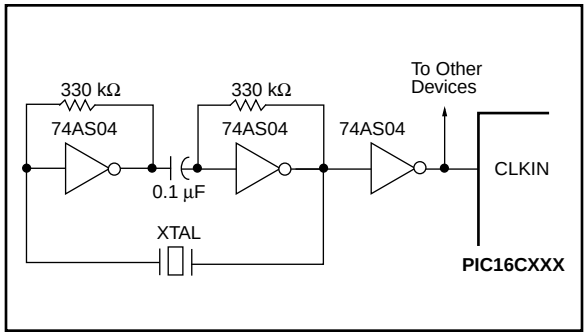

14.2.4 RC OSCILLATOR

For timing insensitive applications the "RC" device option offers additional cost savings. The RC oscillator frequency is a function of the supply voltage, the resistor (REXT) and capacitor (CEXT) values, and the operating temperature. In addition to this, the oscillator frequency will vary from unit to unit due to normal process parameter variation. Furthermore, the difference in lead frame capacitance between package types will also affect the oscillation frequency, especially for low CEXT values. The user also needs to take into account variation due to tolerance of external R and C components used. Figure 14-6 shows how the R/C combination is connected to the PIC16CXXX. For REXT values below 2.2 kΩ, the oscillator operation may become unstable, or stop completely. For very high REXT values (e.g. 1 MΩ), the oscillator becomes sensitive to noise, humidity and leakage. Thus, we recommend to keep Rext between 3 kΩ and 100 kΩ.

Although the oscillator will operate with no external capacitor (CEXT = 0 pF), we recommend using values above 20 pF for noise and stability reasons. With no or small external capacitance, the oscillation frequency can vary dramatically due to changes in external capacitances, such as PCB trace capacitance or package lead frame capacitance.

See characterization data for desired device for RC frequency variation from part to part due to normal process variation. The variation is larger for larger R (since leakage current variation will affect RC frequency more for large R) and for smaller C (since variation of input capacitance will affect RC frequency more).

See characterization data for desired device for variation of oscillator frequency due to VDD for given REXT/CEXT values as well as frequency variation due to operating temperature for given R, C, and VDD values.

The oscillator frequency, divided by 4, is available on the OSC2/CLKOUT pin, and can be used for test purposes or to synchronize other logic (see Figure 3-3 for waveform).

FIGURE 14-6: RC OSCILLATOR MODE

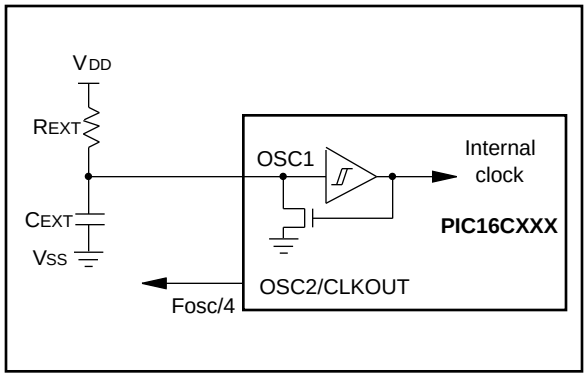

14.3 Reset

The PIC16CXX differentiates between various kinds of reset:

- Power-on Reset (POR)
- $\overline{\text{MCLR}}$ Reset during normal operation
- $\overline{\text{MCLR}}$ Reset during SLEEP
- WDT Reset (normal operation)

Some registers are not affected in any reset condition; their status is unknown on POR and unchanged in any other reset. Most other registers are reset to a "reset state" on Power-on Reset (POR), on the $\overline{\text{MCLR}}$ and WDT Reset, and on $\overline{\text{MCLR}}$ Reset during SLEEP. They are not affected by a WDT Wake-up, which is viewed as the resumption of normal operation. The $\overline{\text{TO}}$ and $\overline{\text{PD}}$ bits are set or cleared differently in different reset situations as indicated in Table 14-4. These bits are used in software to determine the nature of the reset. See Table 14-6 for a full description of reset states of all registers.

A simplified block diagram of the on-chip reset circuit is shown in Figure 14-7.

The devices all have a $\overline{\text{MCLR}}$ noise filter in the $\overline{\text{MCLR}}$ reset path. The filter will detect and ignore small pulses.

It should be noted that a WDT Reset does not drive $\overline{\text{MCLR}}$ pin low.

FIGURE 14-7: SIMPLIFIED BLOCK DIAGRAM OF ON-CHIP RESET CIRCUIT

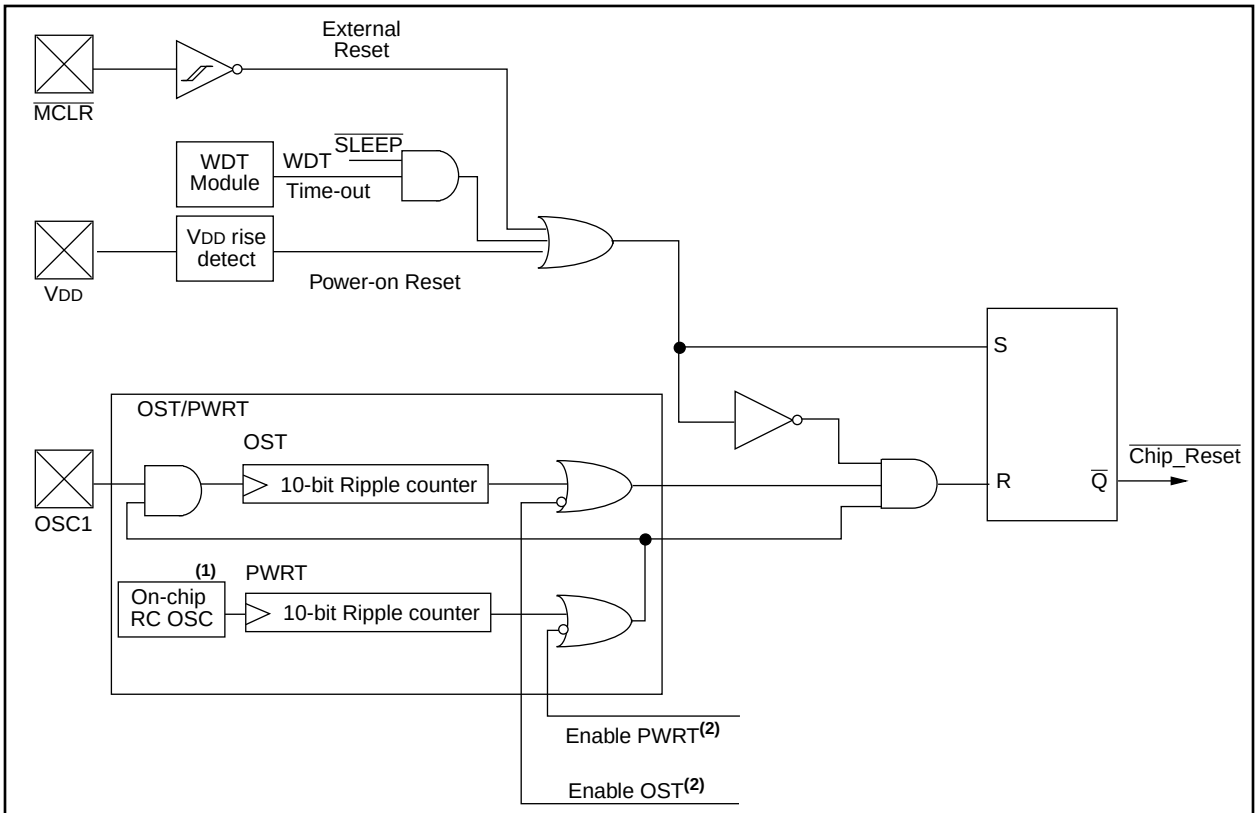

Note 1: This is a separate oscillator from the RC oscillator of the CLKIN pin.
2: See Table 14-3 for time-out situations.

© 1997 Microchip Technology Inc.

14.4 Power-on Reset (POR), Power-up Timer (PWRT) and Oscillator Start-up Timer (OST)

14.4.1 POWER-ON RESET (POR)

A Power-on Reset pulse is generated on-chip when VDD rise is detected (in the range of 1.5V - 2.1V). To take advantage of the POR, just tie the $\overline{\text{MCLR}}$ pin directly (or through a resistor) to VDD. This will eliminate external RC components usually needed to create a Power-on Reset. A maximum rise time for VDD is specified. See Electrical Specifications for details.

When the device starts normal operation (exits the reset condition), device operating parameters (voltage, frequency, temperature, ...) must be met to ensure operation. If these conditions are not met, the device must be held in reset until the operating conditions are met.

For additional information, refer to Application Note AN607, "*Power-up Trouble Shooting*."

14.4.2 POWER-UP TIMER (PWRT)

The Power-up Timer provides a fixed 72 ms nominal time-out on power-up only, from the POR. The Power-up Timer operates on an internal RC oscillator. The chip is kept in reset as long as the PWRT is active. The PWRT's time delay allows VDD to rise to an acceptable level. A configuration bit is provided to enable/disable the PWRT.

The power-up time delay will vary from chip to chip due to VDD, temperature, and process variation. See DC parameters for details.

14.4.3 OSCILLATOR START-UP TIMER (OST)

The Oscillator Start-up Timer (OST) provides 1024 oscillator cycle (from OSC1 input) delay after the PWRT delay is over. This ensures that the crystal oscillator or resonator has started and stabilized.

The OST time-out is invoked only for XT, LP and HS modes and only on Power-on Reset or wake-up from SLEEP.

14.4.4 TIME-OUT SEQUENCE

On power-up the time-out sequence is as follows: First PWRT time-out is invoked after the POR time delay has expired. Then OST is activated. The total time-out will vary based on oscillator configuration and the status of the PWRT. For example, in RC mode with the PWRT disabled, there will be no time-out at all. Figure 14-8, Figure 14-9, and Figure 14-10 depict time-out sequences on power-up.

Since the time-outs occur from the POR pulse, if $\overline{\text{MCLR}}$ is kept low long enough, the time-outs will expire. Then bringing $\overline{\text{MCLR}}$ high will begin execution immediately (Figure 14-9). This is useful for testing purposes or to synchronize more than one PIC16CXXX device operating in parallel.

Table 14-5 shows the reset conditions for some special function registers, while Table 14-6 shows the reset conditions for all the registers.

14.4.5 POWER CONTROL/STATUS REGISTER (PCON)

Bit1 is Power-on Reset Status bit $\overline{\text{POR}}$. It is cleared on a Power-on Reset and unaffected otherwise. The user must set this bit following a Power-on Reset.

TABLE 14-3: TIME-OUT IN VARIOUS SITUATIONS

Oscillator Configuration	Power-up		Wake-up from SLEEP
	$\overline{\text{PWRTE}}$ = 1	$\overline{\text{PWRTE}}$ = 0	
XT, HS, LP	1024TOSC	72 ms + 1024TOSC	1024 TOSC
RC	—	72 ms	—

TABLE 14-4: STATUS BITS AND THEIR SIGNIFICANCE

$\overline{POR}$	$\overline{TO}$	$\overline{PD}$	
0	1	1	Power-on Reset
0	0	x	Illegal, $\overline{TO}$ is set on $\overline{POR}$
0	x	0	Illegal, $\overline{PD}$ is set on $\overline{POR}$
1	0	1	WDT Reset
1	0	0	WDT Wake-up
1	u	u	$\overline{MCLR}$ Reset during normal operation
1	1	0	$\overline{MCLR}$ Reset during SLEEP or interrupt wake-up from SLEEP

Legend: u = unchanged, x = unknown

TABLE 14-5: RESET CONDITION FOR SPECIAL REGISTERS

Condition	Program Counter	STATUS Register	PCON Register
Power-on Reset	000h	0001 1xxx	---- --0-
$\overline{MCLR}$ Reset during normal operation	000h	000u uuuu	---- --u-
$\overline{MCLR}$ Reset during SLEEP	000h	0001 0uuu	---- --u-
WDT Reset	000h	0000 1uuu	---- --u-
WDT Wake-up	PC + 1	uuu0 0uuu	---- --u-
Interrupt wake-up from SLEEP	PC + 1(1)	uuu1 0uuu	---- --u-

Legend: u = unchanged, x = unknown, - = unimplemented bit read as '0'.
Note 1: When the wake-up is due to an interrupt and the GIE bit is set, the PC is loaded with the interrupt vector (0004h).

TABLE 14-6: INITIALIZATION CONDITIONS FOR ALL REGISTERS

Register	Applicable Devices		Power-on Reset	$\overline{MCLR}$ Resets WDT Reset	Wake-up via WDT or Interrupt
W	923	924	xxxx xxxx	uuuu uuuu	uuuu uuuu
INDF	923	924	N/A	N/A	N/A
TMR0	923	924	xxxx xxxx	uuuu uuuu	uuuu uuuu
PCL	923	924	0000h	0000h	PC + 1(2)
STATUS	923	924	0001 1xxx	000q quuu(3)	uuuq quuu(3)
FSR	923	924	xxxx xxxx	uuuu uuuu	uuuu uuuu
PORTA	923	924	--xx xxxx	--uu uuuu	--uu uuuu
PORTA	923	924	--0x 0000(5)	--0u 0000(5)	--uu uuuu
PORTB	923	924	xxxx xxxx	uuuu uuuu	uuuu uuuu
PORTC	923	924	--xx xxxx	--uu uuuu	--uu uuuu

Legend: u = unchanged, x = unknown, - = unimplemented bit, read as '0', q = value depends on condition
Note 1: One or more bits in INTCON and/or PIR1 will be affected (to cause wake-up).
2: When the wake-up is due to an interrupt and the GIE bit is set, the PC is loaded with the interrupt vector (0004h).
3: See Table 14-5 for reset value for specific condition.
4: Bits PIE1<6> and PIR1<6> are reserved on the PIC16C923, always maintain these bits clear.
5: PORTA values when read.

© 1997 Microchip Technology Inc.

TABLE 14-6: INITIALIZATION CONDITIONS FOR ALL REGISTERS (Cont.'d)

Register	Applicable Devices		Power-on Reset	$\overline{\text{MCLR}}$ Resets WDT Reset	Wake-up via WDT or Interrupt
PORTD	923	924	0000 0000	0000 0000	uuuu uuuu
PORTE	923	924	0000 0000	0000 0000	uuuu uuuu
PCLATH	923	924	---0 0000	---0 0000	---u uuuu
INTCON	923	924	0000 000x	0000 000u	uuuu uuuu(1)
PIR1(4)	923	924	00-- 0000	00-- 0000	uu-- uuuu(1)
TMR1L	923	924	xxxx xxxx	uuuu uuuu	uuuu uuuu
TMR1H	923	924	xxxx xxxx	uuuu uuuu	uuuu uuuu
T1CON	923	924	--00 0000	--uu uuuu	--uu uuuu
TMR2	923	924	0000 0000	0000 0000	uuuu uuuu
T2CON	923	924	-000 0000	-000 0000	-uuu uuuu
SSPBUF	923	924	xxxx xxxx	uuuu uuuu	uuuu uuuu
SSPCON	923	924	0000 0000	0000 0000	uuuu uuuu
CCPR1L	923	924	xxxx xxxx	uuuu uuuu	uuuu uuuu
CCPR1H	923	924	xxxx xxxx	uuuu uuuu	uuuu uuuu
CCP1CON	923	924	--00 0000	--00 0000	--uu uuuu
ADRES	923	924	xxxx xxxx	uuuu uuuu	uuuu uuuu
ADCON0	923	924	0000 00-0	0000 00-0	uuuu uu-u
OPTION	923	924	1111 1111	1111 1111	uuuu uuuu
TRISA	923	924	--11 1111	--11 1111	--uu uuuu
TRISB	923	924	1111 1111	1111 1111	uuuu uuuu
TRISC	923	924	--11 1111	--11 1111	--uu uuuu
TRISD	923	924	1111 1111	1111 1111	uuuu uuuu
TRISE	923	924	1111 1111	1111 1111	uuuu uuuu
PIE1(4)	923	924	00-- 0000	00-- 0000	uu-- uuuu
PCON	923	924	---- --0-	---- --u-	---- --u-
PR2	923	924	1111 1111	1111 1111	1111 1111
SSPADD	923	924	0000 0000	0000 0000	uuuu uuuu
SSPSTAT	923	924	0000 0000	0000 0000	uuuu uuuu
ADCON1	923	924	---- -000	---- -000	---- -uuu
PORTF	923	924	0000 0000	0000 0000	uuuu uuuu
PORTG	923	924	0000 0000	0000 0000	uuuu uuuu

Legend: u = unchanged, x = unknown, - = unimplemented bit, read as '0', q = value depends on condition

Note 1: One or more bits in INTCON and/or PIR1 will be affected (to cause wake-up).
2: When the wake-up is due to an interrupt and the GIE bit is set, the PC is loaded with the interrupt vector (0004h).
3: See Table 14-5 for reset value for specific condition.
4: Bits PIE1<6> and PIR1<6> are reserved on the PIC16C923, always maintain these bits clear.
5: PORTA values when read.

TABLE 14-6: INITIALIZATION CONDITIONS FOR ALL REGISTERS (Cont.'d)

Register	Applicable Devices		Power-on Reset	$\overline{\text{MCLR}}$ Resets WDT Reset	Wake-up via WDT or Interrupt
LCDSE	923	924	1111 1111	1111 1111	uuuu uuuu
LCDPS	923	924	---- 0000	---- 0000	---- uuuu
LCDCON	923	924	00-0 0000	00-0 0000	uu-u uuuu
LCDD00 to LCDD15	923	924	xxxx xxxx	uuuu uuuu	uuuu uuuu
TRISF	923	924	1111 1111	1111 1111	uuuu uuuu
TRISG	923	924	1111 1111	1111 1111	uuuu uuuu

Legend: u = unchanged, x = unknown, - = unimplemented bit, read as '0', q = value depends on condition

Note 1: One or more bits in INTCON and/or PIR1 will be affected (to cause wake-up).

2: When the wake-up is due to an interrupt and the GIE bit is set, the PC is loaded with the interrupt vector (0004h).

3: See Table 14-5 for reset value for specific condition.

4: Bits PIE1<6> and PIR1<6> are reserved on the PIC16C923, always maintain these bits clear.

5: PORTA values when read.

© 1997 Microchip Technology Inc.

FIGURE 14-8: TIME-OUT SEQUENCE ON POWER-UP ($\overline{MCLR}$ NOT TIED TO V_{DD}): CASE 1

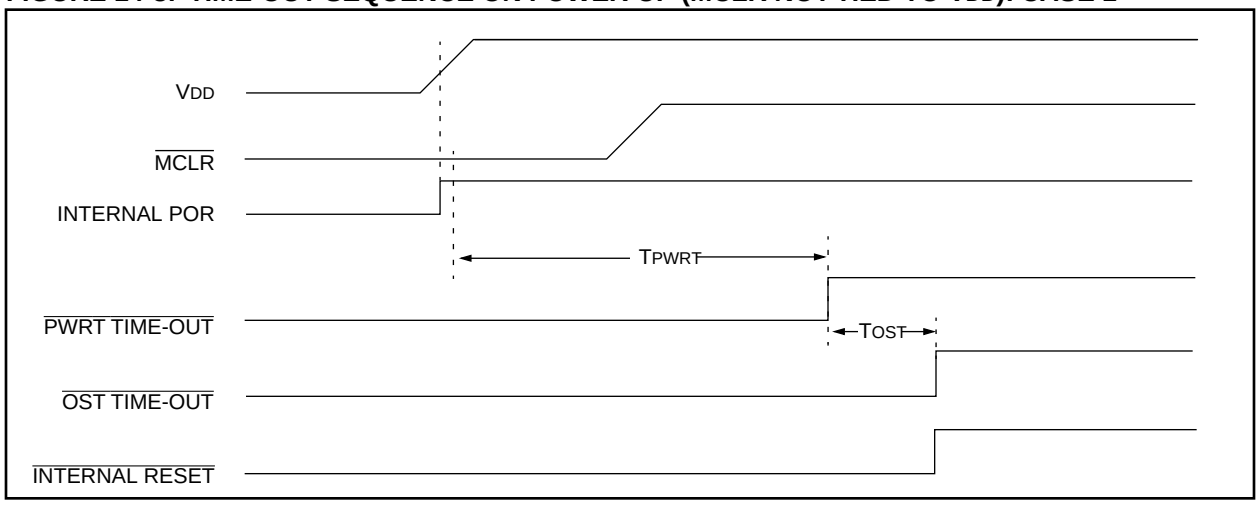

FIGURE 14-9: TIME-OUT SEQUENCE ON POWER-UP ($\overline{MCLR}$ NOT TIED TO V_{DD}): CASE 2

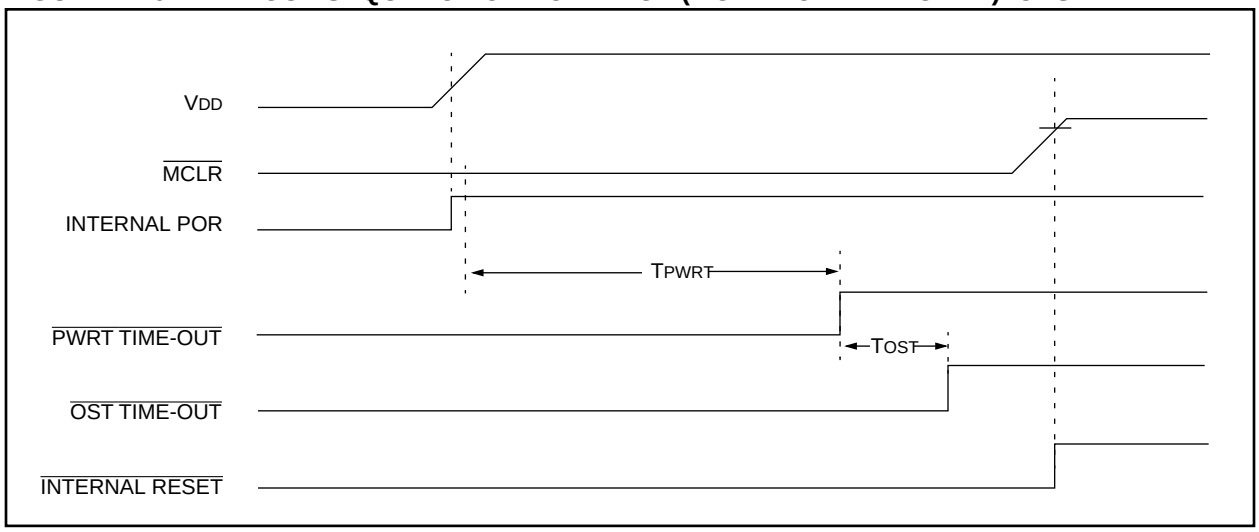

FIGURE 14-10:TIME-OUT SEQUENCE ON POWER-UP ($\overline{MCLR}$ TIED TO V_{DD})

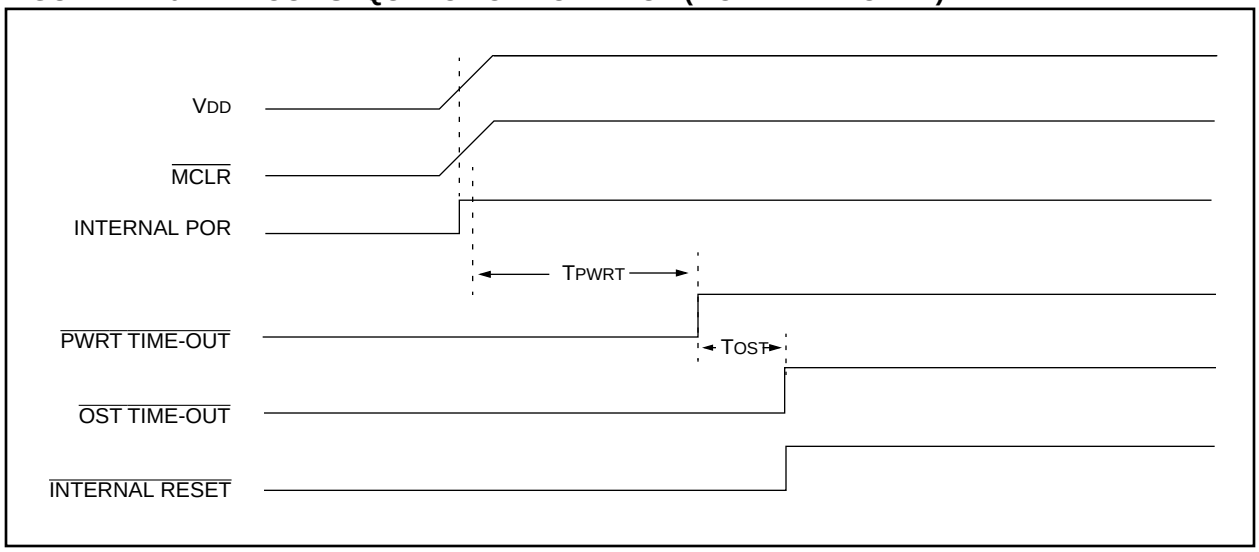

FIGURE 14-11: EXTERNAL POWER-ON RESET CIRCUIT (FOR SLOW VDD POWER-UP)

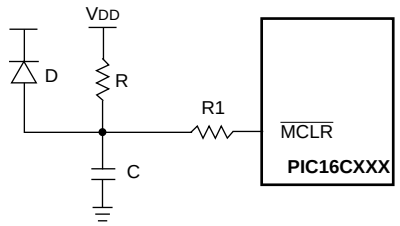

Note 1: External Power-on Reset circuit is required only if VDD power-up slope is too slow. The diode D helps discharge the capacitor quickly when VDD powers down.

2: R < 40 kΩ is recommended to make sure that voltage drop across R does not violate the device's electrical specification.

3: R1 = 100Ω to 1 kΩ will limit any current flowing into $\overline{\text{MCLR}}$ from external capacitor C in the event of $\overline{\text{MCLR}}$/VPP pin breakdown due to Electrostatic Discharge (ESD) or Electrical Overstress (EOS).

FIGURE 14-12: EXTERNAL BROWN-OUT PROTECTION CIRCUIT 1

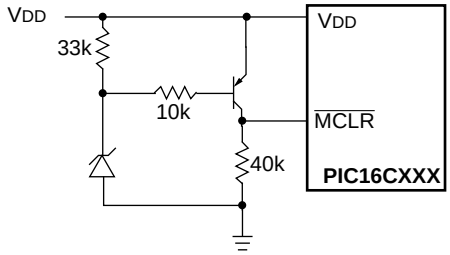

Note 1: This circuit will activate reset when VDD goes below (Vz + 0.7V) where Vz = Zener voltage.

2: Resistors should be adjusted for the characteristics of the transistors.

FIGURE 14-13: EXTERNAL BROWN-OUT PROTECTION CIRCUIT 2

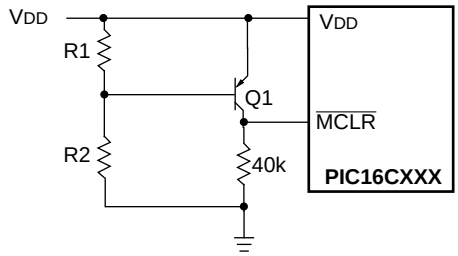

Note 1: This brown-out circuit is less expensive, albeit less accurate. Transistor Q1 turns off when VDD is below a certain level such that:

$$V_{DD} \cdot \frac{R1}{R1 + R2} = 0.7V$$

2: Resistors should be adjusted for the characteristics of the transistors.

© 1997 Microchip Technology Inc.

14.5 Interrupts

The PIC16C9XX family has up to 9 sources of interrupt:

Interrupt Sources	Applicable Devices	
External interrupt RB0/INT	923	924
TMR0 overflow interrupt	923	924
PORTB change interrupts (pins RB7:RB4)	923	924
A/D Interrupt	923	924
TMR1 overflow interrupt	923	924
TMR2 matches period interrupt	923	924
CCP1 interrupt	923	924
Synchronous serial port interrupt	923	924
LCD Module interrupt	923	924

The interrupt control register (INTCON) records individual interrupt requests in flag bits. It also has individual and global interrupt enable bits.

Note:	Individual interrupt flag bits are set regardless of the status of their corresponding mask bit or the GIE bit.

A global interrupt enable bit, GIE (INTCON<7>) enables (if set) all un-masked interrupts or disables (if cleared) all interrupts. When bit GIE is enabled, and an interrupt's flag bit and mask bit are set, the interrupt will vector immediately. Individual interrupts can be disabled through their corresponding enable bits in various registers. Individual interrupt bits are set regardless of the status of the GIE bit. The GIE bit is cleared on reset.

The "return from interrupt" instruction, `RETFIE`, exits the interrupt routine as well as sets the GIE bit, which re-enables interrupts.

The RB0/INT pin interrupt, the RB port change interrupt and the TMR0 overflow interrupt flags are contained in the INTCON register.

The peripheral interrupt flags are contained in the special function register PIR1. The corresponding interrupt enable bits are contained in special function register PIE1, and the peripheral interrupt enable bit is contained in special function register INTCON.

When an interrupt is responded to, the GIE bit is cleared to disable any further interrupts, the return address is pushed onto the stack and the PC is loaded with 0004h. Once in the interrupt service routine the source(s) of the interrupt can be determined by polling the interrupt flag bits. The interrupt flag bit(s) must be cleared in software before re-enabling interrupts to avoid recursive interrupts.

For external interrupt events, such as the RB0/INT pin or RB Port change interrupt, the interrupt latency will be three or four instruction cycles. The exact latency depends when the interrupt event occurs (Figure 14-15). The latency is the same for one or two cycle instructions. Individual interrupt flag bits are set regardless of the status of their corresponding mask bit or the GIE bit.

© 1997 Microchip Technology Inc.

FIGURE 14-14:INTERRUPT LOGIC

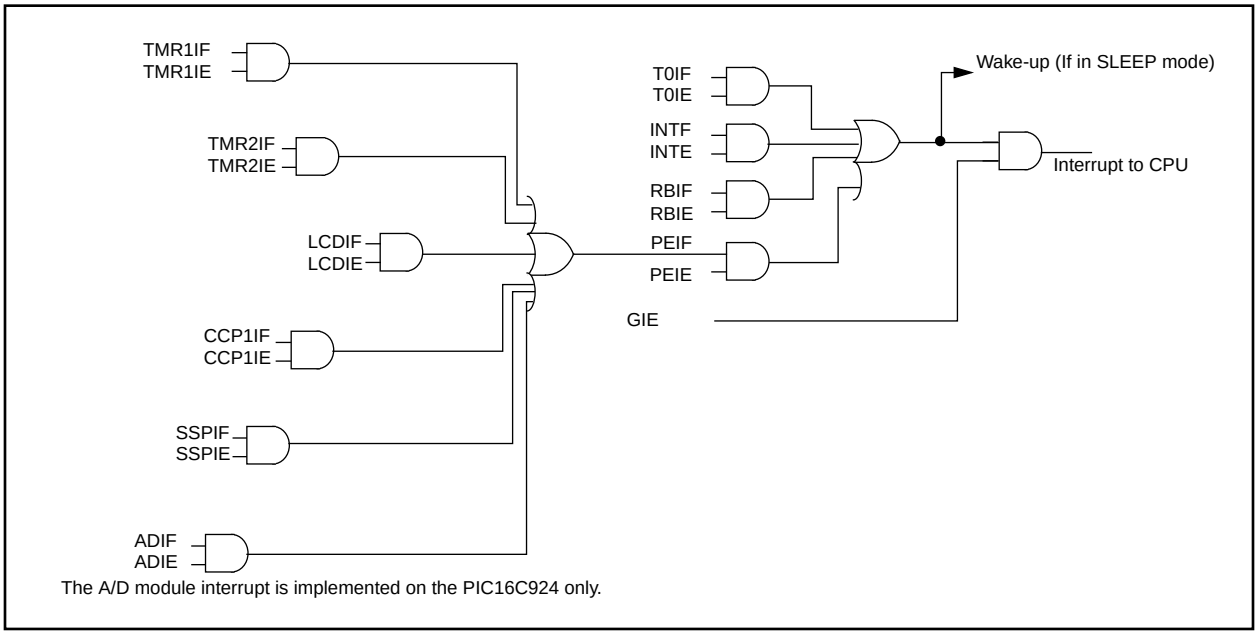

FIGURE 14-15:INT PIN INTERRUPT TIMING

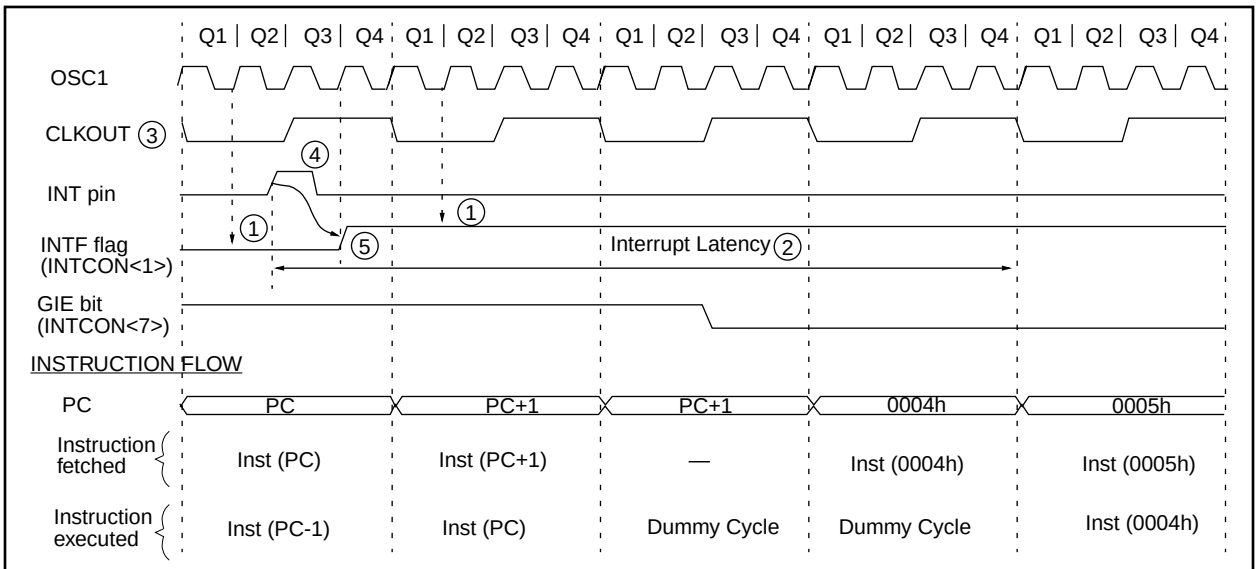

Note 1: INTF flag is sampled here (every Q1).
2: Interrupt latency = 3-4 T_{CY} where T_{CY} = instruction cycle time.
Latency is the same whether Inst (PC) is a single cycle or a 2-cycle instruction.
3: CLKOUT is available only in RC oscillator mode.
4: For minimum width of INT pulse, refer to AC specs.
5: INTF can be set anytime during the Q4-Q1 cycles.

© 1997 Microchip Technology Inc.

14.5.1 INT INTERRUPT

External interrupt on RB0/INT pin is edge triggered: either rising if bit INTEDG (OPTION<6>) is set, or falling, if the INTEDG bit is clear. When a valid edge appears on the RB0/INT pin, flag bit INTF (INTCON<1>) is set. This interrupt can be disabled by clearing enable bit INTE (INTCON<4>). Flag bit INTF must be cleared in software in the interrupt service routine before re-enabling this interrupt. The INT interrupt can wake-up the processor from SLEEP, if bit INTE was set prior to going into SLEEP. The status of global interrupt enable bit GIE decides whether or not the processor branches to the interrupt vector following wake-up. See Section 14.8 for details on SLEEP mode.

14.5.2 TMR0 INTERRUPT

An overflow (FFh → 00h) in the TMR0 register will set flag bit T0IF (INTCON<2>). The interrupt can be enabled/disabled by setting/clearing enable bit T0IE (INTCON<5>). (Section 7.0)

14.5.3 PORTB INTCON CHANGE

An input change on PORTB<7:4> sets flag bit RBIF (INTCON<0>). The interrupt can be enabled/disabled by setting/clearing enable bit RBIE (INTCON<4>). (Section 5.2)

14.6 Context Saving During Interrupts

During an interrupt, only the return PC value is saved on the stack. Typically, users may wish to save key registers during an interrupt i.e., W register and STATUS register. This will have to be implemented in software.

Example 14-1 stores and restores the STATUS, W, and PCLATH registers. The register, W_TEMP, must be defined in each bank and must be defined at the same offset from the bank base address (i.e., if W_TEMP is defined at 0x20 in bank 0, it must also be defined at 0xA0 in bank 1).

The example:

a) Stores the W register.
b) Stores the STATUS register in bank 0.
c) Stores the PCLATH register.
d) Executes the ISR code.
e) Restores the STATUS register (and bank select bit).
f) Restores the W and PCLATH registers.

EXAMPLE 14-1: SAVING STATUS, W, AND PCLATH REGISTERS IN RAM

```
MOVWF    W_TEMP          ;Copy W to TEMP register, could be bank one or zero
SWAPF    STATUS,W        ;Swap status to be saved into W
CLRF     STATUS          ;bank 0, regardless of current bank, Clears IRP,RP1,RP0
MOVWF    STATUS_TEMP     ;Save status to bank zero STATUS_TEMP register
MOVF     PCLATH, W       ;Only required if using pages 1, 2 and/or 3
MOVWF    PCLATH_TEMP     ;Save PCLATH into W
CLRF     PCLATH          ;Page zero, regardless of current page
BCF      STATUS, IRP     ;Return to Bank 0
MOVF     FSR, W          ;Copy FSR to W
MOVWF    FSR_TEMP        ;Copy FSR from W to FSR_TEMP
:
:(ISR)
:
MOVF     PCLATH_TEMP, W  ;Restore PCLATH
MOVWF    PCLATH          ;Move W into PCLATH
SWAPF    STATUS_TEMP,W   ;Swap STATUS_TEMP register into W
                         ;(sets bank to original state)
MOVWF    STATUS          ;Move W into STATUS register
SWAPF    W_TEMP,F        ;Swap W_TEMP
SWAPF    W_TEMP,W        ;Swap W_TEMP into W
```

14.7 Watchdog Timer (WDT)

The Watchdog Timer is as a free running on-chip RC oscillator which does not require any external components. This RC oscillator is separate from the RC oscillator of the OSC1/CLKIN pin. That means that the WDT will run, even if the clock on the OSC1/CLKIN and OSC2/CLKOUT pins of the device has been stopped, for example, by execution of a SLEEP instruction. During normal operation, a WDT time-out generates a device RESET (Watchdog Timer Reset). If the device is in SLEEP mode, a WDT time-out causes the device to wake-up and continue with normal operation (Watchdog Timer Wake-up). The WDT can be permanently disabled by clearing configuration bit WDTE (Section 14.1).

14.7.1 WDT PERIOD

The WDT has a nominal time-out period of 18 ms, (with no prescaler). The time-out periods vary with temperature, VDD and process variations from part to part (see DC specs). If longer time-out periods are desired, a prescaler with a division ratio of up to 1:128 can be assigned to the WDT under software control by writing to the OPTION register. Thus, time-out periods up to 2.3 seconds can be realized.

The CLRWDT and SLEEP instructions clear the WDT and the postscaler, if assigned to the WDT, and prevent it from timing out and generating a device RESET condition.

The $\overline{TO}$ bit in the STATUS register will be cleared upon a Watchdog Timer time-out.

14.7.2 WDT PROGRAMMING CONSIDERATIONS

It should also be taken into account that under worst case conditions (VDD = Min., Temperature = Max., and max. WDT prescaler) it may take several seconds before a WDT time-out occurs.

Note:	When a CLRWDT instruction is executed and the prescaler is assigned to the WDT, the prescaler count will be cleared, but the prescaler assignment is not changed.

FIGURE 14-16: WATCHDOG TIMER BLOCK DIAGRAM

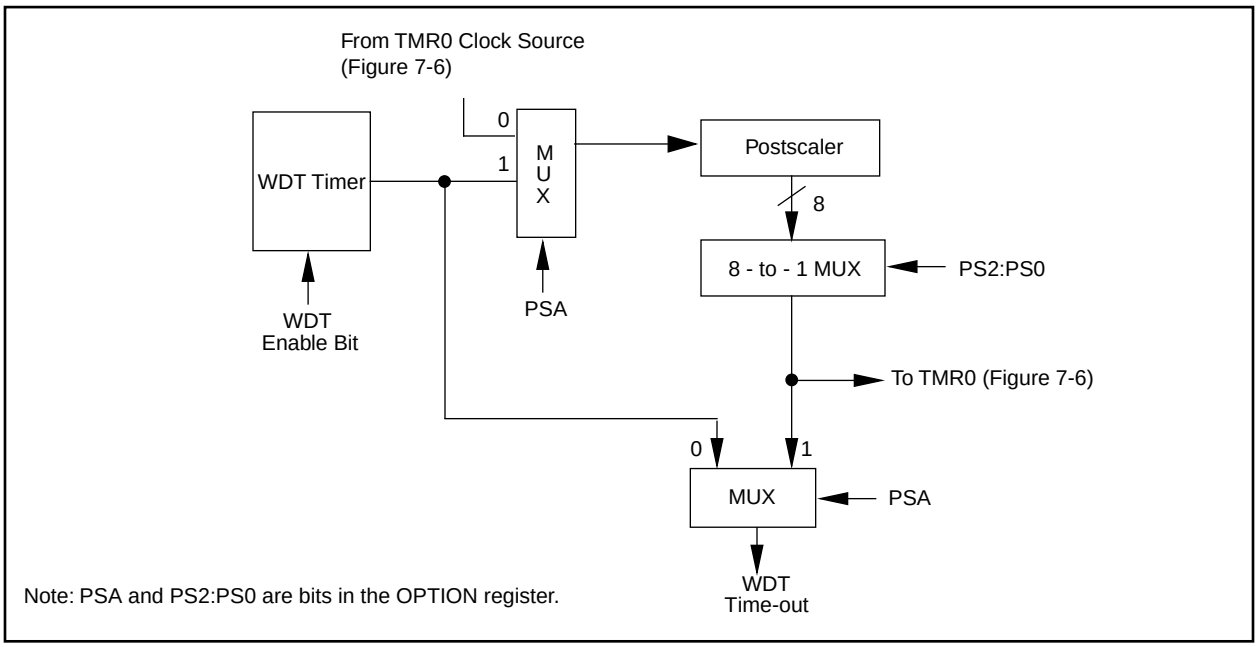

FIGURE 14-17: SUMMARY OF WATCHDOG TIMER REGISTERS

Address	Name	Bit 7	Bit 6	Bit 5	Bit 4	Bit 3	Bit 2	Bit 1	Bit 0
2007h	Config. bits	**(1)**	**(1)**	CP1	CP0	$\overline{PWRTE}$ **(1)**	WDTE	FOSC1	FOSC0
81h, 181h	OPTION	$\overline{RBPU}$	INTEDG	T0CS	T0SE	PSA	PS2	PS1	PS0

Legend: Shaded cells are not used by the Watchdog Timer.
Note 1: See Figure 14-1 for operation of these bits.

© 1997 Microchip Technology Inc.

14.8 Power-down Mode (SLEEP)

Power-down mode is entered by executing a SLEEP instruction.

If enabled, the Watchdog Timer will be cleared but keeps running, the $\overline{PD}$ bit (STATUS<3>) is cleared, the $\overline{TO}$ (STATUS<4>) bit is set, and the oscillator driver is turned off. The I/O ports maintain the status they had, before the SLEEP instruction was executed (driving high, low, or hi-impedance).

For lowest current consumption in this mode, place all I/O pins at either V_{DD}, or V_{SS}, ensure no external circuitry is drawing current from the I/O pin, power-down the A/D, disable external clocks. Pull all I/O pins, that are hi-impedance inputs, high or low externally to avoid switching currents caused by floating inputs. The T0CKI input should also be at V_{DD} or V_{SS} for lowest current consumption. The contribution from on-chip pull-ups on PORTB should be considered.

The $\overline{MCLR}$ pin must be at a logic high level (V_{IHMC}).

14.8.1 WAKE-UP FROM SLEEP

The device can wake up from SLEEP through one of the following events:

1. External reset input on $\overline{MCLR}$ pin.
2. Watchdog Timer Wake-up (if WDT was enabled).
3. Interrupt from RB0/INT pin, RB port change, or some peripheral interrupts.

External $\overline{MCLR}$ Reset will cause a device reset. All other events are considered a continuation of program execution and cause a “wake-up”. The $\overline{TO}$ and $\overline{PD}$ bits in the STATUS register can be used to determine the cause of device reset. The $\overline{PD}$ bit, which is set on power-up is cleared when SLEEP is invoked. The $\overline{TO}$ bit is cleared if a WDT time-out occurred (and caused wake-up).

The following peripheral interrupts can wake the device from SLEEP:

1. TMR1 interrupt. Timer1 must be operating as an asynchronous counter.
2. SSP (Start/Stop) bit detect interrupt.
3. SSP transmit or receive in slave mode (SPI/I^2C).
4. CCP capture mode interrupt.
5. A/D conversion (when A/D clock source is RC).
6. Special event trigger (Timer1 in asynchronous mode using an external clock).
7. LCD module.

Other peripherals can not generate interrupts since during SLEEP, no on-chip Q clocks are present.

When the SLEEP instruction is being executed, the next instruction (PC + 1) is pre-fetched. For the device to wake-up through an interrupt event, the corresponding interrupt enable bit must be set (enabled). Wake-up is regardless of the state of the GIE bit. If the GIE bit is clear (disabled), the device continues execution at the instruction after the SLEEP instruction. If the GIE bit is set (enabled), the device executes the instruction after the SLEEP instruction and then branches to the interrupt address (0004h). In cases where the execution of the instruction following SLEEP is not desirable, the user should have a NOP after the SLEEP instruction.

14.8.2 WAKE-UP USING INTERRUPTS

When global interrupts are disabled (GIE cleared) and any interrupt source has both its interrupt enable bit and interrupt flag bit set, one of the following will occur:

- If the interrupt occurs **before** the execution of a SLEEP instruction, the SLEEP instruction will complete as a NOP. Therefore, the WDT and WDT postscaler will not be cleared, the $\overline{TO}$ bit will not be set and $\overline{PD}$ bits will not be cleared.
- If the interrupt occurs **during or after** the execution of a SLEEP instruction, the device will immediately wake up from sleep. The SLEEP instruction will be completely executed before the wake-up. Therefore, the WDT and WDT postscaler will be cleared, the $\overline{TO}$ bit will be set and the $\overline{PD}$ bit will be cleared.

Even if the flag bits were checked before executing a SLEEP instruction, it may be possible for flag bits to become set before the SLEEP instruction completes. To determine whether a SLEEP instruction executed, test the $\overline{PD}$ bit. If the $\overline{PD}$ bit is set, the SLEEP instruction was executed as a NOP.

To ensure that the WDT is cleared, a CLRWDT instruction should be executed before a SLEEP instruction.

FIGURE 14-18:WAKE-UP FROM SLEEP THROUGH INTERRUPT

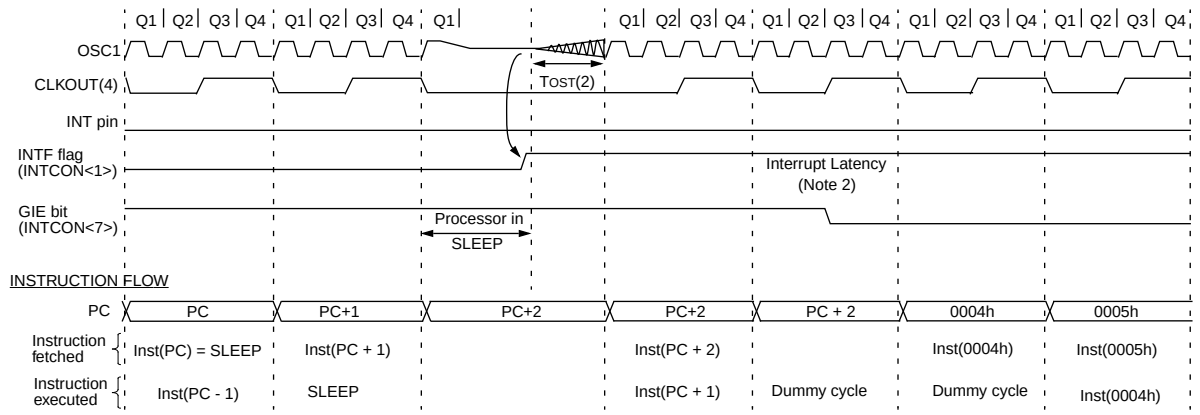

Note 1: XT, HS or LP oscillator mode assumed.
2: TOST = 1024TOSC (drawing not to scale) This delay will not be there for RC osc mode.
3: GIE = '1' assumed. In this case after wake- up, the processor jumps to the interrupt routine. If GIE = '0', execution will continue in-line.
4: CLKOUT is not available in these osc modes, but shown here for timing reference.

14.9 Program Verification/Code Protection

If the code protection bit(s) have not been programmed, the on-chip program memory can be read out for verification purposes.

Note:	Microchip does not recommend code protecting windowed devices.

14.10 ID Locations

Four memory locations (2000h - 2003h) are designated as ID locations where the user can store checksum or other code-identification numbers. These locations are not accessible during normal execution but are readable and writable during program/verify. It is recommended that only the 4 least significant bits of the ID location are used.

14.11 In-Circuit Serial Programming

PIC16CXXX microcontrollers can be serially programmed while in the end application circuit. This is simply done with two lines for clock and data, and three other lines for power, ground, and the programming voltage. This allows customers to manufacture boards with unprogrammed devices, and then program the microcontroller just before shipping the product. This also allows the most recent firmware or a custom firmware to be programmed.

The device is placed into a program/verify mode by holding the RB6 and RB7 pins low while raising the $\overline{MCLR}$ (V_{PP}) pin from V_{IL} to V_{IHH} (see programming specification). RB6 becomes the programming clock and RB7 becomes the programming data. Both RB6 and RB7 are Schmitt Trigger inputs in this mode.

After reset, to place the device into program/verify mode, the program counter (PC) is at location 00h. A 6-bit command is then supplied to the device. Depending on the command, 14-bits of program data are then supplied to or from the device, depending if the command was a load or a read. For complete details of serial programming, please refer to the PIC16C6X/7X Programming Specifications (Literature #DS30228).

FIGURE 14-19:TYPICAL IN-CIRCUIT SERIAL PROGRAMMING CONNECTION

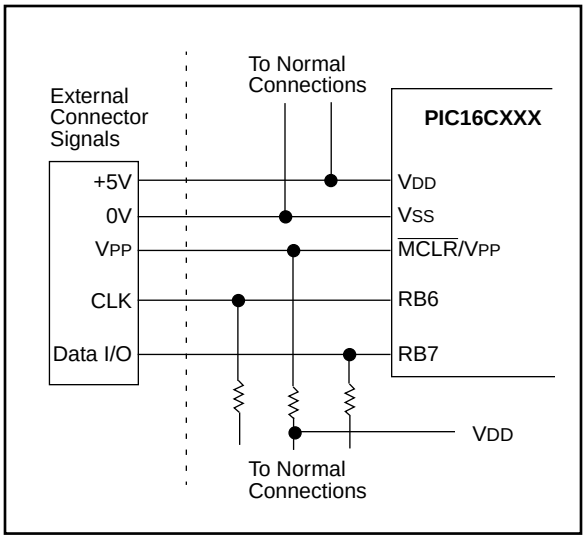

© 1997 Microchip Technology Inc.

15.0 INSTRUCTION SET SUMMARY

Each PIC16CXXX instruction is a 14-bit word divided into an OPCODE which specifies the instruction type and one or more operands which further specify the operation of the instruction. The PIC16CXX instruction set summary in Table 15-2 lists **byte-oriented**, **bit-oriented**, and **literal and control** operations. Table 15-1 shows the opcode field descriptions.

For **byte-oriented** instructions, 'f' represents a file register designator and 'd' represents a destination designator. The file register designator specifies which file register is to be used by the instruction.

The destination designator specifies where the result of the operation is to be placed. If 'd' is zero, the result is placed in the W register. If 'd' is one, the result is placed in the file register specified in the instruction.

For **bit-oriented** instructions, 'b' represents a bit field designator which selects the number of the bit affected by the operation, while 'f' represents the number of the file in which the bit is located.

For **literal and control** operations, 'k' represents an eight or eleven bit constant or literal value.

The instruction set is highly orthogonal and is grouped into three basic categories:

- **Byte-oriented** operations
- **Bit-oriented** operations
- **Literal and control** operations

FIGURE 15-1: GENERAL FORMAT FOR INSTRUCTIONS

Byte-oriented file register operations

13 – 8	7	6 – 0
OPCODE	d	f (FILE #)

d = 0 for destination W
d = 1 for destination f
f = 7-bit file register address

Bit-oriented file register operations

13 – 10	9 – 7	6 – 0
OPCODE	b (BIT #)	f (FILE #)

b = 3-bit bit address
f = 7-bit file register address

Literal and control operations

General

13 – 8	7 – 0
OPCODE	k (literal)

k = 8-bit immediate value

`CALL` and `GOTO` instructions only

13 – 11	10 – 0
OPCODE	k (literal)

k = 11-bit immediate value

TABLE 15-1: OPCODE FIELD DESCRIPTIONS

Field	Description
`f`	Register file address (0x00 to 0x7F)
`W`	Working register (accumulator)
`b`	Bit address within an 8-bit file register
`k`	Literal field, constant data or label
`x`	Don't care location (= 0 or 1) The assembler will generate code with x = 0. It is the recommended form of use for compatibility with all Microchip software tools.
`d`	Destination select; d = 0: store result in W, d = 1: store result in file register f. Default is d = 1
`label`	Label name
`TOS`	Top of Stack
`PC`	Program Counter
`PCLATH`	Program Counter High Latch
`GIE`	Global Interrupt Enable bit
`WDT`	Watchdog Timer/Counter
$\overline{\text{TO}}$	Time-out bit
$\overline{\text{PD}}$	Power-down bit
`dest`	Destination either the W register or the specified register file location
[ ]	Options
( )	Contents
→	Assigned to
< >	Register bit field
∈	In the set of
italics	User defined term (font is courier)

All instructions are executed within one single instruction cycle, unless a conditional test is true or the program counter is changed as a result of an instruction. In this case, the execution takes two instruction cycles with the second cycle executed as a NOP. One instruction cycle consists of four oscillator periods. Thus, for an oscillator frequency of 4 MHz, the normal instruction execution time is 1 µs. If a conditional test is true or the program counter is changed as a result of an instruction, the instruction execution time is 2 µs.

Table 15-2 lists the instructions recognized by the MPASM assembler.

Figure 15-1 shows the general formats that the instructions can have.

> **Note:** To maintain upward compatibility with future PIC16CXXX products, do not use the `OPTION` and `TRIS` instructions.

All examples use the following format to represent a hexadecimal number:

0xhh

where h signifies a hexadecimal digit.

TABLE 15-2: PIC16CXXX INSTRUCTION SET

Mnemonic, Operands		Description	Cycles	14-Bit Opcode MSb			LSb	Status Affected	Notes
BYTE-ORIENTED FILE REGISTER OPERATIONS									
ADDWF	**f, d**	Add W and f	1	00	0111	dfff	ffff	C,DC,Z	1,2
ANDWF	**f, d**	AND W with f	1	00	0101	dfff	ffff	Z	1,2
CLRF	**f**	Clear f	1	00	0001	lfff	ffff	Z	2
CLRW	**-**	Clear W	1	00	0001	0xxx	xxxx	Z	
COMF	**f, d**	Complement f	1	00	1001	dfff	ffff	Z	1,2
DECF	**f, d**	Decrement f	1	00	0011	dfff	ffff	Z	1,2
DECFSZ	**f, d**	Decrement f, Skip if 0	1(2)	00	1011	dfff	ffff		1,2,3
INCF	**f, d**	Increment f	1	00	1010	dfff	ffff	Z	1,2
INCFSZ	**f, d**	Increment f, Skip if 0	1(2)	00	1111	dfff	ffff		1,2,3
IORWF	**f, d**	Inclusive OR W with f	1	00	0100	dfff	ffff	Z	1,2
MOVF	**f, d**	Move f	1	00	1000	dfff	ffff	Z	1,2
MOVWF	**f**	Move W to f	1	00	0000	lfff	ffff		
NOP	**-**	No Operation	1	00	0000	0xx0	0000		
RLF	**f, d**	Rotate Left f through Carry	1	00	1101	dfff	ffff	C	1,2
RRF	**f, d**	Rotate Right f through Carry	1	00	1100	dfff	ffff	C	1,2
SUBWF	**f, d**	Subtract W from f	1	00	0010	dfff	ffff	C,DC,Z	1,2
SWAPF	**f, d**	Swap nibbles in f	1	00	1110	dfff	ffff		1,2
XORWF	**f, d**	Exclusive OR W with f	1	00	0110	dfff	ffff	Z	1,2
BIT-ORIENTED FILE REGISTER OPERATIONS									
BCF	**f, b**	Bit Clear f	1	01	00bb	bfff	ffff		1,2
BSF	**f, b**	Bit Set f	1	01	01bb	bfff	ffff		1,2
BTFSC	**f, b**	Bit Test f, Skip if Clear	1 (2)	01	10bb	bfff	ffff		3
BTFSS	**f, b**	Bit Test f, Skip if Set	1 (2)	01	11bb	bfff	ffff		3
LITERAL AND CONTROL OPERATIONS									
ADDLW	**k**	Add literal and W	1	11	111x	kkkk	kkkk	C,DC,Z	
ANDLW	**k**	AND literal with W	1	11	1001	kkkk	kkkk	Z	
CALL	**k**	Call subroutine	2	10	0kkk	kkkk	kkkk		
CLRWDT	**-**	Clear Watchdog Timer	1	00	0000	0110	0100	$\overline{TO}$,$\overline{PD}$	
GOTO	**k**	Go to address	2	10	1kkk	kkkk	kkkk		
IORLW	**k**	Inclusive OR literal with W	1	11	1000	kkkk	kkkk	Z	
MOVLW	**k**	Move literal to W	1	11	00xx	kkkk	kkkk		
RETFIE	**-**	Return from interrupt	2	00	0000	0000	1001		
RETLW	**k**	Return with literal in W	2	11	01xx	kkkk	kkkk		
RETURN	**-**	Return from Subroutine	2	00	0000	0000	1000		
SLEEP	**-**	Go into standby mode	1	00	0000	0110	0011	$\overline{TO}$,$\overline{PD}$	
SUBLW	**k**	Subtract W from literal	1	11	110x	kkkk	kkkk	C,DC,Z	
XORLW	**k**	Exclusive OR literal with W	1	11	1010	kkkk	kkkk	Z	

Note 1: When an I/O register is modified as a function of itself (e.g., `MOVF PORTB, 1`), the value used will be that value present on the pins themselves. For example, if the data latch is '1' for a pin configured as input and is driven low by an external device, the data will be written back with a '0'.

2: If this instruction is executed on the TMR0 register (and, where applicable, d = 1), the prescaler will be cleared if assigned to the Timer0 Module.

3: If Program Counter (PC) is modified or a conditional test is true, the instruction requires two cycles. The second cycle is executed as a NOP.

© 1997 Microchip Technology Inc.

15.1 Instruction Descriptions

ADDLW **Add Literal and W**

Syntax: [*label*] ADDLW k

Operands: $0 \le k \le 255$

Operation: (W) + k → (W)

Status Affected: C, DC, Z

Encoding:

11	111x	kkkk	kkkk

Description: The contents of the W register are added to the eight bit literal 'k' and the result is placed in the W register.

Words: 1

Cycles: 1

Q Cycle Activity:

Q1	Q2	Q3	Q4
Decode	Read literal 'k'	Process data	Write to W

Example:

```
ADDLW   0x15
```

Before Instruction
W = 0x10
After Instruction
W = 0x25

ADDWF **Add W and f**

Syntax: [*label*] ADDWF f,d

Operands: $0 \le f \le 127$
$d \in [0,1]$

Operation: (W) + (f) → (destination)

Status Affected: C, DC, Z

Encoding:

00	0111	dfff	ffff

Description: Add the contents of the W register with register 'f'. If 'd' is 0 the result is stored in the W register. If 'd' is 1 the result is stored back in register 'f'.

Words: 1

Cycles: 1

Q Cycle Activity:

Q1	Q2	Q3	Q4
Decode	Read register 'f'	Process data	Write to destination

Example

```
ADDWF   FSR, 0
```

Before Instruction
W = 0x17
FSR = 0xC2
After Instruction
W = 0xD9
FSR = 0xC2

ANDLW — AND Literal with W

Syntax: [*label*] ANDLW k

Operands: $0 \le k \le 255$

Operation: (W) .AND. (k) → (W)

Status Affected: Z

Encoding:

11	1001	kkkk	kkkk

Description: The contents of W register are AND'ed with the eight bit literal 'k'. The result is placed in the W register.

Words: 1

Cycles: 1

Q Cycle Activity:

Q1	Q2	Q3	Q4
Decode	Read literal "k"	Process data	Write to W

Example

```
ANDLW   0x5F
```

Before Instruction
W = 0xA3
After Instruction
W = 0x03

ANDWF — AND W with f

Syntax: [*label*] ANDWF f,d

Operands: $0 \le f \le 127$
$d \in [0,1]$

Operation: (W) .AND. (f) → (destination)

Status Affected: Z

Encoding:

00	0101	dfff	ffff

Description: AND the W register with register 'f'. If 'd' is 0 the result is stored in the W register. If 'd' is 1 the result is stored back in register 'f'.

Words: 1

Cycles: 1

Q Cycle Activity:

Q1	Q2	Q3	Q4
Decode	Read register 'f'	Process data	Write to destination

Example

```
ANDWF   FSR, 1
```

Before Instruction
W = 0x17
FSR = 0xC2
After Instruction
W = 0x17
FSR = 0x02

BCF — Bit Clear f

Syntax: [*label*] BCF f,b

Operands: $0 \le f \le 127$
$0 \le b \le 7$

Operation: 0 → (f<b>)

Status Affected: None

Encoding:

01	00bb	bfff	ffff

Description: Bit 'b' in register 'f' is cleared.

Words: 1

Cycles: 1

Q Cycle Activity:

Q1	Q2	Q3	Q4
Decode	Read register 'f'	Process data	Write register 'f'

Example

```
BCF     FLAG_REG, 7
```

Before Instruction
FLAG_REG = 0xC7
After Instruction
FLAG_REG = 0x47

© 1997 Microchip Technology Inc.

BSF — Bit Set f

Syntax: [*label*] BSF f,b

Operands: $0 \le f \le 127$
$0 \le b \le 7$

Operation: $1 \rightarrow$ (f<b>)

Status Affected: None

Encoding:

01	01bb	bfff	ffff

Description: Bit 'b' in register 'f' is set.

Words: 1

Cycles: 1

Q Cycle Activity:

Q1	Q2	Q3	Q4
Decode	Read register 'f'	Process data	Write register 'f'

Example

```
BSF     FLAG_REG,   7
```

Before Instruction
FLAG_REG = 0x0A
After Instruction
FLAG_REG = 0x8A

BTFSC — Bit Test, Skip if Clear

Syntax: [*label*] BTFSC f,b

Operands: $0 \le f \le 127$
$0 \le b \le 7$

Operation: skip if (f<b>) = 0

Status Affected: None

Encoding:

01	10bb	bfff	ffff

Description: If bit 'b' in register 'f' is '1' then the next instruction is executed.
If bit 'b', in register 'f', is '0' then the next instruction is discarded, and a NOP is executed instead, making this a 2TCY instruction.

Words: 1

Cycles: 1(2)

Q Cycle Activity:

Q1	Q2	Q3	Q4
Decode	Read register 'f'	Process data	No-Operation

If Skip: (2nd Cycle)

Q1	Q2	Q3	Q4
No-Operation	No-Operation	No-Operation	No-Operation

Example

```
HERE    BTFSC   FLAG,1
FALSE   GOTO    PROCESS_CODE
TRUE    •
        •
        •
```

Before Instruction
PC = address HERE
After Instruction
if FLAG<1> = 0,
PC = address TRUE
if FLAG<1>=1,
PC = address FALSE

BTFSS — Bit Test f, Skip if Set

Syntax: [*label*] BTFSS f,b

Operands: $0 \le f \le 127$
$0 \le b < 7$

Operation: skip if (f<b>) = 1

Status Affected: None

Encoding:

01	11bb	bfff	ffff

Description: If bit 'b' in register 'f' is '0' then the next instruction is executed.
If bit 'b' is '1', then the next instruction is discarded and a NOP is executed instead, making this a 2TCY instruction.

Words: 1

Cycles: 1(2)

Q Cycle Activity:

Q1	Q2	Q3	Q4
Decode	Read register 'f'	Process data	No-Operation

If Skip: (2nd Cycle)

Q1	Q2	Q3	Q4
No-Operation	No-Operation	No-Operation	No-Operation

Example

```
HERE    BTFSC   FLAG,1
FALSE   GOTO    PROCESS_CODE
TRUE    •
        •
        •
```

Before Instruction
PC = address HERE
After Instruction
if FLAG<1> = 0,
PC = address FALSE
if FLAG<1> = 1,
PC = address TRUE

CALL — Call Subroutine

Syntax: [*label*] CALL k

Operands: $0 \le k \le 2047$

Operation: (PC)+ 1→ TOS,
k → PC<10:0>,
(PCLATH<4:3>) → PC<12:11>

Status Affected: None

Encoding:

10	0kkk	kkkk	kkkk

Description: Call Subroutine. First, return address (PC+1) is pushed onto the stack. The eleven bit immediate address is loaded into PC bits <10:0>. The upper bits of the PC are loaded from PCLATH. CALL is a two cycle instruction.

Words: 1

Cycles: 2

Q Cycle Activity:

	Q1	Q2	Q3	Q4
1st Cycle	Decode	Read literal 'k', Push PC to Stack	Process data	Write to PC
2nd Cycle	No-Operation	No-Operation	No-Operation	No-Operation

Example

```
HERE    CALL    THERE
```

Before Instruction
PC = Address HERE
After Instruction
PC = Address THERE
TOS = Address HERE+1

© 1997 Microchip Technology Inc.

CLRF — Clear f

Syntax:	[*label*] CLRF f
Operands:	$0 \le f \le 127$
Operation:	00h → (f) 1 → Z
Status Affected:	Z
Encoding:	00 | 0001 | 1fff | ffff
Description:	The contents of register 'f' are cleared and the Z bit is set.
Words:	1
Cycles:	1

Q Cycle Activity:

Q1	Q2	Q3	Q4
Decode	Read register 'f'	Process data	Write register 'f'

Example

```
CLRF    FLAG_REG
```

Before Instruction
FLAG_REG = 0x5A
After Instruction
FLAG_REG = 0x00
Z = 1

CLRW — Clear W

Syntax:	[*label*] CLRW
Operands:	None
Operation:	00h → (W) 1 → Z
Status Affected:	Z
Encoding:	00 | 0001 | 0xxx | xxxx
Description:	W register is cleared. Zero bit (Z) is set.
Words:	1
Cycles:	1

Q Cycle Activity:

Q1	Q2	Q3	Q4
Decode	No-Operation	Process data	Write to W

Example

```
CLRW
```

Before Instruction
W = 0x5A
After Instruction
W = 0x00
Z = 1

CLRWDT — Clear Watchdog Timer

Syntax: [*label*] CLRWDT

Operands: None

Operation: 00h → WDT
0 → WDT prescaler,
1 → $\overline{TO}$
1 → $\overline{PD}$

Status Affected: $\overline{TO}$, $\overline{PD}$

Encoding:

00	0000	0110	0100

Description: CLRWDT instruction resets the Watchdog Timer. It also resets the prescaler of the WDT. Status bits $\overline{TO}$ and $\overline{PD}$ are set.

Words: 1

Cycles: 1

Q Cycle Activity:

Q1	Q2	Q3	Q4
Decode	No-Operation	Process data	Clear WDT Counter

Example

```
CLRWDT
```

Before Instruction
WDT counter = ?
After Instruction
WDT counter = 0x00
WDT prescaler = 0
$\overline{TO}$ = 1
$\overline{PD}$ = 1

COMF — Complement f

Syntax: [*label*] COMF f,d

Operands: $0 \le f \le 127$
$d \in [0,1]$

Operation: $(\bar{f}) \rightarrow$ (destination)

Status Affected: Z

Encoding:

00	1001	dfff	ffff

Description: The contents of register 'f' are complemented. If 'd' is 0 the result is stored in W. If 'd' is 1 the result is stored back in register 'f'.

Words: 1

Cycles: 1

Q Cycle Activity:

Q1	Q2	Q3	Q4
Decode	Read register 'f'	Process data	Write to destination

Example

```
COMF        REG1,0
```

Before Instruction
REG1 = 0x13
After Instruction
REG1 = 0x13
W = 0xEC

DECF — Decrement f

Syntax: [*label*] DECF f,d

Operands: $0 \le f \le 127$
$d \in [0,1]$

Operation: (f) - 1 → (destination)

Status Affected: Z

Encoding:

00	0011	dfff	ffff

Description: Decrement register 'f'. If 'd' is 0 the result is stored in the W register. If 'd' is 1 the result is stored back in register 'f'.

Words: 1

Cycles: 1

Q Cycle Activity:

Q1	Q2	Q3	Q4
Decode	Read register 'f'	Process data	Write to destination

Example

```
DECF    CNT, 1
```

Before Instruction
CNT = 0x01
Z = 0
After Instruction
CNT = 0x00
Z = 1

© 1997 Microchip Technology Inc.

DECFSZ — Decrement f, Skip if 0

Syntax: [*label*] DECFSZ f,d

Operands: $0 \le f \le 127$
$d \in [0,1]$

Operation: (f) - 1 → (destination);
skip if result = 0

Status Affected: None

Encoding:

00	1011	dfff	ffff

Description: The contents of register 'f' are decremented. If 'd' is 0 the result is placed in the W register. If 'd' is 1 the result is placed back in register 'f'.
If the result is 1, the next instruction, is executed. If the result is 0, then a NOP is executed instead making it a 2TCY instruction.

Words: 1

Cycles: 1(2)

Q Cycle Activity:

Q1	Q2	Q3	Q4
Decode	Read register 'f'	Process data	Write to destination

If Skip: (2nd Cycle)

Q1	Q2	Q3	Q4
No-Operation	No-Operation	No-Operation	No-Operation

Example

```
HERE      DECFSZ   CNT, 1
          GOTO     LOOP
CONTINUE  •
          •
          •
```

Before Instruction
PC = address HERE
After Instruction
CNT = CNT - 1
if CNT = 0,
PC = address CONTINUE
if CNT ≠ 0,
PC = address HERE+1

GOTO — Unconditional Branch

Syntax: [*label*] GOTO k

Operands: $0 \le k \le 2047$

Operation: k → PC<10:0>
PCLATH<4:3> → PC<12:11>

Status Affected: None

Encoding:

10	1kkk	kkkk	kkkk

Description: GOTO is an unconditional branch. The eleven bit immediate value is loaded into PC bits <10:0>. The upper bits of PC are loaded from PCLATH<4:3>. GOTO is a two cycle instruction.

Words: 1

Cycles: 2

Q Cycle Activity:

	Q1	Q2	Q3	Q4
1st Cycle	Decode	Read literal 'k'	Process data	Write to PC
2nd Cycle	No-Operation	No-Operation	No-Operation	No-Operation

Example

```
GOTO THERE
```

After Instruction
PC = Address THERE

INCF — Increment f

Syntax: [*label*] INCF f,d

Operands: $0 \le f \le 127$
$d \in [0,1]$

Operation: (f) + 1 → (destination)

Status Affected: Z

Encoding:

00	1010	dfff	ffff

Description: The contents of register 'f' are incremented. If 'd' is 0 the result is placed in the W register. If 'd' is 1 the result is placed back in register 'f'.

Words: 1

Cycles: 1

Q Cycle Activity:

Q1	Q2	Q3	Q4
Decode	Read register 'f'	Process data	Write to destination

Example

```
INCF    CNT, 1
```

Before Instruction
CNT = 0xFF
Z = 0
After Instruction
CNT = 0x00
Z = 1

INCFSZ — Increment f, Skip if 0

Syntax: [*label*] INCFSZ f,d

Operands: $0 \le f \le 127$
$d \in [0,1]$

Operation: (f) + 1 → (destination), skip if result = 0

Status Affected: None

Encoding:

00	1111	dfff	ffff

Description: The contents of register 'f' are incremented. If 'd' is 0 the result is placed in the W register. If 'd' is 1 the result is placed back in register 'f'.
If the result is 1, the next instruction is executed. If the result is 0, a NOP is executed instead making it a 2TCY instruction.

Words: 1

Cycles: 1(2)

Q Cycle Activity:

Q1	Q2	Q3	Q4
Decode	Read register 'f'	Process data	Write to destination

If Skip: (2nd Cycle)

Q1	Q2	Q3	Q4
No-Operation	No-Operation	No-Operation	No-Operation

Example

```
HERE      INCFSZ    CNT, 1
          GOTO      LOOP
CONTINUE  •
          •
          •
```

Before Instruction
PC = address HERE
After Instruction
CNT = CNT + 1
if CNT= 0,
PC = address CONTINUE
if CNT≠ 0,
PC = address HERE +1

© 1997 Microchip Technology Inc.

IORLW — Inclusive OR Literal with W

Syntax: [*label*] IORLW k

Operands: $0 \le k \le 255$

Operation: (W) .OR. k → (W)

Status Affected: Z

Encoding:

11	1000	kkkk	kkkk

Description: The contents of the W register is OR'ed with the eight bit literal 'k'. The result is placed in the W register.

Words: 1

Cycles: 1

Q Cycle Activity:

Q1	Q2	Q3	Q4
Decode	Read literal 'k'	Process data	Write to W

Example

```
IORLW   0x35
```

Before Instruction
W = 0x9A
After Instruction
W = 0xBF
Z = 1

IORWF — Inclusive OR W with f

Syntax: [*label*] IORWF f,d

Operands: $0 \le f \le 127$
$d \in [0,1]$

Operation: (W) .OR. (f) → (destination)

Status Affected: $\overline{Z}$

Encoding:

00	0100	dfff	ffff

Description: Inclusive OR the W register with register 'f'. If 'd' is 0 the result is placed in the W register. If 'd' is 1 the result is placed back in register 'f'.

Words: 1

Cycles: 1

Q Cycle Activity:

Q1	Q2	Q3	Q4
Decode	Read register 'f'	Process data	Write to destination

Example

```
IORWF   RESULT, 0
```

Before Instruction
RESULT = 0x13
W = 0x91
After Instruction
RESULT = 0x13
W = 0x93
Z = 1

© 1997 Microchip Technology Inc.

MOVF — Move f

Syntax: [*label*] MOVF f,d

Operands: $0 \le f \le 127$
$d \in [0,1]$

Operation: (f) → (destination)

Status Affected: Z

Encoding:

00	1000	dfff	ffff

Description: The contents of register f is moved to a destination dependant upon the status of d. If d = 0, destination is W register. If d = 1, the destination is file register f itself. d = 1 is useful to test a file register since status flag Z is affected.

Words: 1

Cycles: 1

Q Cycle Activity:

Q1	Q2	Q3	Q4
Decode	Read register 'f'	Process data	Write to destination

Example

```
MOVF    FSR, 0
```

After Instruction
W = value in FSR register
Z = 1

MOVLW — Move Literal to W

Syntax: [*label*] MOVLW k

Operands: $0 \le k \le 255$

Operation: k → (W)

Status Affected: None

Encoding:

11	00xx	kkkk	kkkk

Description: The eight bit literal 'k' is loaded into W register. The don't cares will assemble as 0's.

Words: 1

Cycles: 1

Q Cycle Activity:

Q1	Q2	Q3	Q4
Decode	Read literal 'k'	Process data	Write to W

Example

```
MOVLW   0x5A
```

After Instruction
W = 0x5A

MOVWF — Move W to f

Syntax: [*label*] MOVWF f

Operands: $0 \le f \le 127$

Operation: (W) → (f)

Status Affected: None

Encoding:

00	0000	1fff	ffff

Description: Move data from W register to register 'f'.

Words: 1

Cycles: 1

Q Cycle Activity:

Q1	Q2	Q3	Q4
Decode	Read register 'f'	Process data	Write register 'f'

Example

```
MOVWF   OPTION_REG
```

Before Instruction
OPTION = 0xFF
W = 0x4F
After Instruction
OPTION = 0x4F
W = 0x4F

© 1997 Microchip Technology Inc.

NOP	No Operation
Syntax:	[*label*] NOP
Operands:	None
Operation:	No operation
Status Affected:	None
Encoding:	00 | 0000 | 0xx0 | 0000
Description:	No operation.
Words:	1
Cycles:	1

Q Cycle Activity:

Q1	Q2	Q3	Q4
Decode	No-Operation	No-Operation	No-Operation

Example

```
NOP
```

OPTION	Load Option Register
Syntax:	[*label*] OPTION
Operands:	None
Operation:	(W) → OPTION
Status Affected:	None
Encoding:	00 | 0000 | 0110 | 0010
Description:	The contents of the W register are loaded in the OPTION register. This instruction is supported for code compatibility with PIC16C5X products. Since OPTION is a readable/writable register, the user can directly address it.
Words:	1
Cycles:	1
Example	**To maintain upward compatibility with future PIC16CXX products, do not use this instruction.**

RETFIE	Return from Interrupt
Syntax:	[*label*] RETFIE
Operands:	None
Operation:	TOS → PC, 1 → GIE
Status Affected:	None
Encoding:	00 | 0000 | 0000 | 1001
Description:	Return from Interrupt. Stack is POPed and Top of Stack (TOS) is loaded in the PC. Interrupts are enabled by setting Global Interrupt Enable bit, GIE (INTCON<7>). This is a two cycle instruction.
Words:	1
Cycles:	2

Q Cycle Activity:

	Q1	Q2	Q3	Q4
1st Cycle	Decode	No-Operation	Set the GIE bit	Pop from the Stack
2nd Cycle	No-Operation	No-Operation	No-Operation	No-Operation

Example

```
RETFIE
```

After Interrupt

PC = TOS
GIE = 1

RETLW — Return with Literal in W

Syntax: [*label*] RETLW k

Operands: $0 \le k \le 255$

Operation: k → (W);
TOS → PC

Status Affected: None

Encoding:

11	01xx	kkkk	kkkk

Description: The W register is loaded with the eight bit literal 'k'. The program counter is loaded from the top of the stack (the return address). This is a two cycle instruction.

Words: 1

Cycles: 2

Q Cycle Activity:

	Q1	Q2	Q3	Q4
1st Cycle	Decode	Read literal 'k'	No-Operation	Write to W, Pop from the Stack
2nd Cycle	No-Operation	No-Operation	No-Operation	No-Operation

Example

```
        CALL TABLE  ;W contains table
                    ;offset value
        •            ;W now has table value
        •
        •
TABLE   ADDWF PC    ;W = offset
        RETLW k1    ;Begin table
        RETLW k2    ;
        •
        •
        •
        RETLW kn    ; End of table
```

Before Instruction
W = 0x07
After Instruction
W = value of k8

RETURN — Return from Subroutine

Syntax: [*label*] RETURN

Operands: None

Operation: TOS → PC

Status Affected: None

Encoding:

00	0000	0000	1000

Description: Return from subroutine. The stack is POPed and the top of the stack (TOS) is loaded into the program counter. This is a two cycle instruction.

Words: 1

Cycles: 2

Q Cycle Activity:

	Q1	Q2	Q3	Q4
1st Cycle	Decode	No-Operation	No-Operation	Pop from the Stack
2nd Cycle	No-Operation	No-Operation	No-Operation	No-Operation

Example

```
RETURN
```

After Interrupt
PC = TOS

© 1997 Microchip Technology Inc.

RLF — Rotate Left f through Carry

Syntax:	[*label*] RLF f,d
Operands:	$0 \le f \le 127$ $d \in [0,1]$
Operation:	See description below
Status Affected:	C
Encoding:	00 | 1101 | dfff | ffff
Description:	The contents of register 'f' are rotated one bit to the left through the Carry Flag. If 'd' is 0 the result is placed in the W register. If 'd' is 1 the result is stored back in register 'f'.

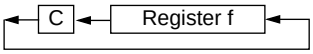

Words:	1
Cycles:	1

Q Cycle Activity:

Q1	Q2	Q3	Q4
Decode	Read register 'f'	Process data	Write to destination

Example

```
RLF        REG1,0
```

Before Instruction
REG1 = 1110 0110
C = 0
After Instruction
REG1 = 1110 0110
W = 1100 1100
C = 1

RRF — Rotate Right f through Carry

Syntax:	[*label*] RRF f,d
Operands:	$0 \le f \le 127$ $d \in [0,1]$
Operation:	See description below
Status Affected:	C
Encoding:	00 | 1100 | dfff | ffff
Description:	The contents of register 'f' are rotated one bit to the right through the Carry Flag. If 'd' is 0 the result is placed in the W register. If 'd' is 1 the result is placed back in register 'f'.

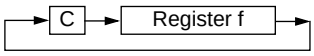

Words:	1
Cycles:	1

Q Cycle Activity:

Q1	Q2	Q3	Q4
Decode	Read register 'f'	Process data	Write to destination

Example

```
RRF        REG1,0
```

Before Instruction
REG1 = 1110 0110
C = 0
After Instruction
REG1 = 1110 0110
W = 0111 0011
C = 0

SLEEP

Syntax: [*label*] SLEEP

Operands: None

Operation: 00h → WDT,
0 → WDT prescaler,
1 → $\overline{TO}$,
0 → $\overline{PD}$

Status Affected: $\overline{TO}$, $\overline{PD}$

Encoding:

00	0000	0110	0011

Description: The power-down status bit, $\overline{PD}$ is cleared. Time-out status bit, $\overline{TO}$ is set. Watchdog Timer and its prescaler are cleared.
The processor is put into SLEEP mode with the oscillator stopped. See Section 14.8 for more details.

Words: 1

Cycles: 1

Q Cycle Activity:

Q1	Q2	Q3	Q4
Decode	No-Operation	No-Operation	Go to Sleep

Example: SLEEP

SUBLW — Subtract W from Literal

Syntax: [*label*] SUBLW k

Operands: $0 \le k \le 255$

Operation: k - (W) → (W)

Status Affected: C, DC, Z

Encoding:

11	110x	kkkk	kkkk

Description: The W register is subtracted (2's complement method) from the eight bit literal 'k'. The result is placed in the W register.

Words: 1

Cycles: 1

Q Cycle Activity:

Q1	Q2	Q3	Q4
Decode	Read literal 'k'	Process data	Write to W

Example 1: `SUBLW 0x02`

Before Instruction
W = 1
C = ?
Z = ?

After Instruction
W = 1
C = 1; result is positive
Z = 0

Example 2: Before Instruction
W = 2
C = ?
Z = ?

After Instruction
W = 0
C = 1; result is zero
Z = 1

Example 3: Before Instruction
W = 3
C = ?
Z = ?

After Instruction
W = 0xFF
C = 0; result is negative
Z = 0

© 1997 Microchip Technology Inc.

SUBWF — Subtract W from f

Syntax: [*label*] SUBWF f,d

Operands: $0 \le f \le 127$
$d \in [0,1]$

Operation: (f) - (W) → (destination)

Status Affected: C, DC, Z

Encoding:

00	0010	dfff	ffff

Description: Subtract (2's complement method) W register from register 'f'. If 'd' is 0 the result is stored in the W register. If 'd' is 1 the result is stored back in register 'f'.

Words: 1

Cycles: 1

Q Cycle Activity:

Q1	Q2	Q3	Q4
Decode	Read register 'f'	Process data	Write to destination

Example 1: `SUBWF REG1,1`

Before Instruction

REG1 = 3
W = 2
C = ?
Z = ?

After Instruction

REG1 = 1
W = 2
C = 1; result is positive
Z = 0

Example 2: Before Instruction

REG1 = 2
W = 2
C = ?
Z = ?

After Instruction

REG1 = 0
W = 2
C = 1; result is zero
Z = 1

Example 3: Before Instruction

REG1 = 1
W = 2
C = ?
Z = ?

After Instruction

REG1 = 0xFF
W = 2
C = 0; result is negative
Z = 0

SWAPF — Swap Nibbles in f

Syntax: [*label*] SWAPF f,d

Operands: $0 \le f \le 127$
$d \in [0,1]$

Operation: (f<3:0>) → (destination<7:4>),
(f<7:4>) → (destination<3:0>)

Status Affected: None

Encoding:

00	1110	dfff	ffff

Description: The upper and lower nibbles of register 'f' are exchanged. If 'd' is 0 the result is placed in W register. If 'd' is 1 the result is placed in register 'f'.

Words: 1

Cycles: 1

Q Cycle Activity:

Q1	Q2	Q3	Q4
Decode	Read register 'f'	Process data	Write to destination

Example `SWAPF REG, 0`

Before Instruction

REG1 = 0xA5

After Instruction

REG1 = 0xA5
W = 0x5A

TRIS — Load TRIS Register

Syntax: [*label*] TRIS f

Operands: $5 \le f \le 7$

Operation: (W) → TRIS register f;

Status Affected: None

Encoding:

00	0000	0110	0fff

Description: The instruction is supported for code compatibility with the PIC16C5X products. Since TRIS registers are readable and writable, the user can directly address them.

Words: 1

Cycles: 1

Example

To maintain upward compatibility with future PIC16CXX products, do not use this instruction.

© 1997 Microchip Technology Inc.

XORLW — Exclusive OR Literal with W

Syntax: [*label*] XORLW k

Operands: $0 \le k \le 255$

Operation: (W) .XOR. k → (W)

Status Affected: Z

Encoding:

11	1010	kkkk	kkkk

Description: The contents of the W register are XOR'ed with the eight bit literal 'k'. The result is placed in the W register.

Words: 1

Cycles: 1

Q Cycle Activity:

Q1	Q2	Q3	Q4
Decode	Read literal 'k'	Process data	Write to W

Example: `XORLW 0xAF`

Before Instruction

W = 0xB5

After Instruction

W = 0x1A

XORWF — Exclusive OR W with f

Syntax: [*label*] XORWF f,d

Operands: $0 \le f \le 127$
$d \in [0,1]$

Operation: (W) .XOR. (f) → (destination)

Status Affected: Z

Encoding:

00	0110	dfff	ffff

Description: Exclusive OR the contents of the W register with register 'f'. If 'd' is 0 the result is stored in the W register. If 'd' is 1 the result is stored back in register 'f'.

Words: 1

Cycles: 1

Q Cycle Activity:

Q1	Q2	Q3	Q4
Decode	Read register 'f'	Process data	Write to destination

Example `XORWF REG 1`

Before Instruction

REG = 0xAF
W = 0xB5

After Instruction

REG = 0x1A
W = 0xB5

© 1997 Microchip Technology Inc.

16.0 DEVELOPMENT SUPPORT

16.1 Development Tools

The PICmicro™ microcontrollers are supported with a full range of hardware and software development tools:

- PICMASTER/PICMASTER CE Real-Time In-Circuit Emulator
- ICEPIC Low-Cost PIC16C5X and PIC16CXXX In-Circuit Emulator
- PRO MATE® II Universal Programmer
- PICSTART® Plus Entry-Level Prototype Programmer
- PICDEM-1 Low-Cost Demonstration Board
- PICDEM-2 Low-Cost Demonstration Board
- PICDEM-3 Low-Cost Demonstration Board
- MPASM Assembler
- MPLAB™ SIM Software Simulator
- MPLAB-C (C Compiler)
- Fuzzy Logic Development System (*fuzzy*TECH®–MP)

16.2 PICMASTER: High Performance Universal In-Circuit Emulator with MPLAB IDE

The PICMASTER Universal In-Circuit Emulator is intended to provide the product development engineer with a complete microcontroller design tool set for all microcontrollers in the PIC12CXXX, PIC14C000, PIC16C5X, PIC16CXXX and PIC17CXX families. PICMASTER is supplied with the MPLAB™ Integrated Development Environment (IDE), which allows editing, “make” and download, and source debugging from a single environment.

Interchangeable target probes allow the system to be easily reconfigured for emulation of different processors. The universal architecture of the PICMASTER allows expansion to support all new Microchip microcontrollers.

The PICMASTER Emulator System has been designed as a real-time emulation system with advanced features that are generally found on more expensive development tools. The PC compatible 386 (and higher) machine platform and Microsoft Windows® 3.x environment were chosen to best make these features available to you, the end user.

A CE compliant version of PICMASTER is available for European Union (EU) countries.

16.3 ICEPIC: Low-Cost PIC16CXXX In-Circuit Emulator

ICEPIC is a low-cost in-circuit emulator solution for the Microchip PIC16C5X and PIC16CXXX families of 8-bit OTP microcontrollers.

ICEPIC is designed to operate on PC-compatible machines ranging from 286-AT® through Pentium™ based machines under Windows 3.x environment. ICEPIC features real time, non-intrusive emulation.

16.4 PRO MATE II: Universal Programmer

The PRO MATE II Universal Programmer is a full-featured programmer capable of operating in stand-alone mode as well as PC-hosted mode.

The PRO MATE II has programmable V_{DD} and V_{PP} supplies which allows it to verify programmed memory at V_{DD} min and V_{DD} max for maximum reliability. It has an LCD display for displaying error messages, keys to enter commands and a modular detachable socket assembly to support various package types. In stand-alone mode the PRO MATE II can read, verify or program PIC12CXXX, PIC14C000, PIC16C5X, PIC16CXXX and PIC17CXX devices. It can also set configuration and code-protect bits in this mode.

16.5 PICSTART Plus Entry Level Development System

The PICSTART programmer is an easy-to-use, low-cost prototype programmer. It connects to the PC via one of the COM (RS-232) ports. MPLAB Integrated Development Environment software makes using the programmer simple and efficient. PICSTART Plus is not recommended for production programming.

PICSTART Plus supports all PIC12CXXX, PIC14C000, PIC16C5X, PIC16CXXX and PIC17CXX devices with up to 40 pins. Larger pin count devices such as the PIC16C923 and PIC16C924 may be supported with an adapter socket.

© 1997 Microchip Technology Inc.

16.6 PICDEM-1 Low-Cost PICmicro Demonstration Board

The PICDEM-1 is a simple board which demonstrates the capabilities of several of Microchip's microcontrollers. The microcontrollers supported are: PIC16C5X (PIC16C54 to PIC16C58A), PIC16C61, PIC16C62X, PIC16C71, PIC16C8X, PIC17C42, PIC17C43 and PIC17C44. All necessary hardware and software is included to run basic demo programs. The users can program the sample microcontrollers provided with the PICDEM-1 board, on a PRO MATE II or PICSTART-Plus programmer, and easily test firmware. The user can also connect the PICDEM-1 board to the PICMASTER emulator and download the firmware to the emulator for testing. Additional prototype area is available for the user to build some additional hardware and connect it to the microcontroller socket(s). Some of the features include an RS-232 interface, a potentiometer for simulated analog input, push-button switches and eight LEDs connected to PORTB.

16.7 PICDEM-2 Low-Cost PIC16CXX Demonstration Board

The PICDEM-2 is a simple demonstration board that supports the PIC16C62, PIC16C64, PIC16C65, PIC16C73 and PIC16C74 microcontrollers. All the necessary hardware and software is included to run the basic demonstration programs. The user can program the sample microcontrollers provided with the PICDEM-2 board, on a PRO MATE II programmer or PICSTART-Plus, and easily test firmware. The PICMASTER emulator may also be used with the PICDEM-2 board to test firmware. Additional prototype area has been provided to the user for adding additional hardware and connecting it to the microcontroller socket(s). Some of the features include a RS-232 interface, push-button switches, a potentiometer for simulated analog input, a Serial EEPROM to demonstrate usage of the I^2C bus and separate headers for connection to an LCD module and a keypad.

16.8 PICDEM-3 Low-Cost PIC16CXXX Demonstration Board

The PICDEM-3 is a simple demonstration board that supports the PIC16C923 and PIC16C924 in the PLCC package. It will also support future 44-pin PLCC microcontrollers with a LCD Module. All the necessary hardware and software is included to run the basic demonstration programs. The user can program the sample microcontrollers provided with the PICDEM-3 board, on a PRO MATE II programmer or PICSTART Plus with an adapter socket, and easily test firmware. The PICMASTER emulator may also be used with the PICDEM-3 board to test firmware. Additional prototype area has been provided to the user for adding hardware and connecting it to the microcontroller socket(s). Some of the features include an RS-232 interface, push-button switches, a potentiometer for simulated analog input, a thermistor and separate headers for connection to an external LCD module and a keypad. Also provided on the PICDEM-3 board is an LCD panel, with 4 commons and 12 segments, that is capable of displaying time, temperature and day of the week. The PICDEM-3 provides an additional RS-232 interface and Windows 3.1 software for showing the demultiplexed LCD signals on a PC. A simple serial interface allows the user to construct a hardware demultiplexer for the LCD signals.

16.9 MPLAB™ Integrated Development Environment Software

The MPLAB IDE Software brings an ease of software development previously unseen in the 8-bit microcontroller market. MPLAB is a windows based application which contains:

- A full featured editor
- Three operating modes
  - editor
  - emulator
  - simulator
- A project manager
- Customizable tool bar and key mapping
- A status bar with project information
- Extensive on-line help

MPLAB allows you to:

- Edit your source files (either assembly or 'C')
- One touch assemble (or compile) and download to PICmicro tools (automatically updates all project information)
- Debug using:
  - source files
  - absolute listing file
- Transfer data dynamically via DDE (soon to be replaced by OLE)
- Run up to four emulators on the same PC

The ability to use MPLAB with Microchip's simulator allows a consistent platform and the ability to easily switch from the low cost simulator to the full featured emulator with minimal retraining due to development tools.

16.10 Assembler (MPASM)

The MPASM Universal Macro Assembler is a PC-hosted symbolic assembler. It supports all microcontroller series including the PIC12C5XX, PIC14000, PIC16C5X, PIC16CXXX, and PIC17CXX families.

MPASM offers full featured Macro capabilities, conditional assembly, and several source and listing formats. It generates various object code formats to support Microchip's development tools as well as third party programmers.

MPASM allows full symbolic debugging from PICMASTER, Microchip's Universal Emulator System.

© 1997 Microchip Technology Inc.

MPASM has the following features to assist in developing software for specific use applications.

- Provides translation of Assembler source code to object code for all Microchip microcontrollers.
- Macro assembly capability.
- Produces all the files (Object, Listing, Symbol, and special) required for symbolic debug with Microchip's emulator systems.
- Supports Hex (default), Decimal and Octal source and listing formats.

MPASM provides a rich directive language to support programming of the PICmicro. Directives are helpful in making the development of your assemble source code shorter and more maintainable.

16.11 Software Simulator (MPLAB-SIM)

The MPLAB-SIM Software Simulator allows code development in a PC host environment. It allows the user to simulate the PICmicro series microcontrollers on an instruction level. On any given instruction, the user may examine or modify any of the data areas or provide external stimulus to any of the pins. The input/output radix can be set by the user and the execution can be performed in; single step, execute until break, or in a trace mode.

MPLAB-SIM fully supports symbolic debugging using MPLAB-C and MPASM. The Software Simulator offers the low cost flexibility to develop and debug code outside of the laboratory environment making it an excellent multi-project software development tool.

16.12 C Compiler (MPLAB-C)

The MPLAB-C Code Development System is a complete 'C' compiler and integrated development environment for Microchip's PICmicro family of microcontrollers. The compiler provides powerful integration capabilities and ease of use not found with other compilers.

For easier source level debugging, the compiler provides symbol information that is compatible with the MPLAB IDE memory display.

16.13 Fuzzy Logic Development System (*fuzzy*TECH-MP)

*fuzzy*TECH-MP fuzzy logic development tool is available in two versions - a low cost introductory version, MP Explorer, for designers to gain a comprehensive working knowledge of fuzzy logic system design; and a full-featured version, *fuzzy*TECH-MP, edition for implementing more complex systems.

Both versions include Microchip's *fuzzy*LAB™ demonstration board for hands-on experience with fuzzy logic systems implementation.

16.14 MP-DriveWay™ – Application Code Generator

MP-DriveWay is an easy-to-use Windows-based Application Code Generator. With MP-DriveWay you can visually configure all the peripherals in a PICmicro device and, with a click of the mouse, generate all the initialization and many functional code modules in C language. The output is fully compatible with Microchip's MPLAB-C C compiler. The code produced is highly modular and allows easy integration of your own code. MP-DriveWay is intelligent enough to maintain your code through subsequent code generation.

16.15 SEEVAL® Evaluation and Programming System

The SEEVAL SEEPROM Designer's Kit supports all Microchip 2-wire and 3-wire Serial EEPROMs. The kit includes everything necessary to read, write, erase or program special features of any Microchip SEEPROM product including Smart Serials™ and secure serials. The Total Endurance™ Disk is included to aid in trade-off analysis and reliability calculations. The total kit can significantly reduce time-to-market and result in an optimized system.

16.16 KEELOQ® Evaluation and Programming Tools

KEELOQ evaluation and programming tools support Microchips HCS Secure Data Products. The HCS evaluation kit includes an LCD display to show changing codes, a decoder to decode transmissions, and a programming interface to program test transmitters.

TABLE 16-1: DEVELOPMENT TOOLS FROM MICROCHIP

		PIC12C5XX	PIC14000	PIC16C5X	PIC16CXXX	PIC16C6X	PIC16C7XX	PIC16C8X	PIC16C9XX	PIC17C4X	PIC17C75X	24CXX 25CXX 93CXX	HCS200 HCS300 HCS301
Emulator Products	PICMASTER®/ PICMASTER-CE In-Circuit Emulator	✔	✔	✔	✔	✔	✔	✔	✔	✔	Available 3Q97		
	ICEPIC Low-Cost In-Circuit Emulator	✔		✔	✔	✔	✔	✔					
Software Tools	MPLAB™ Integrated Development Environment	✔	✔	✔	✔	✔	✔	✔	✔	✔	✔		
	MPLAB™ C Compiler	✔	✔	✔	✔	✔	✔	✔	✔	✔	✔		
	*fuzzy*TECH®-MP Explorer/Edition Fuzzy Logic Dev. Tool	✔	✔	✔	✔	✔	✔	✔	✔	✔			
	MP-DriveWay™ Applications Code Generator			✔	✔	✔	✔	✔		✔			
	Total Endurance™ Software Model											✔	
Programmers	PICSTART® Lite Ultra Low-Cost Dev. Kit			✔		✔	✔	✔					
	PICSTART® Plus Low-Cost Universal Dev. Kit	✔	✔	✔	✔	✔	✔	✔	✔	✔	✔		
	PRO MATE® II Universal Programmer	✔	✔	✔	✔	✔	✔	✔	✔	✔	✔	✔	✔
	KEELOQ® Programmer												✔
Demo Boards	SEEVAL® Designers Kit											✔	
	PICDEM-1			✔	✔			✔		✔			
	PICDEM-2					✔	✔						
	PICDEM-3								✔				
	KEELOQ® Evaluation Kit												✔

© 1997 Microchip Technology Inc.

17.0 ELECTRICAL CHARACTERISTICS

Absolute Maximum Ratings †

Ambient temperature under bias ..... -55˚C to +125˚C

Storage temperature ..... -65˚C to +150˚C

Voltage on any pin with respect to V_{SS} (except V_{DD}, $\overline{MCLR}$, and RA4) ..... -0.3V to (V_{DD} + 0.3V)

Voltage on V_{DD} with respect to V_{SS} ..... -0.3V to +7.5V

Voltage on $\overline{MCLR}$ with respect to V_{SS} ..... 0V to +14V

Voltage on RA4 with respect to Vss ..... 0V to +14V

Total power dissipation (Note 1) 1.0W

Maximum current out of V_{SS} pin ..... 300 mA

Maximum current into V_{DD} pin ..... 250 mA

Input clamp current, I_{IK} (V_I < 0 or V_I > V_{DD}) ..... ± 20 mA

Output clamp current, I_{OK} (V_O < 0 or V_O > V_{DD}) ..... ± 20 mA

Maximum output current sunk by any I/O pin ..... 10 mA

Maximum output current sourced by any I/O pin ..... 10 mA

Maximum current sunk by all Ports combined ..... 200 mA

Maximum current sourced by all Ports combined ..... 200 mA

Note 1: Power dissipation is calculated as follows: $P_{DIS} = V_{DD} \times \{I_{DD} - \sum I_{OH}\} + \sum \{(V_{DD} - V_{OH}) \times I_{OH}\} + \sum(V_{OI} \times I_{OL})$

† NOTICE: Stresses above those listed under “Absolute Maximum Ratings” may cause permanent damage to the device. This is a stress rating only and functional operation of the device at those or any other conditions above those indicated in the operation listings of this specification is not implied. Exposure to maximum rating conditions for extended periods may affect device reliability.

TABLE 17-1: CROSS REFERENCE OF DEVICE SPECS FOR OSCILLATOR CONFIGURATIONS AND FREQUENCIES OF OPERATION (COMMERCIAL DEVICES)

OSC	PIC16C923-04 PIC16C924-04	PIC16C923-08 PIC16C924-08	PIC16LC923-04 PIC16LC924-04	CL Devices
RC	V_{DD}: 4.0V to 6.0V I_{DD}: 5 mA max. at 5.5V I_{PD}: 21 µA max. at 4V Freq: 4 MHz max.	V_{DD}: 4.5V to 5.5V I_{DD}: 2.7 mA typ. at 5.5V I_{PD}: 1.5 µA typ. at 4V Freq: 4 MHz max.	V_{DD}: 2.5V to 6.0V I_{DD}: 3.8 mA max. at 3.0V I_{PD}: 5 µA max. at 3V Freq: 4 MHz max.	V_{DD}: 2.5V to 6.0V I_{DD}: 5 mA max. at 5.5V I_{PD}: 21 µA max. at 4V Freq: 4 MHz max.
XT	V_{DD}: 4.0V to 6.0V I_{DD}: 5 mA max. at 5.5V I_{PD}: 21 µA max. at 4V Freq: 4 MHz max.	V_{DD}: 4.5V to 5.5V I_{DD}: 2.7 mA typ. at 5.5V I_{PD}: 1.5 µA typ. at 4V Freq: 4 MHz max.	V_{DD}: 2.5V to 6.0V I_{DD}: 3.8 mA max. at 3.0V I_{PD}: 5 µA max. at 3V Freq: 4 MHz max.	V_{DD}: 2.5V to 6.0V I_{DD}: 5 mA max. at 5.5V I_{PD}: 21 µA max. at 4V Freq: 4 MHz max.
HS	V_{DD}: 4.5V to 5.5V I_{DD}: 3.5 mA typ. at 5.5V I_{PD}: 1.5 µA typ. at 4.5V Freq: 4 MHz max.	V_{DD}: 4.5V to 5.5V I_{DD}: 7 mA max. at 5.5V I_{PD}: 1.5 µA typ. at 4.5V Freq: 8 MHz max.	Do not use in HS mode	V_{DD}: 4.5V to 5.5V I_{DD}: 7 mA max. at 5.5V I_{PD}: 1.5 µA typ. at 4.5V Freq: 8 MHz max.
LP	V_{DD}: 4.0V to 6.0V I_{DD}: 22.5 µA typ. at 32 kHz, 4.0V I_{PD}: 1.5 µA typ. at 4.0V Freq: 200 kHz max.	Do not use in LP mode	V_{DD}: 2.5V to 6.0V I_{DD}: 30 µA max. at 32 kHz, 3.0V I_{PD}: 5 µA max. at 3.0V Freq: 200 kHz max.	V_{DD}: 2.5V to 6.0V I_{DD}: 30 µA max. at 32 kHz, 3.0V I_{PD}: 5 µA max. at 3.0V Freq: 200 kHz max.

The shaded sections indicate oscillator selections which are tested for functionality, but not for MIN/MAX specifications.
It is recommended that the user select the device type that ensures the specifications required.

© 1997 Microchip Technology Inc.

17.1 DC Characteristics: PIC16C923/924-04 (Commercial, Industrial) PIC16C923/924-08 (Commercial, Industrial)

DC CHARACTERISTICS			Standard Operating Conditions (unless otherwise stated) Operating temperature -40˚C ≤ TA ≤ +85˚C for industrial and 0˚C ≤ TA ≤ +70˚C for commercial				
Param No.	**Characteristic**	**Sym**	**Min**	**Typ†**	**Max**	**Units**	**Conditions**
D001 D001A	Supply Voltage	VDD	4.0 4.5	- -	6.0 5.5	V V	XT, RC and LP osc configuration HS osc configuration
D002*	RAM Data Retention Voltage (Note 1)	VDR	-	1.5	-	V	
D003	VDD start voltage to ensure internal Power-on Reset signal	VPOR	-	VSS	-	V	See Power-on Reset section for details
D004*	VDD rise rate to ensure internal Power-on Reset signal	SVDD	0.05	-	-	V/ms	(Note 6) See Power-on Reset section for details
D010	Supply Current (Note 2)	IDD	-	2.7	5	mA	XT and RC osc configuration FOSC = 4 MHz, VDD = 5.5V (Note 4)
D011			-	22.5	48	µA	LP osc configuration, FOSC = 32 kHz, VDD = 4.0V
D012			-	3.5	7	mA	HS osc configuration FOSC = 8 MHz, VDD = 5.5V
D020	Power-down Current (Note 3)	IPD	-	1.5	21	µA	VDD = 4.0V
	Module Differential Current (Note 5)						
D021	Watchdog Timer	ΔIWDT	-	6.0	20	µA	VDD = 4.0V
D022*	LCD Voltage Generation w/internal RC osc enabled	ΔILCDRC	-	40	55	µA	VDD = 4.0V (Note 7)
D024*	LCD Voltage Generation w/Timer1 @ 32.768 kHz	ΔILCDT1	-	33	60	µA	VDD = 4.0V (Note 7)
D025*	Timer1 oscillator	ΔIT1OSC	-	10.6	17	µA	VDD = 4.0V
D026*	A/D Converter	ΔIAD	-	1.0	-	µA	A/D on, not converting

* These parameters are characterized but not tested.

† Data in "Typ" column is at 5V, 25˚C unless otherwise stated. These parameters are for design guidance only and are not tested.

Note 1: This is the limit to which VDD can be lowered in SLEEP mode without losing RAM data.

2: The supply current is mainly a function of the operating voltage and frequency. Other factors such as I/O pin loading and switching rate, oscillator type, internal code execution pattern, and temperature also have an impact on the current consumption.
The test conditions for all IDD measurements in active operation mode are:
OSC1 = external square wave, from rail to rail; all I/O pins tristated, pulled to VDD
$\overline{\text{MCLR}}$ = VDD.

3: The power-down current in SLEEP mode does not depend on the oscillator type. Power-down current is measured with the part in SLEEP mode, with all I/O pins in hi-impedance state and tied to VDD and VSS.

4: For RC osc configuration, current through Rext is not included. The current through the resistor can be estimated by the formula Ir = VDD/2Rext (mA) with Rext in kOhm.

5: The Δ current is the additional current consumed when this peripheral is enabled. This current should be added to the base IDD or IPD measurement.

6: PWRT must be enabled for slow ramps.

7: ΔILCDT1 and ΔILCDRC includes the current consumed by the LCD Module and the voltage generation circuitry. This does not include current dissipated by the LCD panel.

© 1997 Microchip Technology Inc.

17.2 DC Characteristics: PIC16LC923/924-04 (Commercial, Industrial)

DC CHARACTERISTICS			Standard Operating Conditions (unless otherwise stated) Operating temperature -40˚C ≤ TA ≤ +85˚C for industrial and 0˚C ≤ TA ≤ +70˚C for commercial				
Param No.	**Characteristic**	**Sym**	**Min**	**Typ†**	**Max**	**Units**	**Conditions**
D001	Supply Voltage	VDD	2.5	-	6.0	V	LP, XT, RC osc configuration
D002*	RAM Data Retention Voltage (Note 1)	VDR	-	1.5	-	V	
D003	VDD start voltage to ensure internal Power-on Reset signal	VPOR	-	VSS	-	V	See Power-on Reset section for details
D004*	VDD rise rate to ensure internal Power-on Reset signal	SVDD	0.05	-	-	V/ms	(Note 6) See Power-on Reset section for details
D010	Supply Current (Note 2)	IDD	-	2.0	3.8	mA	XT and RC osc configuration FOSC = 4 MHz, VDD = 3.0V (Note 4)
D011			-	13.5	30	µA	LP osc configuration, FOSC = 32 kHz, VDD = 4.0V
D020	Power-down Current (Note 3)	IPD	-	0.9	5	µA	VDD = 3.0V
	Module Differential Current (Note 5)						
D021	Watchdog Timer	ΔIWDT	-	6.0	20	µA	VDD = 3.0V
D022*	LCD Voltage Generation w/internal RC osc enabled	ΔILCDRC	-	36	50	µA	VDD = 3.0V (Note 7)
D024*	LCD Voltage Generation w/Timer1 @ 32.768 kHz	ΔILCDT1	-	15	29	µA	VDD = 3.0V (Note 7)
D025*	Timer1 oscillator	ΔIT1OSC	-	3.1	6.5	µA	VDD = 3.0V
D026*	A/D Converter	ΔIAD	-	1.0	-	µA	A/D on, not converting

* These parameters are characterized but not tested.

† Data in "Typ" column is at 5V, 25˚C unless otherwise stated. These parameters are for design guidance only and are not tested.

Note 1: This is the limit to which VDD can be lowered in SLEEP mode without losing RAM data.

2: The supply current is mainly a function of the operating voltage and frequency. Other factors such as I/O pin loading and switching rate, oscillator type, internal code execution pattern, and temperature also have an impact on the current consumption.
The test conditions for all IDD measurements in active operation mode are:
OSC1 = external square wave, from rail to rail; all I/O pins tristated, pulled to VDD
$\overline{MCLR}$ = VDD.

3: The power-down current in SLEEP mode does not depend on the oscillator type. Power-down current is measured with the part in SLEEP mode, with all I/O pins in hi-impedance state and tied to VDD and VSS.

4: For RC osc configuration, current through Rext is not included. The current through the resistor can be estimated by the formula Ir = VDD/2Rext (mA) with Rext in kOhm.

5: The Δ current is the additional current consumed when this peripheral is enabled. This current should be added to the base IDD or IPD measurement.

6: PWRT must be enabled for slow ramps.

7: ΔILCDT1 and ΔILCDRC includes the current consumed by the LCD Module and the voltage generation circuitry. This does not include current dissipated by the LCD panel.

17.3 DC Characteristics: PIC16C923/924-04 (Commercial, Industrial) PIC16C923/924-08 (Commercial, Industrial) PIC16LC923/924-04 (Commercial, Industrial)

DC CHARACTERISTICS							Standard Operating Conditions (unless otherwise stated) Operating temperature -40˚C ≤ TA ≤ +85˚C for industrial and 0˚C ≤ TA ≤ +70˚C for commercial Operating voltage VDD range as described in DC spec
Param No.	**Characteristic**	**Sym**	**Min**	**Typ †**	**Max**	**Units**	**Conditions**
	Input Low Voltage						
	I/O ports	VIL					
D030	with TTL buffer		VSS	-	0.15VDD	V	For entire VDD range
			VSS	-	0.8V	V	4.5V ≤ VDD ≤ 5.5V
D031	with Schmitt Trigger buffer		VSS	-	0.2VDD	V	
D032	$\overline{\text{MCLR}}$, OSC1 (in RC mode)		VSS	-	0.2VDD	V	
D033	OSC1 (in XT, HS and LP)		VSS	-	0.3VDD	V	Note1
	Input High Voltage						
	I/O ports	VIH		-			
D040	with TTL buffer		2.0	-	VDD	V	4.5V ≤ VDD ≤ 5.5V
D040A			0.25VDD + 0.8V	-	VDD	V	For entire VDD range
D041	with Schmitt Trigger buffer		0.8VDD	-	VDD	V	
D042	$\overline{\text{MCLR}}$		0.8VDD	-	VDD	V	
D042A	OSC1 (XT, HS and LP)		0.7VDD	-	VDD	V	Note1
D043	OSC1 (in RC mode)		0.9VDD	-	VDD	V	
D070	PORTB weak pull-up current	IPURB	50	250	400	μA	VDD = 5V, VPIN = VSS
	Input Leakage Current (Notes 2, 3)						
D060	I/O ports	IIL	-	-	±1.0	μA	Vss ≤ VPIN ≤ VDD, Pin at hi-Z
D061	$\overline{\text{MCLR}}$, RA4/T0CKI		-	-	±5	μA	Vss ≤ VPIN ≤ VDD
D063	OSC1		-	-	±5	μA	Vss ≤ VPIN ≤ VDD, XT, HS and LP osc configuration
	Output Low Voltage						
D080	I/O ports	VOL	-	-	0.6	V	IOL = 4.0 mA, VDD = 4.5V
D083	OSC2/CLKOUT (RC osc mode)		-	-	0.6	V	IOL = 1.6 mA, VDD = 4.5V
	Output High Voltage						
D090	I/O ports (Note 3)	VOH	VDD - 0.7	-	-	V	IOH = -3.0 mA, VDD = 4.5V
D092	OSC2/CLKOUT (RC osc mode)		VDD - 0.7	-	-	V	IOH = -1.3 mA, VDD = 4.5V
	Capacitive Loading Specs on Output Pins						
D100*	OSC2 pin	COSC2	-	-	15	pF	In XT, HS and LP modes when external clock is used to drive OSC1.
D101*	All I/O pins and OSC2 (in RC)	CIO	-	-	50	pF	
D102*	SCL, SDA in I^2C mode	CB	-	-	400	pF	
D150*	Open -Drain High Voltage	VDD	-	-	14	V	RA4 pin

* These parameters are characterized but not tested.

† Data in "Typ" column is at 5V, 25°C unless otherwise stated. These parameters are for design guidance only and are not tested.

Note 1: In RC oscillator configuration, the OSC1/CLKIN pin is a Schmitt Trigger input. It is not recommended that the PIC16C9XX be driven with external clock in RC mode.

2: The leakage current on the $\overline{\text{MCLR}}$ pin is strongly dependent on the applied voltage level. The specified levels represent normal operating conditions. Higher leakage current may be measured at different input voltages.

3: Negative current is defined as current sourced by the pin.

© 1997 Microchip Technology Inc.

FIGURE 17-1: LCD VOLTAGE WAVEFORM

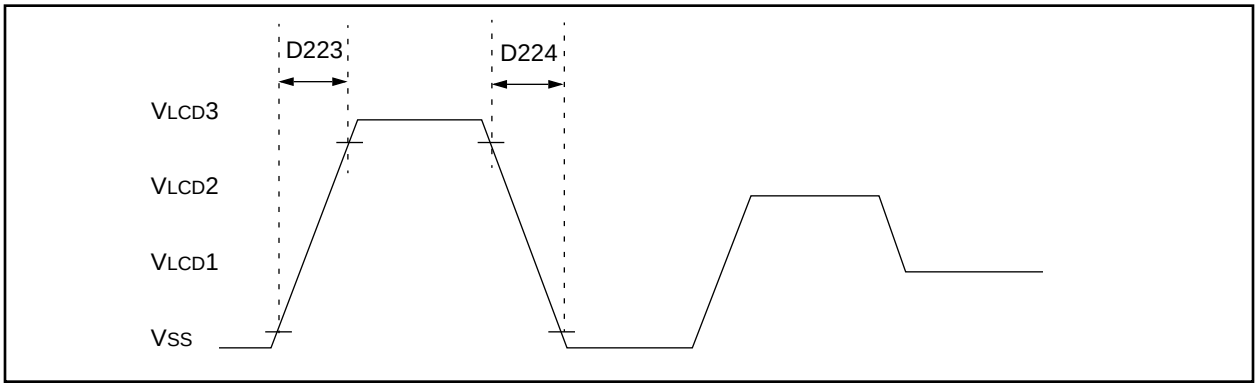

TABLE 17-2: LCD MODULE ELECTRICAL SPECIFICATIONS

Parameter No.	Sym	Characteristic	Min	Typ†	Max	Units	Conditions
D200	VLCD3	LCD Voltage on pin VLCD3	VDD - 0.3	—	Vss + 7.0	V	
D201	VLCD2	LCD Voltage on pin VLCD2	—	—	VLCD3	V	
D202	VLCD1	LCD Voltage on pin VLCD1	—	—	VDD	V	
D220*	VOH	Output High Voltage	Max VLCDN - 0.1	—	Max VLCDN	V	COM outputs IOH = 25 µA SEG outputs IOH = 3 µA
D221*	VOL	Output Low Voltage	Min VLCDN	—	Min VLCDN + 0.1	V	COM outputs IOL = 25 µA SEG outputs IOL = 3 µA
D222*	FLCDRC	LCDRC Oscillator Frequency	5	15	50	kHz	VDD = 5V, -40˚C to +85˚C
D223*	TrLCD	Output Rise Time	—	—	200	µs	COM outputs Cload = 5,000 pF SEG outputs Cload = 500 pF VDD = 5.0V, T = 25°C
D224*	TfLCD	Output Fall Time (1)	—	—	200	µs	COM outputs Cload = 5,000 pF SEG outputs Cload = 500 pF VDD = 5.0V, T = 25°C

* These parameters are characterized but not tested.

† Data in “Typ” column is at 5V, 25°C unless otherwise stated. These parameters are for design guidance only and are not tested.

(1) 0 ohm source impedance at VLCD.

TABLE 17-3: VLCD CHARGE PUMP ELECTRICAL SPECIFICATIONS

Parameter No.	Symbol	Characteristic		Min	Typ	Max	Units	Conditions
D250*	IVADJ	VLCDADJ regulated current output		—	10	—	µA	
D252*	Δ IVADJ/Δ VDD	VLCDADJ current VDD Rejection		—	—	0.1/1	µA/V	
D265*	VVADJ	VLCDADJ voltage limits	PIC16**C**92X	1.0	—	2.3	V	
			PIC16**LC**92X	1.0		VDD - 0.7V	V	VDD < 3V

* These parameters are characterized but not tested.

Note 1: For design guidance only.

17.4 Timing Parameter Symbology

The timing parameter symbols have been created following one of the following formats:

1. TppS2ppS
2. TppS
3. TCC:ST (I²C specifications only)
4. Ts (I²C specifications only)

T			
F	Frequency	T	Time

Lowercase letters (pp) and their meanings:

pp			
cc	CCP1	osc	OSC1
ck	CLKOUT	rd	$\overline{RD}$
cs	$\overline{CS}$	rw	$\overline{RD}$ or $\overline{WR}$
di	SDI	sc	SCK
do	SDO	ss	$\overline{SS}$
dt	Data in	t0	T0CKI
io	I/O port	t1	T1CKI
mc	$\overline{MCLR}$	wr	$\overline{WR}$

Uppercase letters and their meanings:

S			
F	Fall	P	Period
H	High	R	Rise
I	Invalid (Hi-impedance)	V	Valid
L	Low	Z	Hi-impedance
I²C only			
AA	output access	High	High
BUF	Bus free	Low	Low

TCC:ST (I²C specifications only)

CC			
HD	Hold	SU	Setup
ST			
DAT	DATA input hold	STO	STOP condition
STA	START condition		

© 1997 Microchip Technology Inc.

FIGURE 17-2: LOAD CONDITIONS

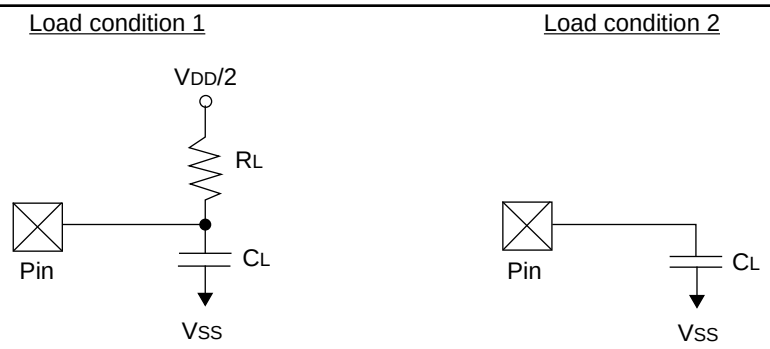

R_L = 464Ω

C_L = 50 pF for all pins except OSC2 unless otherwise noted.

15 pF for OSC2 output

17.5 Timing Diagrams and Specifications

FIGURE 17-3: EXTERNAL CLOCK TIMING

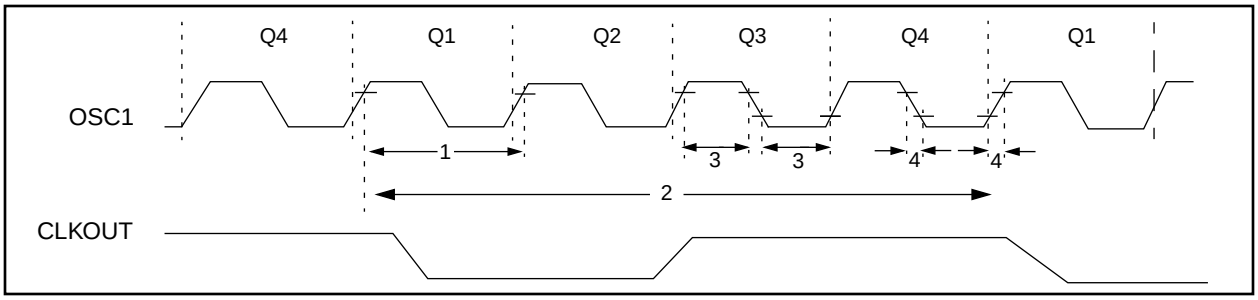

TABLE 17-4: EXTERNAL CLOCK TIMING REQUIREMENTS

Parameter No.	Sym	Characteristic	Min	Typ†	Max	Units	Conditions
	Fosc	**External CLKIN Frequency (Note 1)**	DC	—	4	MHz	XT and RC osc mode
			DC	—	8	MHz	HS osc mode
			DC	—	200	kHz	LP osc mode
		Oscillator Frequency (Note 1)	DC	—	4	MHz	RC osc mode
			0.1	—	4	MHz	XT osc mode
			4	—	8	MHz	HS osc mode
			5	—	200	kHz	LP osc mode
1	Tosc	**External CLKIN Period (Note 1)**	250	—	—	ns	XT and RC osc mode
			125	—	—	ns	HS osc mode
			5	—	—	µs	LP osc mode
		Oscillator Period (Note 1)	250	—	—	ns	RC osc mode
			250	—	10,000	ns	XT osc mode
			125	—	250	ns	HS osc mode
			5	—	—	µs	LP osc mode
2	TCY	**Instruction Cycle Time (Note 1)**	500	—	DC	ns	TCY = 4/FOSC
3	TosL, TosH	**External Clock in (OSC1) High or Low Time**	50	—	—	ns	XT oscillator
			2.5	—	—	µs	LP oscillator
			10	—	—	ns	HS oscillator
4	TosR, TosF	**External Clock in (OSC1) Rise or Fall Time**	—	—	25	ns	XT oscillator
			—	—	50	ns	LP oscillator
			—	—	15	ns	HS oscillator

† Data in "Typ" column is at 5V, 25˚C unless otherwise stated. These parameters are for design guidance only and are not tested.

Note 1: Instruction cycle period (TCY) equals four times the input oscillator time-base period. All specified values are based on characterization data for that particular oscillator type under standard operating conditions with the device executing code. Exceeding these specified limits may result in an unstable oscillator operation and/or higher than expected current consumption. All devices are tested to operate at "min." values with an external clock applied to the OSC1/CLKIN pin. When an external clock input is used, the "Max." cycle time limit is "DC" (no clock) for all devices.

© 1997 Microchip Technology Inc.

FIGURE 17-4: CLKOUT AND I/O TIMING

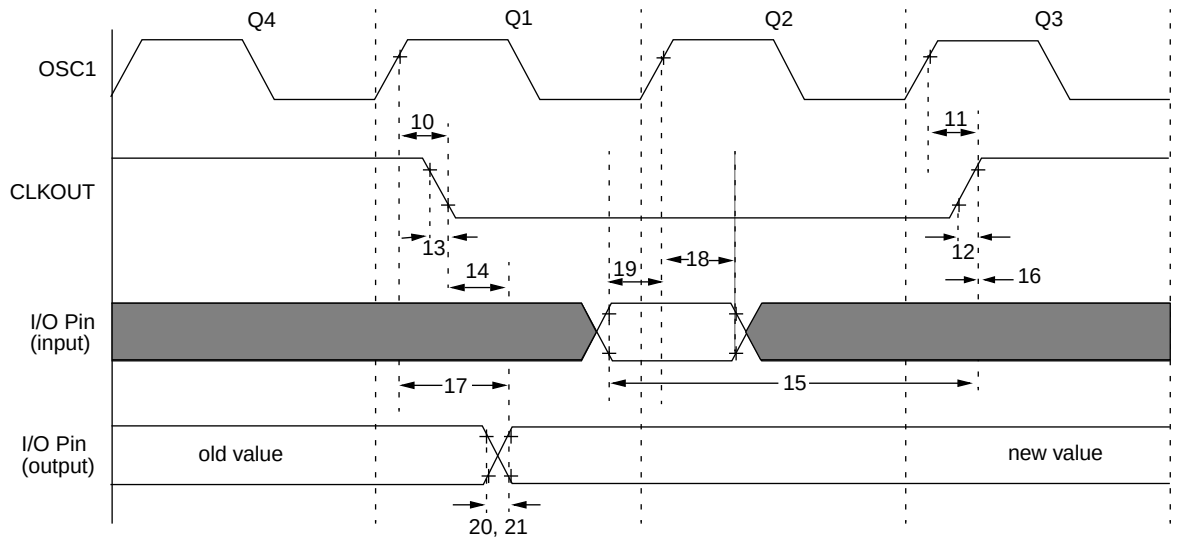

Refer to Figure 17-2 for load conditions.

TABLE 17-5: CLKOUT AND I/O TIMING REQUIREMENTS

Parameter No.	Sym	Characteristic		Min	Typ†	Max	Units	Conditions
10*	TosH2ckL	OSC1↑ to CLKOUT↓		—	75	200	ns	Note 1
11*	TosH2ckH	OSC1↑ to CLKOUT↑		—	75	200	ns	Note 1
12*	TckR	CLKOUT rise time		—	35	100	ns	Note 1
13*	TckF	CLKOUT fall time		—	35	100	ns	Note 1
14*	TckL2ioV	CLKOUT ↓ to Port out valid		—	—	0.5TCY + 20	ns	Note 1
15*	TioV2ckH	Port in valid before CLKOUT ↑		Tosc + 200	—	—	ns	Note 1
16*	TckH2ioI	Port in hold after CLKOUT ↑		0	—	—	ns	Note 1
17*	TosH2ioV	OSC1↑ (Q1 cycle) to Port out valid		—	50	150	ns	
18*	TosH2ioI	OSC1↑ (Q2 cycle) to Port input invalid (I/O in hold time)	PIC16**C**923/924	100	—	—	ns	
			PIC16**LC**923/924	200	—	—	ns	
19*	TioV2osH	Port input valid to OSC1↑ (I/O in setup time)		0	—	—	ns	
20*	TioR	Port output rise time	PIC16**C**923/924	—	10	40	ns	
			PIC16**LC**923/924	—	—	80	ns	
21*	TioF	Port output fall time	PIC16**C**923/924	—	10	40	ns	
			PIC16**LC**923/924	—	—	80	ns	
22††*	Tinp	INT pin high or low time		TCY	—	—	ns	
23††*	Trbp	RB7:RB4 change INT high or low time		TCY	—	—	ns	

* These parameters are characterized but not tested.

† Data in "Typ" column is at 5V, 25˚C unless otherwise stated. These parameters are for design guidance only and are not tested.

†† These parameters are asynchronous events not related to any internal clock edges.

Note 1: Measurements are taken in RC Mode where CLKOUT output is 4 x TOSC.

FIGURE 17-5: RESET, WATCHDOG TIMER, OSCILLATOR START-UP TIMER AND POWER-UP TIMER TIMING

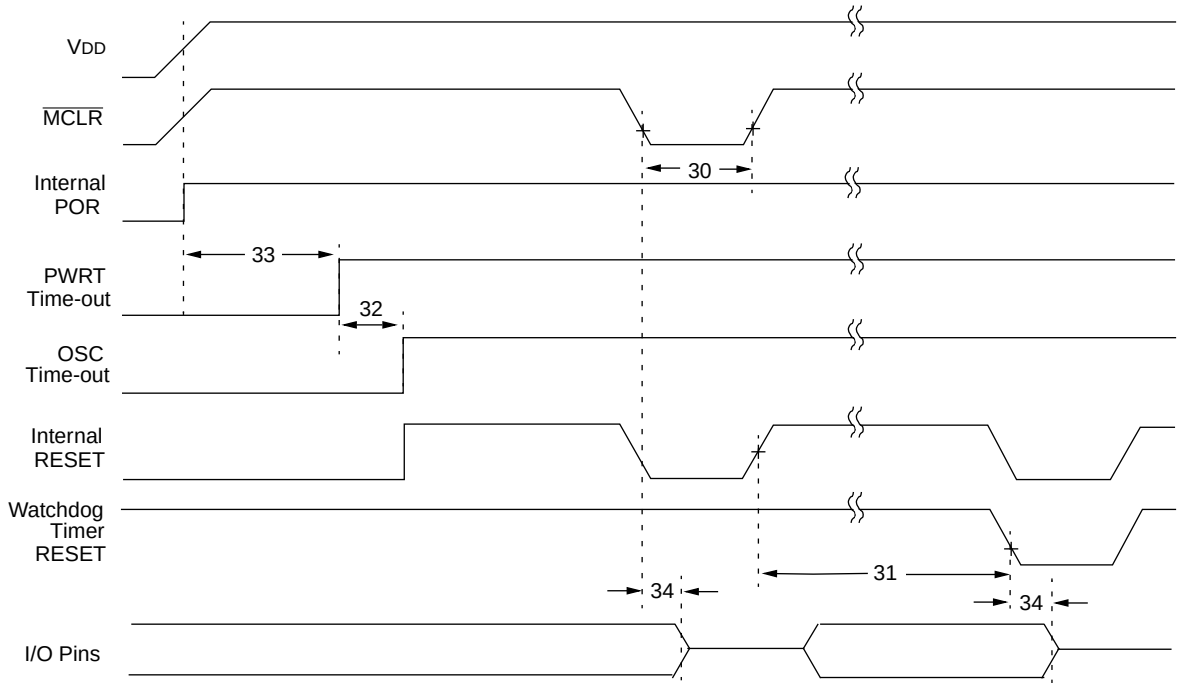

Refer to Figure 17-2 for load conditions.

TABLE 17-6: RESET, WATCHDOG TIMER, OSCILLATOR START-UP TIMER AND POWER-UP TIMER REQUIREMENTS

Parameter No.	Sym	Characteristic	Min	Typ†	Max	Units	Conditions
30	TmcL	$\overline{\text{MCLR}}$ Pulse Width (low)	2	—	—	µs	
31*	Twdt	Watchdog Timer Time-out Period (No Prescaler)	7	18	33	ms	VDD = 5V, -40˚C to +85˚C
32	Tost	Oscillation Start-up Timer Period	—	1024TOSC	—	—	TOSC = OSC1 period
33*	Tpwrt	Power-up Timer Period	28	72	132	ms	VDD = 5V, -40˚C to +85˚C
34	TIOZ	I/O Hi-impedance from $\overline{\text{MCLR}}$ Low or Watchdog Timer Reset	—	—	2.1	µs	

* These parameters are characterized but not tested.

† Data in "Typ" column is at 5V, 25˚C unless otherwise stated. These parameters are for design guidance only and are not tested.

© 1997 Microchip Technology Inc.

FIGURE 17-6: TIMER0 AND TIMER1 EXTERNAL CLOCK TIMINGS

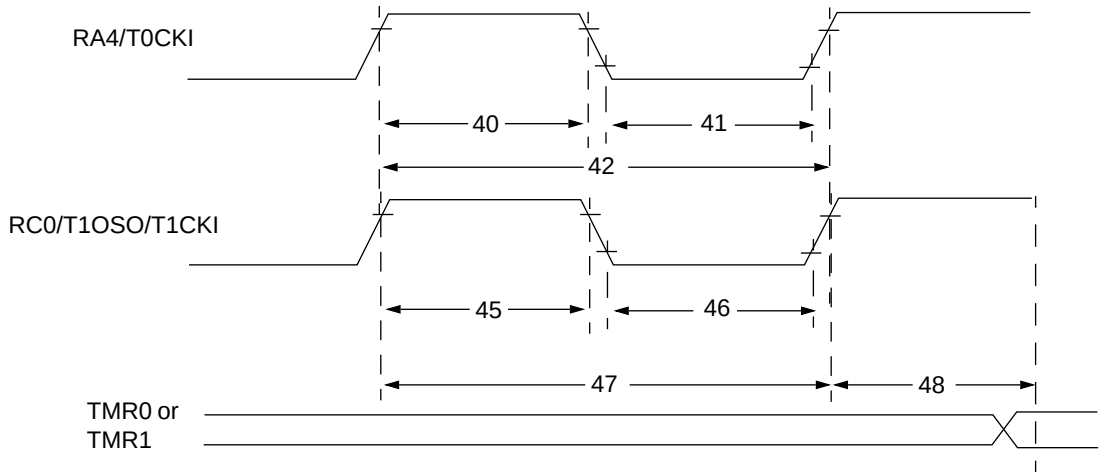

Refer to Figure 17-2 for load conditions.

TABLE 17-7: TIMER0 AND TIMER1 EXTERNAL CLOCK REQUIREMENTS

Param No.	Sym	Characteristic			Min	Typ†	Max	Units	Conditions
40*	Tt0H	T0CKI High Pulse Width		No Prescaler	0.5TCY + 20	—	—	ns	Must also meet parameter 42
				With Prescaler	10	—	—	ns	
41*	Tt0L	T0CKI Low Pulse Width		No Prescaler	0.5TCY + 20	—	—	ns	Must also meet parameter 42
				With Prescaler	10	—	—	ns	
42*	Tt0P	T0CKI Period		No Prescaler	TCY + 40	—	—	ns	
				With Prescaler	Greater of: 20 or TCY + 40 / N	—	—	ns	N = prescale value (2, 4, ..., 256)
45*	Tt1H	T1CKI High Time	Synchronous, Prescaler = 1		0.5TCY + 20	—	—	ns	Must also meet parameter 47
			Synchronous, Prescaler = 2,4,8	PIC16**C**923/924	15	—	—	ns	
				PIC16**LC**923/924	25	—	—	ns	
			Asynchronous	PIC16**C**923/924	30	—	—	ns	
				PIC16**LC**923/924	50	—	—	ns	
46*	Tt1L	T1CKI Low Time	Synchronous, Prescaler = 1		0.5TCY + 20	—	—	ns	Must also meet parameter 47
			Synchronous, Prescaler = 2,4,8	PIC16**C**923/924	15	—	—	ns	
				PIC16**LC**923/924	25	—	—	ns	
			Asynchronous	PIC16**C**923/924	30	—	—	ns	
				PIC16**LC**923/924	50	—	—	ns	
47*	Tt1P	T1CKI input period	Synchronous	PIC16**C**923/924	Greater of: 30 OR TCY + 40 / N	—	—	ns	N = prescale value (1, 2, 4, 8)
				PIC16**LC**923/924	Greater of: 50 OR TCY + 40 / N				N = prescale value (1, 2, 4, 8)
			Asynchronous	PIC16**C**923/924	60	—	—	ns	
				PIC16**LC**923/924	100	—	—	ns	
	Ft1	Timer1 oscillator input frequency range (oscillator enabled by setting bit T1OSCEN)			DC	—	200	kHz	
48	TCKEZtmr1	Delay from external clock edge to timer increment			2Tosc	—	7Tosc	—	

* These parameters are characterized but not tested.

† Data in "Typ" column is at 5V, 25˚C unless otherwise stated. These parameters are for design guidance only and are not tested.

FIGURE 17-7: CAPTURE/COMPARE/PWM TIMINGS

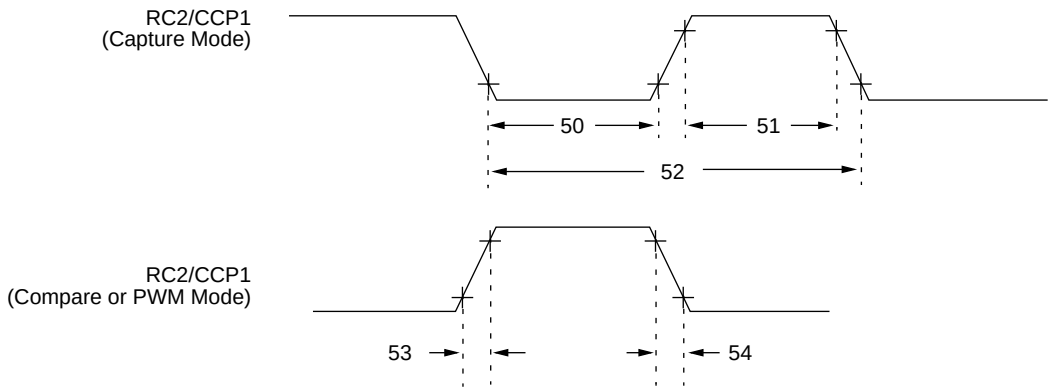

Refer to Figure 17-2 for load conditions.

TABLE 17-8: CAPTURE/COMPARE/PWM REQUIREMENTS

Parameter No.	Sym	Characteristic			Min	Typ†	Max	Units	Conditions
50*	TccL	Input Low Time	No Prescaler		0.5TCY + 20	—	—	ns	
			With Prescaler	PIC16**C**923/924	10	—	—	ns	
				PIC16**LC**923/924	20	—	—	ns	
51*	TccH	Input High Time	No Prescaler		0.5TCY + 20	—	—	ns	
			With Prescaler	PIC16**C**923/924	10	—	—	ns	
				PIC16**LC**923/924	20	—	—	ns	
52*	TccP	Input Period			$\frac{3T_{CY} + 40}{N}$	—	—	ns	N = prescale value (1,4 or 16)
53*	TccR	Output Rise Time		PIC16**C**923/924	—	10	25	ns	
				PIC16**LC**923/924	—	25	45	ns	
54*	TccF	Output Fall Time		PIC16**C**923/924	—	10	25	ns	
				PIC16**LC**923/924	—	25	45	ns	

* These parameters are characterized but not tested.

† Data in "Typ" column is at 5V, 25˚C unless otherwise stated. These parameters are for design guidance only and are not tested.

© 1997 Microchip Technology Inc.

FIGURE 17-8: SPI MASTER MODE TIMING (CKE = 0)

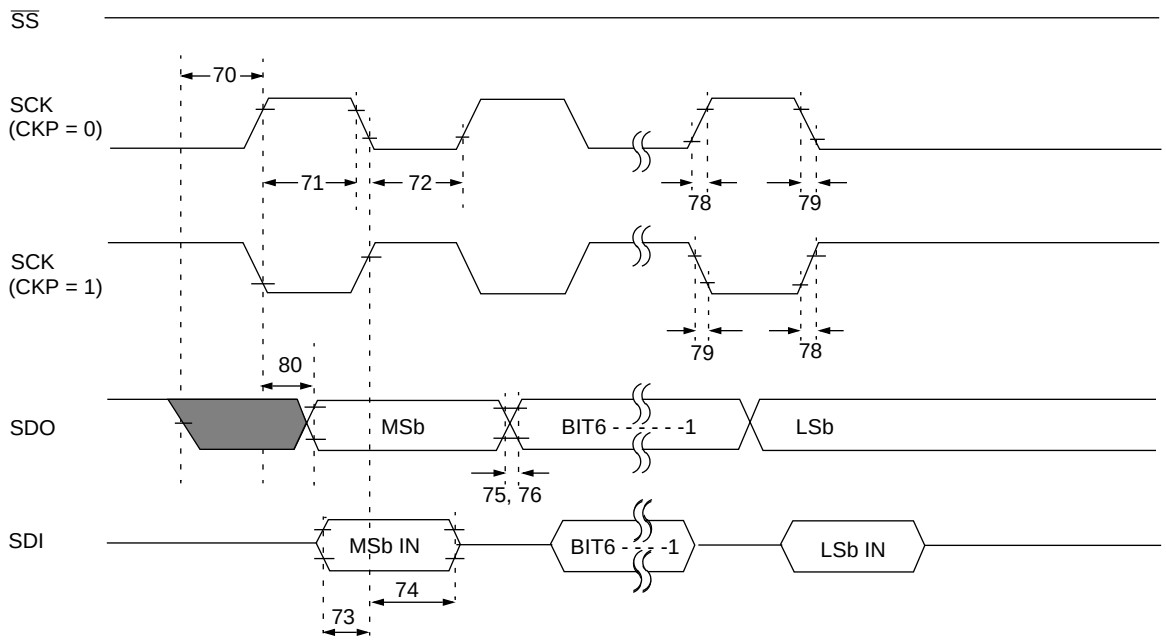

Refer to Figure 17-2 for load conditions.

FIGURE 17-9: SPI MASTER MODE TIMING (CKE = 1)

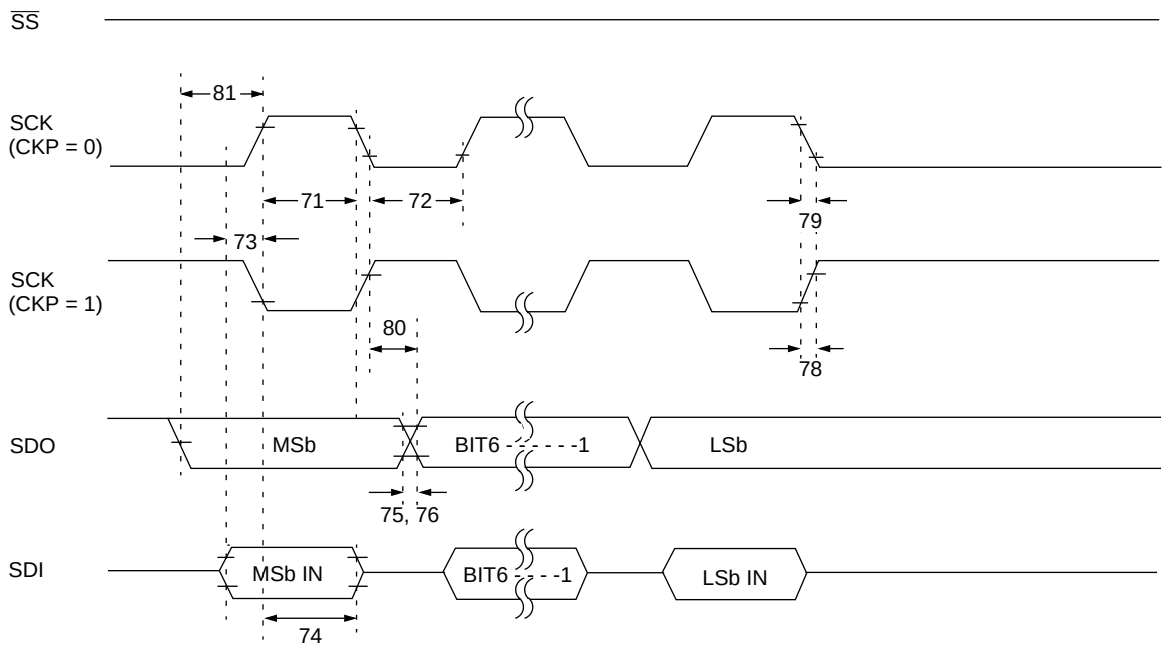

Refer to Figure 17-2 for load conditions.

FIGURE 17-10:SPI SLAVE MODE TIMING (CKE = 0)

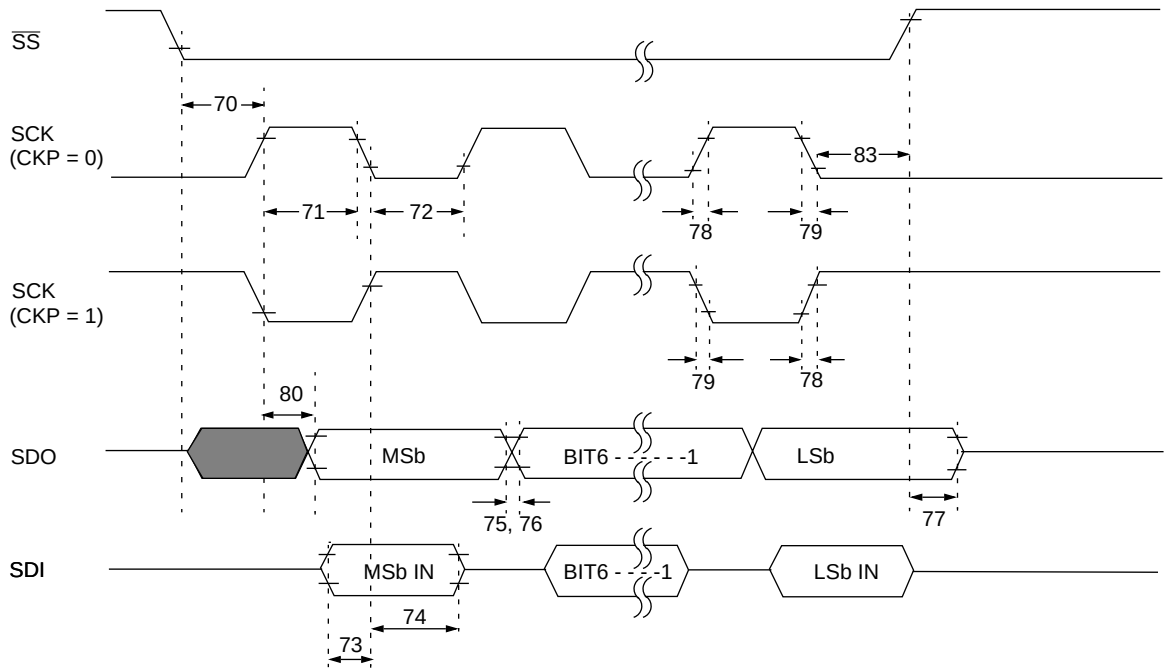

Refer to Figure 17-2 for load conditions.

FIGURE 17-11:SPI SLAVE MODE TIMING (CKE = 1)

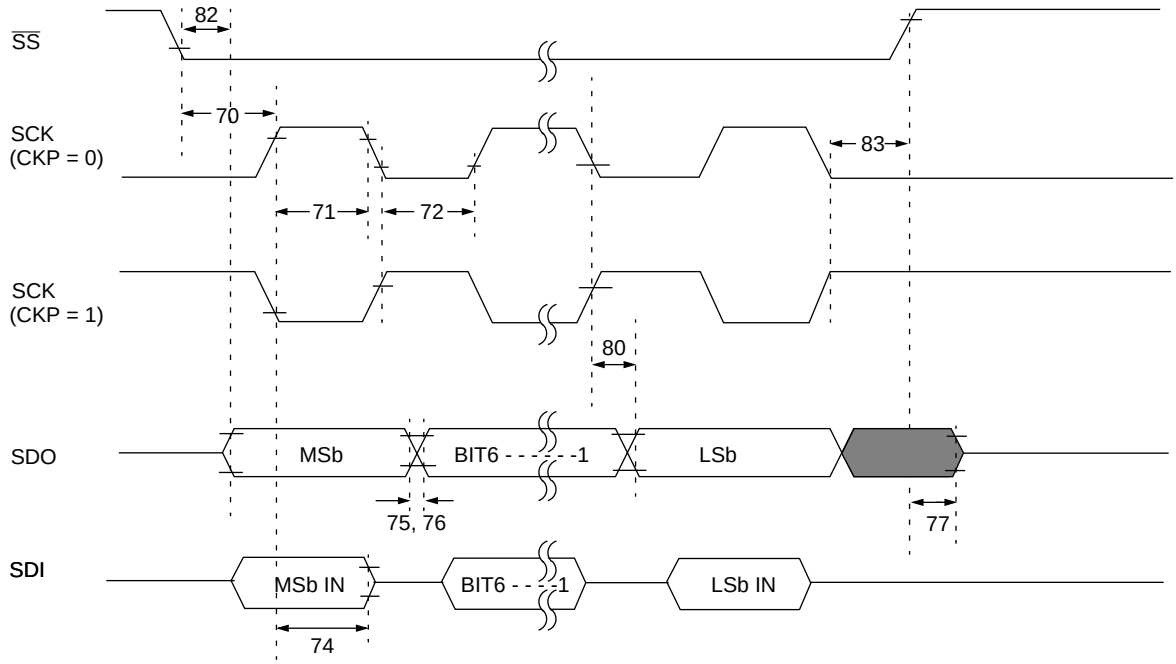

Refer to Figure 17-2 for load conditions.

© 1997 Microchip Technology Inc.

TABLE 17-9: SPI MODE REQUIREMENTS

Param No.	Sym	Characteristic		Min	Typ†	Max	Units	Conditions
70*	TssL2scH, TssL2scL	$\overline{SS}$↓ to SCK↓ or SCK↑ input		TCY	—	—	ns	
71*	TscH	SCK input high time (slave mode)	Continuous	1.25TCY + 30	—	—	ns	
71A*			Single Byte	40	—	—	ns	
72*	TscL	SCK input low time (slave mode)	Continuous	1.25TCY + 30	—	—	ns	
72A*			Single Byte	40				
73*	TdiV2scH, TdiV2scL	Setup time of SDI data input to SCK edge		50	—	—	ns	
74*	TscH2diL, TscL2diL	Hold time of SDI data input to SCK edge		50	—	—	ns	
75*	TdoR	SDO data output rise time		—	10	25	ns	
76*	TdoF	SDO data output fall time		—	10	25	ns	
77*	TssH2doZ	$\overline{SS}$↑ to SDO output hi-impedance		10	—	50	ns	
78*	TscR	SCK output rise time (master mode)		—	10	25	ns	
79*	TscF	SCK output fall time (master mode)		—	10	25	ns	
80*	TscH2doV, TscL2doV	SDO data output valid after SCK edge		—	—	50	ns	
81*	TdoV2scH, TdoV2scL	SDO data output setup to SCK edge		TCY	—	—	ns	
82*	TssL2doV	SDO data output valid after $\overline{SS}$↓ edge		—	—	50	ns	
83*	TscH2ssH, TscL2ssH	$\overline{SS}$ ↑ after SCK edge		1.5TCY + 40	—	—	ns	
84*	Tb2b	Delay between consecutive bytes		1.5TCY + 40	—	—	ns	

* Characterized but not tested.

† Data in "Typ" column is at 5V, 25˚C unless otherwise stated. These parameters are for design guidance only and are not tested.

FIGURE 17-12: I²C BUS START/STOP BITS TIMING

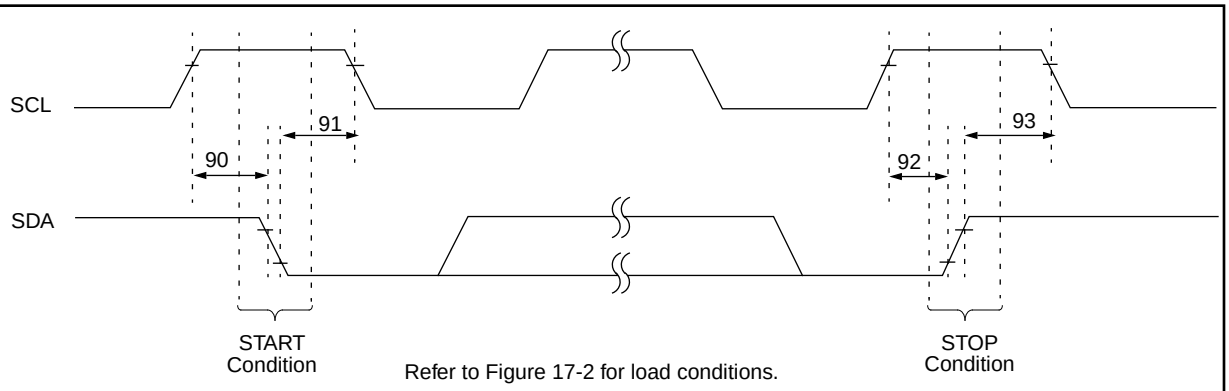

TABLE 17-10: I²C BUS START/STOP BITS REQUIREMENTS

Parameter No.	Sym	Characteristic		Min	Typ	Max	Units	Conditions
90*	TSU:STA	START condition Setup time	100 kHz mode	4700	—	—	ns	Only relevant for repeated START condition
91*	THD:STA	START condition Hold time	100 kHz mode	4000	—	—	ns	After this period the first clock pulse is generated
92*	TSU:STO	STOP condition Setup time	100 kHz mode	4700	—	—	ns	
93*	THD:STO	STOP condition Hold time	100 kHz mode	4000	—	—	ns	

* Characterized but not tested.

© 1997 Microchip Technology Inc.

FIGURE 17-13: I²C BUS DATA TIMING

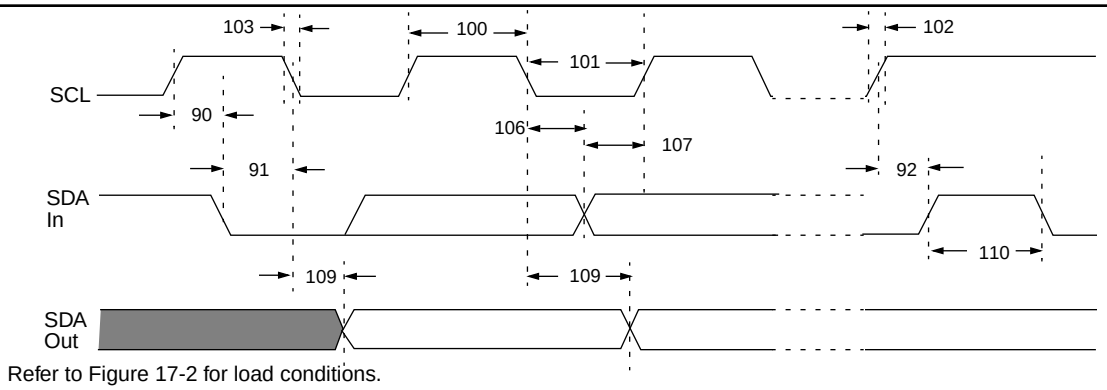

Refer to Figure 17-2 for load conditions.

TABLE 17-11: I²C BUS DATA REQUIREMENTS

Parameter No.	Sym	Characteristic		Min	Max	Units	Conditions
100*	THIGH	Clock high time	100 kHz mode	4.0	—	µs	Device must operate at a minimum of 1.5 MHz
			SSP Module	1.5TCY	—		
101*	TLOW	Clock low time	100 kHz mode	4.7	—	µs	Device must operate at a minimum of 1.5 MHz
			SSP Module	1.5TCY	—		
102*	TR	SDA and SCL rise time	100 kHz mode	—	1000	ns	
103*	TF	SDA and SCL fall time	100 kHz mode	—	300	ns	
90*	TSU:STA	START condition setup time	100 kHz mode	4.7	—	µs	Only relevant for repeated START condition
91*	THD:STA	START condition hold time	100 kHz mode	4.0	—	µs	After this period the first clock pulse is generated
106*	THD:DAT	Data input hold time	100 kHz mode	0	—	ns	
107*	TSU:DAT	Data input setup time	100 kHz mode	250	—	ns	
92*	TSU:STO	STOP condition setup time	100 kHz mode	4.7	—	µs	
109*	TAA	Output valid from clock	100 kHz mode	—	3500	ns	Note 1
110*	TBUF	Bus free time	100 kHz mode	4.7	—	µs	Time the bus must be free before a new transmission can start
D102*	Cb	Bus capacitive loading		—	400	pF	

* Characterized but not tested.

Note 1: As a transmitter, the device must provide this internal minimum delay time to bridge the undefined region (min. 300 ns) of the falling edge of SCL to avoid unintended generation of START or STOP conditions.

© 1997 Microchip Technology Inc.

TABLE 17-12: A/D CONVERTER CHARACTERISTICS: PIC16C924-04 (COMMERCIAL, INDUSTRIAL) PIC16LC924-04 (COMMERCIAL, INDUSTRIAL)

Param No.	Sym	Characteristic		Min	Typ†	Max	Units	Conditions
A01	NR	Resolution		—	—	8-bits	bit	VREF = VDD = 5.12V, VSS ≤ VAIN ≤ VREF
A02	EABS	Total Absolute error		—	—	< ± 1	LSb	VREF = VDD = 5.12V, VSS ≤ VAIN ≤ VREF
A03	EIL	Integral linearity error		—	—	< ± 1	LSb	VREF = VDD = 5.12V, VSS ≤ VAIN ≤ VREF
A04	EDL	Differential linearity error		—	—	< ± 1	LSb	VREF = VDD = 5.12V, VSS ≤ VAIN ≤ VREF
A05	EFS	Full scale error		—	—	< ± 1	LSb	VREF = VDD = 5.12V, VSS ≤ VAIN ≤ VREF
A06	EOFF	Offset error		—	—	< ± 1	LSb	VREF = VDD = 5.12V, VSS ≤ VAIN ≤ VREF
A10	—	Monotonicity		—	guaranteed	—	—	VSS ≤ VAIN ≤ VREF
A20	VREF	Reference voltage		3.0V	—	VDD + 0.3	V	
A25	VAIN	Analog input voltage		VSS - 0.3	—	VREF + 0.3	V	
A30	ZAIN	Recommended impedance of analog voltage source		—	—	10.0	kΩ	
A40	IAD	A/D conversion current (VDD)	PIC16**C**924	—	180	—	μA	Average current consumption when A/D is on. (Note 1)
			PIC16**LC**924	—	90	—	μA	
A50	IREF	VREF input current (Note 2)		10	—	1000	μA	During VAIN acquisition. Based on differential of VHOLD to VAIN to charge CHOLD, see Section 12.1.
				—	—	10	μA	During A/D Conversion cycle

* These parameters are characterized but not tested.

† Data in "Typ" column is at 5V, 25°C unless otherwise stated. These parameters are for design guidance only and are not tested.

Note 1: When A/D is off, it will not consume any current other than minor leakage current. The power-down current spec includes any such leakage from the A/D module.

2: VREF current is from RA3 pin or VDD pin, whichever is selected as reference input.

© 1997 Microchip Technology Inc.

FIGURE 17-14: A/D CONVERSION TIMING

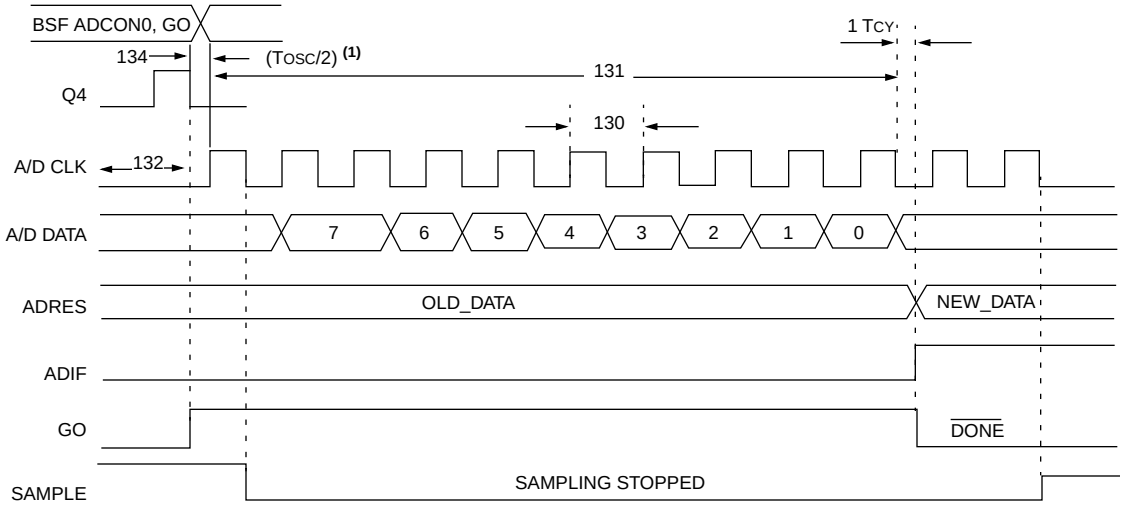

Note 1: If the A/D clock source is selected as RC, a time of TCY is added before the A/D clock starts. This allows the SLEEP instruction to be executed.

TABLE 17-13: A/D CONVERSION REQUIREMENTS

Param No.	Sym	Characteristic		Min	Typ†	Max	Units	Conditions
130	TAD	A/D clock period	PIC16**C**924	1.6	—	—	µs	TOSC based, VREF ≥ 3.0V
			PIC16**LC**924	2.0	—	—	µs	TOSC based, VREF full range
			PIC16**C**924	2.0	4.0	6.0	µs	A/D RC Mode
			PIC16**LC**924	3.0	6.0	9.0	µs	A/D RC Mode
131	TCNV	Conversion time (not including S/H time) (Note 1)		—	9.5	—	TAD	
132	TACQ	Acquisition time		Note 2	20	—	µs	
				5*	—	—	µs	The minimum time is the amplifier settling time. This may be used if the "new" input voltage has not changed by more than 1 LSb (i.e., 20.0 mV @ 5.12V) from the last sampled voltage (as stated on CHOLD).
134	TGO	Q4 to A/D clock start		—	TOSC/2 §	—	—	If the A/D clock source is selected as RC, a time of TCY is added before the A/D clock starts. This allows the SLEEP instruction to be executed.
135	TSWC	Switching from convert → sample time		1.5 §	—	—	TAD	

* These parameters are characterized but not tested.

† Data in "Typ" column is at 5V, 25°C unless otherwise stated. These parameters are for design guidance only and are not tested.

§ This specification ensured by design.

Note 1: ADRES register may be read on the following TCY cycle.

2: See Section 12.1 for min conditions.

NOTES:

© 1997 Microchip Technology Inc.

18.0 DC AND AC CHARACTERISTICS GRAPHS AND TABLES

The graphs and tables provided in this section are for design guidance and are not tested or guaranteed.

In some graphs or tables the data presented are outside specified operating range (i.e., outside specified VDD range). This is for information only and devices are guaranteed to operate properly only within the specified range.

Note:	The data presented in this section is a statistical summary of data collected on units from different lots over a period of time and process characterization samples. 'Typical' represents the mean of the distribution at, 25°C, while 'max' or 'min' represents (mean +3σ) and (mean -3σ) respectively where σ is standard deviation.

FIGURE 18-1: TYPICAL IPD VS. VDD (WDT DISABLED, RC MODE @ 25°C)

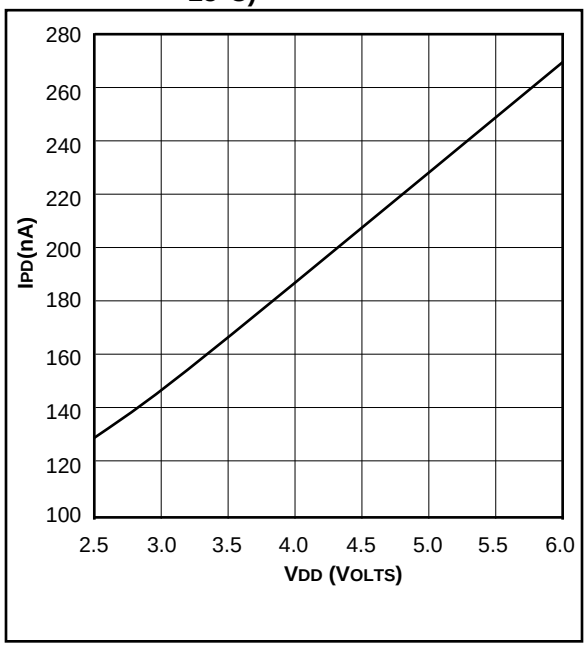

FIGURE 18-2: MAXIMUM IPD VS. VDD (WDT DISABLED, RC MODE -40°C TO +85°C)

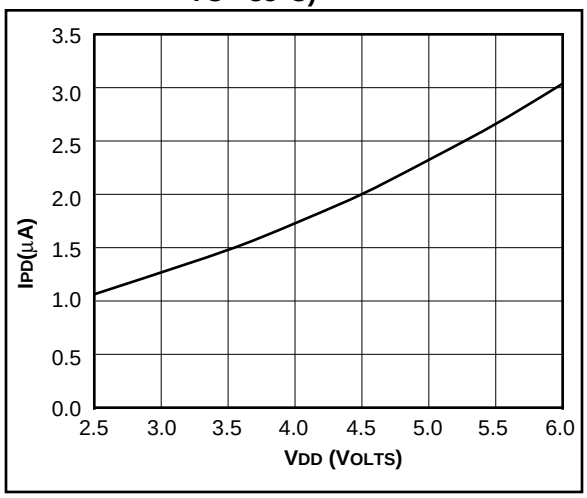

FIGURE 18-3: TYPICAL IPD VS. VDD (WDT ENABLED, RC MODE @ 25°C)

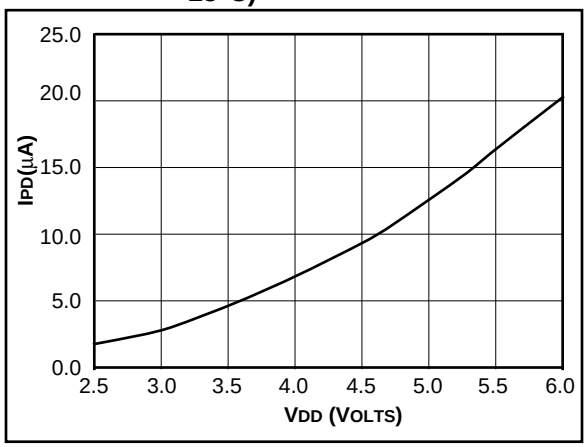

FIGURE 18-4: MAXIMUM IPD VS. VDD (WDT ENABLED, RC MODE -40°C TO +85°C)

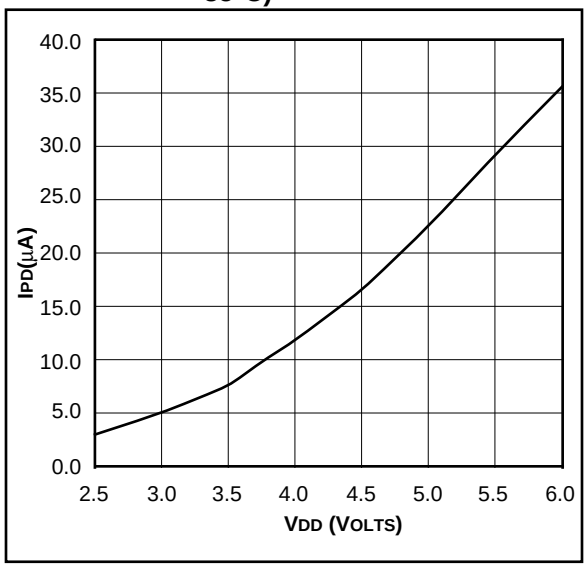

© 1997 Microchip Technology Inc.

FIGURE 18-5: TYPICAL IPD vs. VDD (LCD ON(1), INTERNAL RC(2), RC MODE @ 25°C)

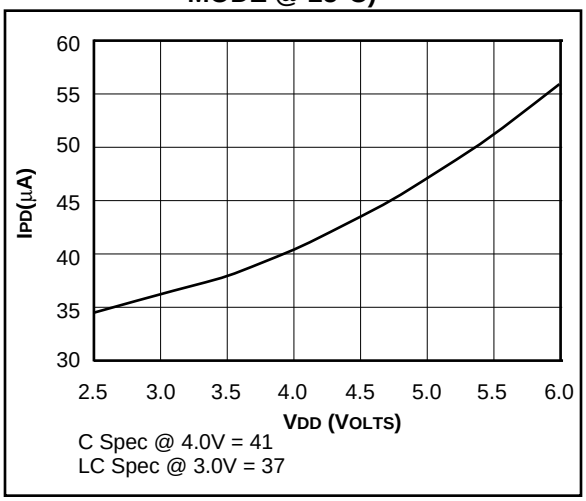

FIGURE 18-6: MAXIMUM IPD vs. VDD (LCD ON (32 kHz(1)), INTERNAL RC (32 kHz(2)), RC MODE -40°C TO +85°C)

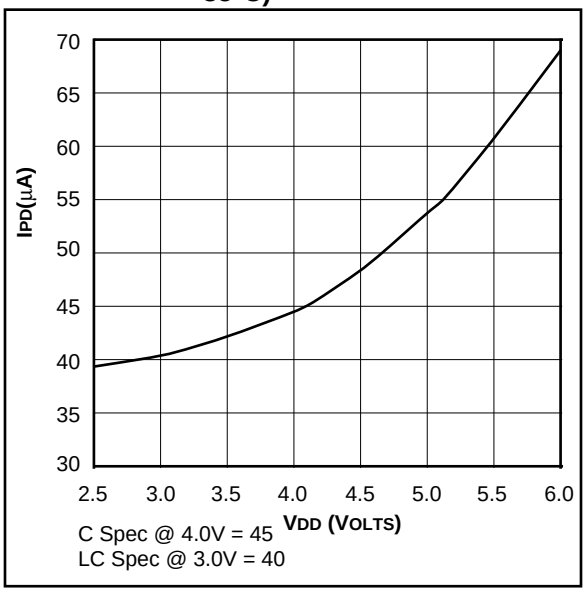

FIGURE 18-7: TYPICAL IPD vs. VDD (LCD ON(1), TIMER1 (32 kHz(2)), RC MODE @ 25°C)

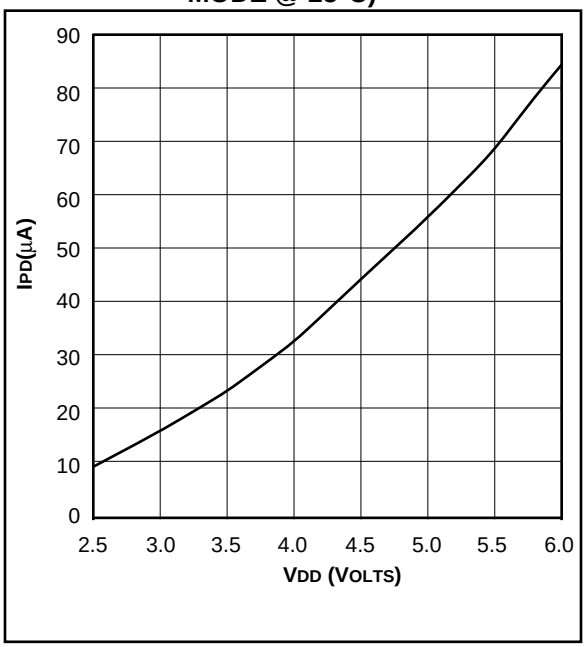

FIGURE 18-8: MAXIMUM IPD vs. VDD (LCD ON(1), TIMER1(32 kHz(2)), RC MODE -40°C TO +85°C)

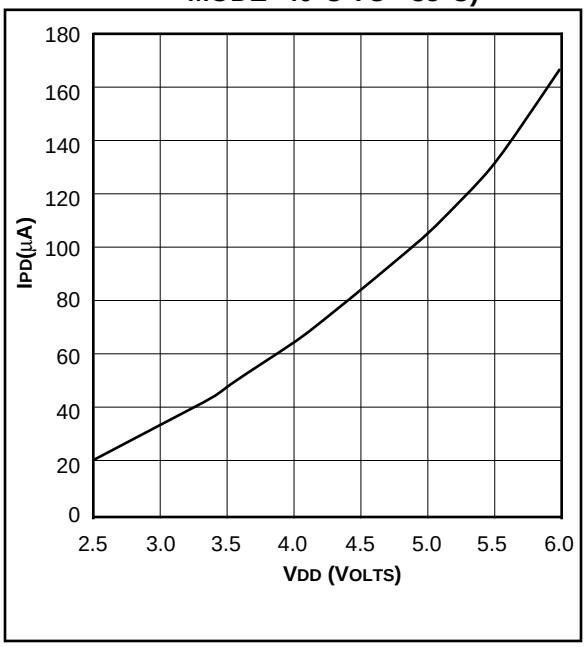

Note 1: The LCD module is turned on, internal charge pump enabled, 1/4 MUX, 32 Hz frame frequency and no load on LCD segments/commons. IPD will increase depending on the LCD panel connected to the PIC16C9XX.

Note 2: Indicates the clock source to the LCD module.

Data based on process characterization samples. See first page of this section for details.

© 1997 Microchip Technology Inc.

FIGURE 18-9: TYPICAL RC OSCILLATOR FREQUENCY vs. VDD

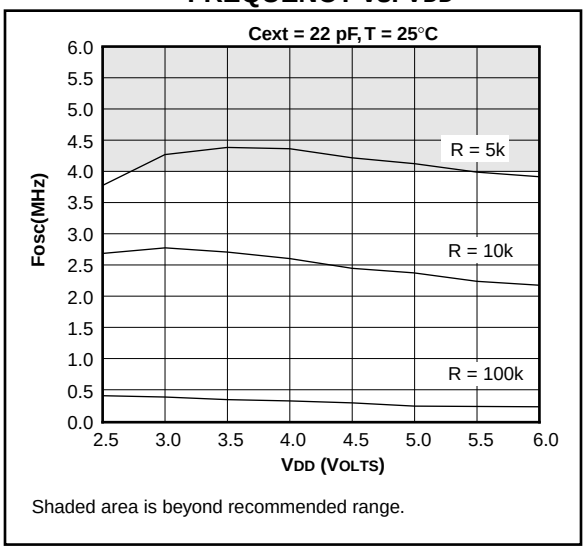

FIGURE 18-10: TYPICAL RC OSCILLATOR FREQUENCY vs. VDD

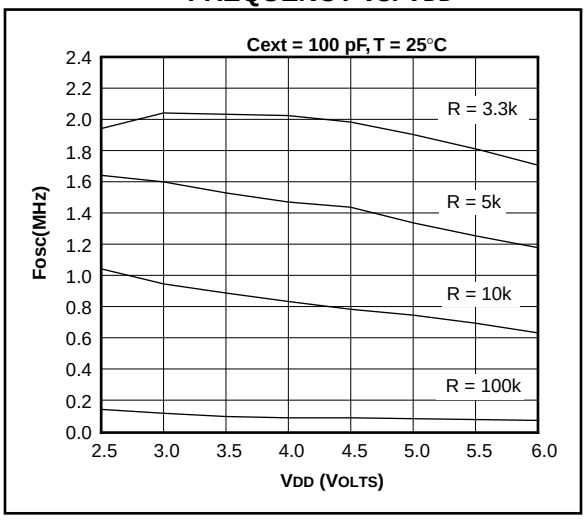

FIGURE 18-11: TYPICAL RC OSCILLATOR FREQUENCY vs. VDD

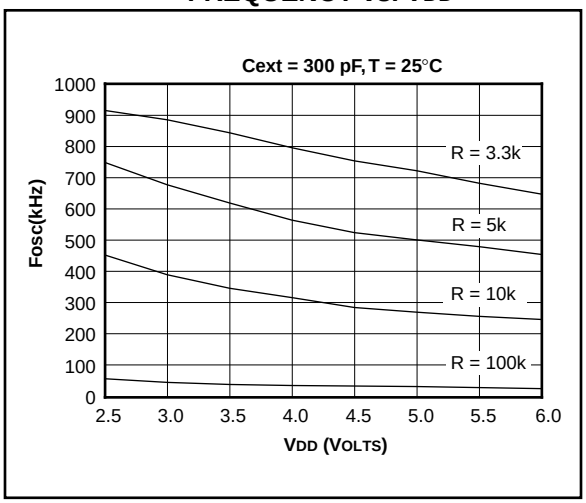

FIGURE 18-12: TYPICAL IPD vs. TIMER1 ENABLED (32 kHz, RC0/RC1 = 33 pF/33 pF, RC MODE)

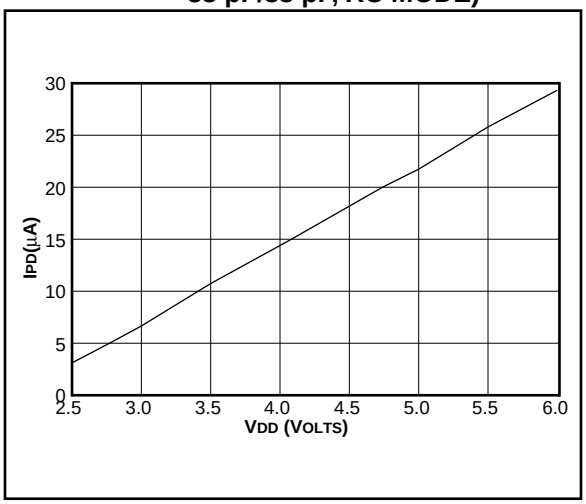

FIGURE 18-13: MAXIMUM IPD vs. TIMER1 ENABLED (32 kHz, RC0/RC1 = 33 pF/33 pF, 85°C TO -40°C, RC MODE)

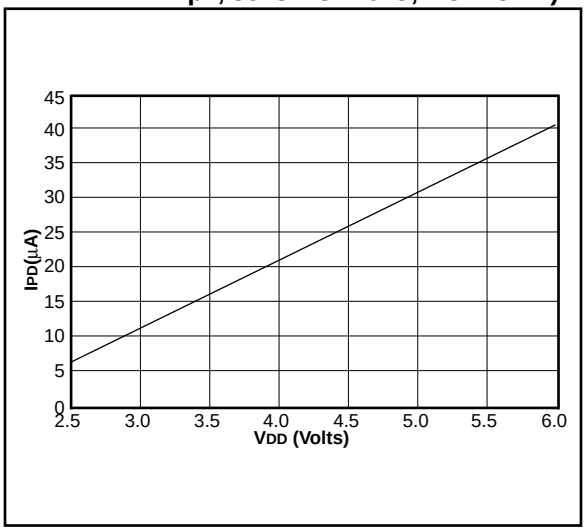

Data based on process characterization samples. See first page of this section for details.

FIGURE 18-14:TYPICAL IDD vs. FREQUENCY (RC MODE @ 20 pF, 25°C)

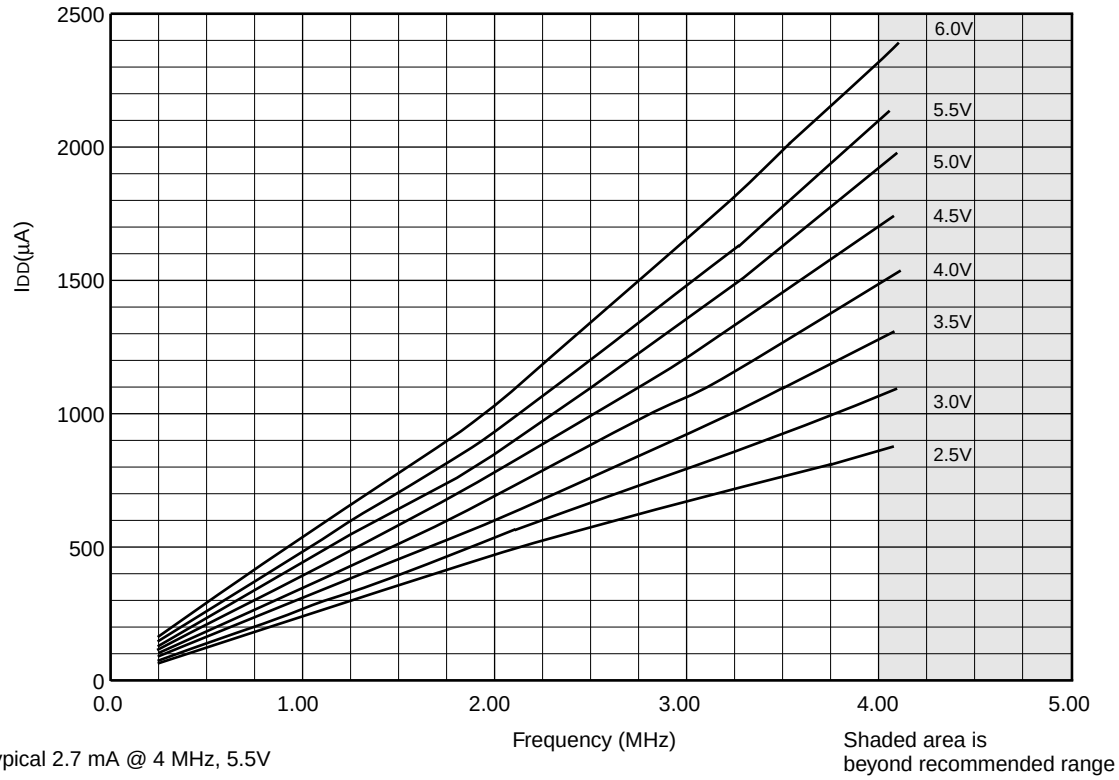

Typical 2.7 mA @ 4 MHz, 5.5V

FIGURE 18-15:MAXIMUM IDD vs. FREQUENCY (RC MODE @ 20 pF, -40°C TO +85°C)

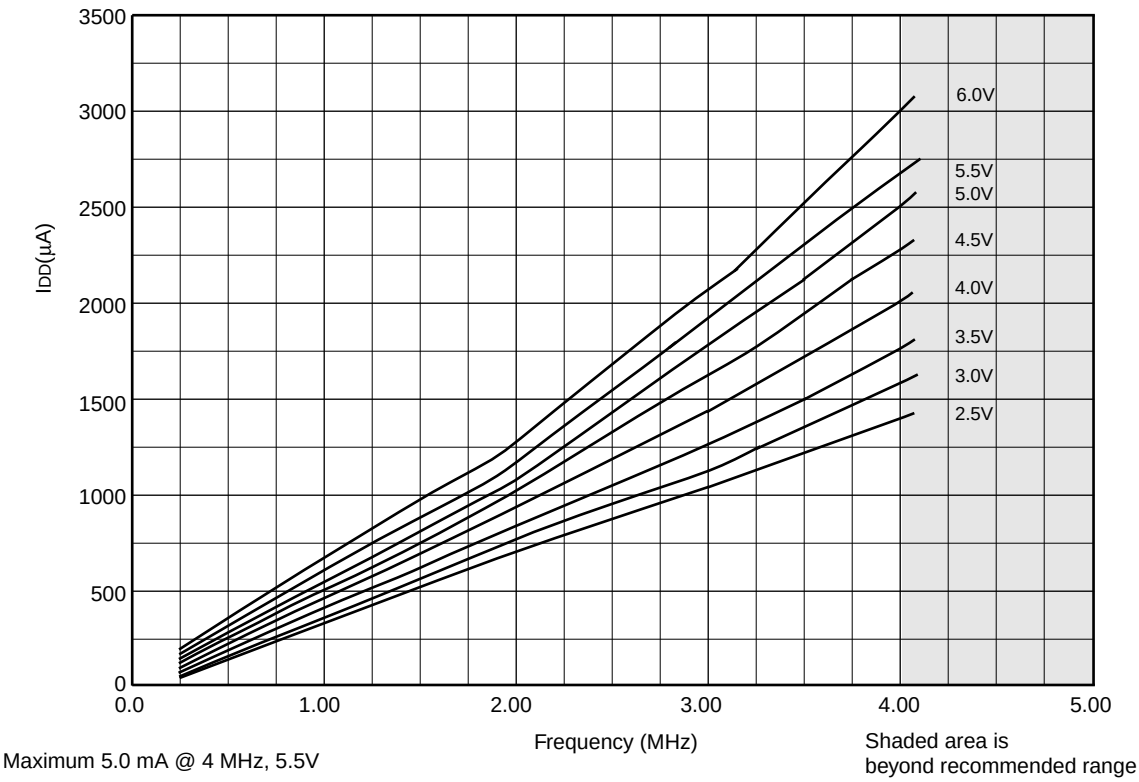

Maximum 5.0 mA @ 4 MHz, 5.5V

Data based on process characterization samples. See first page of this section for details.

© 1997 Microchip Technology Inc.

FIGURE 18-16:TYPICAL IDD vs. FREQUENCY (RC MODE @ 100 pF, 25°C)

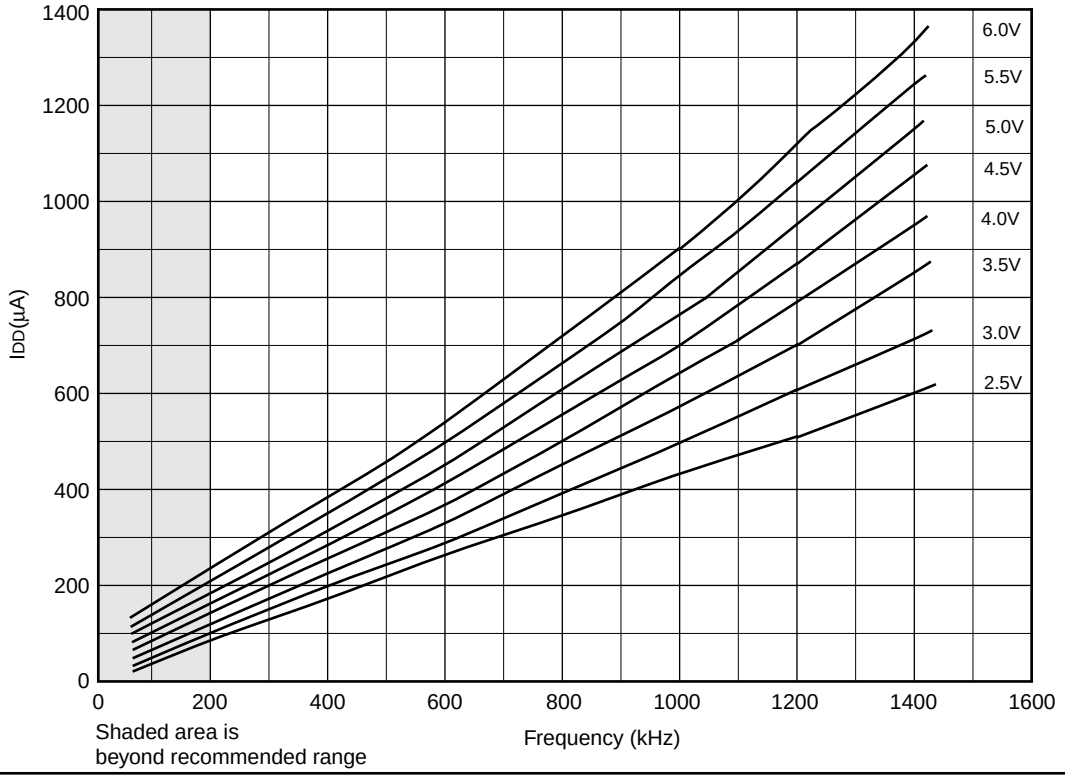

FIGURE 18-17:MAXIMUM IDD vs. FREQUENCY (RC MODE @ 100 pF, -40°C TO +85°C)

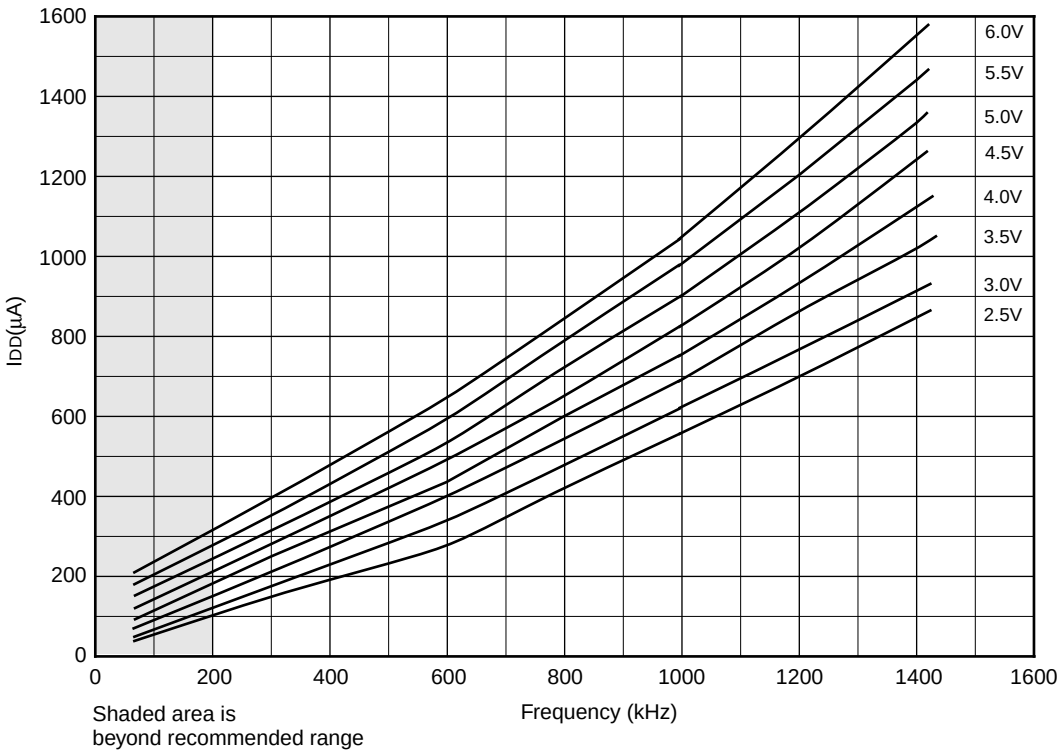

Data based on process characterization samples. See first page of this section for details.

FIGURE 18-18:TYPICAL IDD vs. FREQUENCY (RC MODE @ 300 pF, 25°C)

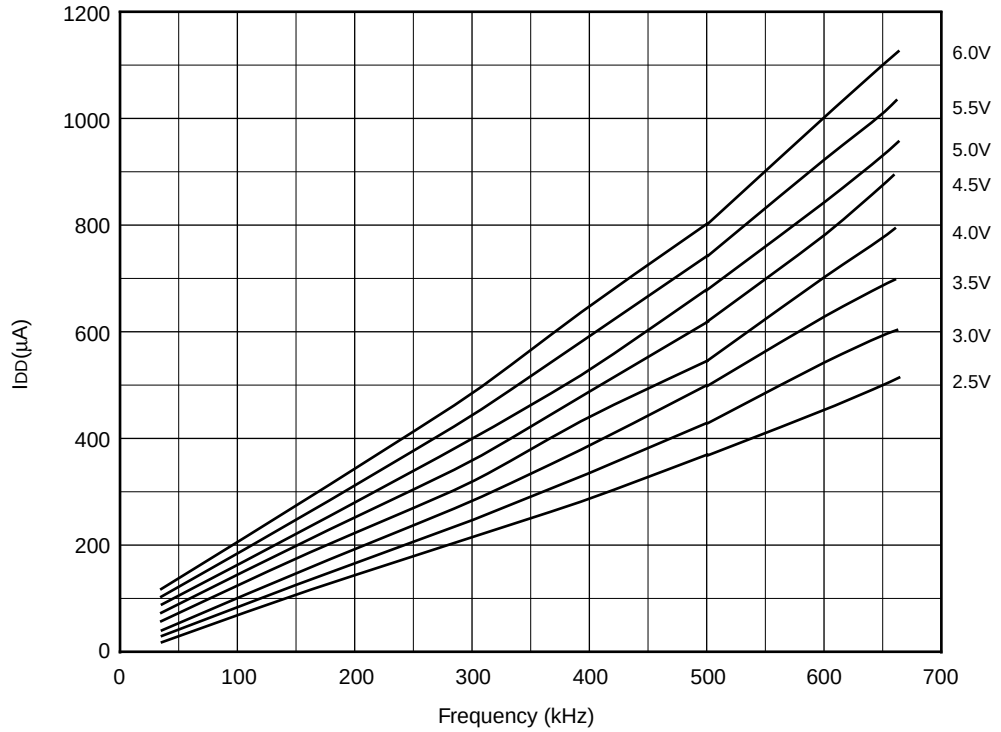

FIGURE 18-19:MAXIMUM IDD vs. FREQUENCY (RC MODE @ 300 pF, -40°C TO +85°C)

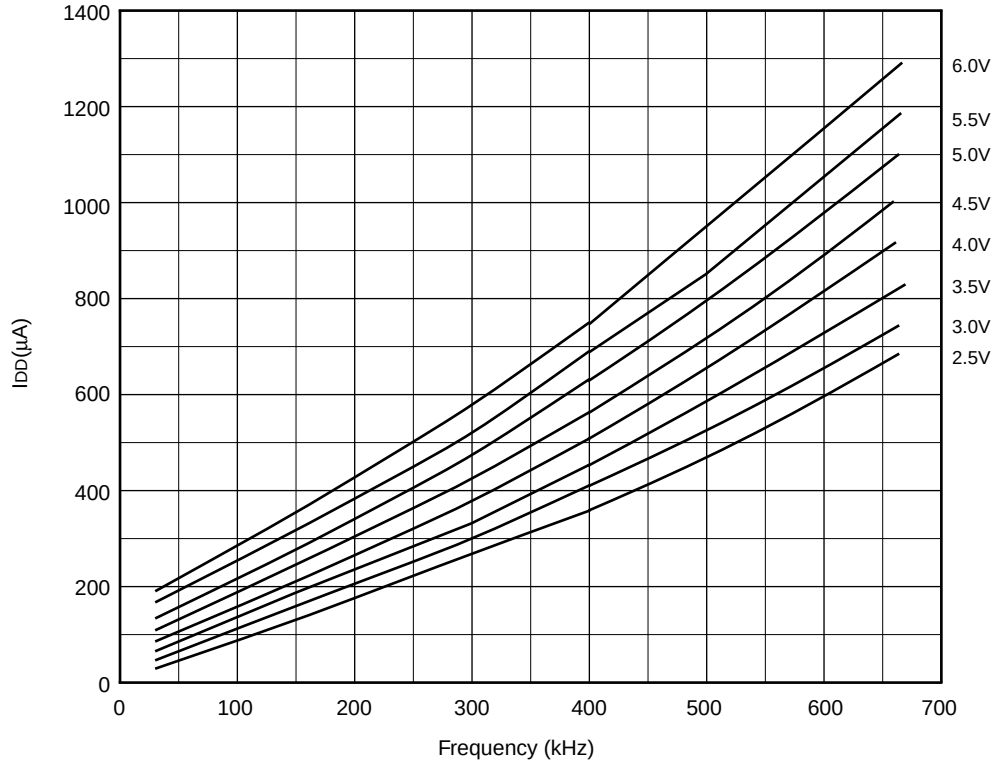

Data based on process characterization samples. See first page of this section for details.

© 1997 Microchip Technology Inc.

TABLE 18-1: RC OSCILLATOR FREQUENCIES

Cext	Rext	Average Fosc @ 5V, 25°C	
22 pF	5k	4.12 MHz	± 1.4%
	10k	2.35 MHz	± 1.4%
	100k	268 kHz	± 1.1%
100 pF	3.3k	1.80 MHz	± 1.0%
	5k	1.27 MHz	± 1.0%
	10k	688 kHz	± 1.2%
	100k	77.2 kHz	± 1.0%
300 pF	3.3k	707 kHz	± 1.4%
	5k	501 kHz	± 1.2%
	10k	269 kHz	± 1.6%
	100k	28.3 kHz	± 1.1%

The percentage variation indicated here is part to part variation due to normal process distribution. The variation indicated is ±3 standard deviation from average value for VDD = 5V.

FIGURE 18-20: TRANSCONDUCTANCE(gm) OF HS OSCILLATOR vs. VDD

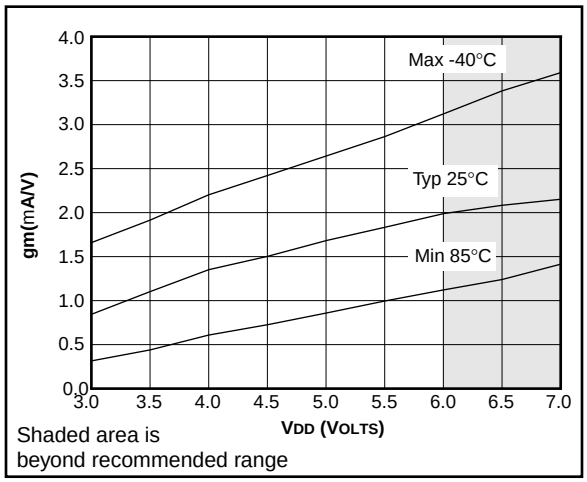

FIGURE 18-21: TRANSCONDUCTANCE(gm) OF LP OSCILLATOR vs. VDD

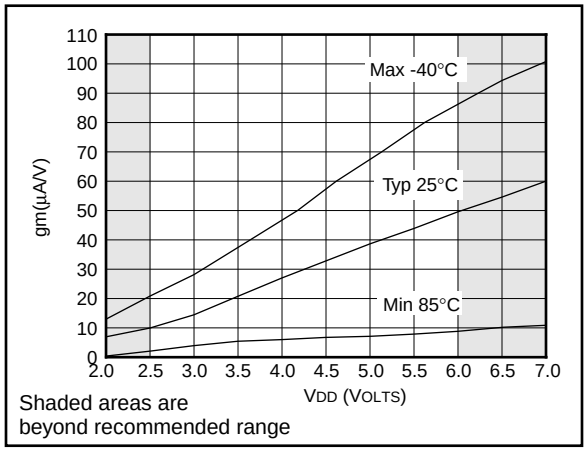

FIGURE 18-22: TRANSCONDUCTANCE(gm) OF XT OSCILLATOR vs. VDD

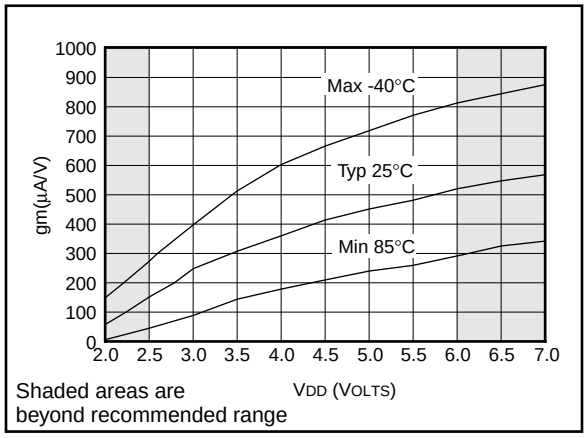

Data based on process characterization samples. See first page of this section for details.

FIGURE 18-23: TYPICAL XTAL STARTUP TIME vs. VDD (LP MODE, 25°C)

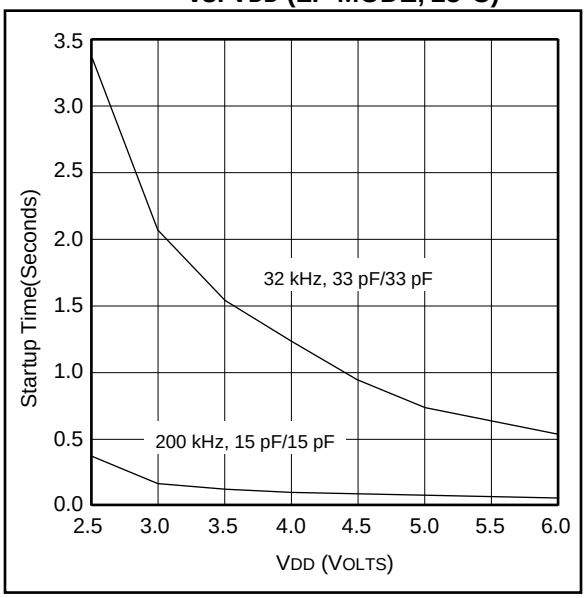

FIGURE 18-24: TYPICAL XTAL STARTUP TIME vs. VDD (HS MODE, 25°C)

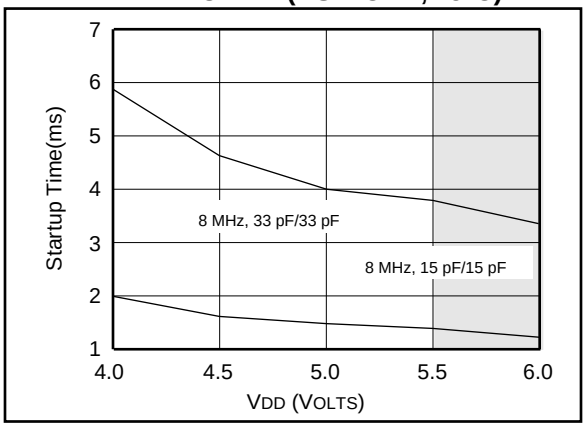

FIGURE 18-25: TYPICAL XTAL STARTUP TIME vs. VDD (XT MODE, 25°C)

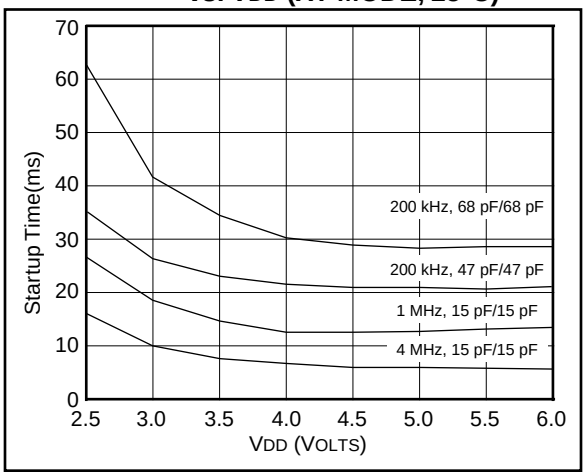

FIGURE 18-26: TYPICAL IDD vs. VDD (LP MODE @ 25°C)

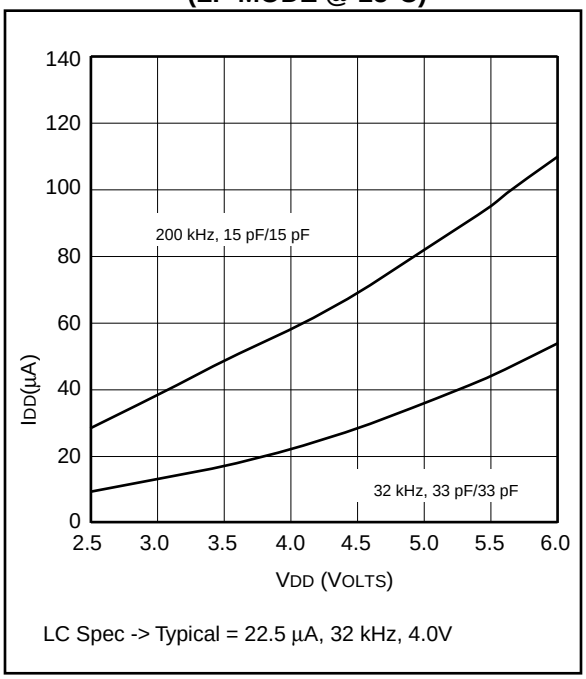

FIGURE 18-27: MAXIMUM IDD vs. VDD (LP MODE -40°C TO +85°C)

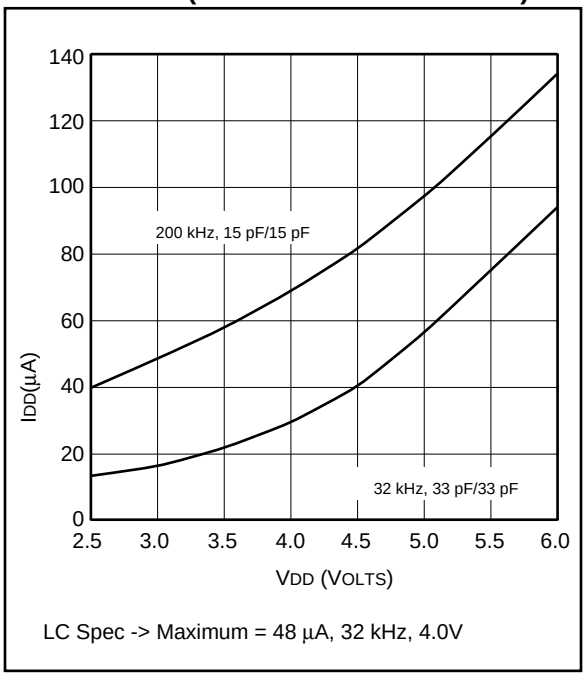

Data based on process characterization samples. See first page of this section for details.

© 1997 Microchip Technology Inc.

FIGURE 18-28:TYPICAL IDD vs. VDD (XT MODE @ 25°C)

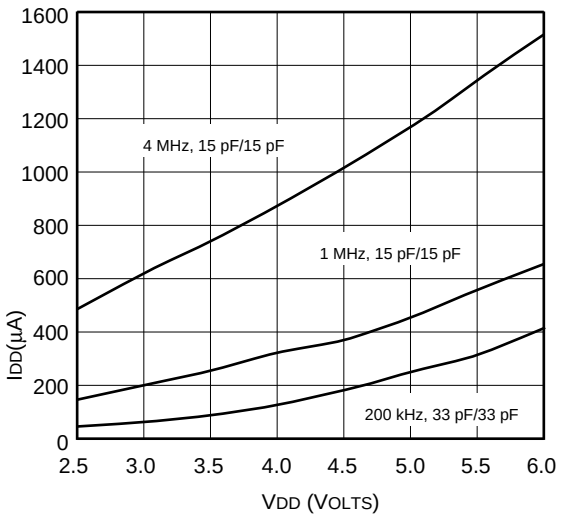

Typical = 2.7 µA, 4 MHz, 5.5V

FIGURE 18-29:MAXIMUM IDD vs. VDD (XT MODE -40°C TO +85°C)

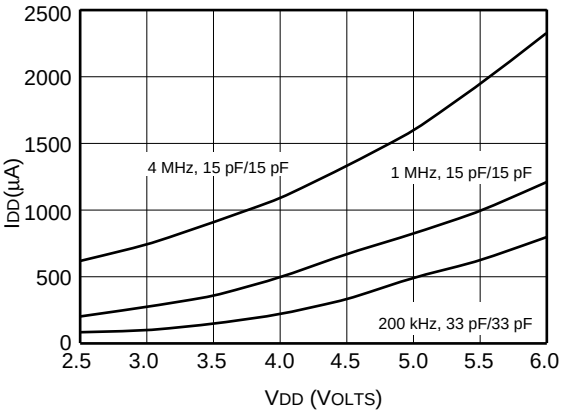

Maximum = 5 mA, 4 MHz, 5.5V

FIGURE 18-30:TYPICAL IDD vs. VDD (HS MODE @ 25°C)

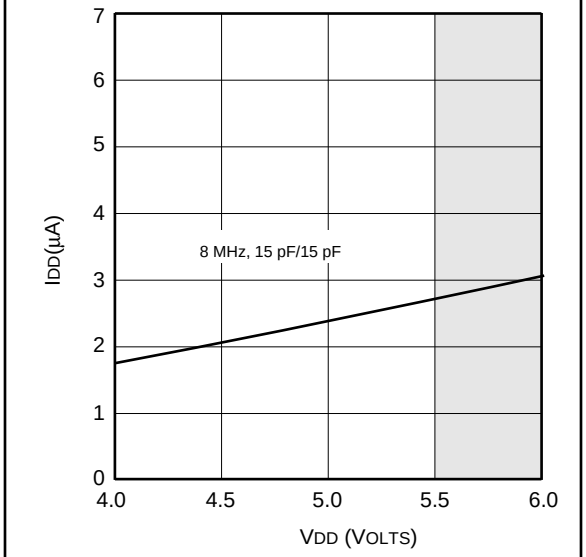

Typical = 3.5 mA, 8 MHz, 5.5V

FIGURE 18-31:MAXIMUM IDD vs. VDD (HS MODE -40°C TO +85°C)

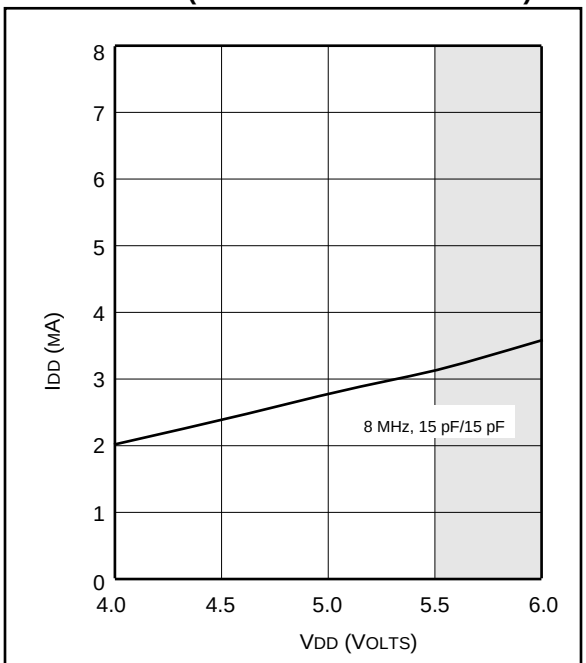

Maximum = 7 mA, 8 MHz, 5.5V

Data based on process characterization samples. See first page of this section for details.

NOTES:

© 1997 Microchip Technology Inc.

19.0 PACKAGING INFORMATION

19.1 64-Lead Plastic Surface Mount (TQFP 10x10x1 mm Body 1.0/0.10 mm Lead Form))

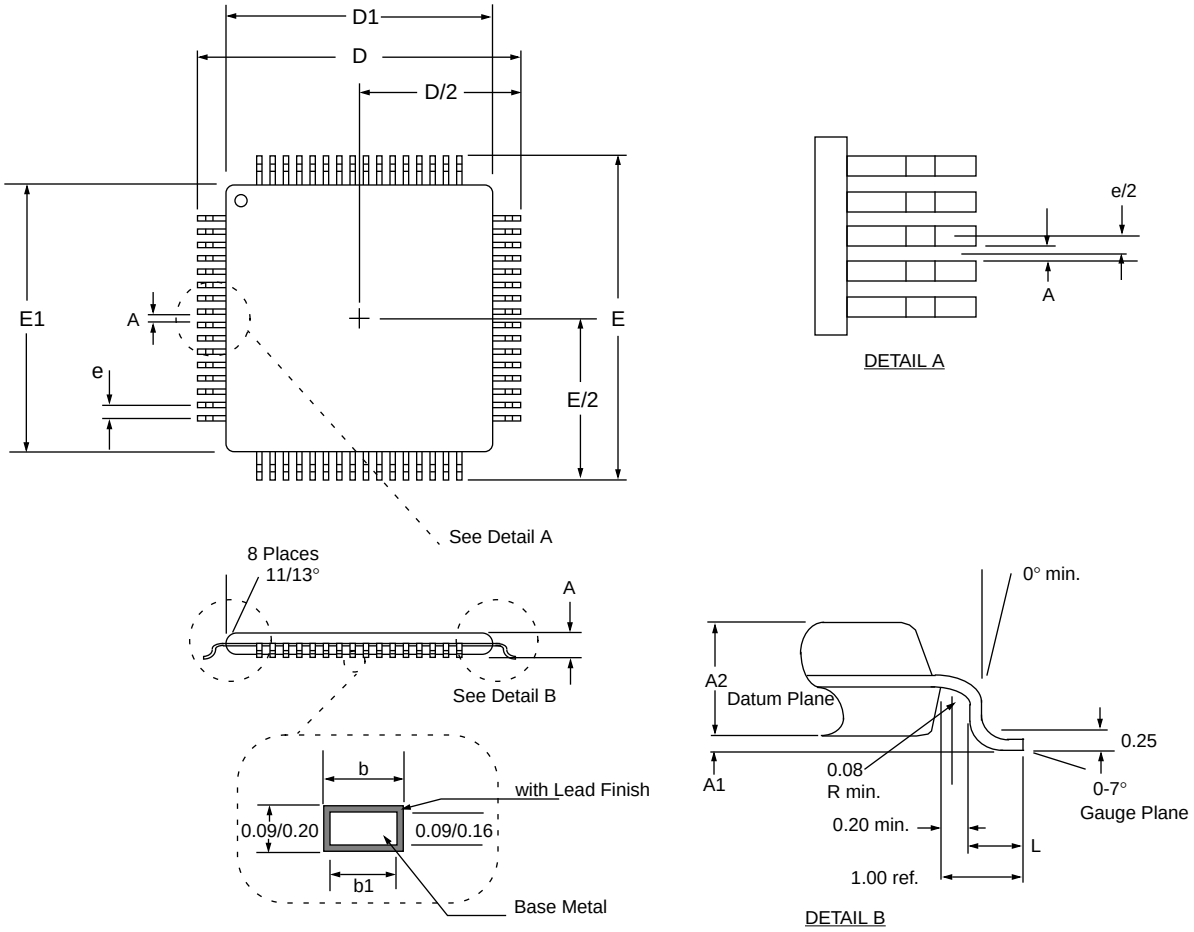

Package Group: Plastic TQFP						
	Millimeters			Inches		
Symbol	Min	Nominal	Max	Min	Nominal	Max
α	0°	-	7°	0°	-	7°
A	-	-	1.20	-	-	0.047
A1	0.05	0.10	0.15	0.002	0.004	0.006
A2	0.95	1.00	1.05	0.037	0.039	0.041
b	0.17	0.22	0.27	0.007	0.009	0.011
b1	0.17	0.20	0.23	0.007	0.008	0.009
D	-	12.00	-	-	0.472	-
D1	-	10.00	-	-	0.394	-
E	-	12.00	-	-	0.472	-
E1	-	10.00	-	-	0.394	-
e	-	0.50	-	-	0.020	-
L	0.45	0.60	0.75	0.018	0.024	0.030
N	64	64	64	64	64	64

© 1997 Microchip Technology Inc.

19.2 64-Lead Plastic Dual In-line (750 mil)

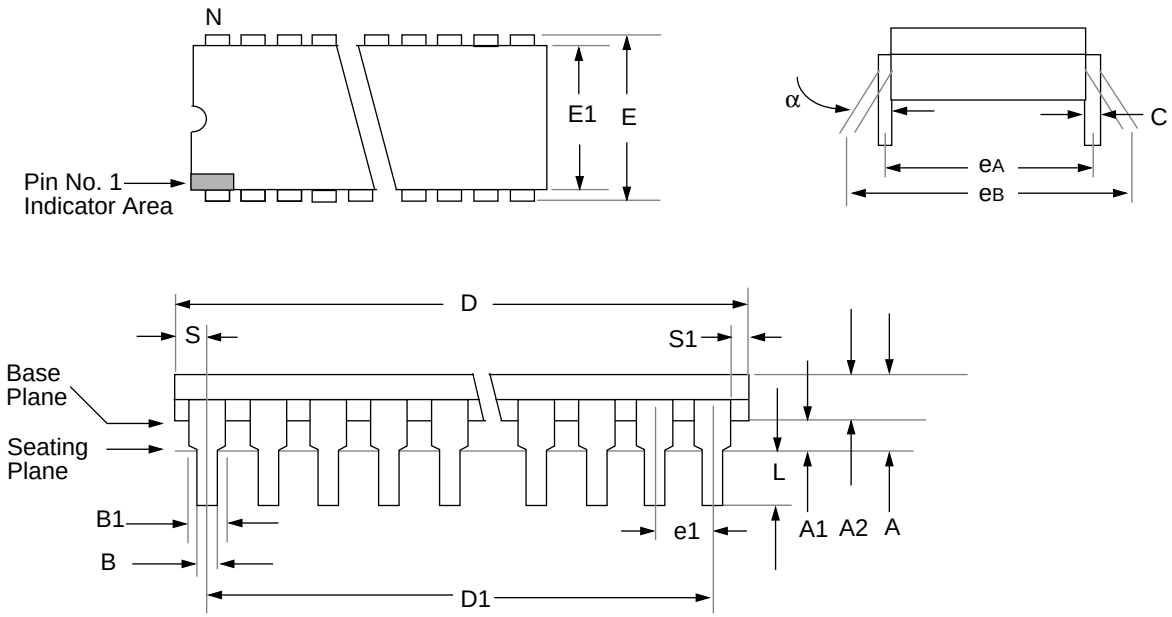

Package Group: Plastic Dual In-Line (PLA)						
	Millimeters			Inches		
Symbol	Min	Max	Notes	Min	Max	Notes
α	0°	15°		0°	15°	
A	–	5.08		–	0.200	
A1	0.51	–		0.020	–	
A2	3.38	4.27		0.133	0.168	
B	0.38	0.56		0.015	0.022	
B1	.076	1.27	**Typical**	0.030	0.050	**Typical**
C	0.20	0.30	**Typical**	0.008	0.012	**Typical**
D	57.40	57.91		2.260	2.280	
D1	55.12	55.12	**Reference**	2.170	2.170	**Reference**
E	19.05	19.69		0.750	0.775	
E1	16.76	17.27		0.660	0.680	
e1	1.73	1.83	**Typical**	0.068	0.072	**Typical**
eA	19.05	19.05	**Reference**	0.750	0.750	**Reference**
eB	19.05	21.08		0.750	0.830	
L	3.05	3.43		0.120	0.135	
N	64	64		64	64	
S	1.19	–		0.047	–	
S1	0.686	–		0.027	–	

© 1997 Microchip Technology Inc.

19.3 68-Lead Plastic Leaded Chip Carrier (Square)

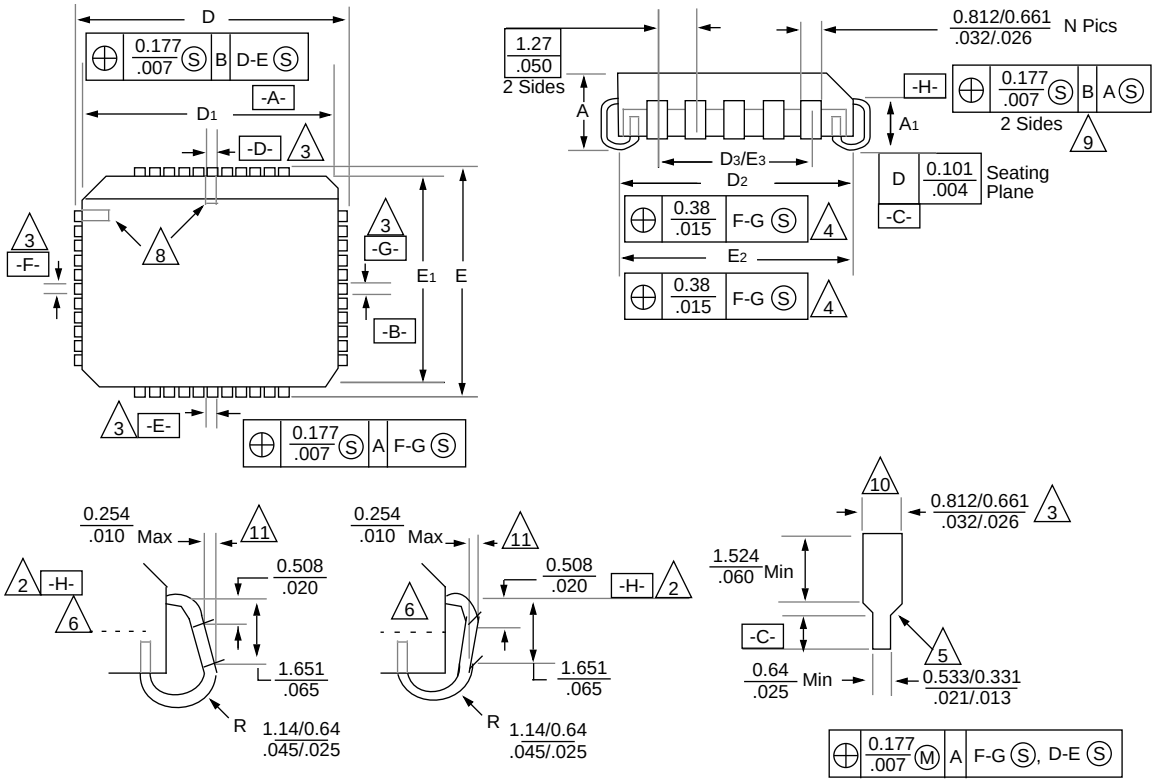

Package Group: Plastic Leaded Chip Carrier (PLCC)						
	Millimeters			Inches		
Symbol	Min	Max	Notes	Min	Max	Notes
A	4.191	4.699		0.165	0.185	
A1	2.286	2.794		0.090	0.110	
D	25.019	25.273		0.985	0.995	
D1	24.130	24.334		0.950	0.958	
D2	22.860	23.622		0.900	0.930	
D3	20.320	-	**Reference**	0.800	-	**Reference**
E	25.019	25.273		0.985	0.995	
E1	24.130	24.334		0.950	0.958	
E2	22.860	23.622		0.900	0.930	
E3	20.320	-	**Reference**	0.800	-	**Reference**
N	68	-		68	-	
CP	-	0.102		-	0.004	
LT	0.203	0.254		0.008	0.010	

19.4 Package Marking Information

68-Lead CERQUAD Windowed

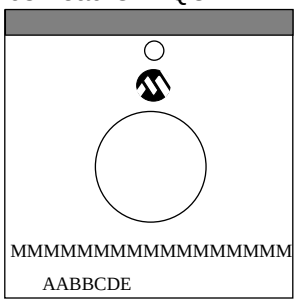

Example

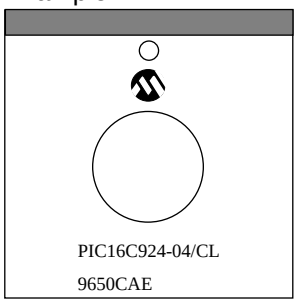

64-Lead TQFP

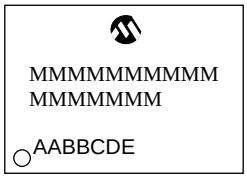

Example

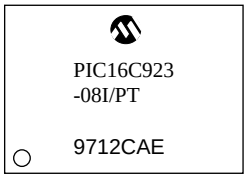

68-Lead PLCC

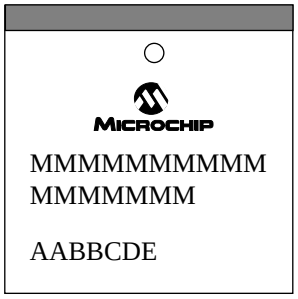

Example

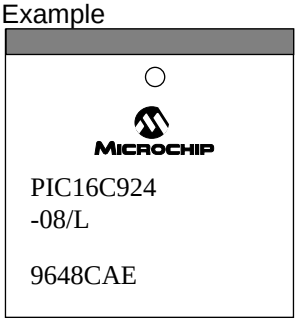

64-Lead SDIP (Shrink DIP)

Example

Legend:	MM...M	Microchip part number information
	XX...X	Customer specific information*
	AA	Year code (last 2 digits of calender year)
	BB	Week code (week of January 1 is week '01')
	C	Facility code of the plant at which wafer is manufactured. C = Chandler, Arizona, U.S.A. S = Tempe, Arizona, U.S.A.
	D_1	Mask revision number for microcontroller
	E	Assembly code of the plant or country of origin in which part was assembled.
Note:	In the event the full Microchip part number cannot be marked on one line, it will be carried over to the next line thus limiting the number of available characters for customer specific information.	

* Standard OTP marking consists of Microchip part number, year code, week code, facility code, mask revision number, and assembly code. For OTP marking beyond this, certain price adders apply. Please check with your Microchip Sales Office. For QTP devices, any special marking adders are included in QTP price.

© 1997 Microchip Technology Inc.

APPENDIX A:

The following are the list of modifications over the PIC16C5X microcontroller family:

1. Instruction word length is increased to 14-bits. This allows larger page sizes both in program memory (4K now as opposed to 512 before) and register file (192 bytes now versus 32 bytes before).
2. A PC high latch register (PCLATH) is added to handle program memory paging. Bits PA2, PA1, PA0 are removed from STATUS register.
3. Data memory paging is redefined slightly. STATUS register is modified.
4. Four new instructions have been added: `RETURN`, `RETFIE`, `ADDLW`, and `SUBLW`.
   Two instructions TRIS and OPTION are being phased out although they are kept for compatibility with PIC16C5X.
5. OPTION and TRIS registers are made addressable.
6. Interrupt capability is added. Interrupt vector is at 0004h.
7. Stack size is increased to 8 deep.
8. Reset vector is changed to 0000h.
9. Reset of all registers is revisited. Five different reset (and wake-up) types are recognized. Registers are reset differently.
10. Wake up from SLEEP through interrupt is added.
11. Two separate timers, Oscillator Start-up Timer (OST) and Power-up Timer (PWRT) are included for more reliable power-up. These timers are invoked selectively to avoid unnecessary delays on power-up and wake-up.
12. PORTB has weak pull-ups and interrupt on change feature.
13. T0CKI pin is also a port pin (RA4) now.
14. FSR is made a full eight bit register.
15. “In-circuit programming” is made possible. The user can program PIC16CXX devices using only five pins: V_{DD}, V_{SS}, $\overline{MCLR}$/V_{PP}, RB6 (clock) and RB7 (data in/out).
16. PCON status register is added with a Power-on Reset status bit ($\overline{POR}$).
17. Code protection scheme is enhanced such that portions of the program memory can be protected, while the remainder is unprotected.

APPENDIX B: COMPATIBILITY

To convert code written for PIC16C5X to PIC16CXX, the user should take the following steps:

1. Remove any program memory page select operations (PA2, PA1, PA0 bits) for `CALL`, `GOTO`.
2. Revisit any computed jump operations (write to PC or add to PC, etc.) to make sure page bits are set properly under the new scheme.
3. Eliminate any data memory page switching. Redefine data variables to reallocate them.
4. Verify all writes to STATUS, OPTION, and FSR registers since these have changed.
5. Change reset vector to 0000h.

© 1997 Microchip Technology Inc.

APPENDIX C: WHAT'S NEW

Figure 13-13 (Resistor Ladder and Charge Pump) in LCD Section.

Parameter D150 - Open Drain High Voltage.

DC and AC Characterization Graphs and Tables.

APPENDIX D: WHAT'S CHANGED

Various descriptions for clarity.

Example code for Changing prescaler assignment between Timer0 and the WDT.

The A/D section has many changes that provide greater clarification of A/D operation.

The Instruction Set has Q-cycle activity listings for every instruction.

The following Electrical Characteristic Parameter values have changed to:

D011 (Standard Voltage Devices, C)
Typical 22.5 µA
Max 48 µA

D022 (Standard Voltage Devices)
Typical 40 µA
Max 55 µA

D024 (Standard Voltage Devices)
Typical 33 µA
Max 60 µA

D001 (Extended Voltage Devices, LC)
Min 2.5 V

D011 (Extended Voltage Devices, LC)
Typical 13.5 µA
Max 30 µA

D022 (Extended Voltage Devices, LC)
Typical 36 µA
Max 50 µA

D024 (Extended Voltage Devices, LC)
Typical 15 µA
Max 29 µA

D030 (with TTL)
Max 0.5V_{DD} V (ENTIRE RANGE)
Max 0.8V V ($4.5V \leq V_{DD} \leq 5.5V$)

D201, D202

Deleted D210 and D211, D251, D253, D260, D271

D222
Min 5 kHz
Typical 15 kHz
Max 50 kHz

D223, D224 - units to ns.

Added D265 (VLCDADJ voltage limits.

Changed parameters:

12 - TckR 35 ns Typical

13 - TckF 35 ns Typical

15 - TioV2ckH Tosc + 200 ns Min

18 - TosH2ioL 200 ns Min (LC devices)

30 - TmcL 2 µs Min

34 - Tioz 2.1 µs Max

Timer0 and Timer1 External Clock Timings - Various.

53 - TccR,
54 - TccF

73 - TdiV2scH 50 ns Min

74 - TscH2diL 50 ns Min

Combined A/D specification tables for Standard and Extended Voltage devices.

© 1997 Microchip Technology Inc.

INDEX

A

A/D
- Accuracy/Error ... 86
- ADCON0 ... 79, 80
- ADCON1 ... 79, 80
- ADIF ... 80
- Analog-to-Digital Converter ... 79
- Configuring Analog Port ... 83
- Connection Considerations ... 87
- Conversion time ... 85
- Conversions ... 84
- Converter Characteristics ... 158
- Faster Conversion - Lower Resolution Tradeoff ... 85
- GO/$\overline{\text{DONE}}$ ... 80
- Internal Sampling Switch (Rss) Impedance ... 82
- Operation During Sleep ... 86
- Sampling Requirements ... 82
- Sampling Time ... 82
- Source Impedance ... 82
- Transfer Function ... 87

A/D Conversion Clock ... 83

Registers
- Section ... 19

Absolute Maximum Ratings ... 141

ACK ... 70, 74, 75, 76, 77

ADCON0 Register ... 19

ADCON1 Register ... 20

ADIE bit ... 26

ADIF bit ... 27

ADRES ... 19, 79, 80, 109

ALU ... 9

Application Notes
- AN546 ... 79
- AN552 ... 33
- AN556 ... 29
- AN578 ... 63
- AN594 ... 57
- AN607 ... 107

Architecture
- Harvard ... 9
- Overview ... 9
- von Neumann ... 9

Assembler
- MPASM Assembler ... 138

B

BF ... 74

Block Diagrams
- A/D ... 81
- Capture Mode ... 58
- Compare Mode ... 58
- External Brown-out1 ... 112
- External Brown-out2 ... 112
- External Parallel Cystal Oscillator ... 105
- External Power-on Reset ... 112
- External Series Crystal Oscillator ... 105
- Interrupt Logic ... 114
- LCD Module ... 90
- On-Chip Reset Circuit ... 106
- PIC16C923 ... 10
- PIC16C924 ... 11
- PORTC ... 35
- PORTD ... 36, 37
- PORTE ... 38
- PORTF ... 39
- PORTG ... 40
- PWM ... 59
- RA3:RA0 and RA5 Port Pins ... 31
- RA4/T0CKI Pin ... 31
- RB3:RB0 Port Pins ... 33
- RB7:RB4 Port Pins ... 33
- RC Oscillator ... 105
- SSP (I^2C Mode) ... 73
- SSP (SPI Mode) ... 65
- Timer0 ... 45
- Timer0/WDT Prescaler ... 48
- Timer1 ... 52
- Timer2 ... 55
- Watchdog Timer ... 116

Brown-out Protection Circuit ... 112

C

C bit ... 23

Capture/Compare/PWM (CCP)
- Capture Mode ... 58
- CCP1 ... 57
- CCP1CON ... 109
- CCPR1H ... 109
- CCPR1L ... 109
- Compare Mode ... 58
- Compare Mode Block Diagram ... 58
- Prescaler ... 58
- PWM Block Diagram ... 59
- PWM Mode ... 59
- PWM, Example Frequencies/Resolutions ... 60
- Section ... 57

Carry bit ... 9

CCP1CON Register ... 19

CCP1IE bit ... 26

CCP1IF bit ... 27

CCPR1H Register ... 19

CCPR1L Register ... 19

Clocking Scheme ... 15

Code Examples
- Call of a Subroutine in Page 1 from Page 0 ... 30
- Changing Between Capture Prescalers ... 58
- Changing Prescaler (Timer0 to WDT) ... 49
- Changing Prescaler (WDT to Timer0) ... 49
- Doing an A/D Conversion ... 84
- I/O Programming ... 41
- I^2C Module Operation ... 78
- Indirect Addressing ... 30
- Initializing PORTA ... 31
- Initializing PORTB ... 33
- Initializing PORTC ... 35
- Initializing PORTD ... 36
- Initializing PORTE ... 38
- Initializing PORTF ... 39
- Initializing PORTG ... 40
- Loading the SSPBUF register ... 65
- Reading a 16-bit Free-running Timer ... 53

Code Protection ... 103, 118

Computed GOTO ... 29

Configuration Bits ... 103

D

DC bit ... 23

DC Characteristics ... 142, 143

Development Support ... 137

Development Tools ... 137

Digit Carry bit ... 9

Direct Addressing 30

E

Electrical Characteristics 141
External Power-on Reset Circuit 112

F

Family of Devices
  PIC16C9XX 6
FSR 108
FSR Register 19, 20, 21, 22, 30
Fuzzy Logic Dev. System (*fuzzy*TECH®-MP) 139

G

GIE 113

I

I/O Ports
  Section 31
I/O Programming Considerations 41
I^2C
  Addressing I^2C Devices 70
  Arbitration 72
  BF 74, 75
  CKP 76
  Clock Synchronization 72
  Combined Format 71
  I^2C Overview 69
  Initiating and Terminating Data Transfer 69
  Master-Receiver Sequence 71
  Master-Transmitter Sequence 71
  Multi-master 72
  START 69
  STOP 69, 70
  Transfer Acknowledge 70
ICEPIC Low-Cost PIC16CXXX In-Circuit Emulator 137
IDLE_MODE 78
In-Circuit Serial Programming 103, 118
INDF 108
INDF Register 19, 20, 21, 22, 30
Indirect Addressing 30
Instruction Cycle 15
Instruction Flow/Pipelining 15
Instruction Format 119
Instruction Set
  ADDLW 121
  ADDWF 121
  ANDLW 122
  ANDWF 122
  BCF 122
  BSF 123
  BTFSC 123
  BTFSS 124
  CALL 124
  CLRF 125
  CLRW 125
  CLRWDT 126
  COMF 126
  DECF 126
  DECFSZ 127
  GOTO 127
  INCF 128
  INCFSZ 128
  IORLW 129
  IORWF 129
  MOVF 130
  MOVLW 130
  MOVWF 130
  NOP 131
  OPTION 131
  RETFIE 131
  RETLW 132
  RETURN 132
  RLF 133
  RRF 133
  SLEEP 134
  SUBLW 134
  SUBWF 135
  SWAPF 135
  TRIS 135
  XORLW 136
  XORWF 136
  Section 119
INT Interrupt 115
INTCON 109, 113, 115
INTCON Register 19, 20, 21, 22, 25, 102
INTEDG 115
INTEDG bit 24
Inter-Integrated Circuit (I^2C) 63
Internal Sampling Switch (Rss) Impedance 82
Interrupt Flag 113
Interrupts 103, 113
  RB7:RB4 Port Change 33
IRP bit 23

K

KeeLoq® Evaluation and Programming Tools 139

L

Loading of PC 29

M

$\overline{\text{MCLR}}$ 106, 108
Memory
  Data Memory 17
  Maps, PIC16C9XX 17
  Program Memory 17
MP-DriveWay™ - Application Code Generator 139
MPLAB C 139
MPLAB Integrated Development Environment Software .. 138

O

One-Time-Programmable Devices 7
OPCODE 119
OPTION 109, 115
OPTION Register 20, 22, 24
Orthogonal 9
OSC selection 103
Oscillator
  HS 104, 107
  LP 104, 107
Oscillator Configurations 104
Output of TMR2 55

P

Paging, Program Memory 29
PC 108
PCL Register 19, 20, 21, 22, 29
PCLATH 109
PCLATH Register 19, 20, 21, 22, 29
PCON 109
PCON Register 28
$\overline{\text{PD}}$ 106, 108
$\overline{\text{PD}}$ bit 23
PICDEM-1 Low-Cost PICmicro Demo Board 138
PICDEM-2 Low-Cost PIC16CXX Demo Board 138
PICDEM-3 Low-Cost PIC16CXXX Demo Board 138

© 1997 Microchip Technology Inc.

PICMASTER® In-Circuit Emulator 137
PICSTART® Plus Entry Level Development System 137
PIE1 113
PIE1 Register 20, 26, 102
Pin Functions
    $\overline{MCLR}$VPP 12
    OSC1/CLKIN 12
    OSC2/CLKOUT 12
    RA0/AN0 12
    RA1/AN1 12
    RA2/AN2 12
    RA3/AN3/VREF 12
    RA4/T0CKI 12
    RA5/AN4/$\overline{SS}$ 12
    RB0/INT 12
    RB1 12
    RB2 12
    RB3 12
    RB4 12
    RB5 12
    RB6 12
    RB7 12
    RC0/T1OSO/T1CKI 12
    RC1/T1OSI 12
    RC2/CCP1 12
    RC3/SCK/SCL 12
    RC4/SDI/SDA 12
    RC5/SDO 12
    RD0/SEG00 13
    RD1/SEG01 13
    RD2/SEG02 13
    RD3/SEG03 13
    RD4/SEG04 13
    RD5/SEG29/COM3 13
    RD6/SEG30/COM2 13
    RD7/SEG31/COM1 13
    RE0/SEG05 13
    RE1/SEG06 13
    RE2/SEG07 13
    RE3/SEG08 13
    RE4/SEG09 13
    RE5/SEG10 13
    RE6/SEG11 13
    RE7/SEG27 13
    RF0/SEG12 13
    RF1/SEG13 13
    RF2/SEG14 13
    RF3/SEG15 13
    RF4/SEG16 13
    RF5/SEG17 13
    RF6/SEG18 13
    RF7/SEG19 13
    RG0/SEG20 13
    RG1/SEG21 13
    RG2/SEG22 13
    RG3/SEG23 13
    RG4/SEG24 13
    RG5/SEG25 13
    RG6/SEG26 13
    RG7/SEG28 13
    VDD 14
    VSS 14
PIR1 113
PIR1 Register 19, 102
POP 29
POR 107, 108
    Oscillator Start-up Timer (OST) 103, 107
    Power Control Register (PCON) 107
    Power-on Reset (POR) 103, 107, 108
    Power-up Timer (PWRT) 103, 107
    Power-Up-Timer (PWRT) 107
    Time-out Sequence 107
    Time-out Sequence on Power-up 111
    $\overline{TO}$ 106, 108
$\overline{POR}$ bit 28
Port RB Interrupt 115
PORTA Register 19, 31
PORTB 77, 108
PORTB Register 19, 21, 33
PORTC 108
PORTC Register 19, 35
PORTD 109
PORTD Register 36
PORTE 109
PORTE Register 38
PORTF Register 39
PORTG Register 40
Ports
    PORTA 31
    PORTB 33
    PORTC 35
    PORTD 36
    PORTE 38
    PORTF 39
    PORTG 40
Power-down Mode (SLEEP) 117
PR2 109
PR2 Register 20
Prescaler, Switching Between Timer0 and WDT 49
PRO MATE® II Universal Programmer 137
Program Branches 9
Program Memory Maps, PIC16C9XX 17
PS0 bit 24
PS1 bit 24
PS2 bit 24
PSA bit 24
PUSH 29

Q

Quick-Turnaround-Production 7

R

R/W bit 70, 74, 75, 76
RBIF bit 33, 115
$\overline{RBPU}$ bit 24
RC Oscillator 104, 105, 107
RCV_MODE 78
Read-Modify-Write 41
Register File 17
Reset 103, 106
RP0 bit 17, 23
RP1 bit 23

S

SCL 74, 76, 77
SDA 76, 77
SEEVAL® Evaluation and Programming System 139
Serialized Quick-Turnaround-Production 7
Slave Mode
    SCL 74
    SDA 74
SLEEP 103, 106
Software Simulator (MPLAB-SIM) 139
Special Features of the CPU 103

Special Function Registers, Section 19
SPI
Master Mode 66
Serial Clock 65
Serial Data In 65
Serial Data Out 65
Serial Peripheral Interface (SPI) 63
Slave Select 65
SPI clock 66
SPI Mode 65
SSP
SSPADD 73, 74, 109
SSPBUF 66, 73, 74, 76, 109
SSPCON 64, 73, 75, 76, 109
SSPIF bit 74, 75, 76, 77
SSPOV bit 74
SSPSR 66, 74, 76
SSPSTAT 63, 73, 75, 76, 109
SSP I^2C
Addressing 74
Multi-master Mode 77
Reception 75
SSP I^2C Operation 73
START 76
START (S) 77
STOP (P) 77
Transmission 76
SSPADD Register 20
SSPBUF Register 19
SSPCON Register 19
SSPIE bit 26
SSPIF bit 27
SSPOV 74
SSPSTAT Register 20
Stack 29
Overflows 29
Underflow 29
STATUS 108
STATUS Register 19, 20, 21, 22

T

T0CS bit 24
T1CON Register 19, 102
T2CON Register 19
TAD 83
Timer Modules, Overview 43
Timer0
RTCC 108
T0IF 115
TMR0 Interrupt 115
Timer1
Resetting of Timer1 Registers 54
Resetting Timer1 using a CCP Trigger Output 54
T1CON 51, 109
TMR1H 109
TMR1L 109
Timer2
T2CON 55, 109
TIMER2 (TMR2) Module 55
TMR2 109
Timers
Timer0
Block Diagram 45
External Clock 47
External Clock Timing 47
Increment Delay 47
Interrupt 45
Interrupt Timing 46
Overview 43
Prescaler 48
Prescaler Block Diagram 48
Section 45
Synchronization 47
Timing 45
Timer1
Capacitor Selection 53
Overview 43
Switching Prescaler Assignment 49
Timer2
Overview 43
Timing Diagrams
A/D Conversion 159
Timer0 45
Timer0 Interrupt Timing 46
Timer0 with External Clock 47
Timing Diagrams and Specifications 148
TMR0 Register 19, 21
TMR1H Register 19
TMR1IE bit 26
TMR1IF bit 27
TMR1L Register 19
TMR2 Register 19
TMR2IE bit 26
TMR2IF bit 27
$\overline{TO}$ bit 23
TRISA Register 20, 22, 31
TRISB 109
TRISB Register 20, 22, 33
TRISC 77, 109
TRISC Register 20, 35, 68
TRISD 109
TRISD Register 36
TRISE 109
TRISE Register 38, 39, 40
Two's Complement 9

U

UV Erasable Devices 7

W

W 108
W Register
ALU 9
Wake-up from SLEEP 117
Watchdog Timer (WDT) 103, 106, 108, 116
WDT 108
Period 116
Programming Considerations 116
Timeout 108

X

XMIT_MODE 78
XT 104, 107

Z

Z bit 23
Zero bit 9

© 1997 Microchip Technology Inc.

List of Equations And Examples

Example 3-1: Instruction Pipeline Flow 15
Example 4-1: Call of a Subroutine in Page 1 from Page 0 30
Example 4-2: Indirect Addressing 30
Example 5-1: Initializing PORTA 31
Example 5-2: Initializing PORTB 33
Example 5-3: Initializing PORTC 35
Example 5-4: Initializing PORTD 36
Example 5-5: Initializing PORTE 38
Example 5-6: Initializing PORTF 39
Example 5-7: Initializing PORTG 40
Example 5-8: Read-Modify-Write Instructions on an I/O Port 41
Example 7-1: Changing Prescaler (Timer0→WDT) 49
Example 7-2: Changing Prescaler (WDT→Timer0) 49
Example 8-1: Reading a 16-bit Free-Running Timer 53
Example 10-1: Changing Between Capture Prescalers 58
Example 10-2: PWM Period and Duty Cycle Calculation ... 60
Example 11-1: Loading the SSPBUF (SSPSR) Register 65
Equation 12-1: A/D Minimum Charging Time 82
Example 12-1: Calculating the Minimum Required Sample Time 82
Example 12-2: Doing an A/D Conversion 84
Example 12-3: 4-bit vs. 8-bit Conversion Times 85
Example 13-1: Static MUX with 32 Segments 100
Example 13-2: 1/3 MUX with 13 Segments 100
Example 14-1: Saving STATUS, W, and PCLATH Registers in RAM 115

List of Figures

Figure 3-1: PIC16C923 Block Diagram 10
Figure 3-2: PIC16C924 Block Diagram 11
Figure 3-3: Clock/Instruction Cycle 15
Figure 4-1: Program Memory Map and Stack 17
Figure 4-2: Register File Map 18
Figure 4-3: Status Register (Address 03h, 83h, 103h, 183h) 23
Figure 4-4: OPTION Register (Address 81h, 181h) 24
Figure 4-5: INTCON Register (Address 0Bh, 8Bh, 10Bh, 18Bh) 25
Figure 4-6: PIE1 Register (Address 8Ch) 26
Figure 4-7: PIR1 Register (Address 0Ch) 27
Figure 4-8: PCON Register (Address 8Eh) 28
Figure 4-9: Loading of PC In Different Situations 29
Figure 4-10: Direct/Indirect Addressing 30
Figure 5-1: Block Diagram of pins RA3:RA0 and RA5 .. 31
Figure 5-2: Block Diagram of RA4/T0CKI Pin 31
Figure 5-3: Block Diagram of RB3:RB0 Pins 33
Figure 5-4: Block Diagram of RB7:RB4 Pins 33
Figure 5-5: PORTC Block Diagram (Peripheral Output Override) 35
Figure 5-6: PORTD<4:0> Block Diagram 36
Figure 5-7: PORTD<7:5> Block Diagram 37
Figure 5-8: PORTE Block Diagram 38
Figure 5-9: PORTF Block Diagram 39
Figure 5-10: PORTG Block Diagram 40
Figure 5-11: Successive I/O Operation 41
Figure 7-1: Timer0 Block Diagram 45
Figure 7-2: Timer0 Timing: Internal Clock/No Prescale 45
Figure 7-3: Timer0 Timing: Internal Clock/Prescale 1:2 46
Figure 7-4: Timer0 Interrupt Timing 46
Figure 7-5: Timer0 Timing with External Clock 47
Figure 7-6: Block Diagram of the Timer0/WDT Prescaler 48
Figure 8-1: T1CON: Timer1 Control Register (Address 10h) 51
Figure 8-2: Timer1 Block Diagram 52
Figure 9-1: Timer2 Block Diagram 55
Figure 9-2: T2CON: Timer2 Control Register (Address 12h) 55
Figure 10-1: CCP1CON Register (Address 17h) 57
Figure 10-2: Capture Mode Operation Block Diagram 58
Figure 10-3: Compare Mode Operation Block Diagram .. 58
Figure 10-4: Simplified PWM Block Diagram 59
Figure 10-5: PWM Output 59
Figure 11-1: SSPSTAT: Sync Serial Port Status Register (Address 94h) 63
Figure 11-2: SSPCON: Sync Serial Port Control Register (Address 14h) 64
Figure 11-3: SSP Block Diagram (SPI Mode) 65
Figure 11-4: SPI Master/Slave Connection 66
Figure 11-5: SPI Mode Timing, Master Mode 67
Figure 11-6: SPI Mode Timing (Slave Mode With CKE = 0) 67
Figure 11-7: SPI Mode Timing (Slave Mode With CKE = 1) 68
Figure 11-8: Start and Stop Conditions 69
Figure 11-9: 7-bit Address Format 70
Figure 11-10: I^2C 10-bit Address Format 70
Figure 11-11: Slave-receiver Acknowledge 70
Figure 11-12: Data Transfer Wait State 70
Figure 11-13: Master-transmitter Sequence 71
Figure 11-14: Master-receiver Sequence 71
Figure 11-15: Combined Format 71
Figure 11-16: Multi-master Arbitration (Two Masters) 72
Figure 11-17: Clock Synchronization 72
Figure 11-18: SSP Block Diagram (I^2C Mode) 73
Figure 11-19: I^2C Waveforms for Reception (7-bit Address) 75
Figure 11-20: I^2C Waveforms for Transmission (7-bit Address) 76
Figure 11-21: Operation of the I^2C Module in IDLE_MODE, RCV_MODE or XMIT_MODE 78
Figure 12-1: ADCON0 Register (Address 1Fh) 79
Figure 12-2: ADCON1 Register (Address 9Fh) 80
Figure 12-3: A/D Block Diagram 81
Figure 12-4: Analog Input Model 82
Figure 12-5: A/D Transfer Function 87
Figure 12-6: Flowchart of A/D Operation 88
Figure 13-1: LCDCON Register (Address 10Fh) 89
Figure 13-2: LCD Module Block Diagram 90
Figure 13-3: LCDPS Register (Address 10Eh) 90
Figure 13-4: Waveforms in Static Drive 91
Figure 13-5: Waveforms in 1/2 MUX, 1/3 Bias Drive 92
Figure 13-6: Waveforms in 1/3 MUX, 1/3 Bias 93
Figure 13-7: Waveforms in 1/4 MUX, 1/3 Bias 94
Figure 13-8: LCD Clock Generation 95
Figure 13-9: Example Waveforms in 1/4 MUX Drive 97
Figure 13-10: Generic LCDD Register Layout 98
Figure 13-11: Sleep Entry/exit When SLPEN = 1 or CS1:CS0 = 00 99
Figure 13-12: LCDSE Register (Address 10Dh) 100
Figure 13-13: Charge Pump and Resistor Ladder 101
Figure 14-1: Configuration Word 103
Figure 14-2: Crystal/Ceramic Resonator Operation (HS, XT or LP OSC Configuration) 104
Figure 14-3: External Clock Input Operation (HS, XT or LP OSC Configuration) 104

© 1997 Microchip Technology Inc.

Figure 14-4: External Parallel Resonant Crystal Oscillator Circuit 105
Figure 14-5: External Series Resonant Crystal Oscillator Circuit 105
Figure 14-6: RC Oscillator Mode 105
Figure 14-7: Simplified Block Diagram of On-chip Reset Circuit 106
Figure 14-8: Time-out Sequence on Power-up ($\overline{MCLR}$ not Tied to VDD): Case 1 111
Figure 14-9: Time-out Sequence on Power-up ($\overline{MCLR}$ Not Tied To VDD): Case 2 111
Figure 14-10: Time-out Sequence on Power-up ($\overline{MCLR}$ Tied to VDD) 111
Figure 14-11: External Power-on Reset Circuit (for Slow VDD Power-up) 112
Figure 14-12: External Brown-out Protection Circuit 1 112
Figure 14-13: External Brown-out Protection Circuit 2 112
Figure 14-14: Interrupt Logic 114
Figure 14-15: INT Pin Interrupt Timing 114
Figure 14-16: Watchdog Timer Block Diagram 116
Figure 14-17: Summary of Watchdog Timer Registers 116
Figure 14-18: Wake-up from Sleep Through Interrupt 118
Figure 14-19: Typical In-Circuit Serial Programming Connection 118
Figure 15-1: General Format for Instructions 119
Figure 17-1: LCD Voltage Waveform 145
Figure 17-2: Load Conditions 147
Figure 17-3: External Clock Timing 148
Figure 17-4: CLKOUT and I/O Timing 149
Figure 17-5: Reset, Watchdog Timer, Oscillator Start-up Timer and Power-up Timer Timing 150
Figure 17-6: Timer0 and Timer1 External Clock Timings 151
Figure 17-7: Capture/Compare/PWM Timings 152
Figure 17-8: SPI Master Mode Timing (CKE = 0) 153
Figure 17-9: SPI Master Mode Timing (CKE = 1) 153
Figure 17-10: SPI Slave Mode Timing (CKE = 0) 154
Figure 17-11: SPI Slave Mode Timing (CKE = 1) 154
Figure 17-12: I^2C Bus Start/Stop Bits Timing 156
Figure 17-13: I^2C Bus Data Timing 157
Figure 17-14: A/D Conversion Timing 159
Figure 18-1: Typical IPD vs. VDD (WDT Disabled, RC Mode @ 25°C) 161
Figure 18-2: Maximum IPD vs. VDD (WDT Disabled, RC Mode -40°C to +85°C) 161
Figure 18-3: Typical IPD vs. VDD (WDT Enabled, RC Mode @ 25°C) 161
Figure 18-4: Maximum IPD vs. VDD (WDT Enabled, RC Mode -40°C to +85°C) 161
Figure 18-5: Typical IPD vs. VDD (LCD on**(1)**, Internal RC**(2)**, RC Mode @ 25°C) 162
Figure 18-6: Maximum IPD vs. VDD (LCD on (32 kHz**(1)**), Internal RC (32 kHz**(2)**), RC Mode -40°C to +85°C) 162
Figure 18-7: Typical IPD vs. VDD (LCD On**(1)**, Timer1 (32 kHz**(2)**), RC Mode @ 25°C) 162
Figure 18-8: Maximum IPD vs. VDD (LCD On**(1)**, Timer1 (32 kHz**(2)**), RC Mode -40°C to +85°C) 162
Figure 18-9: Typical RC Oscillator Frequency vs. VDD 163
Figure 18-10: Typical RC Oscillator Frequency vs. VDD 163
Figure 18-11: Typical RC Oscillator Frequency vs. VDD 163
Figure 18-12: Typical IPD vs. Timer1 Enabled (32 kHz, RC0/RC1 = 33 pF/33 pF, RC Mode) 163
Figure 18-13: Maximum IPD vs. Timer1 Enabled (32 kHz, RC0/RC1 = 33 pF/33 pF, 85°C to -40°C, RC Mode) 163
Figure 18-14: Typical IDD vs. Frequency (RC Mode @ 20 pF, 25°C) 164
Figure 18-15: Maximum IDD vs. Frequency (RC Mode @ 20 pF, -40°C to +85°C) 164
Figure 18-16: Typical IDD vs. Frequency (RC Mode @ 100 pF, 25°C) 165
Figure 18-17: Maximum IDD vs. Frequency (RC Mode @ 100 pF, -40°C to +85°C) 165
Figure 18-18: Typical IDD vs. Frequency (RC Mode @ 300 pF, 25°C) 166
Figure 18-19: Maximum IDD vs. Frequency (RC Mode @ 300 pF, -40°C to +85°C) 166
Figure 18-20: Transconductance(gm) of HS Oscillator vs. VDD 167
Figure 18-21: Transconductance(gm) of LP Oscillator vs. VDD 167
Figure 18-22: Transconductance(gm) of XT Oscillator vs. VDD 167
Figure 18-23: Typical XTAL Startup Time vs. VDD (LP Mode, 25°C) 168
Figure 18-24: Typical XTAL Startup Time vs. VDD (HS Mode, 25°C) 168
Figure 18-25: Typical XTAL Startup Time vs. VDD (XT Mode, 25°C) 168
Figure 18-26: Typical IDD vs. VDD (LP Mode @ 25°C) 168
Figure 18-27: Maximum IDD vs. VDD (LP Mode -40°C to +85°C) 168
Figure 18-28: Typical IDD vs. VDD (XT Mode @ 25°C) 169
Figure 18-29: Maximum IDD vs. VDD (XT Mode -40°C to +85°C) 169
Figure 18-30: Typical IDD vs. VDD (HS Mode @ 25°C) 169
Figure 18-31: Maximum IDD vs. VDD (HS Mode -40°C to +85°C) 169

List of Tables

Table 1-1: PIC16C9XX Family of Devices 6
Table 3-1: PIC16C9XX Pinout Description 12
Table 4-1: Special Function Register Summary 19
Table 5-1: PORTA Functions 32
Table 5-2: Summary of Registers Associated with PORTA 32
Table 5-3: PORTB Functions 34
Table 5-4: Summary of Registers Associated with PORTB 34
Table 5-5: PORTC Functions 35
Table 5-6: Summary of Registers Associated with PORTC 35
Table 5-7: PORTD Functions 37
Table 5-8: Summary of Registers Associated with PORTD 37
Table 5-9: PORTE Functions 38
Table 5-10: Summary of Registers Associated with PORTE 38
Table 5-11: PORTF Functions 39
Table 5-12: Summary of Registers Associated with PORTF 39
Table 5-13: PORTG Functions 40
Table 5-14: Summary of Registers Associated with PORTG 40
Table 7-1: Registers Associated with Timer0 49
Table 8-1: Capacitor Selection for the Timer1 Oscillator 53

© 1997 Microchip Technology Inc.

Table 8-2: Registers Associated with Timer1 as a Timer/counter 54
Table 9-1: Registers Associated with Timer2 as a Timer/Counter 56
Table 10-1: CCP Mode - Timer Resource 57
Table 10-2: Example PWM Frequencies and Resolutions at 8 MHz 60
Table 10-3: Registers Associated with Timer1, Capture and Compare 61
Table 10-4: Registers Associated with PWM and Timer2 61
Table 11-1: Registers Associated with SPI Operation ... 68
Table 11-2: I^2C Bus Terminology 69
Table 11-3: Data Transfer Received Byte Actions 74
Table 11-4: Registers Associated with I^2C Operation 77
Table 12-1: TAD vs. Device Operating Frequencies 83
Table 12-2: Summary of A/D Registers 88
Table 13-1: Frame Frequency Formulas 96
Table 13-2: Approx. Frame Freq in Hz using Timer1 @ 32.768 kHz or Fosc @ 8 MHz 96
Table 13-3: Approx. Frame Freq in Hz using internal RC osc @ 14 kHz 96
Table 13-4: Summary of Registers Associated with the LCD Module 102
Table 14-1: Ceramic Resonators 104
Table 14-2: Capacitor Selection for Crystal Oscillator . 104
Table 14-3: Time-out in Various Situations 107
Table 14-4: Status Bits and Their Significance 108
Table 14-5: Reset Condition for Special Registers 108
Table 14-6: Initialization Conditions for all Registers ... 108
Table 15-1: Opcode Field Descriptions 119
Table 15-2: PIC16CXXX Instruction Set 120
Table 16-1: development tools from microchip 140
Table 17-1: Cross Reference of Device Specs for Oscillator Configurations and Frequencies of Operation (Commercial Devices) 141
Table 17-2: LCD Module Electrical Specifications 145
Table 17-3: VLCD Charge Pump Electrical Specifications 145
Table 17-4: External Clock Timing Requirements 148
Table 17-5: CLKOUT and I/O Timing Requirements ... 149
Table 17-6: Reset, Watchdog Timer, Oscillator Start-up Timer and Power-up Timer Requirements 150
Table 17-7: Timer0 and Timer1 External Clock Requirements 151
Table 17-8: Capture/Compare/PWM Requirements 152
Table 17-9: SPI Mode Requirements 155
Table 17-10: I^2C Bus Start/Stop Bits Requirements 156
Table 17-11: I^2C Bus Data Requirements 157
Table 17-12: A/D Converter Characteristics: PIC16C924-04 (Commercial, Industrial) PIC16LC924-04 (Commercial, Industrial) . 158
Table 17-13: A/D Conversion Requirements 159
Table 18-1: RC Oscillator Frequencies 167

© 1997 Microchip Technology Inc.

ON-LINE SUPPORT

Microchip provides two methods of on-line support. These are the Microchip BBS and the Microchip World Wide Web (WWW) site.

Use Microchip's Bulletin Board Service (BBS) to get current information and help about Microchip products. Microchip provides the BBS communication channel for you to use in extending your technical staff with microcontroller and memory experts.

To provide you with the most responsive service possible, the Microchip systems team monitors the BBS, posts the latest component data and software tool updates, provides technical help and embedded systems insights, and discusses how Microchip products provide project solutions.

The web site, like the BBS, is used by Microchip as a means to make files and information easily available to customers. To view the site, the user must have access to the Internet and a web browser, such as Netscape or Microsoft Explorer. Files are also available for FTP download from our FTP site.

Connecting to the Microchip Internet Web Site

The Microchip web site is available by using your favorite Internet browser to attach to:

www.microchip.com

The file transfer site is available by using an FTP service to connect to:

ftp.mchip.com/biz/mchip

The web site and file transfer site provide a variety of services. Users may download files for the latest Development Tools, Datasheets, Application Notes, User's Guides, Articles and Sample Programs. A variety of Microchip specific business information is also available, including listings of Microchip sales offices, distributors and factory representatives. Other data available for consideration is:

- Latest Microchip Press Releases
- Technical Support Section with Frequently Asked Questions
- Design Tips
- Device Errata
- Job Postings
- Microchip Consultant Program Member Listing
- Links to other useful web sites related to Microchip Products

Connecting to the Microchip BBS

Connect worldwide to the Microchip BBS using either the Internet or the CompuServe® communications network.

Internet:

You can telnet or ftp to the Microchip BBS at the address: **mchipbbs.microchip.com**

CompuServe Communications Network:

When using the BBS via the Compuserve Network, in most cases, a local call is your only expense. The Microchip BBS connection does not use CompuServe membership services, therefore you do not need CompuServe membership to join Microchip's BBS. There is no charge for connecting to the Microchip BBS.

The procedure to connect will vary slightly from country to country. Please check with your local CompuServe agent for details if you have a problem. CompuServe service allow multiple users various baud rates depending on the local point of access.

The following connect procedure applies in most locations.

1. Set your modem to 8-bit, No parity, and One stop (8N1). This is not the normal CompuServe setting which is 7E1.
2. Dial your local CompuServe access number.
3. Depress the <Enter> key and a garbage string will appear because CompuServe is expecting a 7E1 setting.
4. Type +, depress the <Enter> key and “Host Name:” will appear.
5. Type MCHIPBBS, depress the <Enter> key and you will be connected to the Microchip BBS.

In the United States, to find CompuServe's phone number closest to you, set your modem to 7E1 and dial (800) 848-4480 for 300-2400 baud or (800) 331-7166 for 9600-14400 baud connection. After the system responds with “Host Name:”, type NETWORK, depress the <Enter> key and follow CompuServe's directions.

For voice information (or calling from overseas), you may call (614) 723-1550 for your local CompuServe number.

Microchip regularly uses the Microchip BBS to distribute technical information, application notes, source code, errata sheets, bug reports, and interim patches for Microchip systems software products. For each SIG, a moderator monitors, scans, and approves or disapproves files submitted to the SIG. No executable files are accepted from the user community in general to limit the spread of computer viruses.

Systems Information and Upgrade Hot Line

The Systems Information and Upgrade Line provides system users a listing of the latest versions of all of Microchip's development systems software products. Plus, this line provides information on how customers can receive any currently available upgrade kits.The Hot Line Numbers are:

1-800-755-2345 for U.S. and most of Canada, and

1-602-786-7302 for the rest of the world.

Trademarks: The Microchip name, logo, PIC, PICSTART, PICMASTER and PRO MATE are registered trademarks of Microchip Technology Incorporated in the U.S.A. and other countries. PICmicro, ICSP, MPLAB and *fuzzy*LAB are trademarks and SQTP is a service mark of Microchip in the U.S.A.

*fuzzy*TECH is a registered trademark of Inform Software Corporation. IBM, IBM PC-AT are registered trademarks of International Business Machines Corp. Pentium is a trademark of Intel Corporation. Windows is a trademark and MS-DOS, Microsoft Windows are registered trademarks of Microsoft Corporation. CompuServe is a registered trademark of CompuServe Incorporated.

All other trademarks mentioned herein are the property of their respective companies.

READER RESPONSE

It is our intention to provide you with the best documentation possible to ensure successful use of your Microchip product. If you wish to provide your comments on organization, clarity, subject matter, and ways in which our documentation can better serve you, please FAX your comments to the Technical Publications Manager at (602) 786-7578.

Please list the following information, and use this outline to provide us with your comments about this Data Sheet.

To: Technical Publications Manager Total Pages Sent

RE: Reader Response

From: Name _____

Company _____

Address _____

City / State / ZIP / Country _____

Telephone: (_____) _____ - _____ FAX: (_____) _____ - _____

Application (optional):

Would you like a reply? ___Y ___N

Device: **PIC16C9XX** Literature Number: **DS30444E**

Questions:

1. What are the best features of this document?

_____

_____

2. How does this document meet your hardware and software development needs?

_____

_____

3. Do you find the organization of this data sheet easy to follow? If not, why?

_____

_____

4. What additions to the data sheet do you think would enhance the structure and subject?

_____

_____

5. What deletions from the data sheet could be made without affecting the overall usefulness?

_____

_____

6. Is there any incorrect or misleading information (what and where)?

_____

_____

7. How would you improve this document?

_____

_____

8. How would you improve our software, systems, and silicon products?

_____

_____

© 1997 Microchip Technology Inc.

PIC16C9XX PRODUCT IDENTIFICATION SYSTEM

To order or obtain information, e.g., on pricing or delivery refer to the factory or the listed sales office.

PART NO. -XX X /XX XXX

Pattern:	QTP, SQTP, ROM Code or Special Requirements	
Package:	SP	= 64-pin Shrink PDIP
	PT	= TQFP
	CL	= 68-pin Windowed CERQUAD
	L	= PLCC
Temperature Range:	-	= 0°C to +70°C (T for Tape/Reel)
	I	= -40°C to +85°C (S for Tape/Reel)
Frequency Range:	04	= 200 kHz (PIC16C9XX-04)
	04	= 4 MHz
	08	= 8 MHz
Device	PIC16C9XX	:VDD range 4.0V to 6.0V
	PIC16C9XXT	:VDD range 4.0V to 6.0V (Tape/Reel)
	PIC16LC9XX	:VDD range 2.5V to 6.0V
	PIC16LC9XT	:VDD range 2.5V to 6.0V (Tape/Reel)

Examples

a) PIC16C924 - 04/P 301 Commercial Temp., PDIP Package, 4 MHz, normal VDD limits, QTP pattern #301

b) PIC16LC923 - 04/PT Commercial Temp., TQFP package, 4 MHz, extended VDD limits

c) PIC16C923 - 08I/CL Industrial Temp., Windowed CERQUAD package, 8 MHz, normal VDD limits

* CL Devices are UV erasable and can be programmed to any device configuration. CL Devices meet the electrical requirement of each oscillator type (including LC devices).

Sales and Support

Products supported by a preliminary Data Sheet may possibly have an errata sheet describing minor operational differences and recommended workarounds. To determine if an errata sheet exists for a particular device, please contact one of the following:

1. Your local Microchip sales office (see below)
2. The Microchip Corporate Literature Center U.S. FAX: (602) 786-7277
3. The Microchip's Bulletin Board, via your local CompuServe number (CompuServe membership NOT required).

Please specify which device, revision of silicon and Data Sheet (include Literature #) you are using.
For latest version information and upgrade kits for Microchip Development Tools, please call 1-800-755-2345 or 1-602-786-7302.

Note the following details of the code protection feature on PICmicro® MCUs.

- The PICmicro family meets the specifications contained in the Microchip Data Sheet.
- Microchip believes that its family of PICmicro microcontrollers is one of the most secure products of its kind on the market today, when used in the intended manner and under normal conditions.
- There are dishonest and possibly illegal methods used to breach the code protection feature. All of these methods, to our knowledge, require using the PICmicro microcontroller in a manner outside the operating specifications contained in the data sheet. The person doing so may be engaged in theft of intellectual property.
- Microchip is willing to work with the customer who is concerned about the integrity of their code.
- Neither Microchip nor any other semiconductor manufacturer can guarantee the security of their code. Code protection does not mean that we are guaranteeing the product as “unbreakable”.
- Code protection is constantly evolving. We at Microchip are committed to continuously improving the code protection features of our product.

If you have any further questions about this matter, please contact the local sales office nearest to you.

Information contained in this publication regarding device applications and the like is intended through suggestion only and may be superseded by updates. It is your responsibility to ensure that your application meets with your specifications. No representation or warranty is given and no liability is assumed by Microchip Technology Incorporated with respect to the accuracy or use of such information, or infringement of patents or other intellectual property rights arising from such use or otherwise. Use of Microchip’s products as critical components in life support systems is not authorized except with express written approval by Microchip. No licenses are conveyed, implicitly or otherwise, under any intellectual property rights.

Trademarks

The Microchip name and logo, the Microchip logo, FilterLab, KEELOQ, microID, MPLAB, PIC, PICmicro, PICMASTER, PICSTART, PRO MATE, SEEVAL and The Embedded Control Solutions Company are registered trademarks of Microchip Technology Incorporated in the U.S.A. and other countries.

dsPIC, ECONOMONITOR, FanSense, FlexROM, fuzzyLAB, In-Circuit Serial Programming, ICSP, ICEPIC, microPort, Migratable Memory, MPASM, MPLIB, MPLINK, MPSIM, MXDEV, PICC, PICDEM, PICDEM.net, rfPIC, Select Mode and Total Endurance are trademarks of Microchip Technology Incorporated in the U.S.A.

Serialized Quick Turn Programming (SQTP) is a service mark of Microchip Technology Incorporated in the U.S.A.

All other trademarks mentioned herein are property of their respective companies.

© 2002, Microchip Technology Incorporated, Printed in the U.S.A., All Rights Reserved.

Printed on recycled paper.

DNV Certification, Inc. USA
ANSI • RAB QMS ACCREDITED
DNV MSC The Netherlands Accredited by the RvA
DNV
ISO 9001 / QS-9000 REGISTERED FIRM

Microchip received QS-9000 quality system certification for its worldwide headquarters, design and wafer fabrication facilities in Chandler and Tempe, Arizona in July 1999. The Company’s quality system processes and procedures are QS-9000 compliant for its PICmicro® 8-bit MCUs, KEELOQ® code hopping devices, Serial EEPROMs and microperipheral products. In addition, Microchip’s quality system for the design and manufacture of development systems is ISO 9001 certified.

WORLDWIDE SALES AND SERVICE

AMERICAS

Corporate Office
2355 West Chandler Blvd.
Chandler, AZ 85224-6199
Tel: 480-792-7200 Fax: 480-792-7277
Technical Support: 480-792-7627
Web Address: http://www.microchip.com

Rocky Mountain
2355 West Chandler Blvd.
Chandler, AZ 85224-6199
Tel: 480-792-7966 Fax: 480-792-7456

Atlanta
500 Sugar Mill Road, Suite 200B
Atlanta, GA 30350
Tel: 770-640-0034 Fax: 770-640-0307

Boston
2 Lan Drive, Suite 120
Westford, MA 01886
Tel: 978-692-3848 Fax: 978-692-3821

Chicago
333 Pierce Road, Suite 180
Itasca, IL 60143
Tel: 630-285-0071 Fax: 630-285-0075

Dallas
4570 Westgrove Drive, Suite 160
Addison, TX 75001
Tel: 972-818-7423 Fax: 972-818-2924

Detroit
Tri-Atria Office Building
32255 Northwestern Highway, Suite 190
Farmington Hills, MI 48334
Tel: 248-538-2250 Fax: 248-538-2260

Kokomo
2767 S. Albright Road
Kokomo, Indiana 46902
Tel: 765-864-8360 Fax: 765-864-8387

Los Angeles
18201 Von Karman, Suite 1090
Irvine, CA 92612
Tel: 949-263-1888 Fax: 949-263-1338

New York
150 Motor Parkway, Suite 202
Hauppauge, NY 11788
Tel: 631-273-5305 Fax: 631-273-5335

San Jose
Microchip Technology Inc.
2107 North First Street, Suite 590
San Jose, CA 95131
Tel: 408-436-7950 Fax: 408-436-7955

Toronto
6285 Northam Drive, Suite 108
Mississauga, Ontario L4V 1X5, Canada
Tel: 905-673-0699 Fax: 905-673-6509

ASIA/PACIFIC

Australia
Microchip Technology Australia Pty Ltd
Suite 22, 41 Rawson Street
Epping 2121, NSW
Australia
Tel: 61-2-9868-6733 Fax: 61-2-9868-6755

China - Beijing
Microchip Technology Consulting (Shanghai) Co., Ltd., Beijing Liaison Office
Unit 915
Bei Hai Wan Tai Bldg.
No. 6 Chaoyangmen Beidajie
Beijing, 100027, No. China
Tel: 86-10-85282100 Fax: 86-10-85282104

China - Chengdu
Microchip Technology Consulting (Shanghai) Co., Ltd., Chengdu Liaison Office
Rm. 2401, 24th Floor,
Ming Xing Financial Tower
No. 88 TIDU Street
Chengdu 610016, China
Tel: 86-28-6766200 Fax: 86-28-6766599

China - Fuzhou
Microchip Technology Consulting (Shanghai) Co., Ltd., Fuzhou Liaison Office
Unit 28F, World Trade Plaza
No. 71 Wusi Road
Fuzhou 350001, China
Tel: 86-591-7503506 Fax: 86-591-7503521

China - Shanghai
Microchip Technology Consulting (Shanghai) Co., Ltd.
Room 701, Bldg. B
Far East International Plaza
No. 317 Xian Xia Road
Shanghai, 200051
Tel: 86-21-6275-5700 Fax: 86-21-6275-5060

China - Shenzhen
Microchip Technology Consulting (Shanghai) Co., Ltd., Shenzhen Liaison Office
Rm. 1315, 13/F, Shenzhen Kerry Centre,
Renminnan Lu
Shenzhen 518001, China
Tel: 86-755-2350361 Fax: 86-755-2366086

Hong Kong
Microchip Technology Hongkong Ltd.
Unit 901-6, Tower 2, Metroplaza
223 Hing Fong Road
Kwai Fong, N.T., Hong Kong
Tel: 852-2401-1200 Fax: 852-2401-3431

India
Microchip Technology Inc.
India Liaison Office
Divyasree Chambers
1 Floor, Wing A (A3/A4)
No. 11, O'Shaugnessey Road
Bangalore, 560 025, India
Tel: 91-80-2290061 Fax: 91-80-2290062

Japan
Microchip Technology Japan K.K.
Benex S-1 6F
3-18-20, Shinyokohama
Kohoku-Ku, Yokohama-shi
Kanagawa, 222-0033, Japan
Tel: 81-45-471- 6166 Fax: 81-45-471-6122

Korea
Microchip Technology Korea
168-1, Youngbo Bldg. 3 Floor
Samsung-Dong, Kangnam-Ku
Seoul, Korea 135-882
Tel: 82-2-554-7200 Fax: 82-2-558-5934

Singapore
Microchip Technology Singapore Pte Ltd.
200 Middle Road
#07-02 Prime Centre
Singapore, 188980
Tel: 65-6334-8870 Fax: 65-6334-8850

Taiwan
Microchip Technology Taiwan
11F-3, No. 207
Tung Hua North Road
Taipei, 105, Taiwan
Tel: 886-2-2717-7175 Fax: 886-2-2545-0139

EUROPE

Denmark
Microchip Technology Nordic ApS
Regus Business Centre
Lautrup hoj 1-3
Ballerup DK-2750 Denmark
Tel: 45 4420 9895 Fax: 45 4420 9910

France
Microchip Technology SARL
Parc d'Activite du Moulin de Massy
43 Rue du Saule Trapu
Batiment A - ler Etage
91300 Massy, France
Tel: 33-1-69-53-63-20 Fax: 33-1-69-30-90-79

Germany
Microchip Technology GmbH
Gustav-Heinemann Ring 125
D-81739 Munich, Germany
Tel: 49-89-627-144 0 Fax: 49-89-627-144-44

Italy
Microchip Technology SRL
Centro Direzionale Colleoni
Palazzo Taurus 1 V. Le Colleoni 1
20041 Agrate Brianza
Milan, Italy
Tel: 39-039-65791-1 Fax: 39-039-6899883

United Kingdom
Arizona Microchip Technology Ltd.
505 Eskdale Road
Winnersh Triangle
Wokingham
Berkshire, England RG41 5TU
Tel: 44 118 921 5869 Fax: 44-118 921-5820

03/01/02

© 2002 Microchip Technology Inc.

Компания «ЭлектроПласт» предлагает заключение долгосрочных отношений при поставках импортных электронных компонентов на взаимовыгодных условиях!

Наши преимущества:

- Оперативные поставки широкого спектра электронных компонентов отечественного и импортного производства напрямую от производителей и с крупнейших мировых складов;
- Поставка более 17-ти миллионов наименований электронных компонентов;
- Поставка сложных, дефицитных, либо снятых с производства позиций;
- Оперативные сроки поставки под заказ (от 5 рабочих дней);
- Экспресс доставка в любую точку России;
- Техническая поддержка проекта, помощь в подборе аналогов, поставка прототипов;
- Система менеджмента качества сертифицирована по Международному стандарту ISO 9001;
- Лицензия ФСБ на осуществление работ с использованием сведений, составляющих государственную тайну;
- Поставка специализированных компонентов (Xilinx, Altera, Analog Devices, Intersil, Interpoint, Microsemi, Aeroflex, Peregrine, Syfer, Eurofarad, Texas Instrument, Miteq, Cobham, E2V, MA-COM, Hittite, Mini-Circuits,General Dynamics и др.);

Помимо этого, одним из направлений компании «ЭлектроПласт» является направление «Источники питания». Мы предлагаем Вам помощь Конструкторского отдела:

- Подбор оптимального решения, техническое обоснование при выборе компонента;
- Подбор аналогов;
- Консультации по применению компонента;
- Поставка образцов и прототипов;
- Техническая поддержка проекта;
- Защита от снятия компонента с производства.

Как с нами связаться

Телефон: 8 (812) 309 58 32 (многоканальный)
Факс: 8 (812) 320-02-42
Электронная почта: org@eplast1.ru
Адрес: 198099, г. Санкт-Петербург, ул. Калинина, дом 2, корпус 4, литера А.