MIC94064/5

High Side Power Switches

General Description

The MIC94064 and MIC94065 are high-side load switches designed for operation between 1.7V to 5.5V. The devices contain a low on-resistance P-channel MOSFET that supports over 2A of continuous current.

The MIC94064/5 provides a slew rate controlled Soft-Start turn-on of 115µs (typical) to prevent in-rush current from glitching supply rails.

The MIC94065 features an active load discharge circuit which insures capacitive loads retain no charge when the main switch is in an OFF state.

An active pull-down on the enable input keeps MIC94064/5 in a default OFF state until the EN pin is pulled to a high level. Built-in level shift circuitry allows low voltage logic signals to switch higher supply voltages, or vice versa; high level logic signals can control low level voltages.

The MIC94064/5's operating voltage range makes them suitable for 1-cell Lithium ion and 2- to 3-cell NiMH/NiCad/Alkaline powered systems, as well as all 5V applications. Their low operating current of 2µA and low shutdown current of <1µA maximize battery life.

Data sheets and support documentation can be found on Micrel's web site at: www.micrel.com.

Features

- 1.7V to 5.5V input voltage range
- 2A continuous operating current
- 77mΩ (typ) R_{DSON}
- Built-in level shift for control logic; can be operated by 1.5V logic.
- Low 2µA quiescent current
- Soft-Start: 115µs
- Micro-power shutdown <1µA
- Load discharge circuit: MIC94065
- Space saving 1.2x1.6 mm Thin MLF® package

Applications

- Load switch in portable applications:
  - Cellular phones
  - PDAs
  - MP3 players
  - Digital Cameras
  - Portable instrumentation
- Battery switch-over circuits
- Level translator

Typical Application

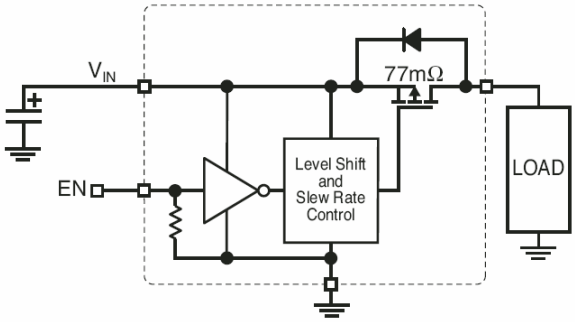

MIC94064
Load Switch Application

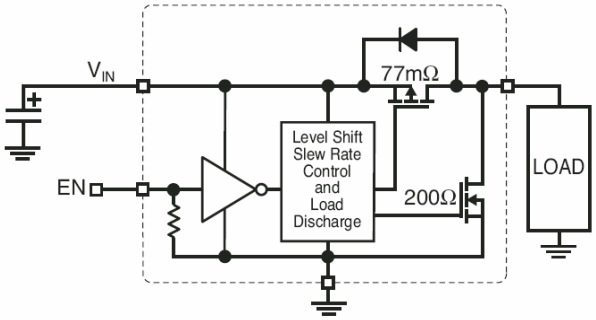

MIC94065
Load Switch with Capacitive Load Discharge

MLF and *Micro*LeadFrame are registered trademarks of Amkor Technologies, Inc.

Micrel Inc. • 2180 Fortune Drive • San Jose, CA 95131 • USA • tel +1 (408) 944-0800 • fax + 1 (408) 474-1000 • http://www.micrel.com

Ordering Information

Part Number		Part Marking[1]		Soft-Start	Load Discharge	Package
Standard	Pb-Free	Standard	Pb-Free			
—	MIC94064YC6[1]	—	64P	•		SC-70-6
—	MIC94065YC6[1]	—	6P5	•	•	
—	MIC94064YMT	—	P64	•		1.2mm x 1.6mm Thin MLF®
—	MIC94065YMT	—	P65	•	•	

Notes

1. Underbar symbol on SC-70 Pb-free packages may not be to scale.

Pin Configuration

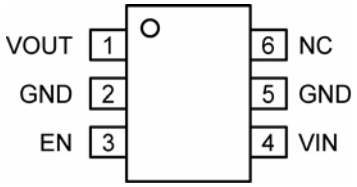

SC-70-6 (C6)

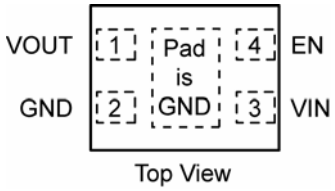

1.2x1.6 mm Thin MLF® (MT)

Pin Description

Pin Number		Pin Name	Pin Function
SC-70	MLF		
1	1	V_{OUT}	Drain of P-channel MOSFET.
2,5	2	GND	Ground and the backside pad (MLF only) should both be connected to electrical ground.
4	3	V_{IN}	Source of P-channel MOSFET.
3	4	EN	Enable (Input): Active-high CMOS compatible control input for switch A. Do not leave floating.
6	--	NIC	No Internal Connection. A signal or voltage applied to this pin will have no effect on device operation.

Absolute Maximum Ratings [1]

Input Voltage (V_{IN}) ..... +6V
Enable Voltage (V_{EN}) ..... +6V
Continuous Drain Current (I_D) [3]
  T_A = 25°C ..... ±2A
  T_A = 85°C ..... ±1.4A
Pulsed Drain Current (I_{DP}) [4] ..... ±6A
Continuous Diode Current (I_S) [4] ..... –50mA
Storage Temperature (T_s) ..... –55°C to +150°C
EDS Rating – HBM [6] 4KV

Operating Ratings [2]

Input Voltage (V_{IN}) ..... +1.7 to +5.5V
Junction Temperature (T_A) ..... –40°C to +125°C
Package Thermal Resistance
  SC-70-6 (θ_{JA}) ..... 240°C/W
  1.2x1.6 MLF® (θ_{JA}) ..... 172°C/W
  1.2x1.6 MLF® (θ_{JC}) [3] ..... 134°C/W

Electrical Characteristics

V_{IN} = 5V; T_A = 25°C, bold values indicate –40°C ≤ T_A ≤ +85°C, unless noted.

Symbol	Parameter	Condition	Min	Typ	Max	Units
V_{EN_TH}	Enable Threshold Voltage	V_{IN} = 1.8V to 4.5V, I_D = –250µA	0.5		1.2	V
		V_{IN} = 1.7V to 4.5V, I_D = –250µA	0.4		1.2	V
I_{EN}	Enable Input Current	V_{IN} = V_{EN} = 5.5V		2	4	µA
I_{VIN}	OFF State Leakage Current	V_{IN} = +5.5V, V_{EN} = 0V			1	µA
$R_{DS(ON)}$	P-Channel Drain to Source ON Resistance	V_{IN} = +4.5V, ID = –100mA, V_{EN} = 1.5V		77	110	mΩ
		V_{IN} = +3.6V, ID = –100mA, V_{EN} = 1.5V		85	115	mΩ
	SC-70 Package	V_{IN} = +2.5V, ID = –100mA, V_{EN} = 1.5V		100	140	mΩ
		V_{IN} = +1.8V, ID = –100mA, V_{EN} = 1.5V		145	200	mΩ
		V_{IN} = +1.7V, ID = –100mA, V_{EN} = 1.5V		155	215	mΩ
$R_{DS(ON)}$	P-Channel Drain to Source ON Resistance	V_{IN} = +4.5V, ID = –100mA, V_{EN} = 1.5V		85	115	mΩ
		V_{IN} = +3.6V, ID = –100mA, V_{EN} = 1.5V		100	140	mΩ
	MLF Package	V_{IN} = +2.5V, ID = –100mA, V_{EN} = 1.5V		145	200	mΩ
		V_{IN} = +1.8V, ID = –100mA, V_{EN} = 1.5V		155	215	mΩ
		V_{IN} = +1.7V, ID = –100mA, V_{EN} = 1.5V		165	225	mΩ
$R_{SHUTDOWN}$	Turn-Off Resistance	V_{IN} = +3.6V, I_{TEST} = 1mA, V_{EN} = 0V MIC94065		200	300	Ω

Dynamic

Symbol	Parameter	Condition	Min	Typ	Max	Units
t_{ON_DLY}	Turn-On Delay Time	V_{IN} = +3.6V, ID = –100mA, V_{EN} = 1.5V	80	125	170	µs
t_{ON_RISE}	Turn-On Rise Time	V_{IN} = +3.6V, ID = –100mA, V_{EN} = 1.5V	75	115	150	µs
t_{OFF_DLY}	Turn-Off Delay Time	V_{IN} = +3.6V, ID = –100mA, V_{EN} = 1.5V		100	200	ns
t_{OFF_FALL}	Turn-Off Fall Time	V_{IN} = +3.6V, ID = –100mA, V_{EN} = 1.5V		25	100	ns

Notes:

1. Exceeding the absolute maximum rating may damage the device.
2. The device is not guaranteed to function outside its operating rating.
3. With backside thermal contact to PCB.
4. Pulse width <300µs with < 2% duty cycle.
5. Continuous body diode current conduction (reverse conduction, i.e. V_{OUT} to V_{IN}) is not recommended.
6. Devices are ESD sensitive. Handling precautions recommended. HBM (Human body model), 1.5k in series with 100pF.

Typical Characteristics

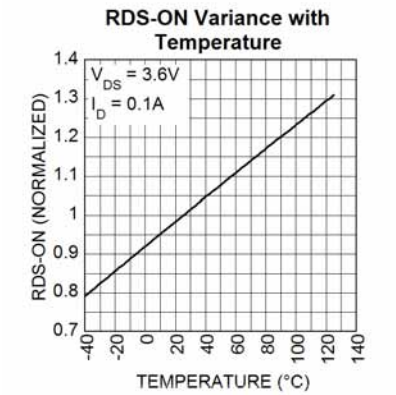

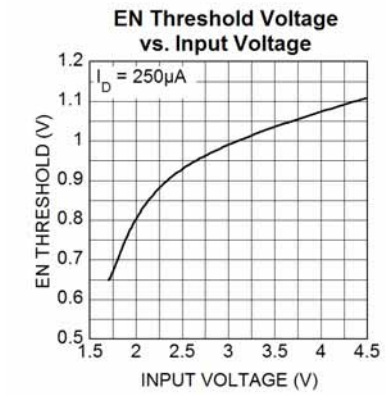

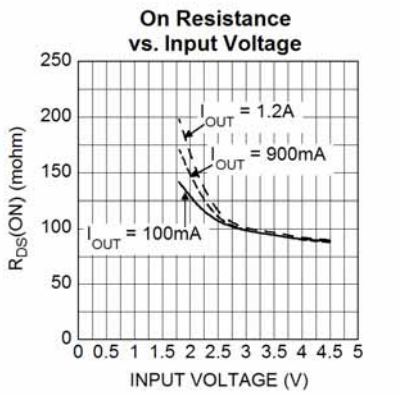

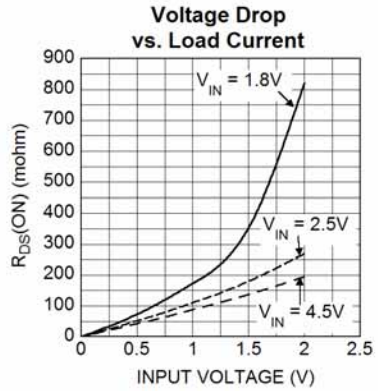

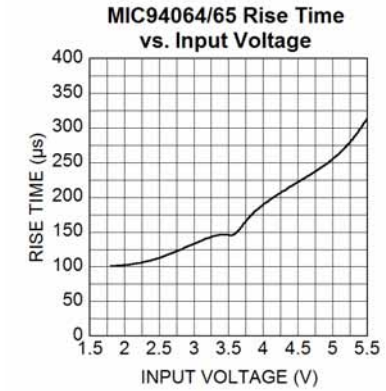

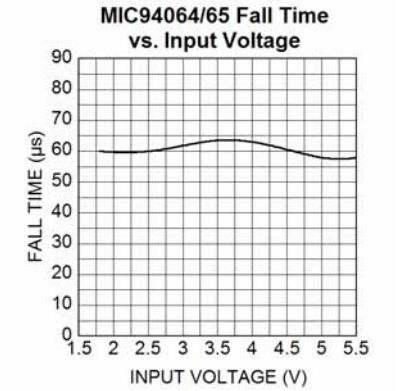

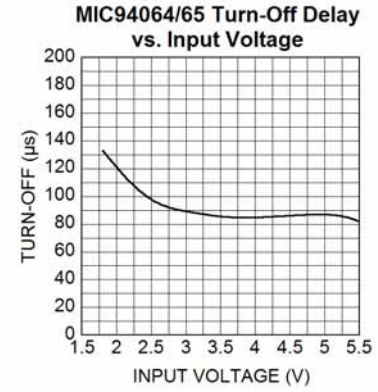

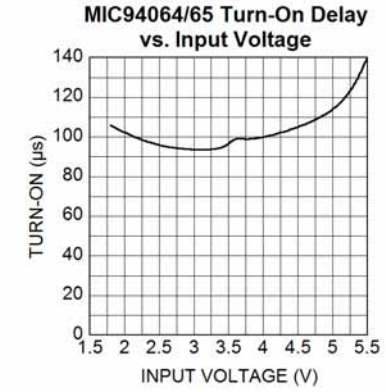

Functional Characteristics

MIC94064

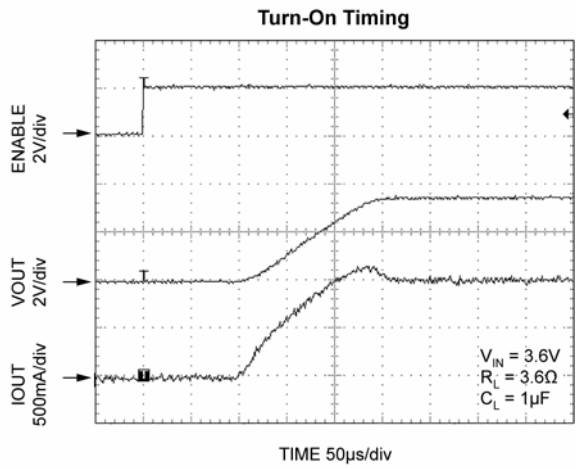

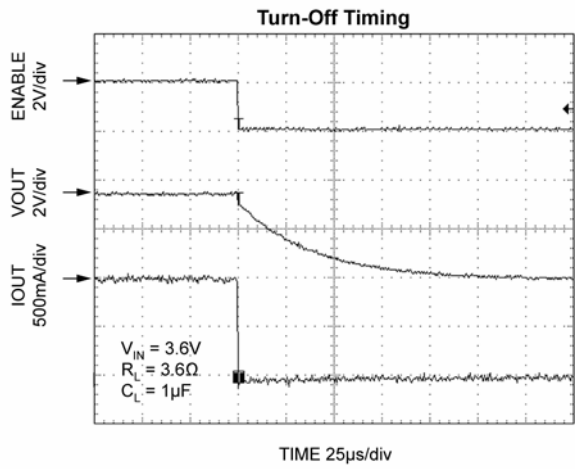

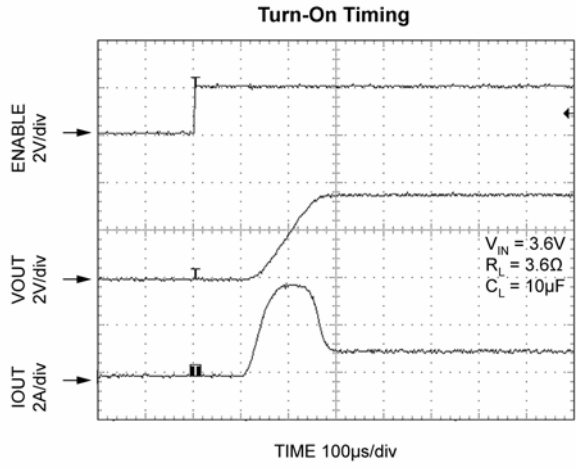

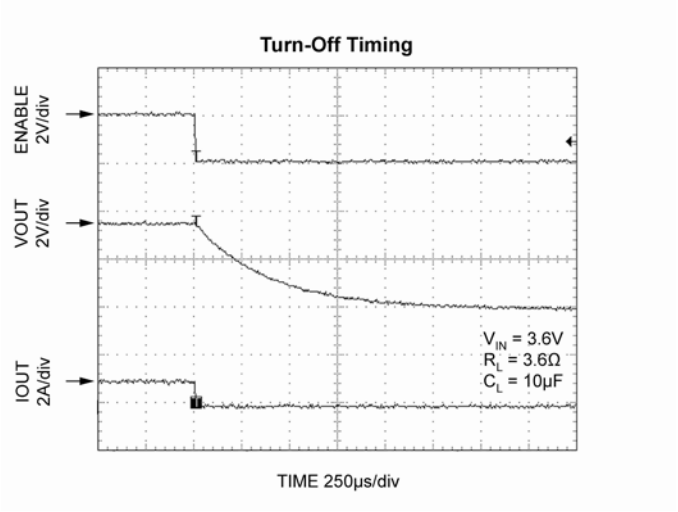

MIC94065

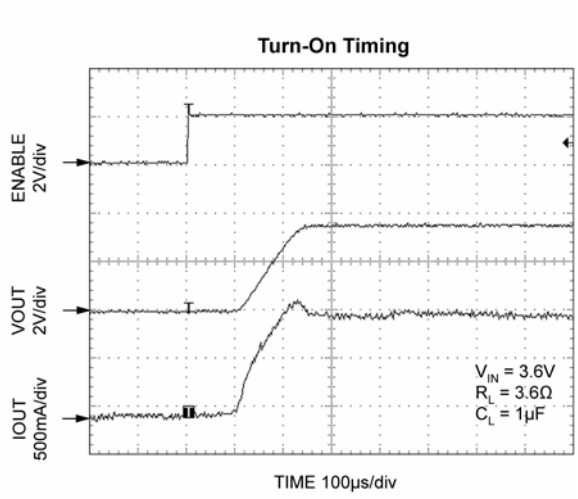
Turn-On Timing
ENABLE 2V/div
VOUT 2V/div
IOUT 500mA/div
V_{IN} = 3.6V
R_L = 3.6Ω
C_L = 1µF
TIME 100µs/div

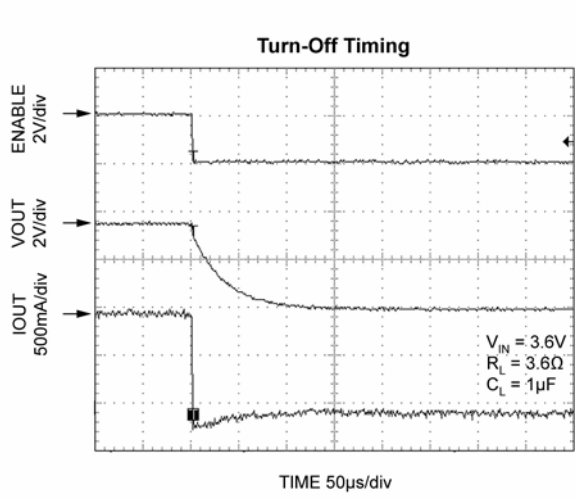
Turn-Off Timing
ENABLE 2V/div
VOUT 2V/div
IOUT 500mA/div
V_{IN} = 3.6V
R_L = 3.6Ω
C_L = 1µF
TIME 50µs/div

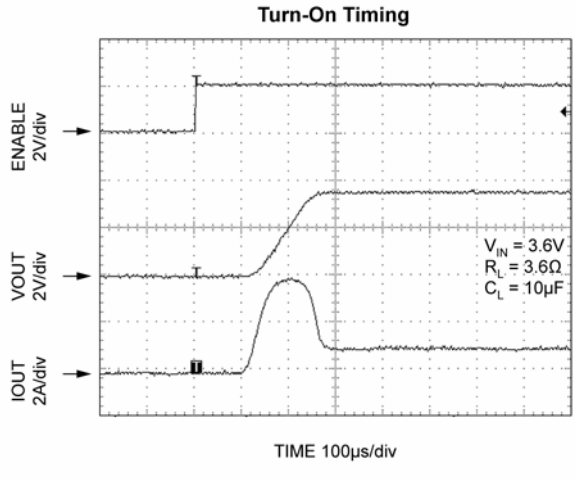
Turn-On Timing
ENABLE 2V/div
VOUT 2V/div
IOUT 2A/div
V_{IN} = 3.6V
R_L = 3.6Ω
C_L = 10µF
TIME 100µs/div

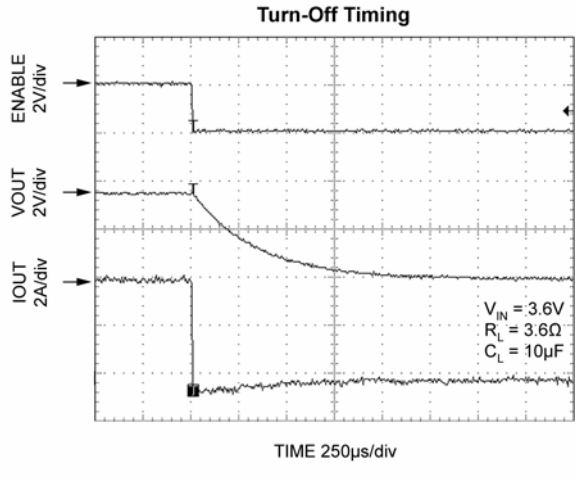
Turn-Off Timing
ENABLE 2V/div
VOUT 2V/div
IOUT 2A/div
V_{IN} = 3.6V
R_L = 3.6Ω
C_L = 10µF
TIME 250µs/div

Package Information

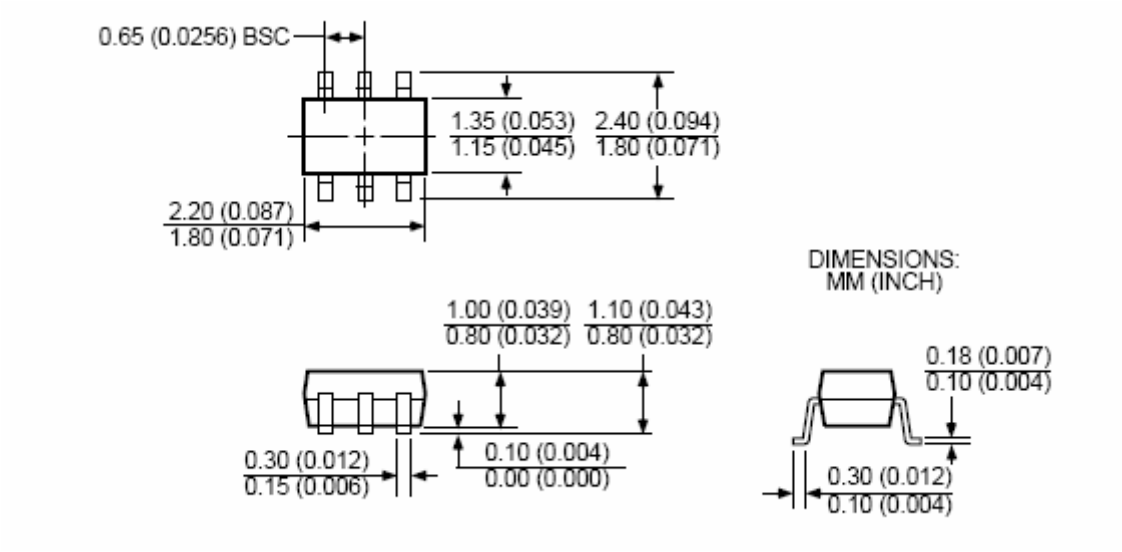

6-Pin SC-70 (C6)

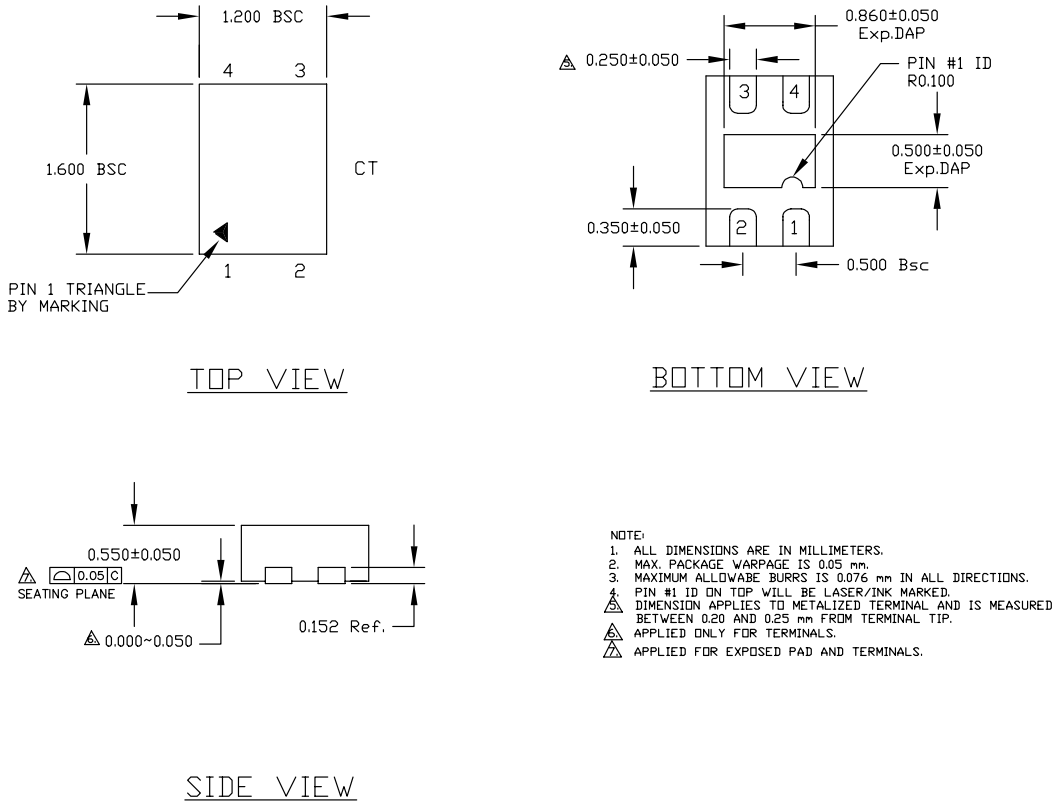

4-Pin Thin MLF® (MT)

Recommended Land Pattern for MLF® 1.2x1.6 4 Lead

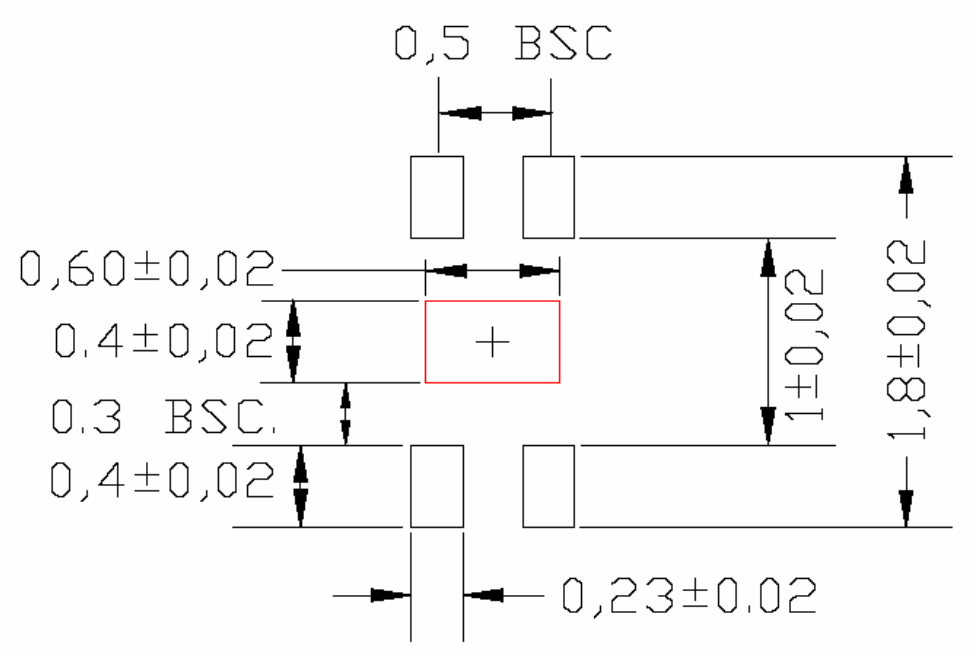

Optional for maximum thermal performance, heatsink should be connected to GND plane of PCB for maximum thermal performance.

Disclaimer: This is only a recommendation based on information available to Micrel from its suppliers. Actual land pattern may have to be significantly different due to various materials and processes used in PCB assembly. Micrel makes no representation or warranty of performance based on the recommended land pattern."

MICREL, INC. 2180 FORTUNE DRIVE SAN JOSE, CA 95131 USA
TEL +1 (408) 944-0800 FAX +1 (408) 474-1000 WEB http://www.micrel.com

The information furnished by Micrel in this data sheet is believed to be accurate and reliable. However, no responsibility is assumed by Micrel for its use. Micrel reserves the right to change circuitry and specifications at any time without notification to the customer.

Micrel Products are not designed or authorized for use as components in life support appliances, devices or systems where malfunction of a product can reasonably be expected to result in personal injury. Life support devices or systems are devices or systems that (a) are intended for surgical implant into the body or (b) support or sustain life, and whose failure to perform can be reasonably expected to result in a significant injury to the user. A Purchaser's use or sale of Micrel Products for use in life support appliances, devices or systems is a Purchaser's own risk and Purchaser agrees to fully indemnify Micrel for any damages resulting from such use or sale.

© 2008 Micrel, Incorporated.

Компания «ЭлектроПласт» предлагает заключение долгосрочных отношений при поставках импортных электронных компонентов на взаимовыгодных условиях!

Наши преимущества:

- Оперативные поставки широкого спектра электронных компонентов отечественного и импортного производства напрямую от производителей и с крупнейших мировых складов;
- Поставка более 17-ти миллионов наименований электронных компонентов;
- Поставка сложных, дефицитных, либо снятых с производства позиций;
- Оперативные сроки поставки под заказ (от 5 рабочих дней);
- Экспресс доставка в любую точку России;
- Техническая поддержка проекта, помощь в подборе аналогов, поставка прототипов;
- Система менеджмента качества сертифицирована по Международному стандарту ISO 9001;
- Лицензия ФСБ на осуществление работ с использованием сведений, составляющих государственную тайну;
- Поставка специализированных компонентов (Xilinx, Altera, Analog Devices, Intersil, Interpoint, Microsemi, Aeroflex, Peregrine, Syfer, Eurofarad, Texas Instrument, Miteq, Cobham, E2V, MA-COM, Hittite, Mini-Circuits,General Dynamics и др.);

Помимо этого, одним из направлений компании «ЭлектроПласт» является направление «Источники питания». Мы предлагаем Вам помощь Конструкторского отдела:

- Подбор оптимального решения, техническое обоснование при выборе компонента;
- Подбор аналогов;
- Консультации по применению компонента;
- Поставка образцов и прототипов;
- Техническая поддержка проекта;
- Защита от снятия компонента с производства.

Как с нами связаться

Телефон: 8 (812) 309 58 32 (многоканальный)
Факс: 8 (812) 320-02-42
Электронная почта: org@eplast1.ru
Адрес: 198099, г. Санкт-Петербург, ул. Калинина, дом 2, корпус 4, литера А.