Data Sheet
November 22, 2010

12V Pico TLynx™ 6A: Non-Isolated DC-DC Power Modules
4.5Vdc –14Vdc input; 0.59Vdc to 5.5Vdc output; 6A Output Current

RoHS Compliant **EZ-SEQUENCE™**

Applications

- Distributed power architectures
- Intermediate bus voltage applications
- Telecommunications equipment
- Servers and storage applications
- Networking equipment
- Industrial equipment

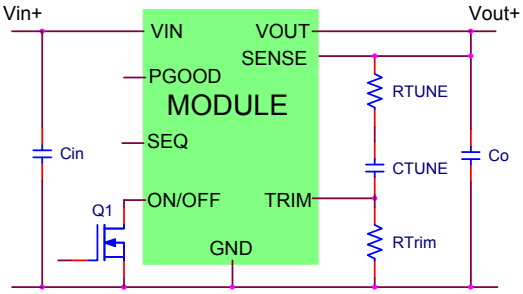

Features

- Compliant to RoHS EU Directive 2002/95/EC (Z versions)
- Compatible in a Pb-free or SnPb reflow environment (Z versions)
- Wide Input voltage range (4.5Vdc-14Vdc)
- Output voltage programmable from 0.59Vdc to 5.5Vdc via external resistor
- Tunable Loop™ to optimize dynamic output voltage response
- Flexible output voltage sequencing EZ-SEQUENCE (APTS versions)
- Remote sense
- Power Good signal
- Fixed switching frequency
- Output overcurrent protection (non-latching)
- Overtemperature protection
- Remote On/Off
- Ability to sink and source current
- Cost efficient open frame design
- Small size: 12.2 mm x 12.2 mm x 7.25 mm (0.48 in x 0.48 in x 0.29 in)
- Wide operating temperature range [-40°C to 105°C(Ruggedized: -D), 85°C(Regular)]
- Ruggedized (-D) version able to withstand high levels of shock and vibration
- *UL** 60950-1Recognized, *CSA*† C22.2 No. 60950-1-03 Certified, and *VDE*‡ 0805:2001-12 (EN60950-1) Licensed
- ISO** 9001 and ISO 14001 certified manufacturing facilities

Description

The 12V Pico TLynx™ 6A power modules are non-isolated dc-dc converters that can deliver up to 6A of output current. These modules operate over a wide range of input voltage (V_{IN} = 4.5Vdc-14Vdc) and provide a precisely regulated output voltage from 0.59Vdc to 5.5Vdc, programmable via an external resistor. Features include remote On/Off, adjustable output voltage, over current and over temperature protection, and output voltage sequencing (APTS versions). The Ruggedized version (-D) is capable of operation up to 105°C and withstand high levels of shock and vibration. A new feature, the Tunable Loop™, allows the user to optimize the dynamic response of the converter to match the load with reduced amount of output capacitance leading to savings on cost and PWB area.

* *UL* is a registered trademark of Underwriters Laboratories, Inc.
† *CSA* is a registered trademark of Canadian Standards Association.
‡ *VDE* is a trademark of Verband Deutscher Elektrotechniker e.V.
** ISO is a registered trademark of the International Organization of Standards

Absolute Maximum Ratings

Stresses in excess of the absolute maximum ratings can cause permanent damage to the device. These are absolute stress ratings only, functional operation of the device is not implied at these or any other conditions in excess of those given in the operations sections of the data sheet. Exposure to absolute maximum ratings for extended periods can adversely affect the device reliability.

Parameter	Device	Symbol	Min	Max	Unit
Input Voltage Continuous	All	V_{IN}	-0.3	15	Vdc
Sequencing Voltage	APTS	V_{SEQ}	-0.3	V_{iN}	Vdc
Operating Ambient Temperature (see Thermal Considerations section)	All -D version	T_A T_A	-40 -40	85 105	°C °C
Storage Temperature	All	T_{stg}	-55	125	°C

Electrical Specifications

Unless otherwise indicated, specifications apply over all operating input voltage, resistive load, and temperature conditions.

Parameter	Device	Symbol	Min	Typ	Max	Unit
Operating Input Voltage	All	V_{IN}	4.5	—	14.0	Vdc
Maximum Input Current (V_{IN}=4.5V to 14V, I_O=$I_{O,\,max}$)	All	$I_{IN,max}$			6.5	Adc
Input No Load Current (V_{IN} = 12.0Vdc, I_O = 0, module enabled)	$V_{O,set}$ = 0.6 Vdc	$I_{IN,No\ load}$		16		mA
	$V_{O,set}$ = 3.3Vdc	$I_{IN,No\ load}$		55		mA
Input Stand-by Current (V_{IN} = 12.0Vdc, module disabled)	All	$I_{IN,stand\text{-}by}$		1.2		mA
Inrush Transient	All	I^2t			1	A^2s
Input Reflected Ripple Current, peak-to-peak (5Hz to 20MHz, 1μH source impedance; V_{IN} =0 to 14V, I_O= I_{Omax} ; See Test Configurations)	All			86		mAp-p
Input Ripple Rejection (120Hz)	All			50		dB

CAUTION: This power module is not internally fused. An input line fuse must always be used.

This power module can be used in a wide variety of applications, ranging from simple standalone operation to an integrated part of sophisticated power architecture. To preserve maximum flexibility, internal fusing is not included; however, to achieve maximum safety and system protection, always use an input line fuse. The safety agencies require a fast-acting fuse with a maximum rating of 6A (see Safety Considerations section). Based on the information provided in this data sheet on inrush energy and maximum dc input current, the same type of fuse with a lower rating can be used. Refer to the fuse manufacturer's data sheet for further information.

Electrical Specifications (continued)

Parameter	Device	Symbol	Min	Typ	Max	Unit
Output Voltage Set-point (with 0.5% tolerance for external resistor used to set output voltage)	All	$V_{O, set}$	-1.5		+1.5	% $V_{O, set}$
Output Voltage (Over all operating input voltage, resistive load, and temperature conditions until end of life)	All	$V_{O, set}$	-2.5	—	+2.5	% $V_{O, set}$
Adjustment Range (selected by an external resistor) (Some output voltages may not be possible depending on the input voltage – see Feature Descriptions Section)	All	V_O	0.59		5.5	Vdc
Remote Sense Range	All				0.5	Vdc
Output Regulation (for $V_O \geq 2.5$Vdc)						
Line (V_{IN}=$V_{IN, min}$ to $V_{IN, max}$)	All			—	+0.4	% $V_{O, set}$
Load (I_O=$I_{O, min}$ to $I_{O, max}$)	All			—	10mV	% $V_{O, set}$
Temperature (T_{ref}=$T_{A, min}$ to $T_{A, max}$)	All			—	+0.4	% $V_{O, set}$
Output Regulation (for $V_O < 2.5$Vdc)						
Line (V_{IN}=$V_{IN, min}$ to $V_{IN, max}$)	All			—	10	mV
Load (I_O=$I_{O, min}$ to $I_{O, max}$)	All			—	5	mV
Temperature (T_{ref}=$T_{A, min}$ to $T_{A, max}$)	All			—	5	mV
Output Ripple and Noise on nominal output (V_{IN}=$V_{IN, nom}$ and I_O=$I_{O, min}$ to $I_{O, max}$ Co = 0.1µF // 10 µF ceramic capacitors)						
Peak-to-Peak (5Hz to 20MHz bandwidth)	All		—	50	100	mV_{pk-pk}
RMS (5Hz to 20MHz bandwidth)	All			20	38	mV_{rms}
External Capacitance[1]						
Without the Tunable Loop™						
ESR ≥ 1 mΩ	All	$C_{O, max}$	0	—	47	µF
With the Tunable Loop™						
ESR ≥0.15 mΩ	All	$C_{O, max}$	0	—	1000	µF
ESR ≥ 10 mΩ	All	$C_{O, max}$	0	—	3000	µF
Output Current (in either sink or source mode)	All	I_o	0		6	Adc
Output Current Limit Inception (Hiccup Mode) (current limit does not operate in sink mode)	All	$I_{O, lim}$			200	% $I_{o,max}$
Output Short-Circuit Current (V_O≤250mV) (Hiccup Mode)	All	$I_{O, s/c}$		170		mA
Efficiency	$V_{O,set}$ = 0.6Vdc	η		69.3		%
V_{IN}= 12Vdc, T_A=25°C	$V_{O, set}$ = 1.2Vdc	η		80.7		%
I_O=$I_{O, max}$, V_O= $V_{O,set}$	$V_{O,set}$ = 1.8Vdc	η		85.3		%
	$V_{O,set}$ = 2.5Vdc	η		88.1		%
	$V_{O,set}$ = 3.3Vdc	η		90.8		%
	$V_{O,set}$ = 5.0Vdc	η		93.6		%
Switching Frequency	All	f_{sw}	—	600	—	kHz

[1] External capacitors may require using the new Tunable Loop™ feature to ensure that the module is stable as well as getting the best transient response. See the Tunable Loop™ section for details.

General Specifications

Parameter	Device	Min	Typ	Max	Unit
Calculated MTBF (I_O=0.8$I_{O, max}$, T_A=40°C) Telecordia Issue 2 Method 1 Case 3	APTS		14,353,850		Hours
	APXS		22,280,045		Hours
Weight		—	1.95 (0.0687)	—	g (oz.)

Feature Specifications

Unless otherwise indicated, specifications apply over all operating input voltage, resistive load, and temperature conditions. See Feature Descriptions for additional information.

Parameter	Device	Symbol	Min	Typ	Max	Unit
On/Off Signal Interface						
(V_{IN}=$V_{IN, min}$ to $V_{IN, max}$; open collector or equivalent,						
Signal referenced to GND)						
Device is with suffix "4" – Positive Logic (See Ordering Information)						
Logic High (Module ON)						
Input High Current	All	I_{IH}		—	10	μA
Input High Voltage	All	V_{IH}	3.5	—	$V_{IN,max}$	V
Logic Low (Module OFF)						
Input Low Current	All	I_{IL}	—	—	1	mA
Input Low Voltage	All	V_{IL}	-0.3	—	0.8	V
Device Code with no suffix – Negative Logic (See Ordering Information)						
(On/OFF pin is open collector/drain logic input with						
external pull-up resistor; signal referenced to GND)						
Logic High (Module OFF)						
Input High Current	All	I_{IH}	—	—	1	mA
Input High Voltage	All	V_{IH}	3.5	—	$V_{IN, max}$	Vdc
Logic Low (Module ON)						
Input low Current	All	I_{IL}	—	—	10	μA
Input Low Voltage	All	V_{IL}	-0.2	—	0.6	Vdc
Turn-On Delay and Rise Times						
(V_{IN}=$V_{IN, nom}$, I_O=$I_{O, max}$, V_O to within ±1% of steady state)						
Case 1: On/Off input is enabled and then input power is applied (delay from instant at which V_{IN} = $V_{IN, min}$ until V_o = 10% of $V_{o, set}$)	All	Tdelay	—	2	—	msec
Case 2: Input power is applied for at least one second and then the On/Off input is enabled (delay from instant at which Von/Off is enabled until V_o = 10% of $V_{o, set}$)	All	Tdelay	—	2	—	msec
Output voltage Rise time (time for V_o to rise from 10% of Vo, set to 90% of Vo, set)	All	Trise	—	4	—	msec
Output voltage overshoot (T_A = 25°C					3.0	% $V_{O, set}$
V_{IN}= $V_{IN, min}$ to $V_{IN, max}$,I_O = $I_{O, min}$ to $I_{O, max}$)						
With or without maximum external capacitance						
Over Temperature Protection	All	T_{ref}		140		°C
(See Thermal Considerations section)						
Tracking Accuracy (Power-Up: 2V/ms)	APTS	V_{SEQ} –V_o			100	mV
(Power-Down: 2V/ms)	APTS	V_{SEQ} –V_o			100	mV
($V_{IN, min}$ to $V_{IN, max}$; $I_{O, min}$ to $I_{O, max}$ V_{SEQ} < V_o)						

Feature Specifications (cont.)

Parameter	Device	Symbol	Min	Typ	Max	Units
Input Undervoltage Lockout						
Turn-on Threshold	All				4.3	Vdc
Turn-off Threshold	All		3.4			Vdc
Hysteresis	All		0.4			Vdc
PGOOD (Power Good)						
Signal Interface Open Drain, $V_{supply} \leq 5VDC$						
Output Voltage Limit for PGOOD	All		90%		110%	$V_{O, set}$
Pulldown resistance of PGOOD pin	All			7	50	Ω

Characteristic Curves

The following figures provide typical characteristics for the 12V Pico TLynx™ 6A at 0.6Vo and at 25°C.

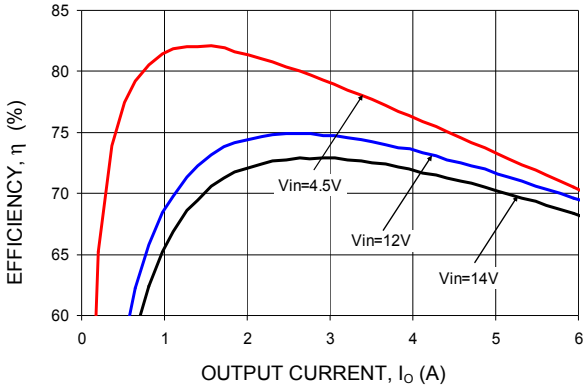

Figure 1. Converter Efficiency versus Output Current.

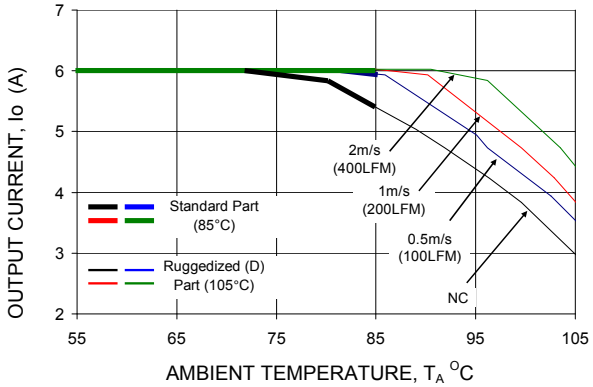

Figure 2. Derating Output Current versus Ambient Temperature and Airflow.

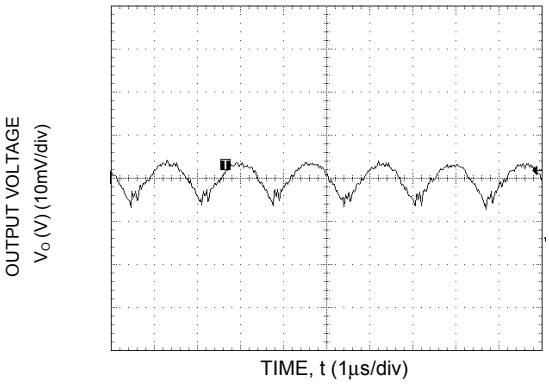

Figure 3. Typical output ripple and noise (V_{IN} = 12V, I_o = $I_{o,max}$).

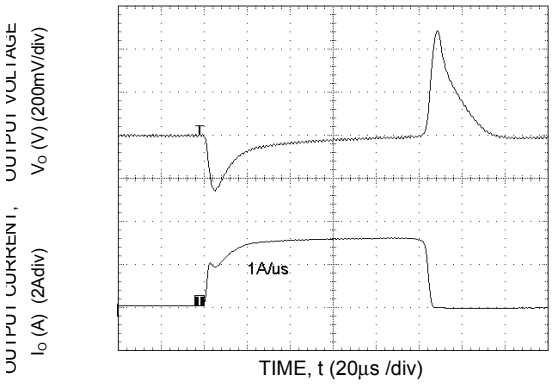

Figure 4. Transient Response to Dynamic Load Change from 0% to 50% to 0% .

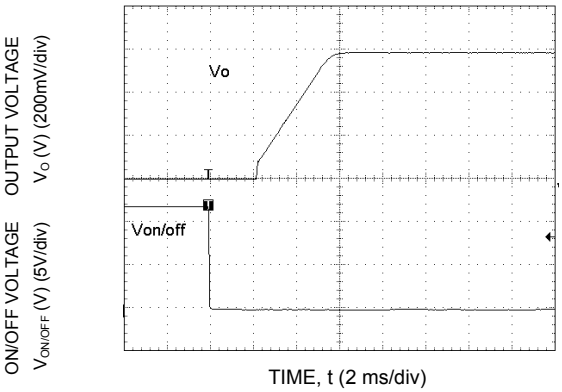

Figure 5. Typical Start-up Using On/Off Voltage (I_o = $I_{o,max}$).

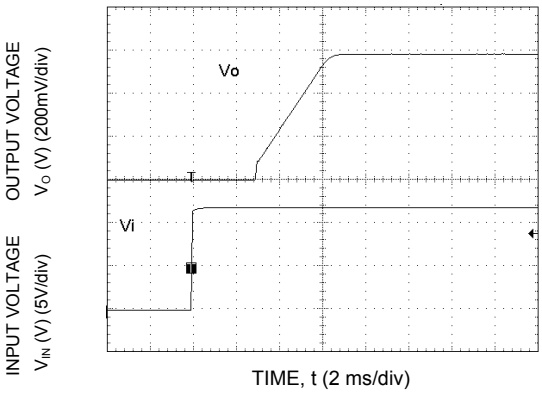

Figure 6. Typical Start-up Using Input Voltage (V_{IN} = 12V, I_o = $I_{o,max}$).

Characteristic Curves

The following figures provide typical characteristics for the 12V Pico TLynx™ 6A at 1.2Vo and at 25°C.

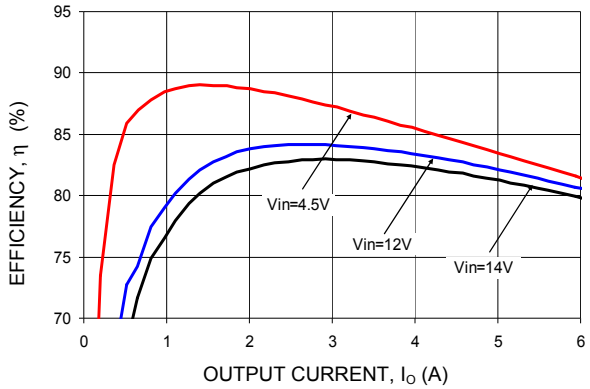

Figure 7. Converter Efficiency versus Output Current.

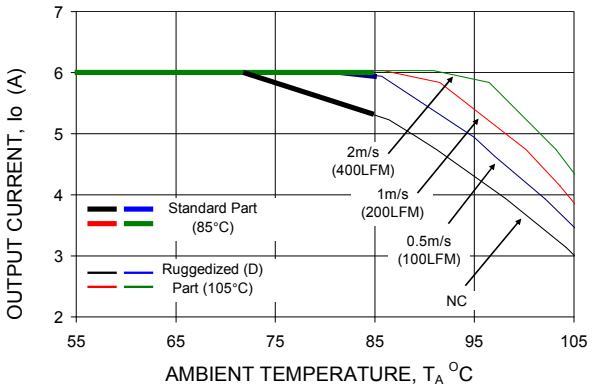

Figure 8. Derating Output Current versus Ambient Temperature and Airflow.

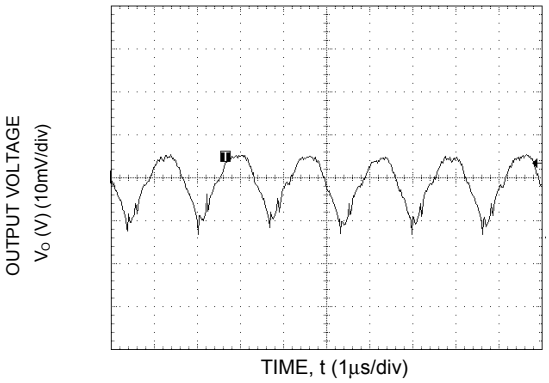

Figure 9. Typical output ripple and noise (V_{IN} = 12V, I_o = $I_{o,max}$).

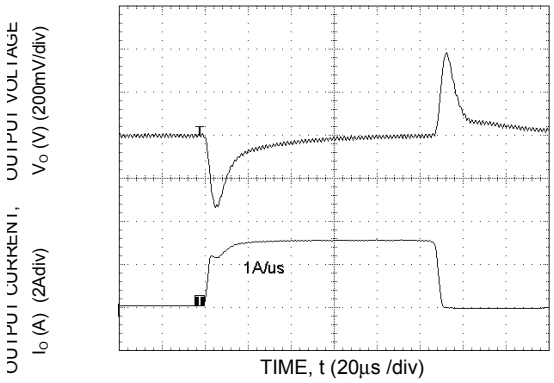

Figure 10. Transient Response to Dynamic Load Change from 0% to 50% to 0%.

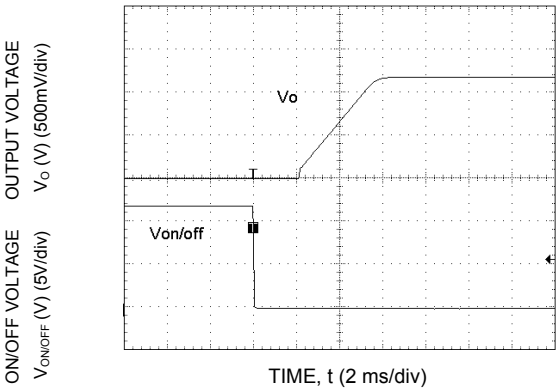

Figure 11. Typical Start-up Using On/Off Voltage (I_o = $I_{o,max}$).

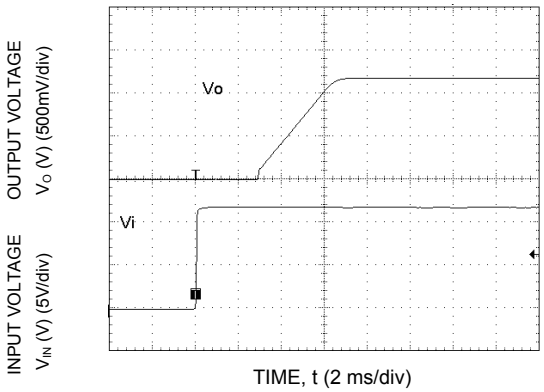

Figure 12. Typical Start-up Using Input Voltage (V_{IN} = 12V, I_o = $I_{o,max}$).

Characteristic Curves

The following figures provide typical characteristics for the 12V Pico TLynx™ 6A at 1.8Vo and at 25°C.

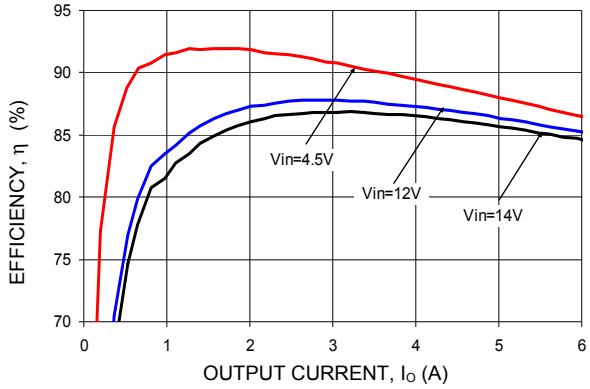

Figure 13. Converter Efficiency versus Output Current.

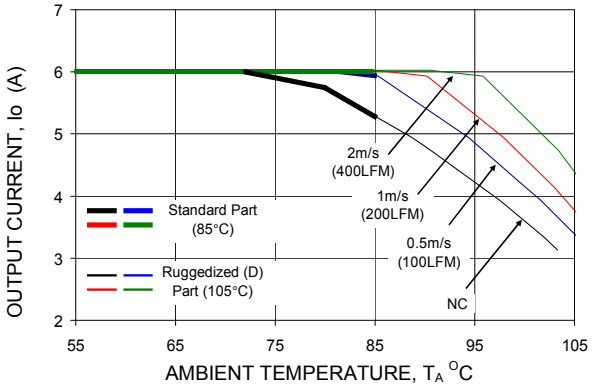

Figure 14. Derating Output Current versus Ambient Temperature and Airflow.

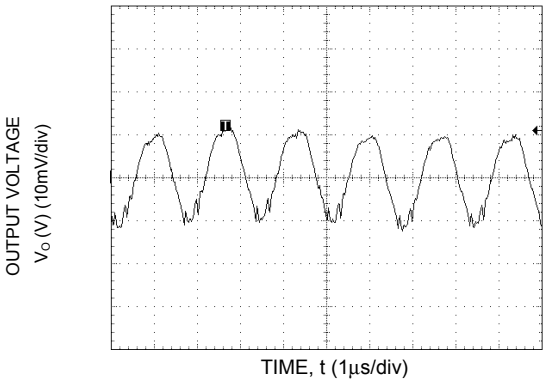

Figure 15. Typical output ripple and noise (V_{IN} = 12V, I_o = $I_{o,max}$).

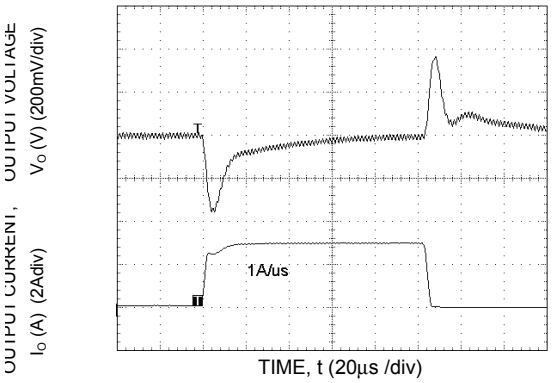

Figure 16. Transient Response to Dynamic Load Change from 0% to 50% to 0%.

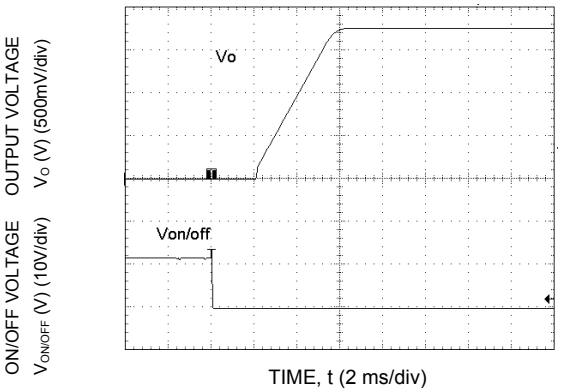

Figure 17. Typical Start-up Using On/Off Voltage (I_o = $I_{o,max}$).

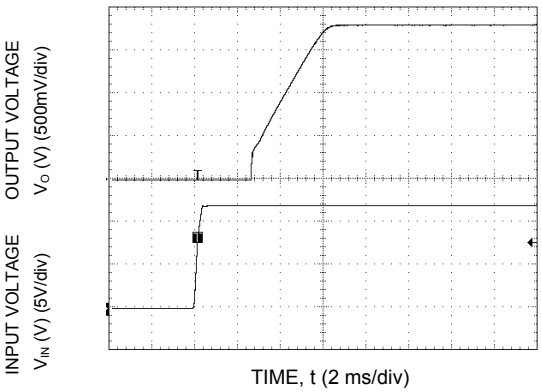

Figure 18. Typical Start-up Using Input Voltage (V_{IN} = 12V, I_o = $I_{o,max}$).

Characteristic Curves

The following figures provide typical characteristics for the 12V Pico TLynx™ 6A at 2.5Vo and at 25°C.

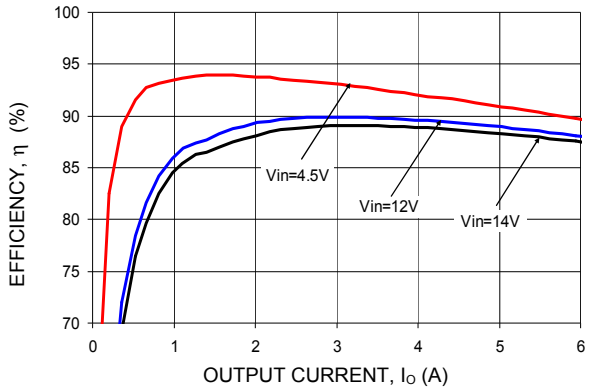

Figure 19. Converter Efficiency versus Output Current.

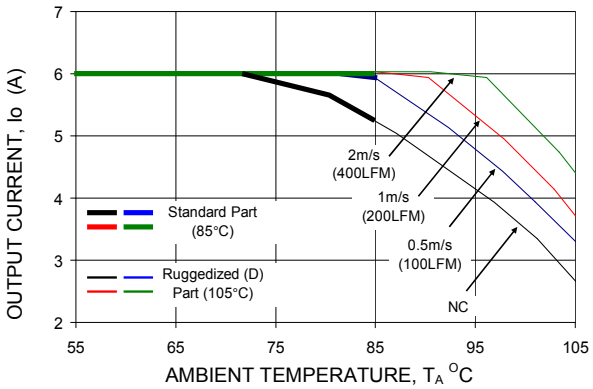

Figure 20. Derating Output Current versus Ambient Temperature and Airflow.

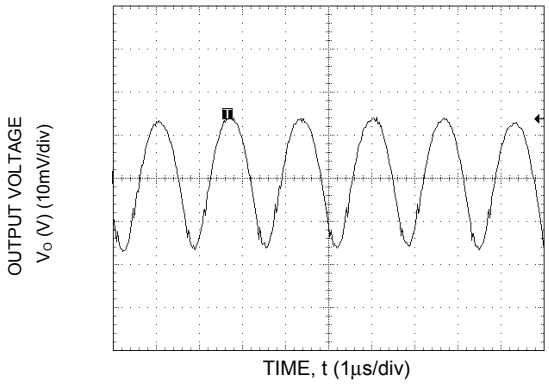

Figure 21. Typical output ripple and noise (V_{IN} = 12V, I_o = $I_{o,max}$).

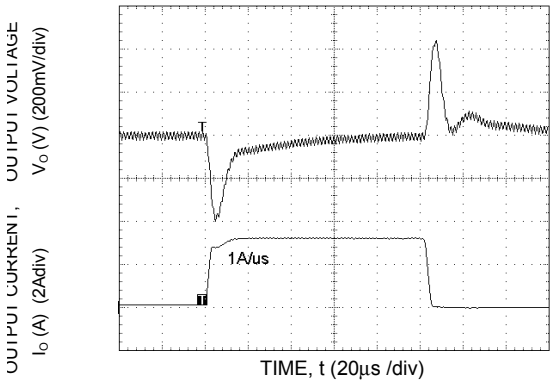

Figure 22. Transient Response to Dynamic Load Change from 0% to 50% to 0%.

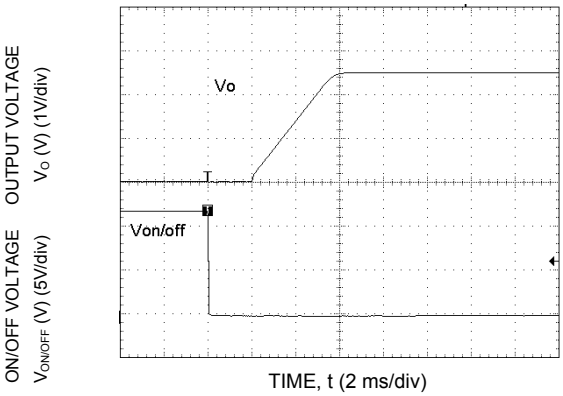

Figure 23. Typical Start-up Using On/Off Voltage (I_o = $I_{o,max}$).

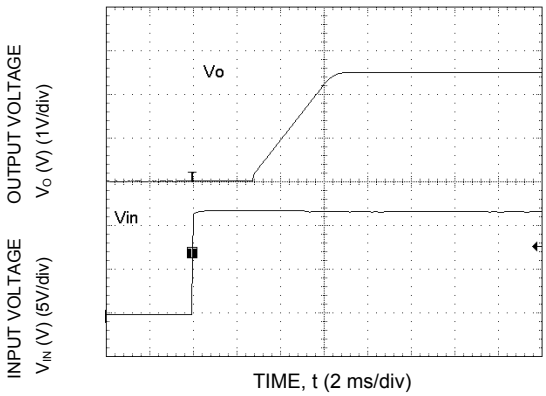

Figure 24. Typical Start-up Using Input Voltage (V_{IN} = 12V, I_o = $I_{o,max}$).

Characteristic Curves

The following figures provide typical characteristics for the 12V Pico TLynx™ 6A at 3.3Vo and at 25°C.

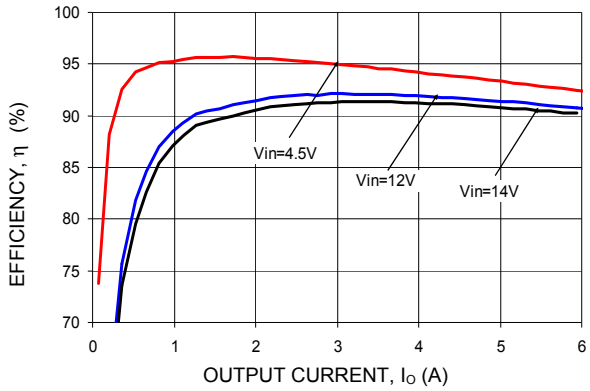

Figure 25. Converter Efficiency versus Output Current.

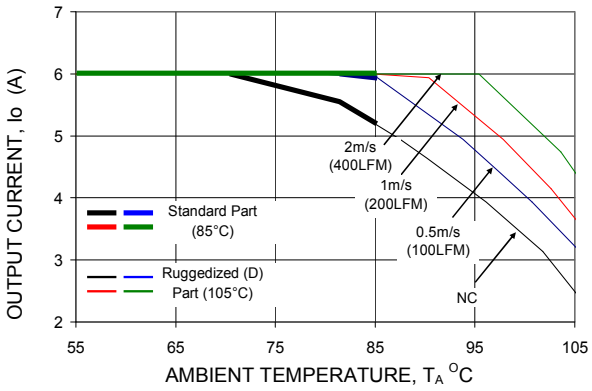

Figure 26. Derating Output Current versus Ambient Temperature and Airflow.

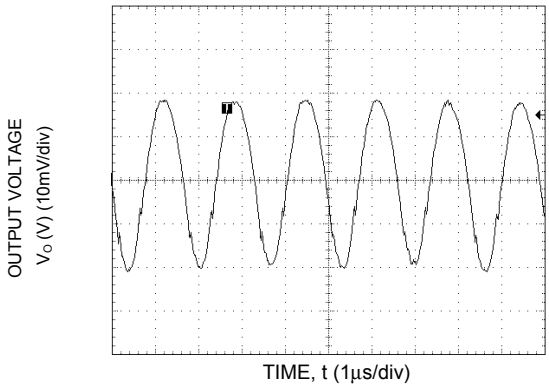

Figure 27. Typical output ripple and noise (V_{IN} = 12V, I_o = $I_{o,max}$).

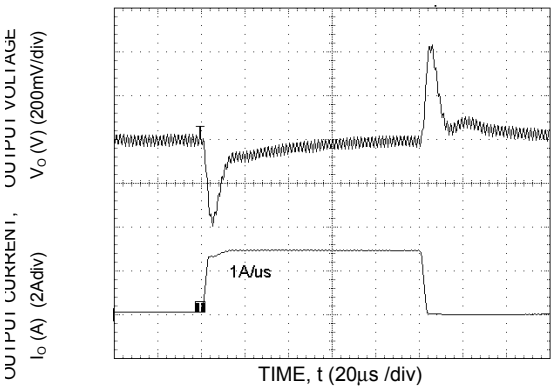

Figure 28. Transient Response to Dynamic Load Change from 0% 50% to 0%.

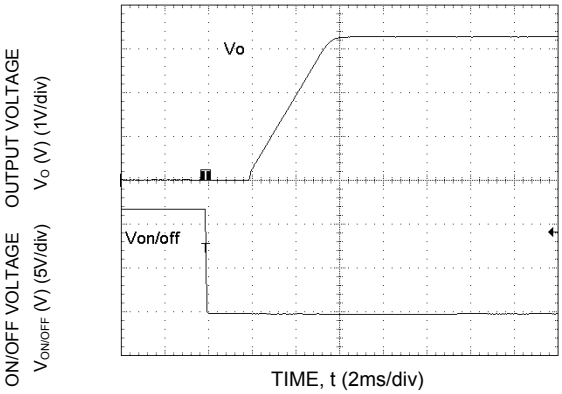

Figure 29. Typical Start-up Using On/Off Voltage (I_o = $I_{o,max}$).

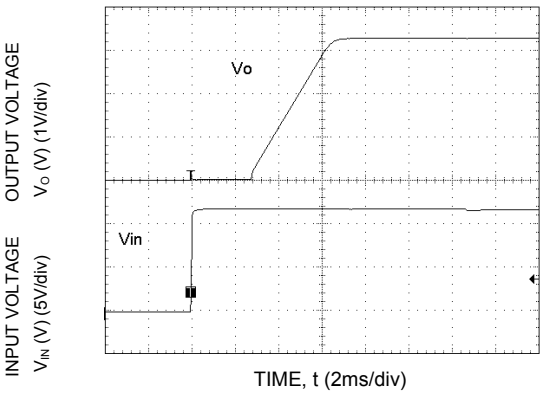

Figure 30. Typical Start-up Using Input Voltage (V_{IN} = 12V, I_o = $I_{o,max}$).

Characteristic Curves

The following figures provide typical characteristics for the 12V Pico TLynx™ 6A at 5Vo and at 25°C.

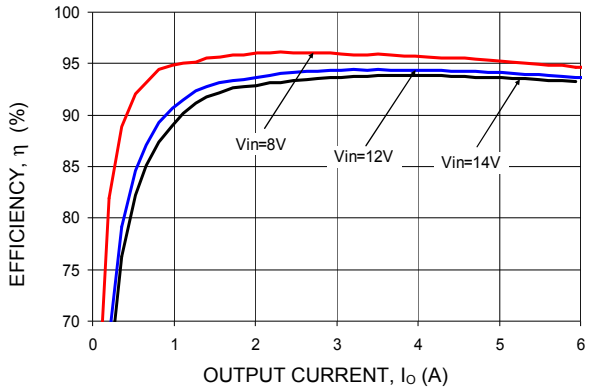

Figure 31. Converter Efficiency versus Output Current.

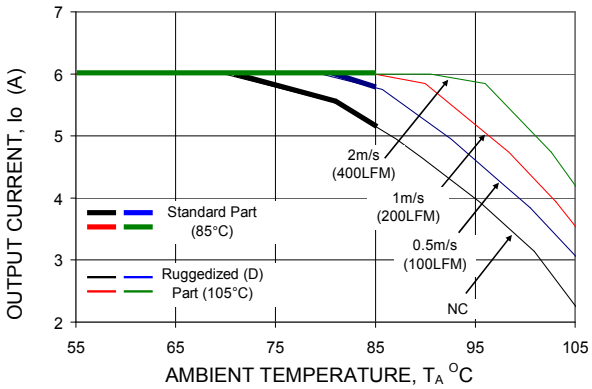

Figure 34. Derating Output Current versus Ambient Temperature and Airflow.

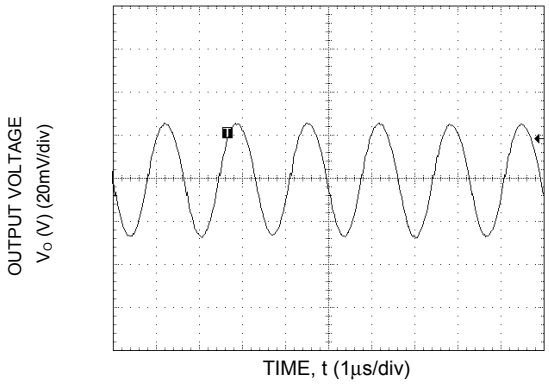

Figure 32. Typical output ripple and noise (V_{IN} = 12V, I_o = $I_{o,max}$).

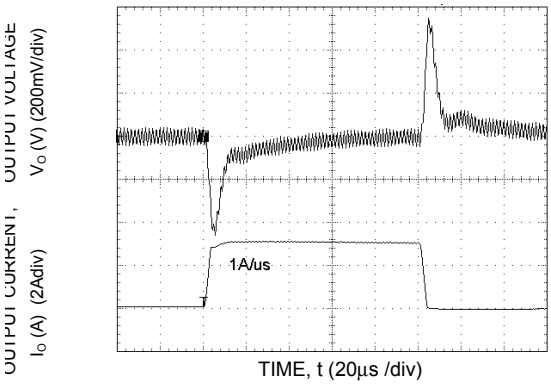

Figure 35. Transient Response to Dynamic Load Change from 0% 50% to 0%.

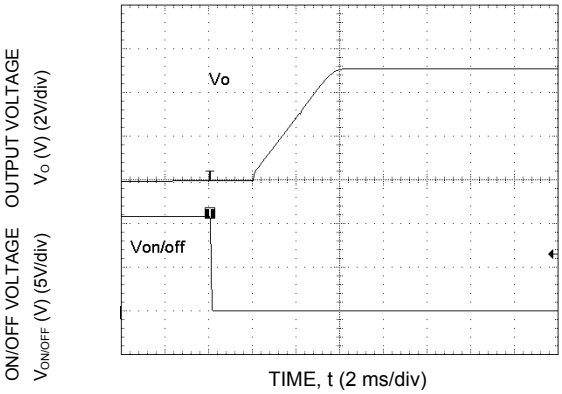

Figure 33. Typical Start-up Using On/Off Voltage (I_o = $I_{o,max}$).

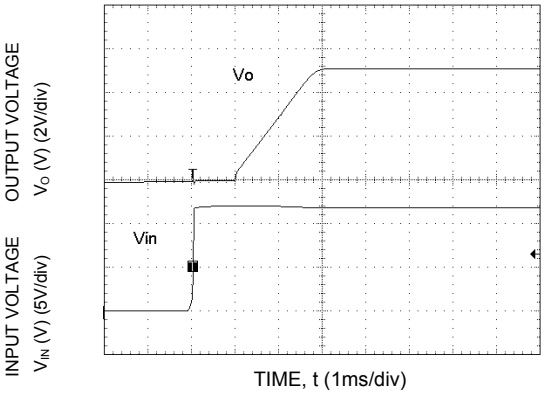

Figure 36. Typical Start-up Using Input Voltage (V_{IN} = 12V, I_o = $I_{o,max}$).

Test Configurations

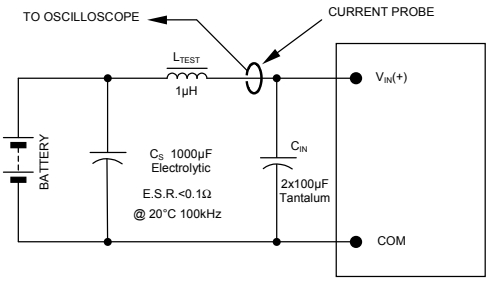

NOTE: Measure input reflected ripple current with a simulated source inductance (L_{TEST}) of 1μH. Capacitor C_S offsets possible battery impedance. Measure current as shown above.

Figure 37. Input Reflected Ripple Current Test Setup.

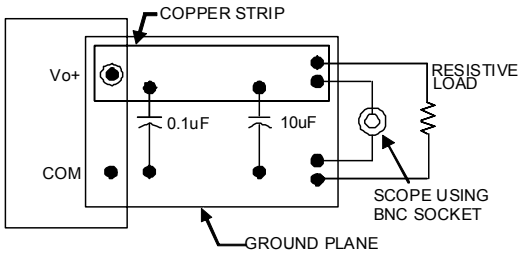

NOTE: All voltage measurements to be taken at the module terminals, as shown above. If sockets are used then Kelvin connections are required at the module terminals to avoid measurement errors due to socket contact resistance.

Figure 38. Output Ripple and Noise Test Setup.

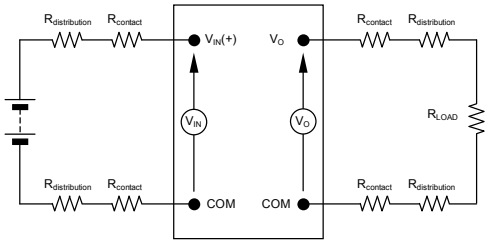

NOTE: All voltage measurements to be taken at the module terminals, as shown above. If sockets are used then Kelvin connections are required at the module terminals to avoid measurement errors due to socket contact resistance.

Figure 39. Output Voltage and Efficiency Test Setup.

$$\text{Efficiency} \quad \eta = \frac{V_O . I_O}{V_{IN} . I_{IN}} \times 100 \ \%$$

Design Considerations

Input Filtering

The 12V Pico TLynx™ 6A module should be connected to a low ac-impedance source. A highly inductive source can affect the stability of the module. An input capacitance must be placed directly adjacent to the input pin of the module, to minimize input ripple voltage and ensure module stability.

To minimize input voltage ripple, ceramic capacitors are recommended at the input of the module. Figure 40 shows the input ripple voltage for various output voltages at 6A of load current with 1x10 μF or 1x22 μF ceramic capacitors and an input of 12V.

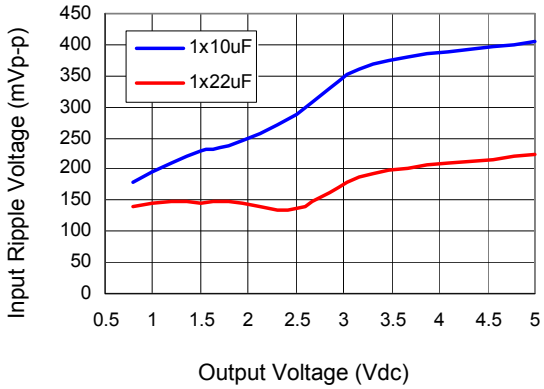

Figure 40. Input ripple voltage for various output voltages with 1x10 μF or 1x22 μF ceramic capacitors at the input (6A load). Input voltage is 12V.

Output Filtering

The 12V Pico TLynx™ 6A modules are designed for low output ripple voltage and will meet the maximum output ripple specification with 0.1 μF ceramic and 10 μF ceramic capacitors at the output of the module. However, additional output filtering may be required by the system designer for a number of reasons. First, there may be a need to further reduce the output ripple and noise of the module. Second, the dynamic response characteristics may need to be customized to a particular load step change.

To reduce the output ripple and improve the dynamic response to a step load change, additional capacitance at the output can be used. Low ESR polymer and ceramic capacitors are recommended to improve the dynamic response of the module. Figure 41 provides output ripple information for different external capacitance values at various Vo and for a load current of 6A. For stable operation of the module, limit the capacitance to less than the

maximum output capacitance as specified in the electrical specification table. Optimal performance of the module can be achieved by using the Tunable Loop™ feature described later in this data sheet.

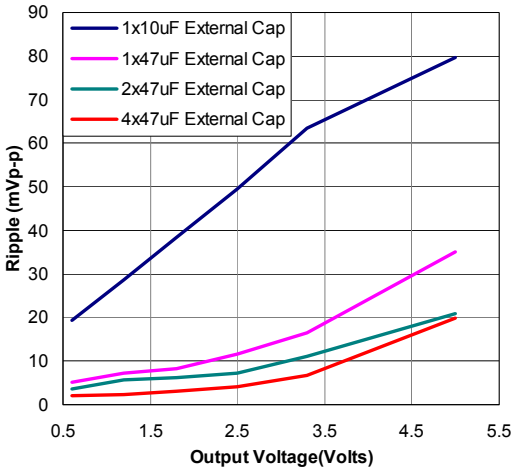

Figure 41. Output ripple voltage for various output voltages with external 1x10 µF, 1x47 µF, 2x47 µF or 4x47 µF ceramic capacitors at the output (6A load). Input voltage is 12V.

Safety Considerations

For safety agency approval the power module must be installed in compliance with the spacing and separation requirements of the end-use safety agency standards, i.e., UL 60950-1, CSA C22.2 No. 60950-1-03, and VDE 0850:2001-12 (EN60950-1) Licensed.

For the converter output to be considered meeting the requirements of safety extra-low voltage (SELV), the input must meet SELV requirements. The power module has extra-low voltage (ELV) outputs when all inputs are ELV.

The input to these units is to be provided with a fast-acting fuse with a maximum rating of 6A in the positive input lead.

Feature Descriptions

Remote Enable

The 12V Pico TLynx™ 6A power modules feature an On/Off pin for remote On/Off operation. Two On/Off logic options are available. In the Positive Logic On/Off option, (device code suffix "4" – see Ordering Information), the module turns ON during a logic High on the On/Off pin and turns OFF during a logic Low. With the Negative Logic On/Off option, (no device code suffix, see Ordering Information), the module turns OFF during logic High and ON during logic Low. The On/Off signal is always referenced to ground. For either On/Off logic option, leaving the On/Off pin disconnected will turn the module ON when input voltage is present.

For positive logic modules, the circuit configuration for using the On/Off pin is shown in Figure 42. When the external transistor Q1 is in the OFF state, the internal PWM Enable signal is pulled high through an internal 1.5MΩ resistor and the external pullup resistor and the module is ON. When transistor Q1 is turned ON, the On/Off pin is pulled low and the module is OFF. A suggested value for R_{pullup} is 20kΩ.

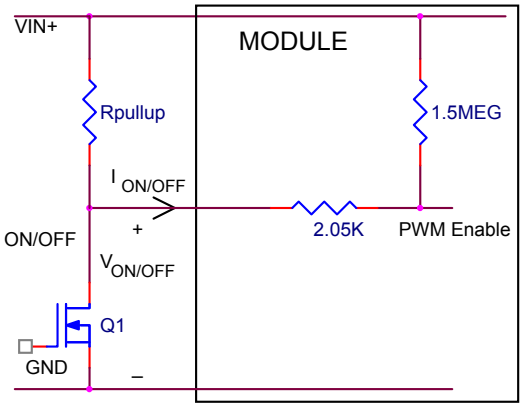

Figure 42. Circuit configuration for using positive On/Off logic.

For negative logic On/Off modules, the circuit configuration is shown in Fig. 43. The On/Off pin should be pulled high with an external pull-up resistor (suggested value for the 4.5V to 14V input range is 20Kohms). When transistor Q2 is in the OFF state, the On/Off pin is pulled high, transistor Q1 is turned ON and the module is OFF. To turn the module ON, Q2 is turned ON pulling the On/Off pin low, turning transistor Q1 OFF resulting in the PWM Enable pin going high.

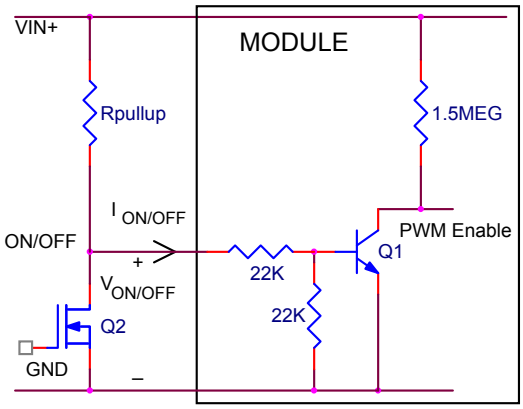

Figure 43. Circuit configuration for using negative On/Off logic.

Overcurrent Protection

To provide protection in a fault (output overload) condition, the unit is equipped with internal current-limiting circuitry and can endure current limiting continuously. At the point of current-limit inception, the unit enters hiccup mode. The unit operates normally once the output current is brought back into its specified range.

Overtemperature Protection

To provide protection in a fault condition, the unit is equipped with a thermal shutdown circuit. The unit will shutdown if the overtemperature threshold of 140°C is exceeded at the thermal reference point T_{ref} . The thermal shutdown is not intended as a guarantee that the unit will survive temperatures beyond its rating. Once the unit goes into thermal shutdown it will then wait to cool before attempting to restart.

Input Undervoltage Lockout

At input voltages below the input undervoltage lockout limit, the module operation is disabled. The module will begin to operate at an input voltage above the undervoltage lockout turn-on threshold.

Output Voltage Programming

The output voltage of the 12V Pico TLynx™ 6A modules can be programmed to any voltage from 0.59dc to 5.5Vdc by connecting a resistor between the Trim and GND pins of the module. Certain restrictions apply on the output voltage set point depending on the input voltage. These are shown in the Output Voltage vs. Input Voltage Set Point Area plot in Fig. 44. The Upper Limit curve shows that for output voltages of 0.9V and lower, the input voltage must be lower than the maximum of 14V. The Lower Limit curve shows that for output voltages of 3.8V and higher, the input voltage needs to be larger than the minimum of 4.5V.

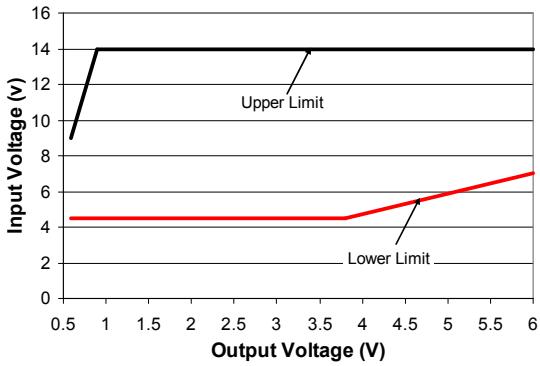

Figure 44. Output Voltage vs. Input Voltage Set Point Area plot showing limits where the output voltage can be set for different input voltages.

Without an external resistor between Trim and GND pins, the output of the module will be 0.59Vdc. To calculate the value of the trim resistor, *Rtrim* for a desired output voltage, use the following equation:

$$Rtrim = \left[\frac{5.91}{(Vo - 0.591)}\right] k\Omega$$

Rtrim is the external resistor in kΩ

Vo is the desired output voltage.

Table 1 provides Rtrim values required for some common output voltages.

Table 1

$V_{O,\ set}$ (V)	*Rtrim* (KΩ)
0.6	656.7
1.0	14.45
1.2	9.704
1.5	6.502
1.8	4.888
2.5	3.096
3.3	2.182
5.0	1.340

By using a ±0.5% tolerance trim resistor with a TC of ±100ppm, a set point tolerance of ±1.5% can be achieved as specified in the electrical specification.

Remote Sense

The 12V Pico TLynx™ 6A power modules have a Remote Sense feature to minimize the effects of distribution losses by regulating the voltage at the SENSE pin. The voltage between the SENSE pin and VOUT pin must not exceed 0.5V. Note that the output voltage of the module cannot exceed the specified maximum value. This includes the voltage drop between the SENSE and Vout pins. When the

Remote Sense feature is not being used, connect the SENSE pin to the VOUT pin.

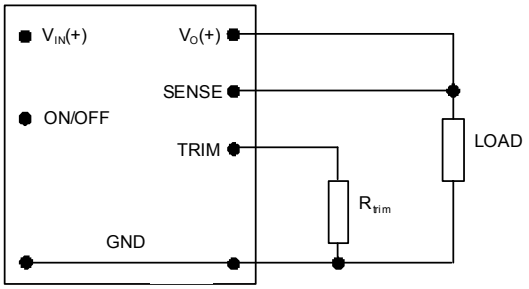

Figure 45. Circuit configuration for programming output voltage using an external resistor.

Voltage Margining

Output voltage margining can be implemented in the 12V Pico TLynx™ 6A modules by connecting a resistor, $R_{margin\text{-}up}$, from the Trim pin to the ground pin for margining-up the output voltage and by connecting a resistor, $R_{margin\text{-}down}$, from the Trim pin to output pin for margining-down. Figure 46 shows the circuit configuration for output voltage margining. The POL Programming Tool, available at www.lineagepower.com under the Design Tools section, also calculates the values of $R_{margin\text{-}up}$ and $R_{margin\text{-}down}$ for a specific output voltage and % margin. Please consult your local Lineage Power technical representative for additional details.

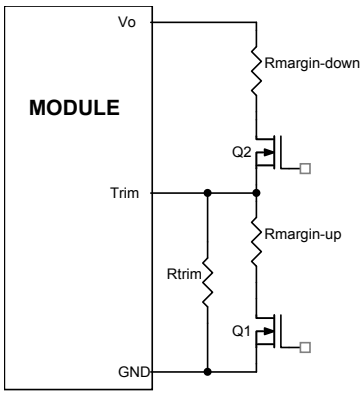

Figure 46. Circuit Configuration for margining Output voltage.

Monotonic Start-up and Shutdown

The 12V Pico TLynx™ 6A modules have monotonic start-up and shutdown behavior for any combination of rated input voltage, output current and operating temperature range.

Startup into Pre-biased Output

The 12V Pico TLynx™ 6A modules can start into a prebiased output as long as the prebias voltage is 0.5V less than the set output voltage. Note that prebias operation is not supported when output voltage sequencing is used.

Output Voltage Sequencing

The 12V Pico TLynx™ 6A modules include a sequencing feature, EZ-SEQUENCE that enables users to implement various types of output voltage sequencing in their applications. This is accomplished via an additional sequencing pin. When not using the sequencing feature, either tie the SEQ pin to V_{IN} or leave it unconnected.

When an analog voltage is applied to the SEQ pin, the output voltage tracks this voltage until the output reaches the set-point voltage. The final value of the SEQ voltage must be set higher than the set-point voltage of the module. The output voltage follows the voltage on the SEQ pin on a one-to-one basis. By connecting multiple modules together, multiple modules can track their output voltages to the voltage applied on the SEQ pin.

For proper voltage sequencing, first, input voltage is applied to the module. The On/Off pin of the module is left unconnected (or tied to GND for negative logic modules or tied to V_{IN} for positive logic modules) so that the module is ON by default. After applying input voltage to the module, a minimum 10msec delay is required before applying voltage on the SEQ pin. This delay gives the module enough time to complete its internal power-up soft-start cycle. During the delay time, the SEQ pin should be held close to ground (nominally 50mV ± 20 mV). This is required to keep the internal op-amp out of saturation thus preventing output overshoot during the start of the sequencing ramp. By selecting resistor R1 (see fig. 47) according to the following equation

$$R1 = \frac{24950}{V_{IN} - 0.05} \text{ ohms,}$$

the voltage at the sequencing pin will be 50mV when the sequencing signal is at zero.

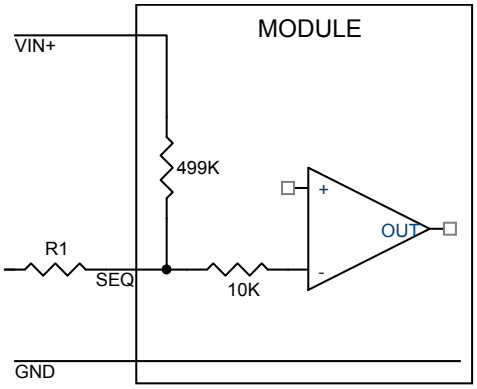

Figure 47. Circuit showing connection of the sequencing signal to the SEQ pin.

After the 10msec delay, an analog voltage is applied to the SEQ pin and the output voltage of the module will track this voltage on a one-to-one volt bases until the output reaches the set-point voltage. To initiate simultaneous shutdown of the modules, the SEQ pin voltage is lowered in a controlled manner. The output voltage of the modules tracks the voltages below their set-point voltages on a one-to-one basis. A valid input voltage must be maintained until the tracking and output voltages reach ground potential.

When using the EZ-SEQUENCE™ feature to control start-up of the module, pre-bias immunity during start-up is disabled. The pre-bias immunity feature of the module relies on the module being in the diode-mode during start-up. When using the EZ-SEQUENCE™ feature, modules goes through an internal set-up time of 10msec, and will be in synchronous rectification mode when the voltage at the SEQ pin is applied. This will result in the module sinking current if a pre-bias voltage is present at the output of the module. When pre-bias immunity during start-up is required, the EZ-SEQUENCE™ feature must be disabled. For additional guidelines on using the EZ-SEQUENCE™ feature please refer to Application Note AN04-008 "Application Guidelines for Non-Isolated Converters: Guidelines for Sequencing of Multiple Modules", or contact the Lineage Power technical representative for additional information.

Power Good

The 12V Pico TLynx™ 6A modules provide a Power Good (PGOOD) signal that is implemented with an open-drain output to indicate that the output voltage is within the regulation limits of the power module. The PGOOD signal will be de-asserted to a low state if any condition such as overtemperature, overcurrent or loss of regulation occurs that would result in the output voltage going ±10% outside the setpoint value. The PGOOD terminal should be connected through a pullup resistor (suggested value 100KΩ) to a source of 5VDC or lower.

Tunable Loop™

The 12V Pico TLynx™ 6A modules have a new feature that optimizes transient response of the module called Tunable Loop™.

External capacitors are usually added to the output of the module for two reasons: to reduce output ripple and noise (see Fig. 41) and to reduce output voltage deviations from the steady-state value in the presence of dynamic load current changes. Adding external capacitance however affects the voltage control loop of the module, typically causing the loop to slow down with sluggish response. Larger values of external capacitance could also cause the module to become unstable.

The Tunable Loop™ allows the user to externally adjust the voltage control loop to match the filter network connected to the output of the module. The Tunable Loop™ is implemented by connecting a series R-C between the SENSE and TRIM pins of the module, as shown in Fig. 48. This R-C allows the user to externally adjust the voltage loop feedback compensation of the module.

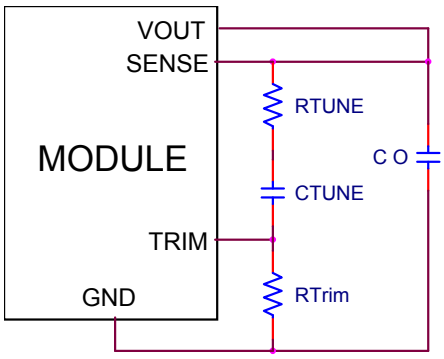

Figure. 48. Circuit diagram showing connection of R_{TUME} and C_{TUNE} to tune the control loop of the module.

Recommended values of R_{TUNE} and C_{TUNE} for different output capacitor combinations are given in Tables 2 and 3. Table 2 shows the recommended values of R_{TUNE} and C_{TUNE} for different values of ceramic output capacitors up to 470uF that might be needed for an application to meet output ripple and noise requirements. Selecting R_{TUNE} and C_{TUNE} according to Table 2 will ensure stable operation of the module.

In applications with tight output voltage limits in the presence of dynamic current loading, additional output capacitance will be required. Table 3 lists recommended values of R_{TUNE} and C_{TUNE} in order to meet 2% output voltage deviation limits for some common output voltages in the presence of a 3A to 6A step change (50% of full load), with an input voltage of 12V.

Please contact your Lineage Power technical representative to obtain more details of this feature as well as for guidelines on how to select the right value of external R-C to tune the module for best transient performance and stable operation for other output capacitance values or input voltages other than 12V.

Table 2. General recommended values of of R_{TUNE} and C_{TUNE} for Vin=12V and various external ceramic capacitor combinations.

Co	1x47µF	2x47µF	4x47µF	6x47µF	10x47µF
R_{TUNE}	270	220	150	75	75
C_{TUNE}	2200pF	4700pF	8200pF	12nF	18nF

Table 3. Recommended values of R_{TUNE} and C_{TUNE} to obtain transient deviation of ≤2% of Vout for a 3A step load with Vin=12V.

Vo	5V	3.3V	2.5V	1.8V	1.2V	0.6V
Co	2x47µF	3x47µF	4x47µF	6x47µF	2x47µF + 330µF Polymer	3 x330µF Polymer
R_{TUNE}	220	180	150	120	100	100
C_{TUNE}	3900pF	6800pF	10nF	12nF	15nF	120nF
ΔV	87mV	57mV	43mV	32mV	23mV	12mV

Thermal Considerations

Power modules operate in a variety of thermal environments; however, sufficient cooling should always be provided to help ensure reliable operation.

Considerations include ambient temperature, airflow, module power dissipation, and the need for increased reliability. A reduction in the operating temperature of the module will result in an increase in reliability. The thermal data presented here is based on physical measurements taken in a wind tunnel. The test set-up is shown in Figure 49. The preferred airflow direction for the module is in Figure 50.

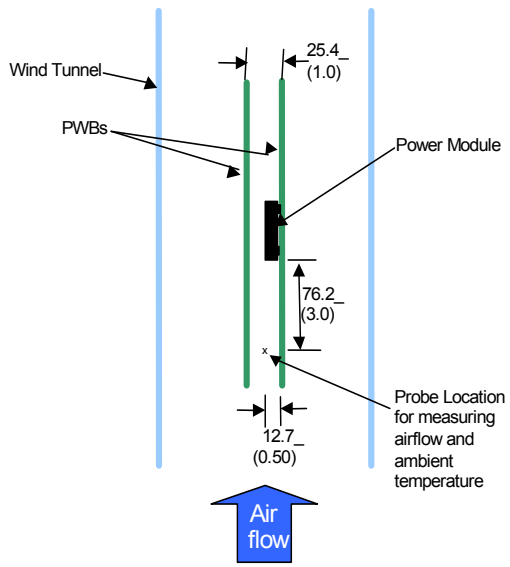

Figure 49. Thermal Test Setup.

The thermal reference points, T_{ref} used in the specifications are also shown in Figure 50. For reliable operation the temperatures at these points should not exceed 120°C. The output power of the module should not exceed the rated power of the module (Vo,set x Io,max).

Please refer to the Application Note "Thermal Characterization Process For Open-Frame Board-Mounted Power Modules" for a detailed discussion of thermal aspects including maximum device temperatures.

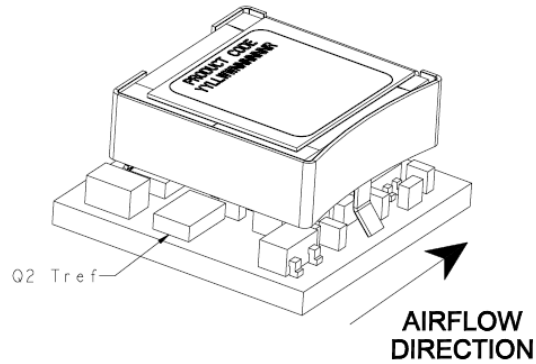

Figure 50. Preferred airflow direction and location of hot-spot of the module (Tref).

Modules marked ruggedized with a "D" suffix operate up to an ambient of 105°C. For the remaining types de-rating curves for individual output voltages meet existing specifications up to 85°C.

Shock and Vibration

The ruggedized (-D version) of the modules are designed to withstand elevated levels of shock and vibration to be able to operate in harsh environments. The ruggedized modules have been successfully tested to the following conditions:

Non operating random vibration:
Random vibration tests conducted at 25C, 10 to 2000Hz, for 30 minutes each level, starting from 30Grms (Z axis) and up to 50Grms (Z axis). The units were then subjected to two more tests of 50Grms at 30 minutes each for a total of 90 minutes.

Operating shock to 40G per Mil Std. 810F, Method 516.4 Procedure I:
The modules were tested in opposing directions along each of three orthogonal axes, with waveform and amplitude of the shock impulse characteristics as follows:

All shocks were half sine pulses, 11 milliseconds (ms) in duration in all 3 axes.

Units were tested to the Functional Shock Test of MIL-STD-810, Method 516.4, Procedure I - Figure 516.4-4. A shock magnitude of 40G was utilized. The operational units were subjected to three shocks in each direction along three axes for a total of eighteen shocks.

Operating vibration per Mil Std 810F, Method 514.5 Procedure I:

The ruggedized (-D version) modules are designed and tested to vibration levels as outlined in MIL-STD-810F, Method 514.5, and Procedure 1, using the Power Spectral Density (PSD) profiles as shown in Table 1 and Table 2 for all axes. Full compliance with performance specifications was required during the performance test. No damage was allowed to the module and full compliance to performance specifications was required when the endurance environment was removed. The module was tested per MIL-STD-810, Method 514.5, Procedure I, for functional (performance) and endurance random vibration using the performance and endurance levels shown in Table 4 and Table 5 for all axes. The performance test has been split, with one half accomplished before the endurance test and one half after the endurance test (in each axis). The duration of the performance test was at least 16 minutes total per axis and at least 120 minutes total per axis for the endurance test. The endurance test period was 2 hours minimum per axis.

Table 4: Performance Vibration Qualification - All Axes

Frequency (Hz)	PSD Level (G2/Hz)	Frequency (Hz)	PSD Level (G2/Hz)	Frequency (Hz)	PSD Level (G2/Hz)
10	1.14E-03	170	2.54E-03	690	1.03E-03
30	5.96E-03	230	3.70E-03	800	7.29E-03
40	9.53E-04	290	7.99E-04	890	1.00E-03
50	2.08E-03	340	1.12E-02	1070	2.67E-03
90	2.08E-03	370	1.12E-02	1240	1.08E-03
110	7.05E-04	430	8.84E-04	1550	2.54E-03
130	5.00E-03	490	1.54E-03	1780	2.88E-03
140	8.20E-04	560	5.62E-04	2000	5.62E-04

Table 5: Endurance Vibration Qualification - All Axes

Frequency (Hz)	PSD Level (G2/Hz)	Frequency (Hz)	PSD Level (G2/Hz)	Frequency (Hz)	PSD Level (G2/Hz)
10	0.00803	170	0.01795	690	0.00727
30	0.04216	230	0.02616	800	0.05155
40	0.00674	290	0.00565	890	0.00709
50	0.01468	340	0.07901	1070	0.01887
90	0.01468	370	0.07901	1240	0.00764
110	0.00498	430	0.00625	1550	0.01795
130	0.03536	490	0.01086	1780	0.02035
140	0.0058	560	0.00398	2000	0.00398

Example Application Circuit

Requirements:

Vin:	**12V**
Vout:	**1.8V**
Iout:	**4.5A max., worst case load transient is from 3A to 4.5A**
ΔVout:	**1.5% of Vout (27mV) for worst case load transient**
Vin, ripple	**1.5% of Vin (50mV, p-p)**

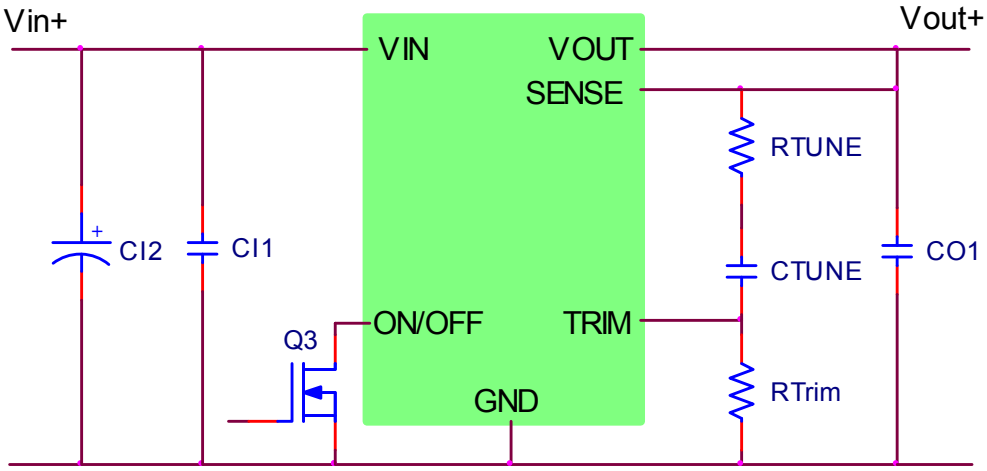

CI1	22µF/16V ceramic capacitor (e.g. Murata GRM32ER61C226KE20)
CI2	47µF/16V bulk electrolytic
CO1	5 x 47µF/6.3V ceramic capacitor (e.g. Murata GRM31CR60J476ME19)
CTune	12nF ceramic capacitor (can be 1206, 0805 or 0603 size)
RTune	120 ohms SMT resistor (can be 1206, 0805 or 0603 size)
RTrim	4.87kΩ SMT resistor (can be 1206, 0805 or 0603 size, recommended tolerance of 0.1%)

Mechanical Outline

Dimensions are in millimeters and (inches).

Tolerances: x.x mm ± 0.5 mm (x.xx in. ± 0.02 in.) [unless otherwise indicated]

x.xx mm ± 0.25 mm (x.xxx in ± 0.010 in.)

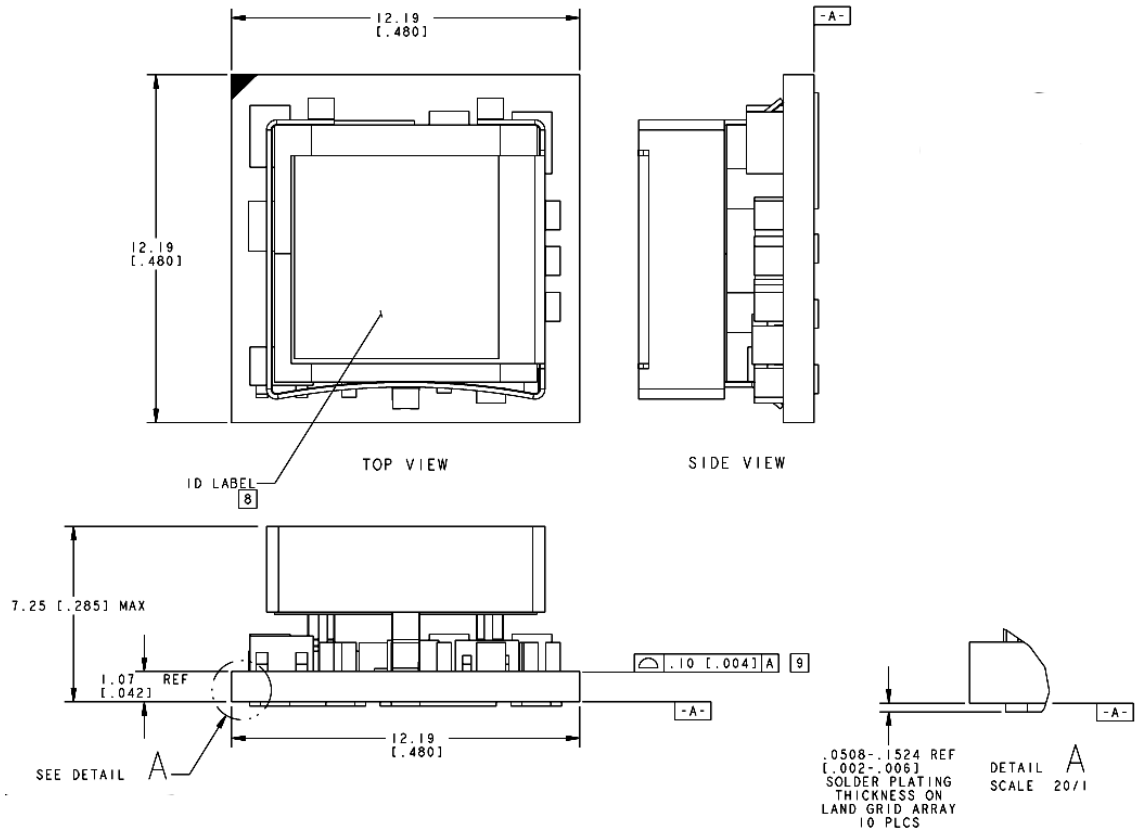

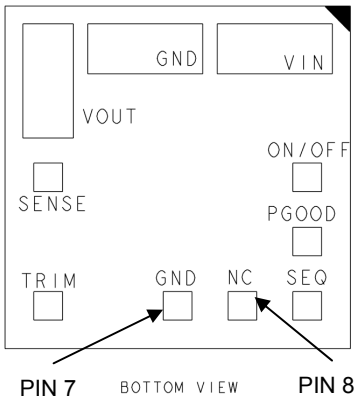

PIN	FUNCTION
1	ON/OFF
2	VIN
3	GND
4	VOUT
5	SENSE
6	TRIM
7	GND
8	NC
9	SEQ
10	PGOOD

Recommended Pad Layout

Dimensions are in millimeters and (inches).

Tolerances: x.x mm ± 0.5 mm (x.xx in. ± 0.02 in.) [unless otherwise indicated]
x.xx mm ± 0.25 mm (x.xxx in ± 0.010 in.)

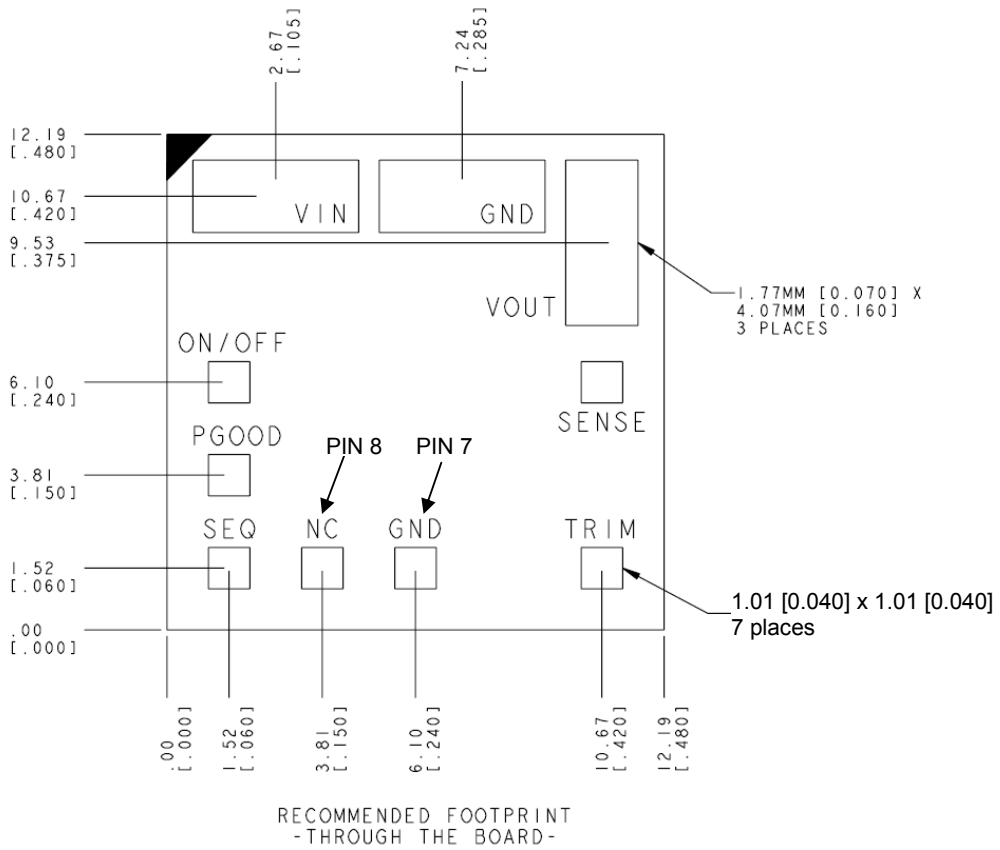

PIN	FUNCTION
1	ON/OFF
2	VIN
3	GND
4	VOUT
5	SENSE
6	TRIM
7	GND
8	NC
9	SEQ
10	PGOOD

Packaging Details

The 12V Pico TLynx™ 6A modules are supplied in tape & reel as standard. Modules are shipped in quantities of 400 modules per reel.

All Dimensions are in millimeters and (in inches).

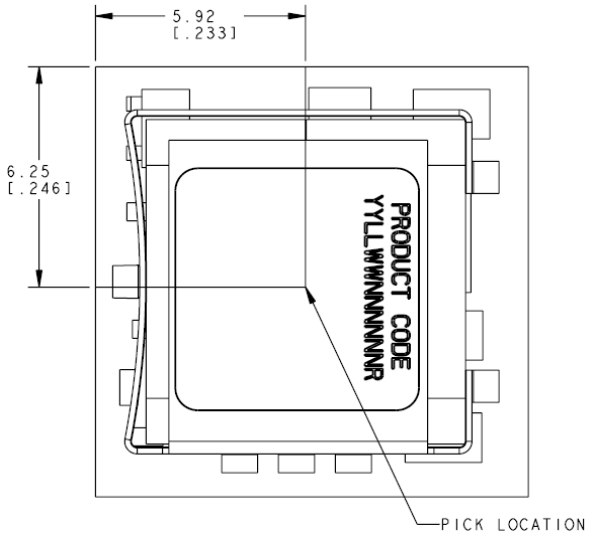

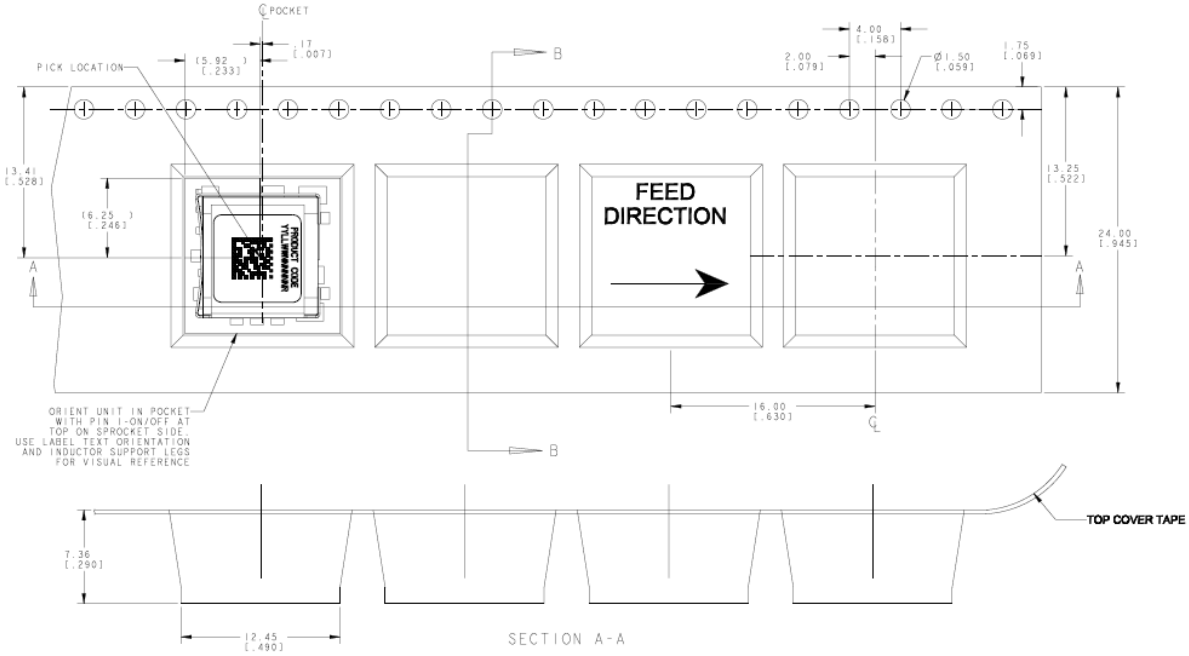

Reel Dimensions:

Outside Dimensions:	330.2 mm (13.00)
Inside Dimensions:	177.8 mm (7.00”)
Tape Width:	24.00 mm (0.945”)

Surface Mount Information

Pick and Place

The 12V Pico TLynx™ 6A modules use an open frame construction and are designed for a fully automated assembly process. The modules are fitted with a label designed to provide a large surface area for pick and place operations. The label meets all the requirements for surface mount processing, as well as safety standards, and is able to withstand reflow temperatures of up to 300°C. The label also carries product information such as product code, serial number and the location of manufacture.

Nozzle Recommendations

The module weight has been kept to a minimum by using open frame construction. Variables such as nozzle size, tip style, vacuum pressure and placement speed should be considered to optimize this process. The minimum recommended inside nozzle diameter for reliable operation is 3mm. The maximum nozzle outer diameter, which will safely fit within the allowable component spacing, is 7 mm.

Lead Free Soldering

The 12V Pico TLynx™ 6A modules are lead-free (Pb-free) and RoHS compliant and fully compatible in a Pb-free soldering process. Failure to observe the instructions below may result in the failure of or cause damage to the modules and can adversely affect long-term reliability.

Pb-free Reflow Profile

Power Systems will comply with J-STD-020 Rev. C (Moisture/Reflow Sensitivity Classification for Nonhermetic Solid State Surface Mount Devices) for both Pb-free solder profiles and MSL classification procedures. This standard provides a recommended forced-air-convection reflow profile based on the volume and thickness of the package (table 4-2). The suggested Pb-free solder paste is Sn/Ag/Cu (SAC). The recommended linear reflow profile using Sn/Ag/Cu solder is shown in Fig. 51. Soldering outside of the recommended profile requires testing to verify results and performance.

MSL Rating

The 12V Pico TLynx™ 6A modules have a MSL rating of 2.

Storage and Handling

The recommended storage environment and handling procedures for moisture-sensitive surface mount packages is detailed in J-STD-033 Rev. A (Handling, Packing, Shipping and Use of Moisture/Reflow Sensitive Surface Mount Devices). Moisture barrier bags (MBB) with desiccant are required for MSL ratings of 2 or greater. These sealed packages should not be broken until time of use. Once the original package is broken, the floor life of the product at conditions of ≤ 30°C and 60% relative humidity varies according to the MSL rating (see J-STD-033A). The shelf life for dry packed SMT packages will be a minimum of 12 months from the bag seal date, when stored at the following conditions: < 40° C, < 90% relative humidity.

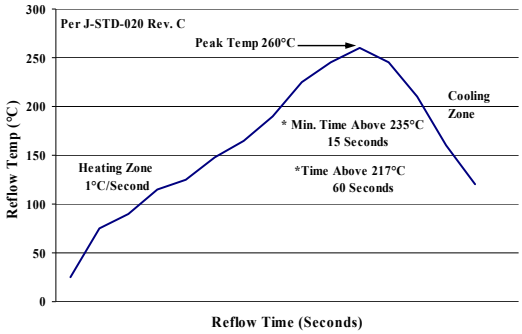

Figure 51. Recommended linear reflow profile using Sn/Ag/Cu solder.

Post Solder Cleaning and Drying Considerations

Post solder cleaning is usually the final circuit-board assembly process prior to electrical board testing. The result of inadequate cleaning and drying can affect both the reliability of a power module and the testability of the finished circuit-board assembly. For guidance on appropriate soldering, cleaning and drying procedures, refer to *Board Mounted Power Modules: Soldering and Cleaning* Application Note (AN04-001).

Ordering Information

Please contact your Lineage Power Sales Representative for pricing, availability and optional features.

Table 6. Device Codes

Device Code	Input Voltage Range	Output Voltage	Output Current	On/Off Logic	Sequencing	Comcodes
APTS006A0X-SRZ	4.5 – 14Vdc	0.59 – 5.5Vdc	6A	Negative	Yes	CC109126026
APTS006A0X4-SRZ	4.5 – 14Vdc	0.59 – 5.5Vdc	6A	Positive	Yes	CC109126034
APXS006A0X-SRZ	4.5 – 14Vdc	0.59 – 5.5Vdc	6A	Negative	No	CC109126001
APXS006A0X4-SRZ	4.5 – 14Vdc	0.59 – 5.5Vdc	6A	Positive	No	CC109126018
APXS006A0X-25SRZ*	4.5 – 14Vdc	0.59 – 5.5Vdc	6A	Negative	No	CC109142205
APXS006A0X-SRDZ	4.5 – 14Vdc	0.59 – 5.5Vdc	6A	Negative	No	CC109150240

*** Special codes, consult factory before ordering**

Table 7. Coding Scheme

TLynx family	Sequencing feature.	Input voltage range	Output current	Output voltage	On/Off logic	Options		ROHS Compliance
AP	**T**	**S**	**006A0**	**X**	**4**	**-SR**	**-D**	**Z**
	T = with Seq. X = w/o Seq.	S = 4.5 - 14V	6.0A	X = programmable output	4 = positive No entry = negative	S = Surface Mount R = Tape&Reel	D = 105C operating ambient, 40G operating shock as per MIL Std 810F	Z = ROHS6

World Wide Headquarters
Lineage Power Corporation
601 Shiloh Road, Plano, TX 75074, USA
+1-888-LINEAGE(546-3243)
(Outside U.S.A.: **+1-972-244-WATT(9288)**)
www.lineagepower.com
e-mail: techsupport1@lineagepower.com

Asia-Pacific Headquarters
Tel: +86.021.54279977*808

Europe, Middle-East and Africa Headquarters
Tel: +49.89.878067-280

India Headquarters
Tel: +91.80.28411633

Lineage Power reserves the right to make changes to the product(s) or information contained herein without notice. No liability is assumed as a result of their use or application. No rights under any patent accompany the sale of any such product(s) or information.

Lineage Power DC-DC products are protected under various patents. Information on these patents is available at www.lineagepower.com/patents.

© 2010 Lineage Power Corporation, (Plano, Texas) All International Rights Reserved.

Компания «ЭлектроПласт» предлагает заключение долгосрочных отношений при поставках импортных электронных компонентов на взаимовыгодных условиях!

Наши преимущества:

- Оперативные поставки широкого спектра электронных компонентов отечественного и импортного производства напрямую от производителей и с крупнейших мировых складов;
- Поставка более 17-ти миллионов наименований электронных компонентов;
- Поставка сложных, дефицитных, либо снятых с производства позиций;
- Оперативные сроки поставки под заказ (от 5 рабочих дней);
- Экспресс доставка в любую точку России;
- Техническая поддержка проекта, помощь в подборе аналогов, поставка прототипов;
- Система менеджмента качества сертифицирована по Международному стандарту ISO 9001;
- Лицензия ФСБ на осуществление работ с использованием сведений, составляющих государственную тайну;
- Поставка специализированных компонентов (Xilinx, Altera, Analog Devices, Intersil, Interpoint, Microsemi, Aeroflex, Peregrine, Syfer, Eurofarad, Texas Instrument, Miteq, Cobham, E2V, MA-COM, Hittite, Mini-Circuits,General Dynamics и др.);

Помимо этого, одним из направлений компании «ЭлектроПласт» является направление «Источники питания». Мы предлагаем Вам помощь Конструкторского отдела:

- Подбор оптимального решения, техническое обоснование при выборе компонента;
- Подбор аналогов;
- Консультации по применению компонента;
- Поставка образцов и прототипов;
- Техническая поддержка проекта;
- Защита от снятия компонента с производства.

Как с нами связаться

Телефон: 8 (812) 309 58 32 (многоканальный)
Факс: 8 (812) 320-02-42
Электронная почта: org@eplast1.ru
Адрес: 198099, г. Санкт-Петербург, ул. Калинина, дом 2, корпус 4, литера А.