molex
one company › a world of innovation

This document was generated on 04/08/2010

PLEASE CHECK WWW.MOLEX.COM FOR LATEST PART INFORMATION

Part Number: 0010883041

Status: Active

Description: 2.54mm (.100") Pitch C-Grid® Breakaway Header, High Profile, Dual Row, Right Angle, 4 Circuits, 6.10mm (.240") Mating Pin Length, Tin (Sn) Plating

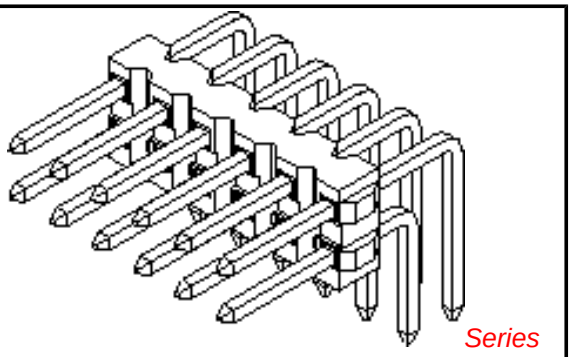

image - Reference only

Documents:

3D Model
Packaging Specification (PDF)
Drawing (PDF)
Product Specification PS-70216 (PDF)
RoHS Certificate of Compliance (PDF)

Agency Certification

CSA	LR19980
UL	E29179

General

Product Family	PCB Headers
Series	70216
Application	Board-to-Board, Wire-to-Board
Product Name	C-Grid®

Physical

Breakaway	Yes
Circuits (Loaded)	4
Circuits (maximum)	4
Durability (mating cycles max)	25
Flammability	94V-0
Glow-Wire Compliant	No
Lock to Mating Part	None
Material - Metal	Brass, Phosphor Bronze
Material - Plating Mating	Tin
Material - Plating Termination	Tin
Number of Rows	2
Orientation	Right Angle
PC Tail Length (in)	0.110 In
PC Tail Length (mm)	2.79 mm
PCB Locator	No
PCB Retention	None
Packaging Type	Tube
Pitch - Mating Interface (in)	0.100 In
Pitch - Mating Interface (mm)	2.54 mm
Plating min: Mating (µin)	150
Plating min: Mating (µm)	3.75
Plating min: Termination (µin)	150
Plating min: Termination (µm)	3.75
Polarized to Mating Part	No
Polarized to PCB	No
Shrouded	No
Stackable	Yes
Temperature Range - Operating	-40°C to +105°C
Termination Interface: Style	Through Hole

Electrical

Current - Maximum per Contact	3A
Voltage - Maximum	250V

Solder Process Data

Duration at Max. Process Temperature (seconds)	5

EU RoHS
ELV and RoHS Compliant
REACH SVHC
Not Reviewed
Halogen-Free Status
Not Reviewed

China RoHS

Need more information on product environmental compliance?

Email productcompliance@molex.com
For a multiple part number RoHS Certificate of Compliance, click here

Please visit the Contact Us section for any non-product compliance questions.

Search Parts in this Series
70216Series

Lead-free Process Capability	Wave Capable (TH only)
Max. Cycles at Max. Process Temperature	1
Process Temperature max. C	235

Material Info

Old Part Number	70216-0079

Reference - Drawing Numbers

Product Specification	PS-70216
Sales Drawing	SD-70216-001

This document was generated on 04/08/2010

PLEASE CHECK WWW.MOLEX.COM FOR LATEST PART INFORMATION

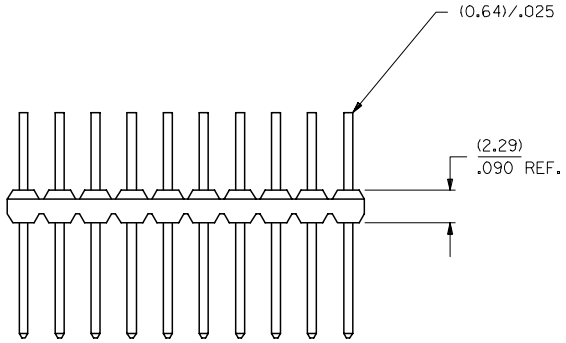

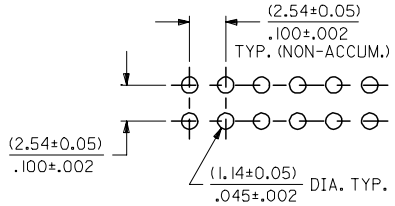

RECOMMENDED P.C. BOARD HOLE LAYOUT

CKT. SIZE	DIM. A		DIM. B	
	MM	INCH	MM	INCH
04	4.83	.190	2.54	.100
06	7.37	.290	5.08	.200
08	9.91	.390	7.62	.300
10	12.45	.490	10.16	.400
12	14.99	.590	12.70	.500
14	17.53	.690	15.24	.600
16	20.07	.790	17.78	.700
18	22.61	.890	20.32	.800
20	25.15	.990	22.86	.900
22	27.69	1.090	25.40	1.000
24	30.23	1.190	27.94	1.100
26	32.77	1.290	30.48	1.200
28	35.31	1.390	33.02	1.300
30	37.85	1.490	35.56	1.400

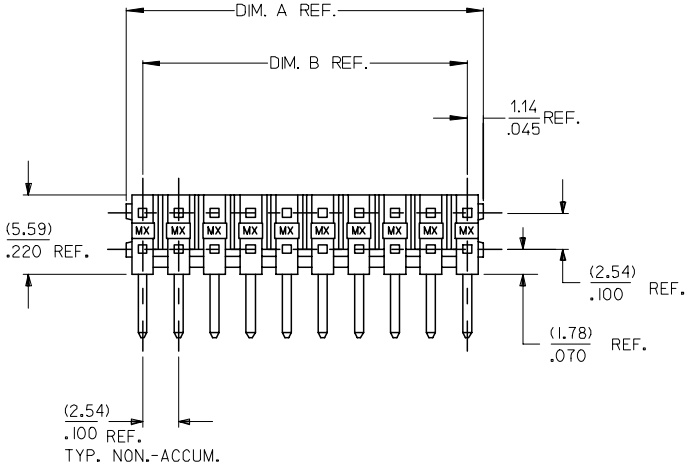

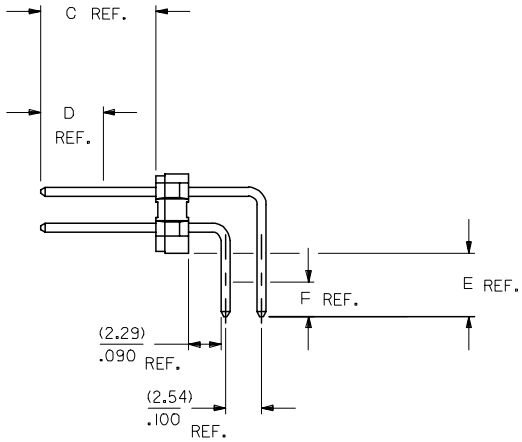

NOTES:
1. MATERIAL: WAFER - GLASS FILLED. POLYESTER. 94V-0, COLOR: BLACK.
   PINS - PHOS. BRONZE.
2. FINISH:
   TIN - 0.00381/.000150 MINIMUM TIN OVER 0.00127/.000050 MINIMUM NICKEL OVERALL.
   15 GOLD - 0.00038/.000015 MINIMUM GOLD PLATE IN SELECTED AREA AND
   0.00191/.000075 MINIMUM TIN IN SELECTED AREA OVER 0.00127/.000050
   MINIMUM NICKEL OVERALL.
   30 GOLD - 0.00076/.000030 MINIMUM GOLD PLATE IN SELECTE AREA AND
   0.00191/.000075 MINIMUM TIN IN SELECTED AREA OVER 0.00121/.000050
   MINIMUM NICKEL OVERALL.
3. PRODUCT SPECIFICATION: PS-70216.
4. PACKAGING SPECIFICATION: FOR 4 THROUGH 8 CIRCUIT PARTS US PK-70873-0353.
   FOR 10 CIRCUITS AND OVER USE PK-70873-0075.
5. PIN PUSHOUT FORCE: 4 LBS. MINIMUM.
6. FOR ILLUSTRATION PURPOSES, 20 (DUAL 10) CIRCUIT SIZE WAFER IS SHOWN.
7. PINS MUST MEET SOLDERABILITY SPEC. NO. 152.
8. WAFER TO BE FLAT WITHIN (0.03 MM/CM) OR .003 IN./IN.
9. FOR ASSEMBLIES WITH VOIDED PINS; CONTACT MOLEX SALES REPRESENTATIVE.
10. THIS PART CONFORMS TO CLASS B REQUIREMTENTS OF
    COSMETIC SPECIFICATION PS-45499-002.

SHT.	REV.
2-*	A1
1	A1

ADD NOTE 10
EC NO: UCP2007-1509 2006/12/19
DRWN:PRIDDER 2006/12/19
CHKD:ADERR 2006/12/19
APPR:FSMITH 2006/12/20
DESCRIPTION
REV
A1

QUALITY SYMBOLS
▼=0
▽=0

GENERAL TOLERANCES (UNLESS SPECIFIED)

	mm	INCH
4 PLACES	± ---	± ---
3 PLACES	± ---	± .005
2 PLACES	± 0.13	± .01
1 PLACE	± 0.25	± ---
ANGULAR ±1/2°		

DRAFT WHERE APPLICABLE MUST REMAIN WITHIN DIMENSIONS

DIMENSION STYLE: MM/IN
SCALE: 4:1
DESIGN UNITS: INCH
THIRD ANGLE PROJECTION

DRAWN BY: RCB DATE: 1994/05/18
CHECKED BY DATE
APPROVED BY DATE

TITLE: RT. ANG. WAFER ASS'Y 2.54/.100 GRID, DUAL ROW BREAKAWAY 0.64/.025 PINS

molex MOLEX INCORPORATED

MATERIAL NO.: SEE CHART
DOCUMENT NO.: SD-70216-001
SHEET NO.: 1 OF *
SIZE: C

THIS DRAWING CONTAINS INFORMATION THAT IS PROPRIETARY TO MOLEX INCORPORATED AND SHOULD NOT BE USED WITHOUT WRITTEN PERMISSION

tb_frame_C_P_ME_T
Rev. E 2006/04/15

ENG. NO: A-70216-0079/0092		
DIM. C		(6.10)/.240
DIM. E (REF.)		(2.79)/.110
FINISH		TIN
CONNECTOR END PLATING		TIN
DIM. D (MEASURE PT.)		(2.54)/.100
P.C. BOARD END PLATING		TIN
DIM. F (MEASURE PT.)		(1.27)/.050
PACKAGING		SEE NOTE 4 ON SHT. 1
CKTS	EDP NUMBER	ENG. NUMBER
04	10-88-3041	A-70216-0079
06	10-88-3061	A-70216-0080
08	10-88-3081	A-70216-0081
10	10-88-3101	A-70216-0082
12	10-88-3121	A-70216-0083
14	10-88-3141	A-70216-0084
16	10-88-3161	A-70216-0085
18	10-88-3181	A-70216-0086
20	10-88-3201	A-70216-0087
22	10-88-3221	A-70216-0088
24	10-88-3241	A-70216-0089
26	10-88-3261	A-70216-0090
28	10-88-3281	A-70216-0091
30	10-88-3301	A-70216-0092

ENG. NO: A-70216-0118/0131		
DIM. C		(8.13)/.320
DIM. E (REF.)		(2.79)/.110
FINISH		TIN
CONNECTOR END PLATING		TIN
DIM. D (MEASURE PT.)		(4.57)/.180
P.C. BOARD END PLATING		TIN
DIM. F (MEASURE PT.)		(1.27)/.050
PACKAGING		SEE NOTE 4 ON SHT. 1
CKTS	EDP NUMBER	ENG. NUMBER
04	10-88-3042	A-70216-0118
06	10-88-3062	A-70216-0119
08	10-88-3082	A-70216-0120
10	10-88-3102	A-70216-0121
12	10-88-3122	A-70216-0122
14	10-88-3142	A-70216-0123
16	10-88-3162	A-70216-0124
18	10-88-3182	A-70216-0125
20	10-88-3202	A-70216-0126
22	10-88-3222	A-70216-0127
24	10-88-3242	A-70216-0128
26	10-88-3262	A-70216-0129
28	10-88-3282	A-70216-0130
30	10-88-3302	A-70216-0131

ENG. NO: A-70216-0235/0248		
DIM. C		(6.10)/.240
DIM. E (REF.)		(2.79)/.110
FINISH		15 GOLD
CONNECTOR END PLATING		GOLD
DIM. D (MEASURE PT.)		(2.54)/.100
P.C. BOARD END PLATING		TIN
DIM. F (MEASURE PT.)		(1.27)/.050
PACKAGING		SEE NOTE 4 ON SHT. 1
CKTS	EDP NUMBER	ENG. NUMBER
04	10-89-4042	A-70216-0235
06	10-89-4062	A-70216-0236
08	10-89-4082	A-70216-0237
10	10-89-4102	A-70216-0238
12	10-89-4122	A-70216-0239
14	10-89-4142	A-70216-0240
16	10-89-4162	A-70216-0241
18	10-89-4182	A-70216-0242
20	10-89-4202	A-70216-0243
22	10-89-4222	A-70216-0244
24	10-89-4242	A-70216-0245
26	10-89-4262	A-70216-0246
28	10-89-4282	A-70216-0247
30	10-89-4302	A-70216-0248

REV:	ECR/ECN INFORMATION	TITLE:	SHEET No.
A1	EC No: **UCP2007-1509** DATE: **2006-12-18**	RT. ANG. WAFER ASS'Y 2.54/.100 GRID, DUAL ROW BREAKAWAY 0.64/.025 PINS	**- 2 -**

DOCUMENT NUMBER:	CREATED / REVISED BY:	CHECKED BY:	APPROVED BY:
SD-70216-001	**PRIDDER**	**ADERR**	**FSMITH**

ENG. NO: A-70216-0274/0287		
DIM. C		(8.13)/.320
DIM. E (REF.)		(2.79)/.110
FINISH		15 GOLD
CONNECTOR END PLATING		GOLD
DIM. D (MEASURE PT.)		(4.57)/.180
P.C. BOARD END PLATING		TIN
DIM. F (MEASURE PT.)		(1.27)/.050
PACKAGING		SEE NOTE 4 ON SHT. 1
CKTS	EDP NUMBER	ENG. NUMBER
04	10-89-4043	A-70216-0274
06	10-89-4063	A-70216-0275
08	10-89-4083	A-70216-0276
10	10-89-4103	A-70216-0277
12	10-89-4123	A-70216-0278
14	10-89-4143	A-70216-0279
16	10-89-4163	A-70216-0280
18	10-89-4183	A-70216-0281
20	10-89-4203	A-70216-0282
22	10-89-4223	A-70216-0283
24	10-89-4243	A-70216-0284
26	10-89-4263	A-70216-0285
28	10-89-4283	A-70216-0286
30	10-89-4303	A-70216-0287

ENG. NO: A-70216-0391/0404		
DIM. C		(6.10)/.240
DIM. E (REF.)		(2.79)/.110
FINISH		30 GOLD
CONNECTOR END PLATING		GOLD
DIM. D (MEASURE PT.)		(2.54)/.100
P.C. BOARD END PLATING		TIN
DIM. F (MEASURE PT.)		(1.27)/.050
PACKAGING		SEE NOTE 4 ON SHT. 1
CKTS	EDP NUMBER	ENG. NUMBER
04	10-89-4046	A-70216-0391
06	10-89-4066	A-70216-0392
08	10-89-4086	A-70216-0393
10	10-89-4106	A-70216-0394
12	10-89-4126	A-70216-0395
14	10-89-4146	A-70216-0396
16	10-89-4166	A-70216-0397
18	10-89-4186	A-70216-0398
20	10-89-4206	A-70216-0399
22	10-89-4226	A-70216-0400
24	10-89-4246	A-70216-0401
26	10-89-4266	A-70216-0402
28	10-89-4286	A-70216-0403
30	10-89-4306	A-70216-0404

ENG. NO: A-70216-0430/0443		
DIM. C		(8.13)/.320
DIM. E (REF.)		(2.79)/.110
FINISH		30 GOLD
CONNECTOR END PLATING		GOLD
DIM. D (MEASURE PT.)		(4.57)/.180
P.C. BOARD END PLATING		TIN
DIM. F (MEASURE PT.)		(1.27)/.050
PACKAGING		SEE NOTE 4 ON SHT. 1
CKTS	EDP NUMBER	ENG. NUMBER
04	10-89-4047	A-70216-0430
06	10-89-4067	A-70216-0431
08	10-89-4087	A-70216-0432
10	10-89-4107	A-70216-0433
12	10-89-4127	A-70216-0434
14	10-89-4147	A-70216-0435
16	10-89-4167	A-70216-0436
18	10-89-4187	A-70216-0437
20	10-89-4207	A-70216-0438
22	10-89-4227	A-70216-0439
24	10-89-4247	A-70216-0440
26	10-89-4267	A-70216-0441
28	10-89-4287	A-70216-0442
30	10-89-4307	A-70216-0443

REV:	ECR/ECN INFORMATION	TITLE:	SHEET No.
A1	EC No: **UCP2007-1509** DATE: **2006-12-18**	RT. ANG. WAFER ASS'Y 2.54/.100 GRID, DUAL ROW BREAKAWAY 0.64/.025 PINS	**- 3 -**

DOCUMENT NUMBER:	CREATED / REVISED BY:	CHECKED BY:	APPROVED BY:
SD-70216-001	**PRIDDER**	**ADERR**	**FSMITH**

ENG. NO: A-70216-0313/0326		
DIM. C	(6.10)/..240	
DIM. E (REF.)	(4.19)/.165	
FINISH	15 GOLD	
CONNECTOR END PLATING	GOLD	
DIM. D (MEASURE PT.)	(4.57)/.180	
P.C. BOARD END PLATING	TIN	
DIM. F (MEASURE PT.)	(1.27)/.050	
PACKAGING	SEE NOTE 4 ON SHT. 1	
CKTS	EDP NUMBER	ENG. NUMBER
04		
06		
08		
10		
12		
14		
16		
18		
20		
22		
24		
26		
28		
30	50-34-8535	A-70216-0326

ENG. NO: A-70216-		
DIM. C		
DIM. E (REF.)		
FINISH		
CONNECTOR END PLATING		
DIM. D (MEASURE PT.)		
P.C. BOARD END PLATING		
DIM. F (MEASURE PT.)		
PACKAGING		
CKTS	EDP NUMBER	ENG. NUMBER
04		
06		
08		
10		
12		
14		
16		
18		
20		
22		
24		
26		
28		
30		

ENG. NO: A-70216-		
DIM. C		
DIM. E (REF.)		
FINISH		
CONNECTOR END PLATING		
DIM. D (MEASURE PT.)		
P.C. BOARD END PLATING		
DIM. F (MEASURE PT.)		
PACKAGING		
CKTS	EDP NUMBER	ENG. NUMBER
04		
06		
08		
10		
12		
14		
16		
18		
20		
22		
24		
26		
28		
30		

REV:	ECR/ECN INFORMATION	TITLE:	SHEET No.
A1	EC No: **UCP2007-1509** DATE: **2006-12-18**	RT. ANG. WAFER ASS'Y 2.54/.100 GRID, DUAL ROW BREAKAWAY 0.64/.025 PINS	**- 4 -**

DOCUMENT NUMBER:	CREATED / REVISED BY:	CHECKED BY:	APPROVED BY:
SD-70216-001	**PRIDDER**	**ADERR**	**FSMITH**

Компания «ЭлектроПласт» предлагает заключение долгосрочных отношений при поставках импортных электронных компонентов на взаимовыгодных условиях!

Наши преимущества:

- Оперативные поставки широкого спектра электронных компонентов отечественного и импортного производства напрямую от производителей и с крупнейших мировых складов;
- Поставка более 17-ти миллионов наименований электронных компонентов;
- Поставка сложных, дефицитных, либо снятых с производства позиций;
- Оперативные сроки поставки под заказ (от 5 рабочих дней);
- Экспресс доставка в любую точку России;
- Техническая поддержка проекта, помощь в подборе аналогов, поставка прототипов;
- Система менеджмента качества сертифицирована по Международному стандарту ISO 9001;
- Лицензия ФСБ на осуществление работ с использованием сведений, составляющих государственную тайну;
- Поставка специализированных компонентов (Xilinx, Altera, Analog Devices, Intersil, Interpoint, Microsemi, Aeroflex, Peregrine, Syfer, Eurofarad, Texas Instrument, Miteq, Cobham, E2V, MA-COM, Hittite, Mini-Circuits,General Dynamics и др.);

Помимо этого, одним из направлений компании «ЭлектроПласт» является направление «Источники питания». Мы предлагаем Вам помощь Конструкторского отдела:

- Подбор оптимального решения, техническое обоснование при выборе компонента;
- Подбор аналогов;
- Консультации по применению компонента;
- Поставка образцов и прототипов;
- Техническая поддержка проекта;
- Защита от снятия компонента с производства.

Как с нами связаться

Телефон: 8 (812) 309 58 32 (многоканальный)
Факс: 8 (812) 320-02-42
Электронная почта: org@eplast1.ru
Адрес: 198099, г. Санкт-Петербург, ул. Калинина, дом 2, корпус 4, литера А.