THIS DRAWING IS UNPUBLISHED | RELEASED FOR PUBLICATION 2007
© COPYRIGHT 2007 - ALL RIGHTS RESERVED

| LOC | DIST |
|---|---|
| A1 | - |

REVISIONS

| P | LTR | DESCRIPTION | DATE | DWN | APVD |
|---|---|---|---|---|---|
| | A13 | Column Sealing plug and Text SINGLE WIRE SEAL added. | 30JAN2009 | Fru | Brun |
| | A14 | Wrong dimensions in area B5-6 corrected to H4.6 and K=5.1 | 27JAN2010 | Kirs. | Schus |
| | A15 | Design 2 added. | 21DEC2011 | Kirs. | Schus |
| | A16 | Designs adapted. Crimp height to PN 962843 added. Drawing corrected. | 01OCT2012 | Kirs. | Merz |

## STRIP FORM
Bandware

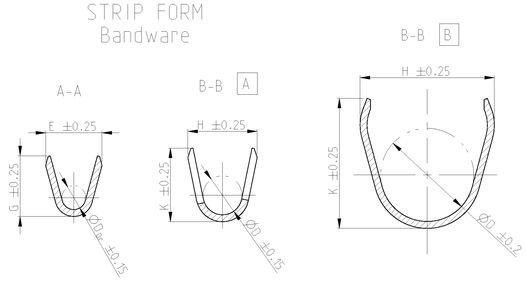


## WIRE CRIMP
Drahtcrimp

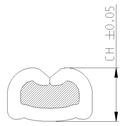


## LOOSE PIECE
Einzelausfuehrung

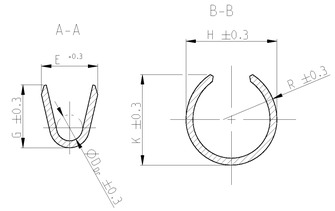


## FLR-/FLK-WIRE
## FLR-/FLK-Leitung

DESIGN 1
Ausfuehrung 1

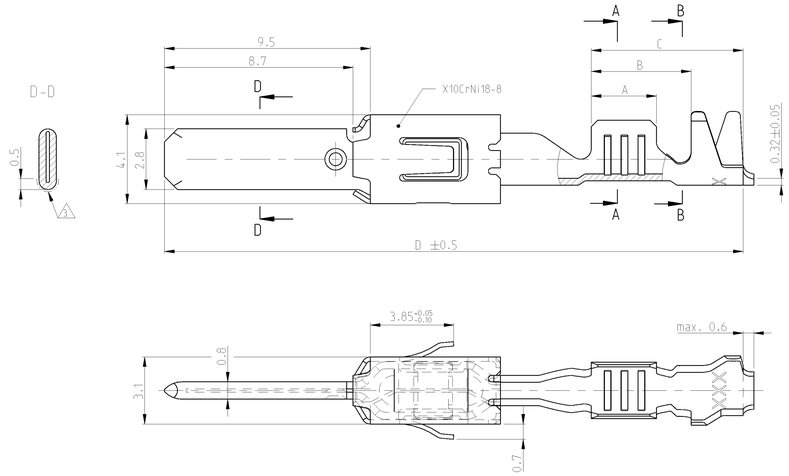


## SINGLE WIRE SEAL
## Einzeldichtungssystem

DESIGN 4
Ausfuehrung 4

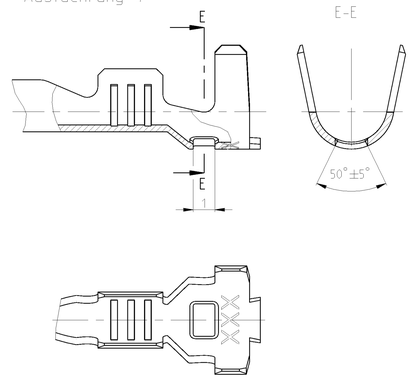


NOTES
Bemerkungen

1. CONTACT AREA PRE SILVER MIN. 3µm
   CANTILEVER SPRING PLAIN
   Kontaktzone vorversilbert min. 3µm
   Ueberfeder blank
2. CONTACT BODY Ni-PLATING MIN. 0.5µm; CONTACT AREA PRE-GOLD MIN. 0.6µm
   OVER NICKEL; CRIMP AREA PRE-TIN
   CANTILEVER SPRING PLAIN
   Kontaktkoerper vernickelt min. 0.5µm; Kontaktzone vorvergoldet min. 0.6µm ueber Nickel
   Crimpzone vorverzinnt; Ueberfeder blank
3. — · · — · · — IN THIS AREA CRACK SHAPING AT THE SURFACE PERMISSIBLE
   In diesem Bereich Rissbildung in der Oberflaeche zulaessig
4. PRE-TIN MIN. 1µm; CANTILEVER SPRING PLAIN
   vorverzinnt min. 1µm; Ueberfeder blank
5. AWG 12 TXL 828905-1 OR / oder 282536-1
   AWG 12 GXL 638865-1
6. ATTENTION! CONSTRUCTION OF THE CONTACT CAVITY IN THE AREA
   OF THE SINGLE WIRE SEAL IS Ø6.4 +0.1 -0.05
   Achtung! Die Kammer ist im Bereich der Einzeldichtung
   auf Ø6.4 +0.1 -0.05 auszulegen
7. PUNCHED WITH VOLATILIZING STAMPING-OIL
   Gestanzt mit verfluechtigendem Stanzoel

DESIGN 2
Ausfuehrung 2

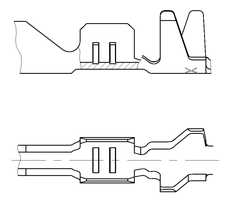

DESIGN 5
Ausfuehrung 5

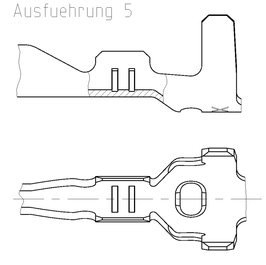

DESIGN 3
Ausfuehrung 3

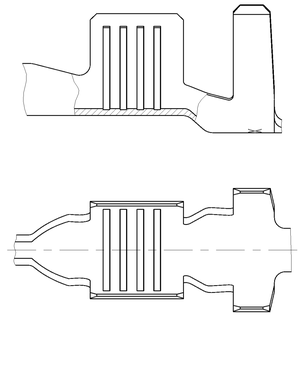

DESIGN 6
Ausfuehrung 6

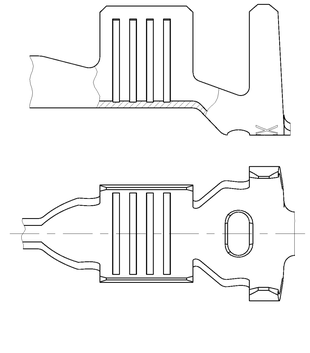

| | TE ORDER-NO. STRIPFORM Bandware | REV | TE ORDER-NO LOOSE PIECE Einzelausfuehrung | DESIGN Ausfuehrung | MATERIAL Werkstoff | SURFACE Oberflaeche | DGB mm² | INSULATIONØ Isolationsø mm | STRIP FORM WIRE CRIMP Drahtcrimp | STRIP FORM INSUL. CRIMP Isolationscrimp | WIRE CRIMP HEIGTH CH Drahtcrimphoehe CH | LOOSE PIECE WIRE CRIMP Drahtcrimp | LOOSE PIECE INSUL. CRIMP Isolationscrimp | APPLICATION TOOL Anschlagwerkzeug | HAND TOOL Handzange | A | B | C | D | TE ORDER-NO. SINGLE WIRE SEAL Einzeldichtungssystem (CAVITY DIAMETER) (Kammerdurchmesser) | TE ORDER-NO. SEALING PLUG Blindstopfen |
|---|---|---|---|---|---|---|---|---|---|---|---|---|---|---|---|---|---|---|---|---|---|
| | | | | | | | | | SEE / siehe SECTION A-A Schnitt A-A | SEE / siehe SECTION B-B Schnitt B-B | SEE / siehe WIRE CRIMP Drahtcrimp | SEE / siehe SECTION A-A Schnitt A-A | SEE / siehe SECTION B-B Schnitt B-B | | | | | | | | |
| SINGLE WIRE SEAL / Einzeldichtungssystem | 1-1719504-2 | A | 1-1719503-2 | 4 | CuSn4 | 1 | 12 AWG | max. 3.0 | E = 4.0<br>G = 4.2<br>$D_{Br}$ = 2.0 | A H = 5.3<br>K = 5.0<br>D = 3.6 | AWG 12 = 2.0 | - | - | 1852291-3 | - | 3.5 | 6.0 | 7.6 | 26.8 | 5 | 828922-1 |
| | 1-1719504-1 | A | 1-1719503-1 | 4 | | 4 | | | | | | | | | | | | | | | |
| | 3-968947-1 | A | 3-968966-1 | 6 | CuSn0.20 | 4 | >2.5 - 4.0 FLR | max. 3.7 | E = 4.5<br>G = 4.7<br>$D_{Br}$ = 2.3 | B H = 6.2<br>K = 6.0<br>D = 4.3 | 4.0 mm² = 2.25 | DIMENSION SEE STRIP FORM<br>Masse siehe Bandware | | MQC APPLICATOR<br>2-541537-2 | 539635-1<br>MATRIZE :<br>539727-2 | 4.3 | 6.9 | 8.5 | 28.5 | 828985<br>(Ø6.4)<br>6 | 828986-1 |
| | 2-968947-2 | A | 2-968966-2 | 6 | CuFe | 1 | | | | | | | | | | | | | | | |
| | 2-968947-1 | A | 2-968966-1 | 6 | | 4 | | | | | | | | | | | | | | | |
| | 1-968947-2 | A | 1-968966-2 | 6 | CuSn4 | 1 | | | | | | | | | | | | | | | |
| | 1-968947-1 | A | 1-968966-1 | 6 | | 4 | | | | | | | | | | | | | | | |
| | 2-962916-3 | E | 2-963749-3 | 4 | CuFe | 2 | >1.0 - 2.5 FLR | max. 3.0 | E = 3.6<br>G = 3.8<br>$D_{Br}$ = 1.7 | A H = 5.3<br>K = 5.0<br>D = 3.6 | 2.5 mm² = 1.88<br>2.0 mm² = 1.73<br>1.5 mm² = 1.58 | E = 2.8<br>G = 3.9<br>$D_{Br}$ = 1.7 | H = 4.8<br>K = 4.5<br>R = 2.8 | MQC APPLICATOR<br>2-878560-2 | 734440-1 | 3.5 | 6.0 | 7.6 | 26.8 | 828905<br>(Ø5.0) | 828922-1 |
| | 2-962916-2 | E | 2-963749-2 | 4 | | 1 | | | | | | | | | | | | | | | |
| | 2-962916-1 | E | 2-963749-1 | 4 | | 4 | | | | | | | | | | | | | | | |
| | 1-962916-3 | E | 1-963749-3 | 4 | CuSn4 | 2 | | | | | | | | | | | | | | | |
| | 1-962916-2 | E | 1-963749-2 | 4 | | 1 | | | | | | | | | | | | | | | |
| | 1-962916-1 | E | 1-963749-1 | 4 | | 4 | | | | | | | | | | | | | | | |
| | 2-962915-3 | E | 2-963748-3 | 4 | CuFe | 2 | 0.5 - 1.0 FLR | max. 2.1 | E = 2.6<br>G = 2.9<br>$D_{Br}$ = 1.2 | A H = 5.0<br>K = 4.8<br>D = 3.3 | 1.0 mm² = 1.36<br>0.75 mm² = 1.27<br>0.5 mm² = 1.18 | E = 2.2<br>G = 2.9<br>$D_{Br}$ = 1.1 | H = 4.6<br>K = 4.3<br>R = 2.3 | MQC APPLICATOR<br>2-878559-2 | 734438-1 | 3.0 | 5.4 | 7.0 | 26.8 | 828904<br>(Ø5.0) | |
| | 2-962915-2 | E | 2-963748-2 | 4 | | 1 | | | | | | | | | | | | | | | |
| | 2-962915-1 | E | 2-963748-1 | 4 | | 4 | | | | | | | | | | | | | | | |
| | 6-962915-6 | E | - | 4 | CuSn4 | 3 3 | | | | | | | | | | | | | | | |
| | 1-962915-3 | E | 1-963748-3 | 4 | | 2 | | | | | | | | | | | | | | | |
| | 1-962915-2 | E | 1-963748-2 | 4 | | 1 | | | | | | | | | | | | | | | |
| | 1-962915-1 | E | 1-963748-1 | 4 | | 4 | | | | | | | | | | | | | | | |
| | 1-965982-3 | A | 1-965983-3 | 5 | CuSn4 | 2 | 0.2 - 0.5 FLR | max. 2.1 | E = 2.1<br>G = 2.1<br>$D_{Br}$ = 0.8 | A H = 4.7<br>K = 4.5<br>D = 3.2 | 0.5 mm² = 1.12<br>0.35 mm² = 1.05<br>0.2 mm² = 0.98 | E = 1.7<br>G = 2.15<br>$D_{Br}$ = 0.8 | H = 4.2<br>K = 4.15<br>R = 2.4 | MQC APPLICATOR<br>2-878558-2 | 539635-1<br>MATRIZE :<br>539737-2 | 2.5 | 4.9 | 6.5 | 26.8 | 828904<br>(Ø5.0) | |
| | 1-965982-1 | A | 1-965983-1 | 5 | | 4 | | | | | | | | | | | | | | | |
| UNSEALED / ungedichtet | 3-968946-1 | A | 3-968965-1 | 3 | CuSn0.20 | 4 | >2.5 - 4.0 FLR | 2.7 - 3.7 | E = 4.5<br>G = 4.7<br>$D_{Br}$ = 2.3 | A H = 5.7<br>K = 5.9<br>D = 3.3 | 4.0 mm² = 2.25 | E = 3.4<br>G = 4.7<br>$D_{Br}$ = 2.3 | H = 4.6<br>K = 5.1<br>R = 2.6 | MQC APPLICATOR<br>2-541534-2 | 539635-1<br>MATRIZE :<br>539723-2 | 4.3 | 6.6 | 8.5 | 28.5 | | |
| | 2-968946-2 | A | 2-968965-2 | 3 | CuFe | 1 | | | | | | | | | | | | | | | |
| | 2-968946-1 | A | 2-968965-1 | 3 | | 4 | | | | | | | | | | | | | | | |
| | 1-968946-2 | A | 1-968965-2 | 3 | CuSn4 | 1 | | | | | | | | | | | | | | | |
| | 1-968946-1 | A | 1-968965-1 | 3 | | 4 | | | | | | | | | | | | | | | |
| | 2-962843-3 | C | 2-963747-3 | 1 | CuFe | 2 | >1.0 - 2.5 FLK | 2.4 - 3.7 | E = 3.6<br>G = 3.8<br>$D_{Br}$ = 1.7 | A H = 5.5<br>K = 5.7<br>D = 3.2 | 2.5 mm² = 1.88<br>2.0 mm² = 1.73<br>1.5 mm² = 1.58 | E = 2.8<br>G = 3.9<br>$D_{Br}$ = 1.7 | H = 4.2<br>K = 5.1<br>R = 2.4 | MQC APPLICATOR<br>2-878552-2 | 734417-3 | 3.6 | 5.2 | 8.9 | 28.6 | | |
| | 2-962843-2 | C | 2-963747-2 | 1 | | 1 | | | | | | | | | | | | | | | |
| | 2-962843-1 | C | 2-963747-1 | 1 | | 4 | | | | | | | | | | | | | | | |
| | 1-962843-3 | C | 1-963747-3 | 1 | CuSn4 | 2 | | | | | | | | | | | | | | | |
| | 1-962843-2 | C | 1-963747-2 | 1 | | 1 | | | | | | | | | | | | | | | |
| | 1-962843-1 | C | 1-963747-1 | 1 | | 4 | | | | | | | | | | | | | | | |
| | 2-962842-3 | E | - | 1 | CuFe | 2 | >1.0 - 2.5 FLR | 2.1 - 2.9 | E = 3.6<br>G = 3.8<br>$D_{Br}$ = 1.7 | A H = 4.3<br>K = 4.5<br>D = 2.6 | 2.5 mm² = 1.88<br>2.0 mm² = 1.73<br>1.5 mm² = 1.58 | E = 2.8<br>G = 3.9<br>$D_{Br}$ = 1.7 | H = 3.6<br>K = 4.1<br>R = 2.1 | MQC APPLICATOR<br>2-878551-2 | 734417-2 | 3.6 | 5.2 | 8.2 | 27.9 | | |
| | 2-962842-2 | F | - | 1 | | 1 | | | | | | | | | | | | | | | |
| | 2-962842-1 | E | - | 1 | | 4 | | | | | | | | | | | | | | | |
| | 1-962842-3 | E | - | 1 | CuSn4 | 2 | | | | | | | | | | | | | | | |
| | 1-962842-2 | E | 1-963746-2 | 1 | | 1 | | | | | | | | | | | | | | | |
| | 1-962842-1 | E | 1-963746-1 | 1 | | 4 | | | | | | | | | | | | | | | |
| | 2-962841-3 | F | - | 1 | CuFe | 2 | 0.5 - 1.0 FLR | 1.4 - 2.1 | E = 2.6<br>G = 2.8<br>$D_{Br}$ = 1.1 | A H = 3.2<br>K = 3.4<br>D = 1.8 | 1.0 mm² = 1.36<br>0.75 mm² = 1.27<br>0.5 mm² = 1.18 | E = 2.2<br>G = 2.8<br>$D_{Br}$ = 1.1 | H = 2.8<br>K = 3.0<br>R = 1.6 | MQC APPLICATOR<br>2-878550-2 | 734417-1 | 3.0 | 4.6 | 7.0 | 26.7 | | |
| | 2-962841-2 | F | - | 1 | | 1 | | | | | | | | | | | | | | | |
| | 2-962841-1 | F | 2-962841-1 | 1 | | 4 | | | | | | | | | | | | | | | |
| | 1-962841-3 | F | 1-963745-3 | 1 | CuSn4 | 2 | | | | | | | | | | | | | | | |
| | 1-962841-2 | F | 1-963745-2 | 1 | | 1 | | | | | | | | | | | | | | | |
| | 1-962841-1 | F | 1-963745-1 | 1 | | 4 | | | | | | | | | | | | | | | |
| | 2-963860-3 | B | - | 2 | CuFe | 2 | 0.2 - 0.5 FLR | 1.3 - 1.6 | E = 2.1<br>G = 2.1<br>$D_{Br}$ = 0.8 | A H = 2.9<br>K = 2.9<br>D = 1.4 | 0.5 mm² = 1.12<br>0.35 mm² = 1.05<br>0.2 mm² = 0.98 | E = 1.7<br>G = 2.1<br>$D_{Br}$ = 0.8 | H = 2.5<br>K = 2.5<br>R = 1.4 | MQC APPLICATOR<br>2-878549-2 | 734538-1 | 2.5 | 3.7 | 5.8 | 25.5 | | |
| | 2-963860-2 | B | 2-963861-2 | 2 | | 1 | | | | | | | | | | | | | | | |
| | 2-963860-1 | B | 2-963861-1 | 2 | | 4 | | | | | | | | | | | | | | | |
| | 1-963860-3 | B | 1-963861-3 | 2 | CuSn4 | 2 | | | | | | | | | | | | | | | |
| | 1-963860-2 | B | 1-963861-2 | 2 | | 1 | | | | | | | | | | | | | | | |
| | 1-963860-1 | B | 1-963861-1 | 2 | | 4 | | | | | | | | | | | | | | | |

| | | | |
|---|---|---|---|
| CRIMP DIMENSION mm<br>Crimpabmessungen mm | | EXTRACTION TOOL<br>Ausdrueckwerkzeug<br>No. 968107-1 | |

THIS DRAWING IS A CONTROLLED DOCUMENT.

DIMENSIONS: mm

TOLERANCES UNLESS OTHERWISE SPECIFIED: 0 PLC ±0.2; 1 PLC ±; 2 PLC ±; 3 PLC ±; 4 PLC ±; ANGLES ±0.5°

MATERIAL - FINISH -

DWN 4JUN1999 M. Gerlach; CHK M. Bleicher; APVD -

PRODUCT SPEC 108-18063; APPLICATION SPEC 114-18051; WEIGHT -

TE Connectivity

NAME PRODUCT GROUP DRAWING FOR TAB 2.8x0.8
Produktgruppenzeichnung fuer
Flachstecker 2.8x0.8

SIZE A0 | CAGE CODE 00779 | DRAWING NO C-1355052 | RESTRICTED TO -

Customer Drawing | SCALE 10:1 | SHEET 1 OF 1 | REV A16

Компания «ЭлектроПласт» предлагает заключение долгосрочных отношений при поставках импортных электронных компонентов на взаимовыгодных условиях!

Наши преимущества:

- Оперативные поставки широкого спектра электронных компонентов отечественного и импортного производства напрямую от производителей и с крупнейших мировых складов;
- Поставка более 17-ти миллионов наименований электронных компонентов;
- Поставка сложных, дефицитных, либо снятых с производства позиций;
- Оперативные сроки поставки под заказ (от 5 рабочих дней);
- Экспресс доставка в любую точку России;
- Техническая поддержка проекта, помощь в подборе аналогов, поставка прототипов;
- Система менеджмента качества сертифицирована по Международному стандарту ISO 9001;
- Лицензия ФСБ на осуществление работ с использованием сведений, составляющих государственную тайну;
- Поставка специализированных компонентов (Xilinx, Altera, Analog Devices, Intersil, Interpoint, Microsemi, Aeroflex, Peregrine, Syfer, Eurofarad, Texas Instrument, Miteq, Cobham, E2V, MA-COM, Hittite, Mini-Circuits,General Dynamics и др.);

Помимо этого, одним из направлений компании «ЭлектроПласт» является направление «Источники питания». Мы предлагаем Вам помощь Конструкторского отдела:

- Подбор оптимального решения, техническое обоснование при выборе компонента;
- Подбор аналогов;
- Консультации по применению компонента;
- Поставка образцов и прототипов;
- Техническая поддержка проекта;
- Защита от снятия компонента с производства.

**Как с нами связаться**

**Телефон:** 8 (812) 309 58 32 (многоканальный)
**Факс:** 8 (812) 320-02-42
**Электронная почта:** org@eplast1.ru
**Адрес:** 198099, г. Санкт-Петербург, ул. Калинина, дом 2, корпус 4, литера А.