AEDR-8000 Series

Reflective Surface Mount Optical Encoder

Data Sheet

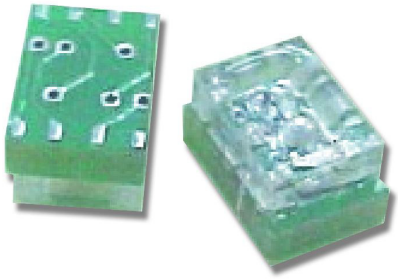

Description

By introducing an additional PCB top-up thickness attached to the encoder, the AEDR-8000 Encoder series could easily solve the height issue in various applications. Furthermore, this great feature is enhanced with the offering of different height profile options.

Direct Replacement of HEDR-8000 Encoder series is now possible with the AEDR-8000 Encoder series. Such migration is always simple and easy due to the perfect matching of the height profiles as well as same footprints in both encoder series.

The AEDR-8000 Encoder series employs reflective technology for rotary and linear movement control. The encoder houses an LED light source and a photo-detecting circuitry in a single package.

In adding on to the main features, The AEDR-8000 Encoder series offers two-channel quadrature digital outputs (TTL compatible) where signal could be interfaced directly with most of the signal processing circuitries. Thus, it's bound to reduce the design time of an application.

Applications

The AEDR-8000 Encoder series provides motion sensing at a competitive price, making it ideal for high volume applications. Its small size and surface mount package make it ideal for printers, copiers, card readers and many consumer products, particularly where space and weight are design constraints.

Features

- Reflective technology
- Surface mount small outline leadless package
- Direct replacement of HEDR-8000 encoder
- Single channel incremental output
- Two channels quadrature outputs for direction sensing
- Single 5 V supply, TTL compatible output
- -20°C to 85°C absolute operating temperature
- Lead-free package
- Encoding resolution options:

  75, 150 and 180 (lines/inch) or 2.95, 5.91, 7.09 (lines/mm)
- PCB height profile options:

  1.0 mm PCB thickness 1.5 mm PCB thickness

Note: All specifications are subject to change without prior notification.

Theory of Operation

The AEDR 8000 Encoder series combines an emitter and a detector in a single surface mount leadless package. When used with a codewheel or linear codestrip, the encoder translates rotary or linear motion into digital outputs. As seen in the block diagram, the AEDR-8000 Encoder series consists of three major components: a light emitting diode (LED) light source, a detector IC consisting photodiodes, and lens to focus light beam from the emitter as well as light falling on the detector.

The operation of the encoder is based on the principle of optics where the detector photodiodes sense the absence and presence of light. In this case, the rotary/linear motion of an object being monitored is converted to equivalent light pattern via the use of codewheel/codestrip. As shown in the above diagram, the reflective area (window) of the codewheel (or codestrip) reflects light back to the photodetector IC, whereas no light is reflected by the non-reflective area (bar). An alternating light and dark pattern, corresponding to the window and bar, falls on the photodiodes as the codewheel rotates. The moving light pattern is exploited by the detector circuitry to produce digital outputs representing the rotation of the codewheel. When the codewheel is coupled to a motor, the encoder outputs are then a direct representation of the motor rotation. The same concept applies to the use of a codestrip to detect linear motion.

Definitions

State Width (S): The number of electrical degrees between a transition in Channel A and the neighboring transition in Channel B. There are 4 states per cycle, each nominally 90°e.

State Width Error (ΔS): The deviation of state width, in electrical degrees, from its ideal value of 90°e.

Phase (ϕ): The number of electrical degrees between the center of high state of Channel A and the center of high state of Channel B. Nominally 90°e.

Phase Error ($\Delta\phi$): The deviation of phase, in electrical degrees, from its ideal value of 90°e.

Pulse Width (P): The duration of high state of the output, in electrical degrees, within one cycle. Nominally 180°e or half a cycle.

Pulse Width Error (ΔP): The deviation of pulse width, in electrical degrees, from its ideal value of 180°e.

Count (N): The number of window and bar pairs per revolution (CPR) of codewheel. For linear codestrip, defined as the number of window and bar pairs per unit length (lines per inch [LPI] or lines per mm [LPmm]).

One Cycle (C): 360 electrical degrees (°e). Equivalent to one window and bar pair.

One Shaft Rotation: 360 mechanical degrees. Also equivalent to N counts (codewheel only).

Line Density: The number of window and bar pairs per unit length, expressed in either lines per inch (LPI) or lines per mm (LPmm).

Optical Radius (Rop): The distance between the codewheel center and the centerline between the two domes of the encoder.

Gap (G): The distance from the surface of the encoder to the surface of codewheel or codestrip.

Specular Reflectance (R_f): The amount of incident light reflected by a surface. Quantified in terms of the percentage of incident light. A spectrometer can be used to measure specular reflectance of a surface (contact factory for more information).

Radial and Tangential Misalignment Error (E_R, E_T): For rotary motion, mechanical displacement in the radial and tangential directions relative to the nominal alignment.

Angular Misalignment Error (E_A): Angular displacement of the encoder relative to the tangential line.

Block Diagram of AEDR-8000 Encoder

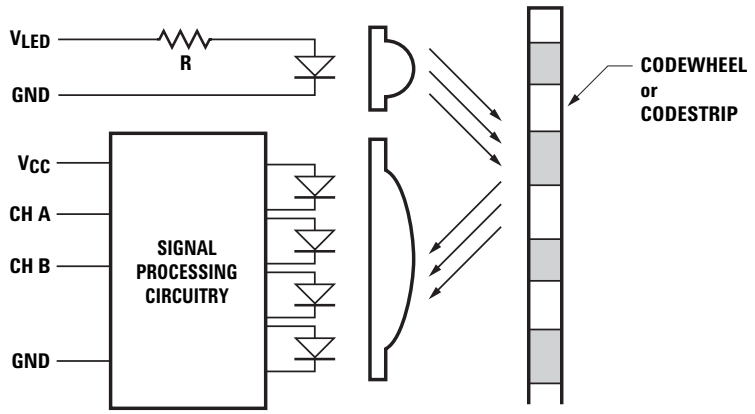

Output Waveform

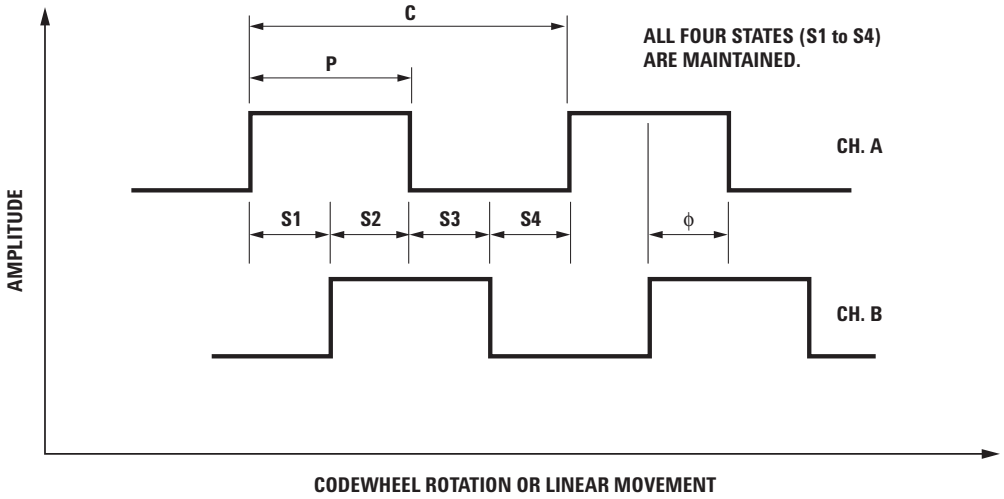

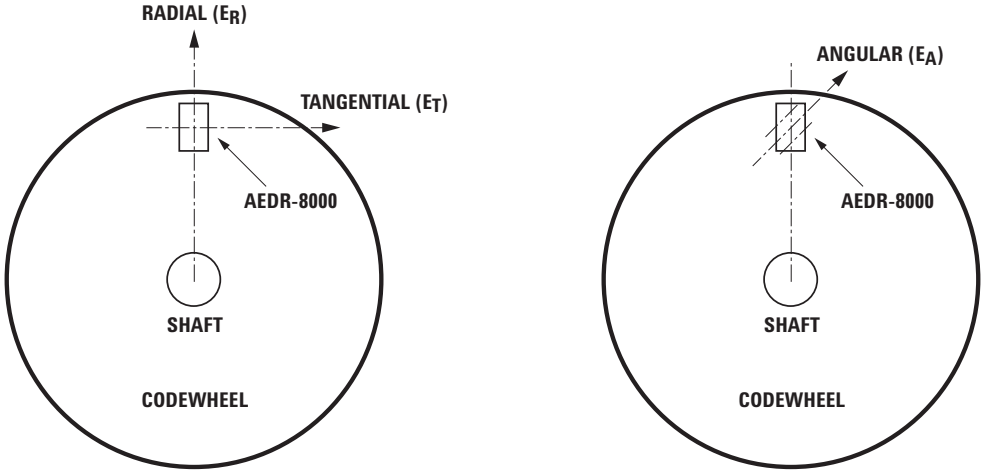

Absolute Maximum Ratings

Storage Temperature, T_S	-40°C to 85°C
Operating Temperature, T_A	-20°C to 85°C
Supply Voltage, V_{CC}	-0.5 V to 7 V
Output Voltage, V_O	-0.5 V to V_{CC}
Output Current per Channel, I_{OUT}	-1.0 mA to 8 mA
ESD	Human Body Model JESD22-A114-A Class 2
	Machine Model JESD22-A115-A Class B

Notes:
1. Exposure to extreme light intensity (such as from flashbulbs or spotlights) may cause permanent damage to the device.
2. CAUTION: It is advised that normal static precautions should be taken when handling the encoder in order to avoid damage and/or degradation induced by ESD.
3. Proper operation of the encoder cannot be guaranteed if the maximum ratings are exceeded.

Recommended Operating Conditions

Parameter	Sym.	Min.	Typ.	Max.	Units	Notes
Temperature	T_A	0	25	85	°C	
Supply Voltage	V_{CC}	4.5	5.0	5.5	V	Ripple < 100 mVp-p
LED Current	I_{LED}	13	15	18	mA	See note 1
Load Capacitance	C_L			100	pF	2.7 kΩ Pull-Up
Count Frequency	f			30	kHz	See note 2
Radial Misalignment	E_R			±0.38 (±0.015)	mm (in.)	
Tangential Misalignment	E_T			± 0.38 (± 0.015)	mm (in.)	
Angular Misalignment	E_A		0	± 1.5	deg.	
Codewheel/Strip Tilt	C_T		0	1	deg.	
Codewheel/Strip Gap	G	1.0 (0.04)	2.0 (0.08)	2.5 (0.10)	mm (in.)	

Note:
1. Refer to "LED Current Limiting Resistor" on page 5.
2. Count frequency = velocity (RPM) x N/60.

Encoding Characteristics

Encoding characteristics over the recommended operating condition and mounting conditions.

Parameter	Symbol	Typical	Maximum	Unit	Notes
Pulse Width Error	ΔP	15	55	°e	AEDR-8010-K
Pulse Width Error (Ch. A, Ch. B)	ΔP	15, 25	55, 75	°e	AEDR-8000-K
		16	75		AEDR-8100-P
		16	75		AEDR-8100-Q
Phase Error	Δϕ	12	60	°e	AEDR-8000-K
		10	60		AEDR-8100-P
		10	60		AEDR-8100-Q

Note: Typical values represent the encoder performance at typical mounting alignment, whereas the maximum values represent the encoder performance across the range of recommended mounting tolerance.

Electrical Characteristics

Characteristics over recommended operating conditions at 25°C.

Parameter	Symbol	Min.	Typ.	Max.	Unit	Notes
Detector Supply Current	I_{cc}		2.2	5.0	mA	
High Level Output Voltage	V_{OH}	2.4			V	I_{OH} = -0.2 mA
Low Level Output Voltage	V_{OL}			0.4	V	I_{OL} = 8.0 mA
Rise Time	t_r		500		ns	C_L = 25 pF
Fall Time	t_f		100		ns	R_L = 2.7 kΩ

Recommended Codewheel and Codestrip Characteristics

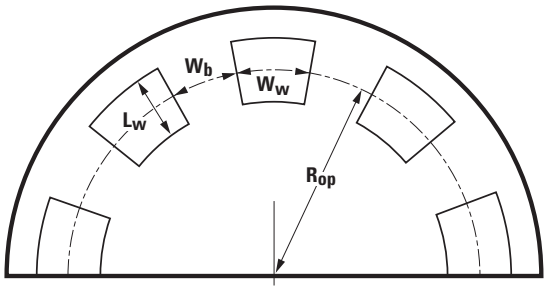

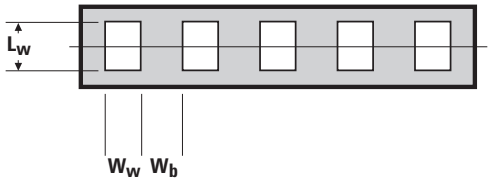

Parameter	Symbol	Min.	Max.	Unit	Notes
Window/Bar Ratio	Ww/Wb	0.9	1.1		
Window/Bar Length	L_W	1.80 (0.071)	2.31 (0.091)	mm (inches)	
Specular Reflectance	R_f	60	85		Reflective area. See note 1.
		–	10		Nonreflective area
		2.95 (75)		AEDR-80X0-K	
		5.91 (150)			AEDR-8100-P
		7.09 (180)			AEDR-8100-Q
Optical Radius	Rop	11	–	mm	Recommended value

Notes:
1. Measurements from TMA µScan meter. Contact factory for more information.
2. Contact factory for more information on compatibility of codewheel/strip.

LED Current Limiting Resistor

A resistor to limit current to the LED is required. The recommended value is 220 Ω (±10 %) and the resistor should be placed in series between the 5 V supply and pin 3 of the device (V_{led}). This will result in an LED current of approximately 15 mA.

Moisture Sensitive Level

The AEDR-8000 series is specified to moisture sensitive level (MSL) 3.

Package Outline Drawing

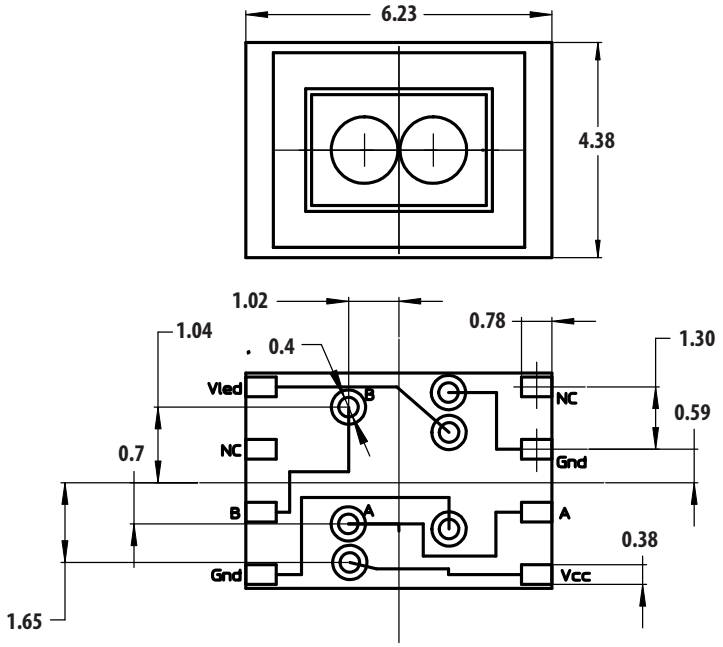

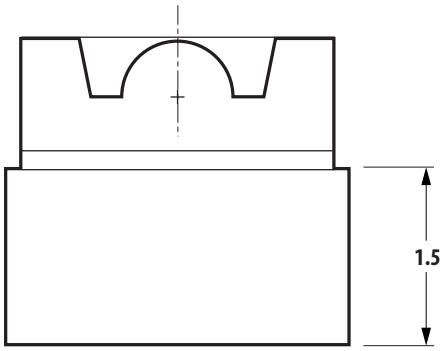

SIDE VIEW (LOW RESOLUTION)

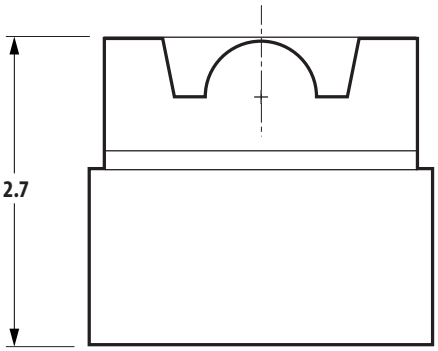

SIDE VIEW (HIGH RESOLUTION)

Encoder Orientation

The AEDR-8000 series is designed such that both the LED and detector IC should be placed parallel to the window/bar orientation, as shown. As such, the encoder is tolerant against radial play of ± 0.38 mm. The emitter side should be placed closer to the rotating shaft.

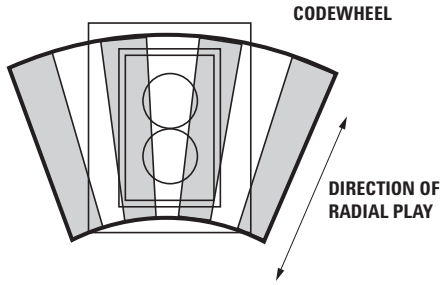

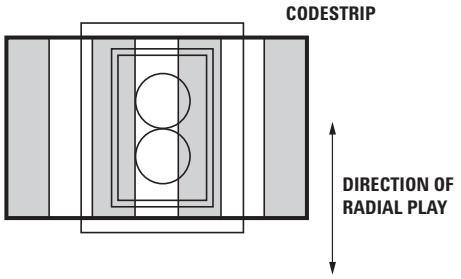

Mounting Consideration

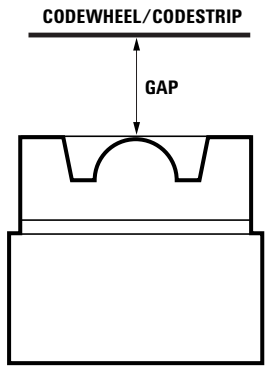

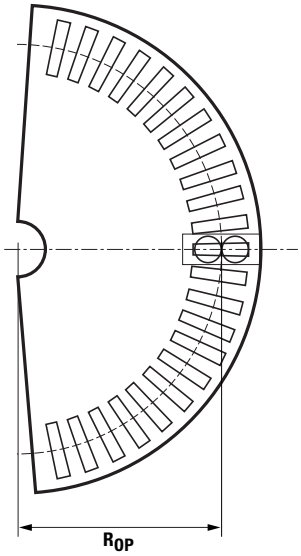

11.00 mm (0.433 IN) < R_{OP} <

Direction of Codewheel Rotation

With the emitter side of the encoder placed closer to the codewheel centre, Channel A leads Channel B when the codewheel rotates anti-clockwise and vice versa.

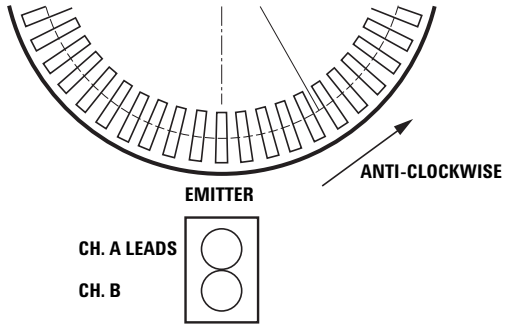

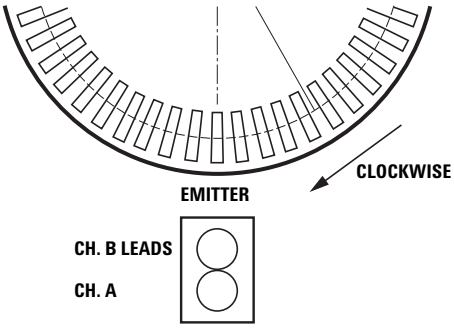

Viewed from Top

Recommended Lead-Free Reflow Soldering Temperature Profile

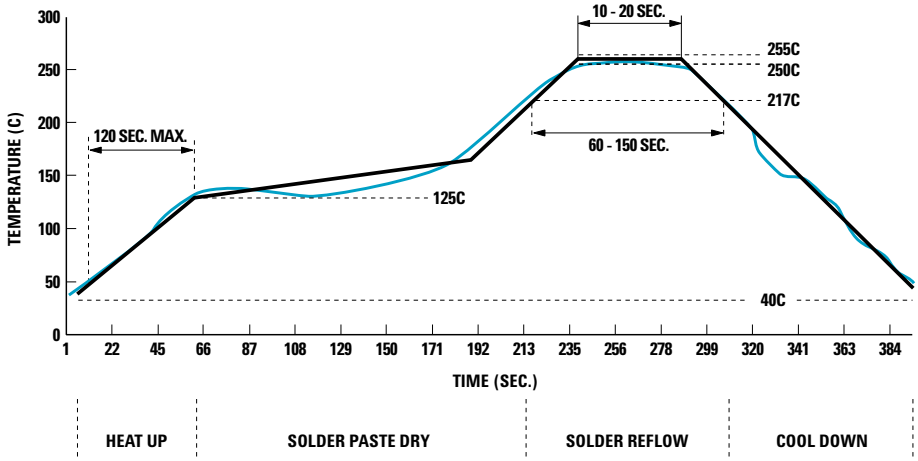

Preheat Temperature 40°C to 125°C	= 120 sec. max.
Temperature Maintain Above 217°C	= 60 – 150 sec.
Peak Temperature	= 255 ± 5°C
Time Above 250°C	= 10 – 20 sec.

Note: Due to treatment of high temperature, AEDR-8000 transparent compound is expected to turn yellow after IR reflow.

Resolution Indicator

Since the encoder is too small to imprint resolution marking on its package, color-coding the package is employed to differentiate resolutions. The details are:

LPI	75	150	180
Color	Clear	Red	Amber

Ordering Information

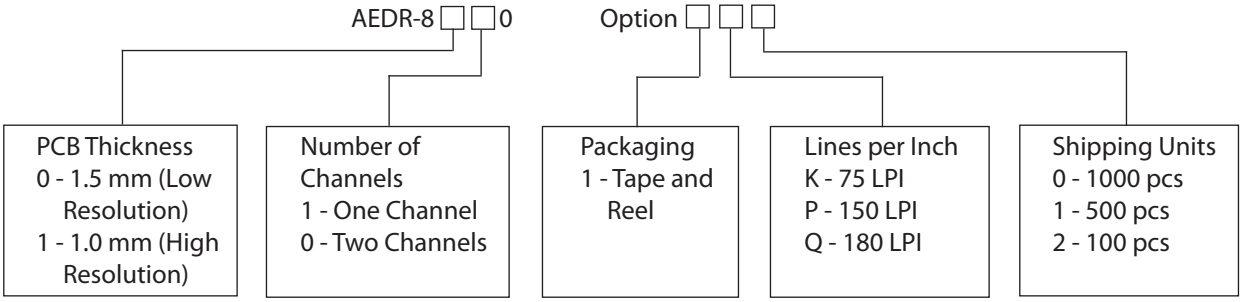

Note: Encoders are packed in tape of quantity 1000 pcs or 500 pcs or 100 pcs.

Available Options

	Resolution			Shipping Units		
Encoder	K – 75 LPI	P – 150 LPI	Q – 180 LPI	0 – 1000 pcs	1 – 500 pcs	2 – 100 pcs
AEDR-8000	*			*	*	*
AEDR-8010	*					*
AEDR-8100		*		*	*	*
AEDR-8100			*	*	*	

For product information and a complete list of distributors, please go to our website: **www.avagotech.com**

Avago, Avago Technologies, and the A logo are trademarks of Avago Technologies in the United States and other countries.
Data subject to change. Copyright © 2005-2009 Avago Technologies. All rights reserved. Obsoletes 5989-3067EN
AV02-0971EN - August 27, 2009

Компания «ЭлектроПласт» предлагает заключение долгосрочных отношений при поставках импортных электронных компонентов на взаимовыгодных условиях!

Наши преимущества:

- Оперативные поставки широкого спектра электронных компонентов отечественного и импортного производства напрямую от производителей и с крупнейших мировых складов;
- Поставка более 17-ти миллионов наименований электронных компонентов;
- Поставка сложных, дефицитных, либо снятых с производства позиций;
- Оперативные сроки поставки под заказ (от 5 рабочих дней);
- Экспресс доставка в любую точку России;
- Техническая поддержка проекта, помощь в подборе аналогов, поставка прототипов;
- Система менеджмента качества сертифицирована по Международному стандарту ISO 9001;
- Лицензия ФСБ на осуществление работ с использованием сведений, составляющих государственную тайну;
- Поставка специализированных компонентов (Xilinx, Altera, Analog Devices, Intersil, Interpoint, Microsemi, Aeroflex, Peregrine, Syfer, Eurofarad, Texas Instrument, Miteq, Cobham, E2V, MA-COM, Hittite, Mini-Circuits,General Dynamics и др.);

Помимо этого, одним из направлений компании «ЭлектроПласт» является направление «Источники питания». Мы предлагаем Вам помощь Конструкторского отдела:

- Подбор оптимального решения, техническое обоснование при выборе компонента;
- Подбор аналогов;
- Консультации по применению компонента;
- Поставка образцов и прототипов;
- Техническая поддержка проекта;
- Защита от снятия компонента с производства.

Как с нами связаться

Телефон: 8 (812) 309 58 32 (многоканальный)
Факс: 8 (812) 320-02-42
Электронная почта: org@eplast1.ru
Адрес: 198099, г. Санкт-Петербург, ул. Калинина, дом 2, корпус 4, литера А.