19-0879; Rev 0; 7/07

+5.0V, ±15kV ESD-Protected, Half-Duplex/ Full-Duplex, RS-485 Transceiver in µDFN

General Description

The MAX13181E–MAX13184E are full-duplex and selectable half-/full-duplex RS-485 transceivers in a tiny 2mm x 2mm µDFN package. These devices are designed for space-constrained applications by including extended ESD protection to ±15kV per Human Body Model (HBM) and integrating pullup/pulldown resistors on the DE, $\overline{RE}$ and H/$\overline{F}$ inputs to reduce external components. The MAX13182E/MAX13184E feature a low-current shutdown mode for power-sensitive applications.

These devices have a 1/8 unit-load input receiver that allows up to 256 transceivers on the bus. The MAX13181E/MAX13182E feature reduced slew-rate drivers to minimize EMI and reflections that are caused by improperly terminated cables. The slew-rate limited MAX13181E/MAX13182E allow error-free data transmission up to 250kbps. The MAX13183E/MAX13184E feature full-speed drivers, allowing data rates of up to 16Mbps. The MAX13182E/MAX13184E are configured for full-duplex operation, while the MAX13181E/MAX13183E feature pin-selectable half- or full-duplex operation. All driver outputs and receiver inputs include extended ESD protection.

The MAX13181E–MAX13184E are available in a tiny 10-pin, 2mm x 2mm µDFN. The MAX13183E/MAX13184E are also available in industry-standard 14-pin SO packages. The devices operate over the extended -40°C to +85°C temperature range.

Applications

Industrial Control
Motor Drive Control
Telecom
Security System
Instrumentation

Features

- **Available in Tiny, 10-Pin, 2mm x 2mm, µDFN and 14-Pin SO Packages**
- **+5.0V Operation**
- **Extended ESD Protection**
  ±15kV Human Body Model
  ±12kV IEC 61000-4-2 Air-Gap Disharge
  ±6kV IEC 61000-4-2 Contact Disharge
- **Slew-Rate Limiting Facilitates Error-Free Data Transmission (MAX13181E/MAX13182E)**
- **2.5µA (typ) Low-Current Shutdown Mode**
- **1/8-Unit Load Allows Up to 256 Transceivers on the Bus**

Pin Configurations

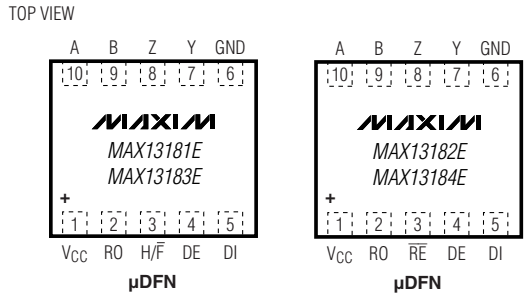

Pin Configurations continued at end of data sheet.

Selector Guide

PART	HALF/FULL DUPLEX	MAXIMUM DATA RATE	SLEW-RATE LIMITED	LOW-POWER SHUTDOWN	RECEIVER ENABLE
MAX13181E	Selectable	250 kbps	Yes	No	No
MAX13182E	Full	250 kbps	Yes	Yes	Yes
MAX13183E	Selectable	16 Mbps	No	No	No
MAX13184E	Full	16 Mbps	No	Yes	Yes

Ordering Information

PART	TEMP RANGE	PIN-PACKAGE	TOP MARK	PKG CODE
MAX13181EELB+	-40°C to +85°C	10 µDFN	ABC	L1022-1
MAX13182EELB+	-40°C to +85°C	10 µDFN	ABD	L1022-1
MAX13182EESD+	-40°C to +85°C	14 SO	—	S14-1

+Denotes a lead-free package.

Ordering Information continued at end of data sheet.

For pricing delivery, and ordering information please contact Maxim Direct at 1-888-629-4642, or visit Maxim's website at www.maxim-ic.com.

+5.0V, ±15kV ESD-Protected, Half-Duplex/ Full-Duplex, RS-485 Transceiver in µDFN

ABSOLUTE MAXIMUM RATINGS

(All voltages referenced to GND.)
Supply Voltage (V_{CC}) .....-0.3V to +6V
Control Voltage ($\overline{RE}$, DE, DI, H/$\overline{F}$).....-0.3V to +6V
Driver Output Voltage (A, B, Y, Z) .....-8V to +12.5V
Receiver Input Voltage (A, B).....-8V to +12.5V
Receiver Input Voltage Full-Duplex (A, B).....-8V to +12.5V
Receiver Output Voltage (RO)..... -0.3V to (V_{CC} + 0.3V)
Short-Circuit Duration (A, B, Y, Z) to GND .....Continuous

Continuous Power Dissipation (T_A = +70°C)
10-Pin µDFN (derate 5mW/°C above +70°C) 403mW
14-Pin SO (derate 8.3mW/°C above +70°C).....667mW
Operating Temperature Range .....-40°C to +85°C
Storage Temperature Range .....-65°C to +150°C
Junction Temperature.....+150°C
Lead Temperature (soldering, 10s) .....+300°C

Stresses beyond those listed under "Absolute Maximum Ratings" may cause permanent damage to the device. These are stress ratings only, and functional operation of the device at these or any other conditions beyond those indicated in the operational sections of the specifications is not implied. Exposure to absolute maximum rating conditions for extended periods may affect device reliability.

DC ELECTRICAL CHARACTERISTICS

(V_{CC} = +5V ±10%, T_A =T_{MIN} to T_{MAX}, unless otherwise noted. Typical values are at V_{CC} = +5V and T_A = +25°C.) (Note 1)

PARAMETER	SYMBOL	CONDITIONS		MIN	TYP	MAX	UNITS
DRIVER							
Differential Driver Output	V_{OD}	R_L = 100Ω (RS422), Figure 1		2		V_{CC}	V
		R_L = 54Ω (RS485), Figure 1		1.5		V_{CC}	V
		No load				V_{CC}	
Change in Magnitude of Differential Output Voltage	ΔV_{OD}	R_L = 100Ω or 54Ω, Figure 1, (Note 2)				0.2	V
Driver Common-Mode Output Voltage	V_{OC}	R_L = 100Ω or 54Ω, Figure 1			V_{CC} / 2	3	V
Change in Magnitude of Common-Mode Voltage	ΔV_{OC}	R_L = 100Ω or 54Ω, Figure 1, (Note 2)				0.2	V
Input-High Voltage	V_{IH}	DE, DI, $\overline{RE}$, H/$\overline{F}$		2			V
Input-Low Voltage	V_{IL}	DE, DI, $\overline{RE}$, H/$\overline{F}$				0.8	V
Input Hysteresis	V_{HYS}	DE, DI, $\overline{RE}$, H/$\overline{F}$			100		mV
Internal Pullup Resistance	R_{IN_UP}	Internal pullup $\overline{RE}$		125		400	kΩ
Internal Pulldown Resistance	R_{IN_DWN}	Internal pulldown DE, H/$\overline{F}$		125		400	kΩ
Output Leakage (Y and Z) Full-Duplex	I_O	DE = GND, V_{CC} = GND or 5.5V	V_{IN} = +12V			125	µA
			V_{IN} = -7V	-100			
Driver Short-Circuit Output Current Threshold (Note 3)	I_{OSD}	0 ≤ V_{OUT} ≤ 12V		40		250	mA
		-7 ≤ V_{OUT} ≤ V_{CC}		-250		-40	
Driver Short-Circuit Foldback Output Current (Note 3)	I_{OSDF}	(V_{CC} - 1V) ≤ V_{OUT} ≤ 12V		20			mA
		-7V ≤ V_{OUT} ≤ 1V				-20	
Thermal-Shutdown Threshold	T_{TS}	0 ≤ V_{OUT} ≤ 12V			140		°C
Thermal-Shutdown Hysteresis	T_{TSH}				15		°C
Input Current (A and B)	$I_{A, B}$	DE = GND, V_{CC} = GND or 5.5V	V_{IN} = +12V			125	µA
			V_{IN} = -7V	-100			

DC ELECTRICAL CHARACTERISTICS (continued)

(V_{CC} = +5V ±10%, T_A =T_{MIN} to T_{MAX}, unless otherwise noted. Typical values are at V_{CC} = +5V and T_A = +25°C.) (Note 1)

PARAMETER	SYMBOL	CONDITIONS	MIN	TYP	MAX	UNITS
RECEIVER						
Receiver Differential Threshold Voltage	V_{TH}	-7V ≤ V_{CM} ≤ +12V, Figure 2	-200	0	+200	mV
Receiver Input Hysteresis	V_{TH}	V_A + V_B = 0, Figure 2		25		mV
RO Output-High Voltage	V_{OH}	I_O = -1mA, Figure 2	V_{CC} - 0.6			V
RO Output-Low Voltage	V_{OL}	I_O = 1mA, Figure 2			0.4	V
Tri-State Output Current at Receiver	I_{OZR}	0 ≤ V_O ≤ V_{CC}, Figure 2	-1		+1	µA
Receiver-Input Resistance	R_{IN}	-7V ≤ V_{CM} ≤ +12V, Figure 2	96			kΩ
Receiver-Output Short-Circuit Current	I_{OSR}	0 ≤ V_{RO} ≤ V_{CC}, Figure 2	-80		+80	mA
SUPPLY CURRENT						
Supply Current	I_{CC}	No load, $\overline{RE}$ = 0, DE = V_{CC}		2	3	mA
		No load, $\overline{RE}$ = V_{CC}, DE = V_{CC}		2	3	
		No load, $\overline{RE}$ = 0V, DE = 0 or leave unconnected		2	3	
Shutdown Current (MAX13182E/MAX13184E Only)	I_{SHDN}	$\overline{RE}$ = V_{CC} or leave unconnected, DE = GND or leave unconnected		2.5	10	µA
ESD PROTECTION						
ESD Protection for Y, Z, A and B		Human Body Model		±15		kV
		IEC 61000-4-2 Contact Discharge		±6		
		IEC 61000-4-2 Air-Gap Discharge		±12		

DRIVER SWITCHING CHARACTERISTICS—MAX13181E/MAX13182E (SLEW-RATE LIMITED TO 250kbps)

(V_{CC} = +5V ±10%, T_A =T_{MIN} to T_{MAX}, unless otherwise noted. Typical values are at V_{CC} = +5V and T_A = +25°C.) (Note 1)

PARAMETER	SYMBOL	CONDITIONS	MIN	TYP	MAX	UNITS
Driver Propagation Delay	t_{DPLH}	C_L = 50pF, R_L = 54Ω, Figure 3	200		1000	ns
	t_{DPHL}	C_L = 50pF, R_L = 54Ω, Figure 3	200		1000	
Driver Differential Output Rise or Fall Time	t_{DR}, t_{DF}	C_L = 50pF, R_L = 54Ω, Figure 3	400		1200	ns
Differential Driver Output Skew (t_{DPLH} - t_{DPHL})	t_{DSKEW}	C_L = 50pF, R_L = 54Ω, Figure 3			140	ns
Maximum Data Rate			250			kbps
Driver Enable to Output High	t_{DZH}	Figure 4a			2500	ns
Driver Enable to Output Low	t_{DZL}	Figure 4b			2500	ns
Driver Disable Time from Low	t_{DLZ}	Figure 4b			100	ns
Driver Disable Time from High	t_{DHZ}	Figure 4a			100	ns
Driver Enable from Shutdown to Output High	$t_{DZH(SHDN)}$	(MAX13182E) Figure 4a			5500	ns
Driver Enable from Shutdown to Output Low	$t_{DZL(SHDN)}$	(MAX13182E) Figure 4b			5500	ns
Time to Shutdown	t_{SHDN}	(MAX13182E)	50	200	600	ns

+5.0V, ±15kV ESD-Protected, Half-Duplex/ Full-Duplex, RS-485 Transceiver in µDFN

DRIVER SWITCHING CHARACTERISTICS—MAX13183E/MAX13184E (MAXIMUM DATA RATE OF 16Mbps)

(V_{CC} = +5V ±10%, T_A =T_{MIN} to T_{MAX}, unless otherwise noted. Typical values are at V_{CC} = +5V and T_A = +25°C.) (Note 1)

PARAMETER	SYMBOL	CONDITIONS	MIN	TYP	MAX	UNITS
Driver Propagation Delay	t_{DPLH}	C_L = 50pF, R_L = 54Ω, Figure 3			25	ns
	t_{DPHL}	C_L = 50pF, R_L = 54Ω, Figure 3			25	
Driver Differential Output Rise or Fall Time	t_{DR}, t_{DF}	C_L = 50pF, R_L = 54Ω, Figure 3			15	ns
Differential Driver Output Skew (t_{DPLH} - t_{DPHL})	t_{DSKEW}	C_L = 50pF, R_L = 54Ω, Figure 3			8	ns
Maximum Data Rate			16			Mbps
Driver Enable to Output-High	t_{DZH}	Figures 1 and 4a			50	ns
Driver Enable to Output-Low	t_{DZL}	Figures 1 and 4b			50	ns
Driver Disable Time from Low	t_{DLZ}	Figures 1 and 4b			50	ns
Driver Disable Time from High	t_{DHZ}	Figures 1 and 4a			50	ns
Driver Enable from Shutdown to Output High	$t_{DZH\ (SHDN)}$	Figures 1 and 4a (MAX13184E)			2200	ns
Driver Enable from Shutdown to Output Low	$t_{DZL\ (SHDN)}$	Figures 1 and 4b (MAX13184E)			2200	ns
Time to Shutdown	t_{SHDN}	(MAX13184E)	50	200	600	ns

RECEIVER SWITCHING CHARACTERISTICS

(V_{CC} = +5V ±10%, T_A =T_{MIN} to T_{MAX}, unless otherwise noted. Typical values are at V_{CC} = +5V and T_A = +25°C.) (Note 1)

PARAMETER	SYMBOL	CONDITIONS	MIN	TYP	MAX	UNITS
Receiver Propagation Delay	t_{RPLH}	C_L = 15pF, Figure 5		40	75	ns
	t_{RPHL}			40	75	
Receiver Output Skew (t_{RPLH} - t_{RPHL})	t_{RSKEW}	C_L = 15pF, Figure 5			8	ns
Maximum Data Rate			16			Mbps
Receiver Enable to Output Low	t_{RZL}	(MAX13182E/MAX13184E) Figures 2 and 6			50	ns
Receiver Enable to Output High	t_{RZH}	(MAX13182E/MAX13184E) Figures 2 and 6			50	ns
Receiver Disable Time from Low	t_{RLZ}	(MAX13182E/MAX13184E) Figures 2 and 6			50	ns
Receiver Disable Time from High	t_{RHZ}	(MAX13182E/MAX13184E) Figures 2 and 6			50	ns
Receiver Enable from Shutdown to Output High	$t_{RZH\ (SHDN)}$	(MAX13182E/MAX13184E) Figures 2 and 6			2200	ns
Receiver Enable from Shutdown to Output Low	$t_{RZL\ (SHDN)}$	(MAX13182E/MAX13184E) Figures 2 and 6			2200	ns

Note 1: All currents into the device are positive. All currents out of the device are negative. All voltages are referred to device ground, unless otherwise noted. µDFN devices are production tested at +25°C. Overtemperature limits are guaranteed by design.

Note 2: ΔV_{OD} and ΔV_{OC} are the changes in V_{OD} and V_{OC}, respectively, when the DI input changes state.

Note 3: The short-circuit output current applies to peak current just prior to foldback current limiting. The short-circuit foldback output current applies during current limiting to allow a recovery from bus contention.

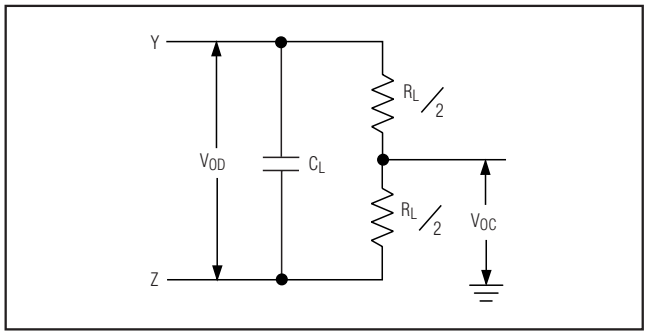

Figure 1. Driver Differential Output

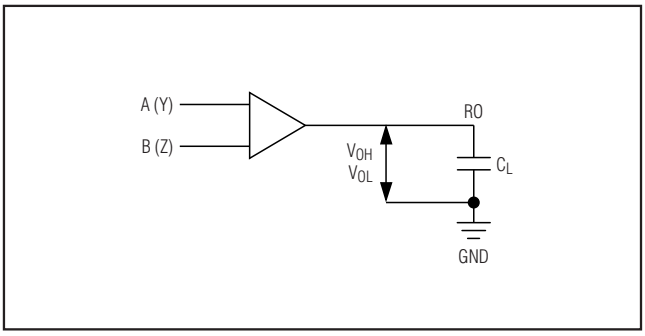

Figure 2. Receiver Differential Input

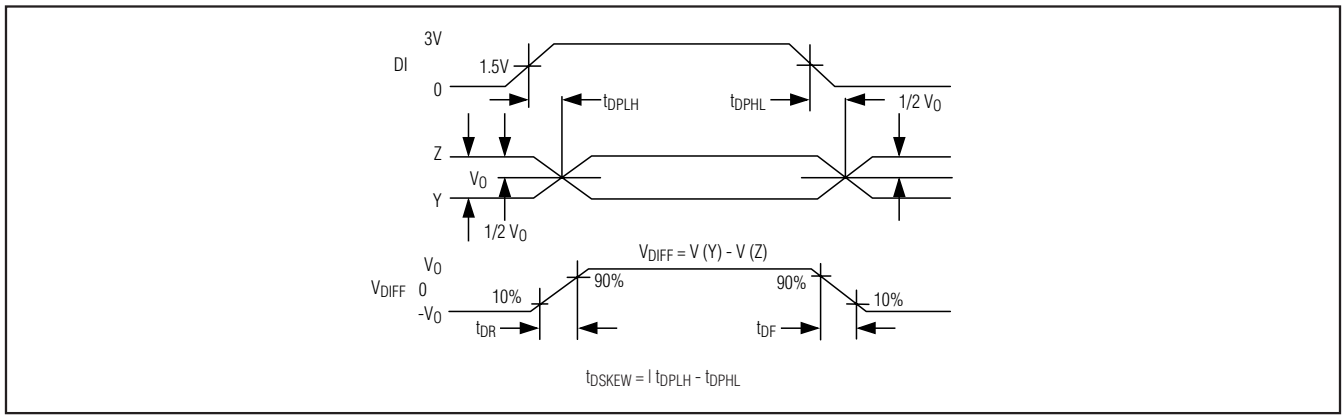

Figure 3. Driver Propagation Delay

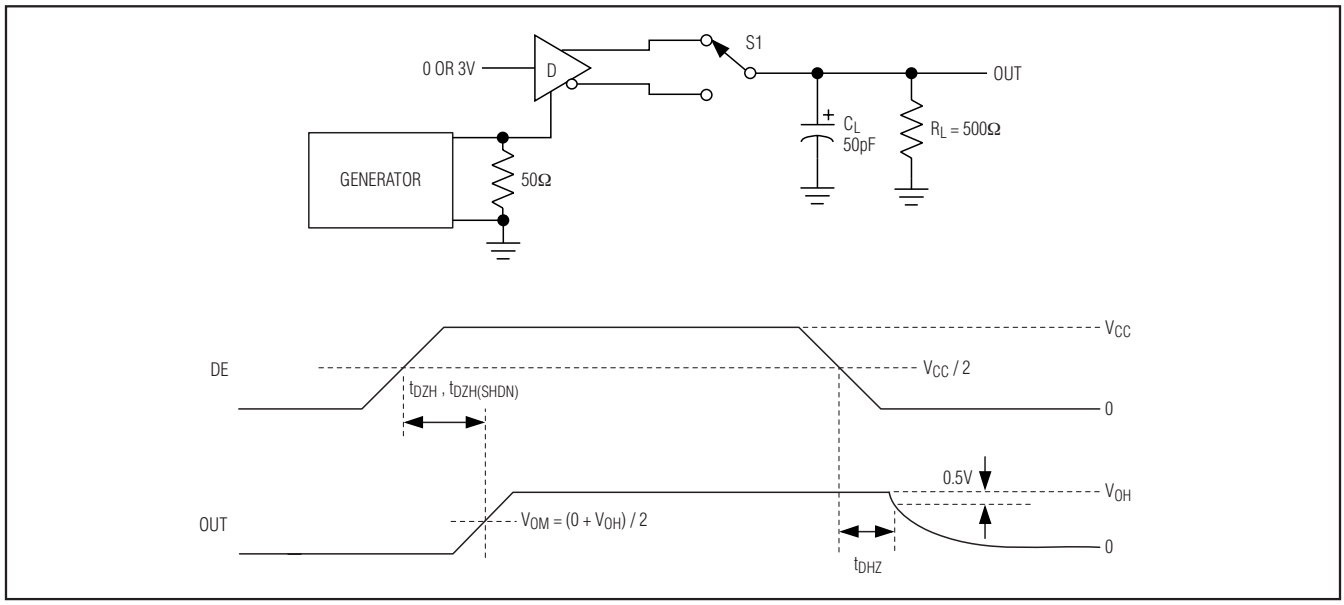

Figure 4a. Driver Enable and Disable Times (t_{DHZ}, t_{DZH}, $t_{DZH(SHDN)}$)

+5.0V, ±15kV ESD-Protected, Half-Duplex/ Full-Duplex, RS-485 Transceiver in µDFN

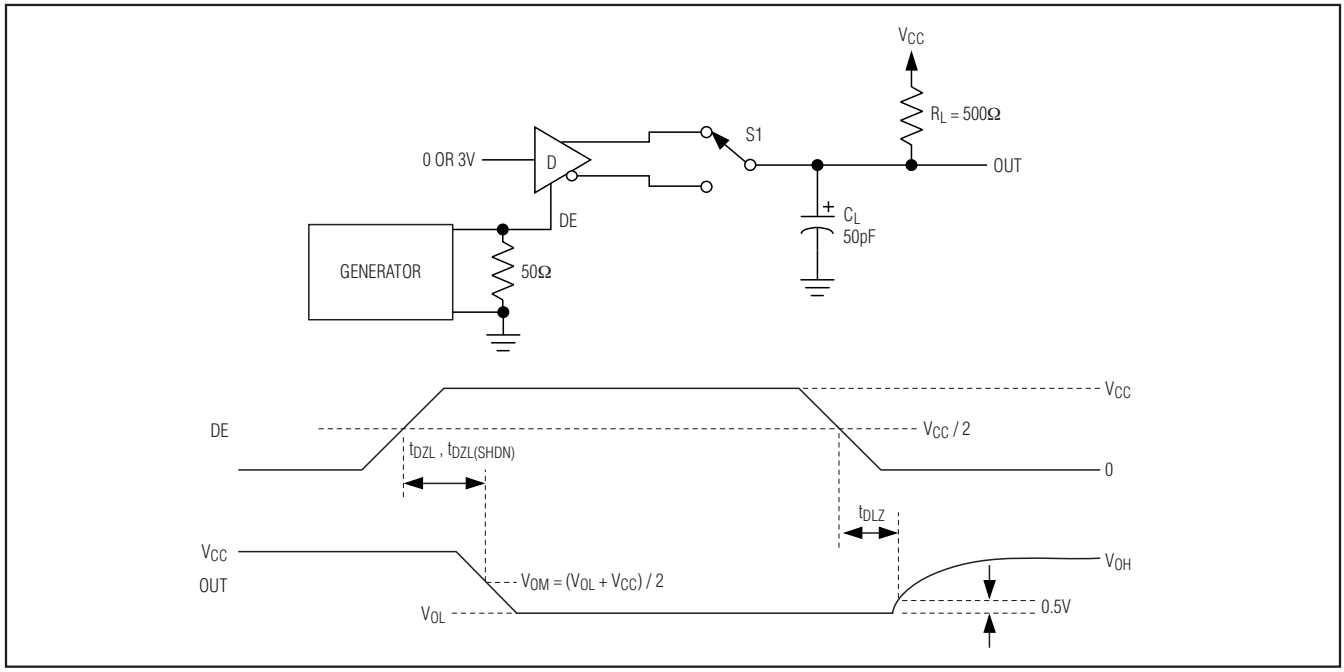

Figure 4b. Driver Enable and Disable Times (t_{DLZ}, t_{DZL}, $t_{DZL(SHDN)}$)

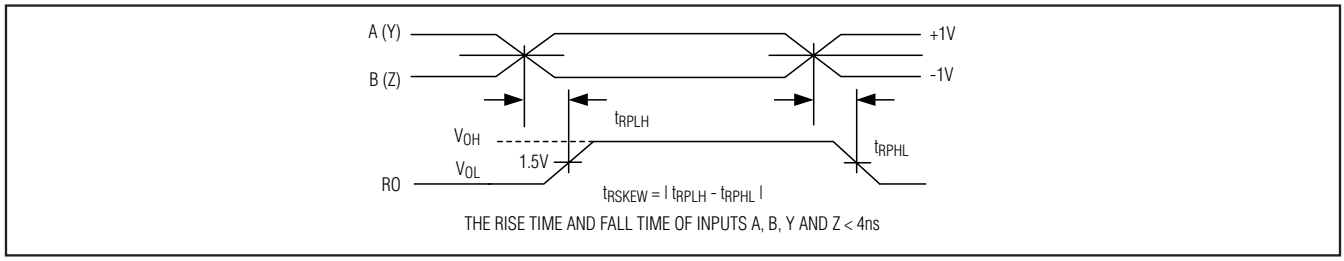

Figure 5. Receiver Propagation Delay

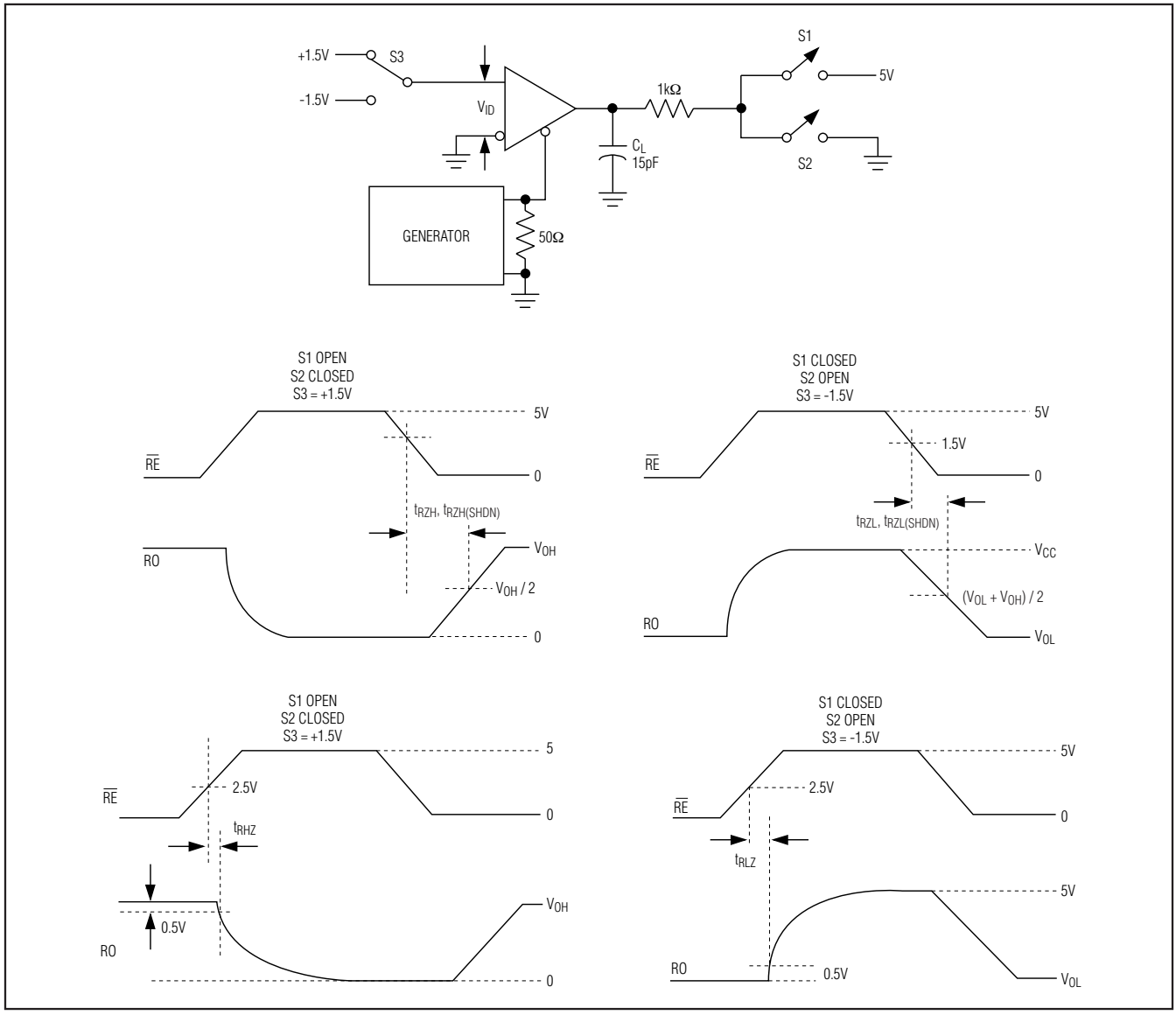

Figure 6. Receiver Disable Time

+5.0V, ±15kV ESD-Protected, Half-Duplex/ Full-Duplex, RS-485 Transceiver in µDFN

Typical Operating Characteristics

(V_{CC} = +5V, T_A = 25°C, unless otherwise noted.)

SUPPLY CURRENT vs. TEMPERATURE

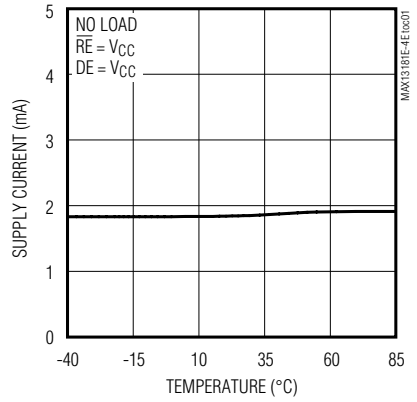

OUTPUT CURRENT vs. RECEIVER OUTPUT HIGH VOLTAGE

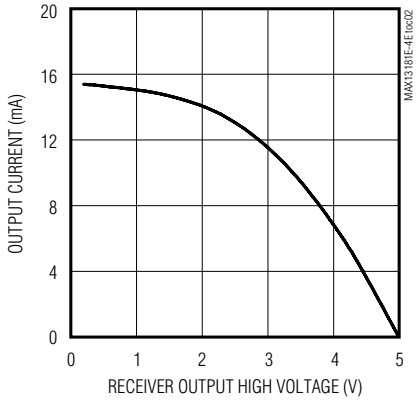

OUTPUT CURRENT vs. RECEIVER OUTPUT LOW VOLTAGE

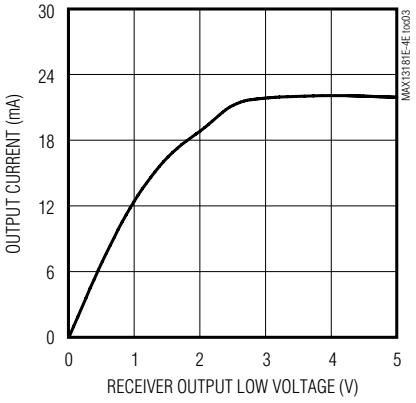

RECEIVER OUTPUT HIGH VOLTAGE vs. TEMPERATURE

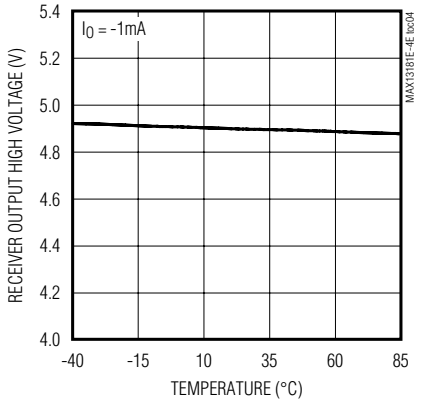

RECEIVER OUTPUT LOW VOLTAGE vs. TEMPERATURE

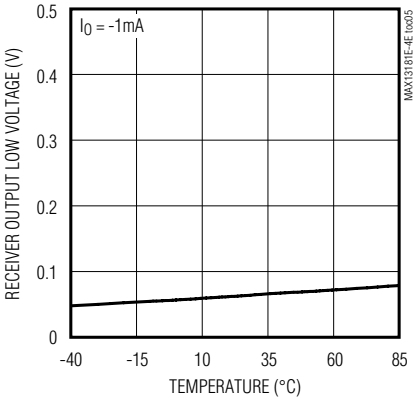

DRIVER DIFFERENTIAL OUTPUT CURRENT vs. DIFFERENTIAL OUTPUT VOLTAGE

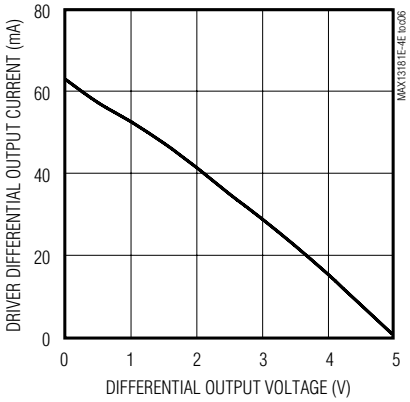

DRIVER DIFFERENTIAL OUTPUT VOLTAGE vs. TEMPERATURE

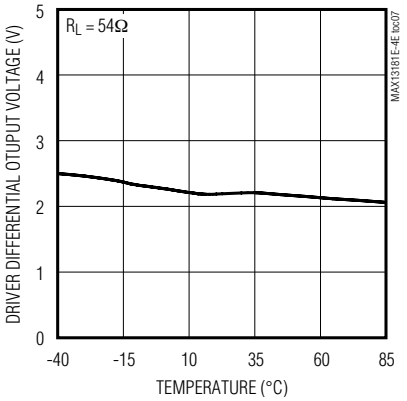

OUTPUT CURRENT vs. TRANSMITTER OUTPUT HIGH VOLTAGE

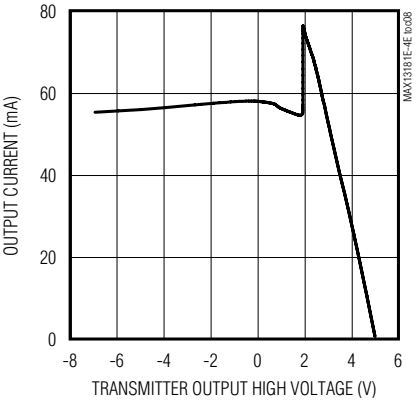

OUTPUT CURRENT vs. TRANSMITTER OUTPUT LOW VOLTAGE

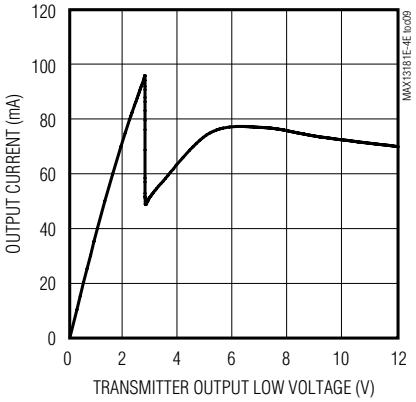

Typical Operating Characteristics (continued)

(V_{CC} = +5V, T_A = 25°C, unless otherwise noted.)

SHUTDOWN CURRENT vs. TEMPERATURE

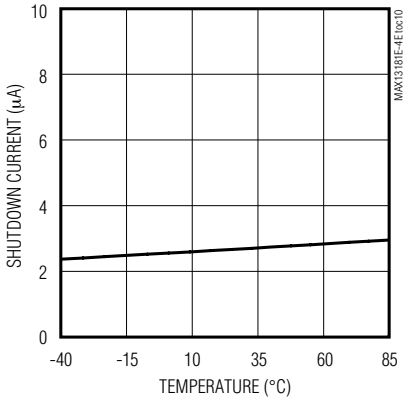

DRIVER PROPAGATION DELAY vs. TEMPERATURE (250kbps) (MAX13182E)

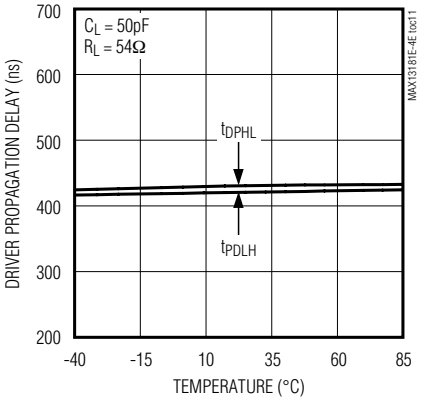

DRIVER PROPAGATION DELAY vs. TEMPERATURE (16Mbps) (MAX13184E)

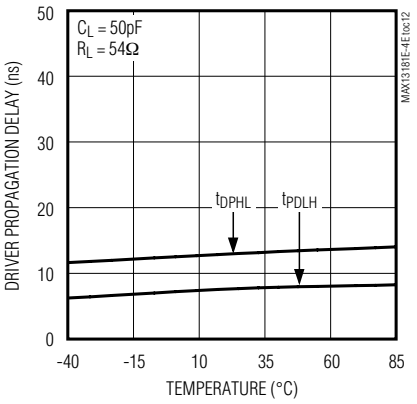

RECEIVER PROPAGATION DELAY vs. TEMPERATURE (250kbps) (MAX13182E)

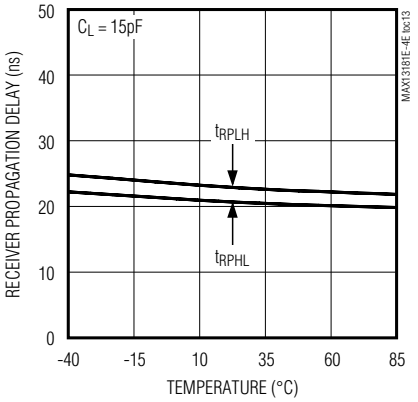

RECEIVER PROPAGATION DELAY vs. TEMPERATURE (16Mbps) (MAX13184E)

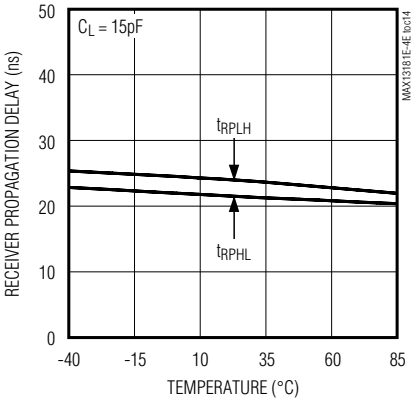

RECEIVER PROPAGATION DELAY (250kbps) (MAX13182E)

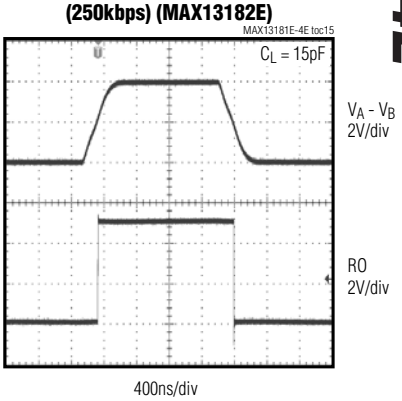

DRIVER PROPAGATION DELAY (250kbps) (MAX13182E)

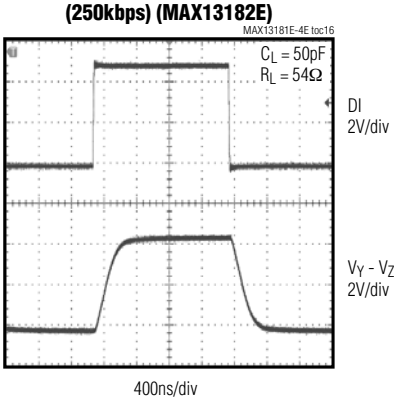

RECEIVER PROPAGATION DELAY (16Mbps) (MAX13184E)

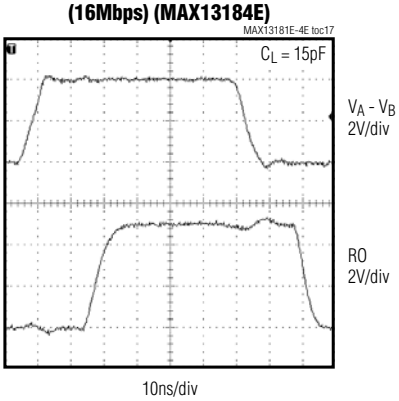

DRIVER PROPAGATION DELAY (16Mbps) (MAX13184E)

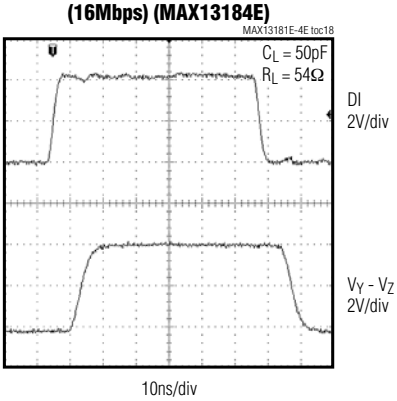

+5.0V, ±15kV ESD-Protected, Half-Duplex/ Full-Duplex, RS-485 Transceiver in µDFN

Functional Tables

MAX13182E/MAX13184E

TRANSMITTING				
INPUT			OUTPUT	
$\overline{RE}$	DE	DI	Z	Y
X	1	0	1	0
X	1	1	0	1
0	0	X	High impedance	High impedance
1	0	X	Shutdown (high impedance)	
RECEIVING				
INPUT			**OUTPUT**	
$\overline{RE}$	DE	A-B	RO	
0	X	≥ 200mV	1	
0	X	≤ -200mV	0	
1	1	X	High impedance	
1	0	X	Shutdown (high impedance)	

X = Don't care.

MAX13181E/MAX13183E

TRANSMITTING			
INPUT		OUTPUT	
DE	DI	Z	Y
1	0	1	0
1	1	0	1
0	X	High impedance	High impedance
RECEIVING			
INPUT			**OUTPUT**
H/$\overline{F}$	DE	A-B	Y-Z	RO
0	X	≥ 200mV	X	1
0	X	≤ -200mV	X	0
1	0	X	≥ 200mV	1
1	0	X	≤ -200mV	0

Functional Diagram

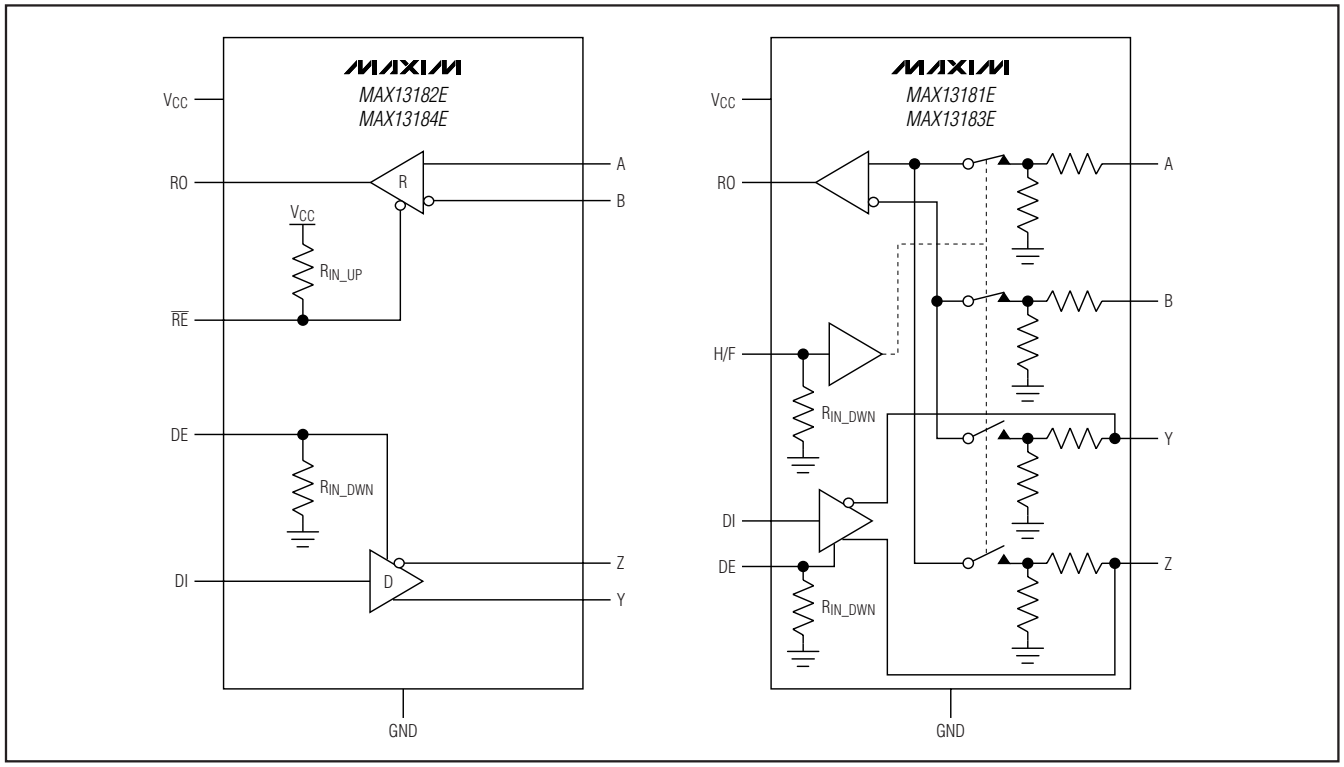

Pin Description

MAX13181E/ MAX13183E	MAX13182E/ MAX13184E	MAX13182E/ MAX13184E	NAME	FUNCTION
µDFN		SO		
1	1	14	V_{CC}	Positive Supply, V_{CC} = +4.5V to +5.5V. Bypass V_{CC} with a 0.1µF ceramic capacitor to ground.
2	2	2	RO	Receiver Output. When RE is low and (A-B) ≥ 200mV, RO is high; if (A-B) ≤ -200mV, RO is low.
—	3	3	$\overline{RE}$	Receiver Output Enable. Drive $\overline{RE}$ low to enable RO. Drive $\overline{RE}$ high to disable the receiver. $\overline{RE}$ input has an internal pullup resistor.
3	—	—	H/$\overline{F}$	Half-/Full-Duplex Selector Input. Connect H/$\overline{F}$ to V_{CC} for half-duplex mode. Leave H/$\overline{F}$ unconnected or connect H/$\overline{F}$ to GND for full-duplex mode. H/$\overline{F}$ input has an internal pulldown resistor.
4	4	4	DE	Driver Output Enable. Drive DE high to enable the driver. Driver output is high impedance when DE is low. DE input has an internal pulldown resistor.
5	5	5	DI	Driver Input. With DE high, a low on DI forces noninverting output low and inverting output high. Similarly, a high on DI forces noninverting output high and inverting output low.
6	6	6, 7	GND	Ground
7	7	9	Y	Noninverting Driver Output. (Also noninverting receiver input in half-duplex mode.)
8	8	10	Z	Inverting Driver Output. (Also inverting receiver input in half-duplex mode.)
9	9	11	B	Inverting Receiver Input
10	10	12	A	Noninverting Receiver Input
—	—	1, 8, 13	N.C.	No Connection. N.C. is not internally connected.

Detailed Description

The MAX13181E–MAX13184E high-speed transceivers for RS-485 communication contain one driver and one receiver. These devices feature 1/8 unit-load input impedance that allows up to 256 receivers on the bus. All devices feature integrated pullup/pulldown resistors on the DE, $\overline{RE}$, and H/$\overline{F}$ inputs to reduce external components. The MAX13182E/MAX13184E feature a low-current shutdown mode for power-sensitive applications.

The MAX13181E/MAX13182E feature reduced slew-rate drivers to minimize EMI and reflections that are caused by improperly terminated cables. The slew-rate limited MAX13181E/MAX13182E allow error-free transmission up to 250Kbps. The MAX13183E/MAX13184E feature full-speed drivers allowing data rate of up to 16Mbps.

The MAX13182E/MAX13184E are configured for full-duplex operation. The MAX13181E/MAX13183E feature selectable half- or full-duplex operation by driving H/$\overline{F}$ input high or low, respectively. All devices operate from a single +5.0V supply.

±15kV ESD Protection

As with all Maxim devices, ESD-protection structures are incorporated on all pins to protect against electrostatic discharges encountered during handling and assembly. The driver outputs of the MAX13181E–MAX13184E family have extra protection against static electricity. Maxim's engineers have developed state-of-the-art structures to protect these driver outputs against ESD of ±15kV with V_{CC} = 5V, and regardless of the logic state of DE and DI.

The ESD-protected pins are tested with reference to the ground pin in a powered-down condition. They are tested to ±15kV using the Human Body Model, ±12kV using the IEC 61000-4-2 Air-Gap Discharge Model, and to ±6kV using the IEC 61000-4-2 Contact Discharge Model.

ESD Test Conditions

ESD performance depends on a variety of conditions. Contact Maxim for a reliability report that documents test setup, test methodology, and test results.

+5.0V, ±15kV ESD-Protected, Half-Duplex/ Full-Duplex, RS-485 Transceiver in µDFN

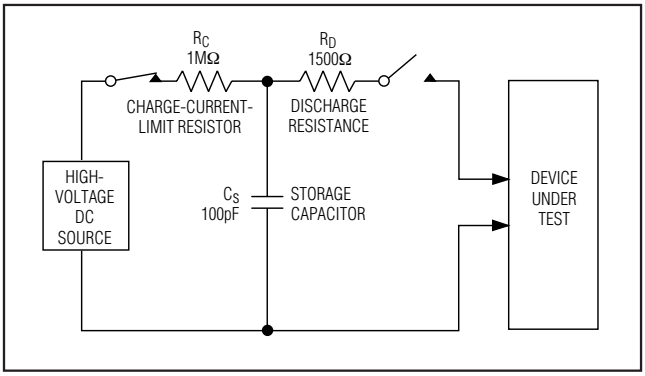

Figure 7a. Human Body ESD Test Model

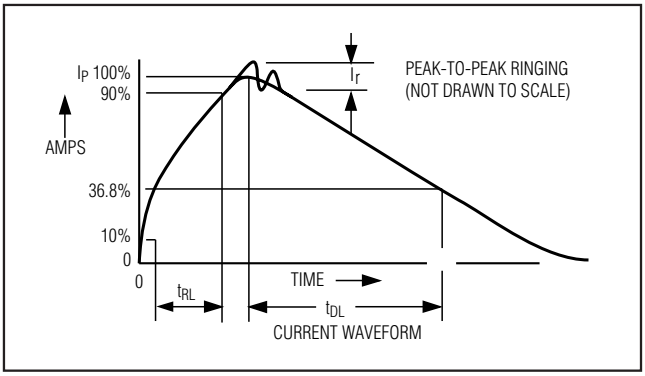

Figure 7b. Human Body Current Waveform

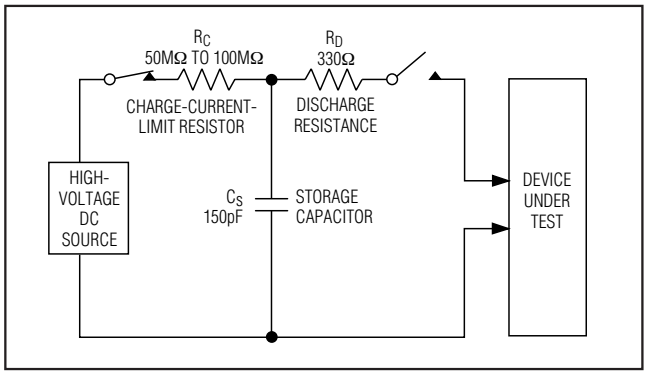

Figure 7c. IEC 61000-4-2 ESD Test Model

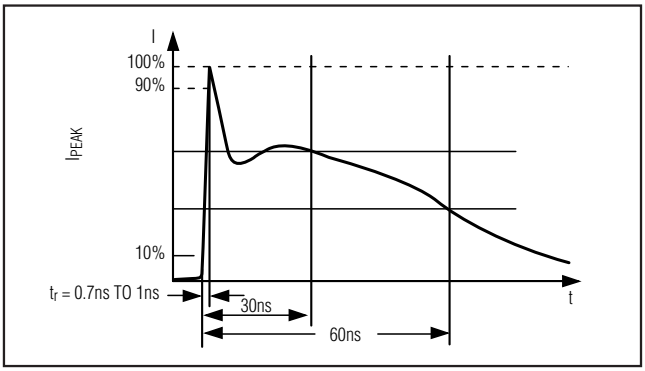

Figure 7d. IEC 61000-4-2 ESD Generator Current Waveform

Human Body Model

Figure 7a shows the Human Body Model, and Figure 7b shows the current waveform it generates when discharged into a low impedance. This model consists of a 100pF capacitor charged to the ESD voltage of interest, which is then discharged into the test device through a 1.5kΩ resistor.

Machine Model

The IEC 61000-4-2 standard covers ESD testing and performance of finished equipment. However, it does not specifically refer to integrated circuits. The MAX13485E/MAX13486E help equipment designs to meet IEC 61000-4-2, without the need for additional ESD protection components.

The major difference between tests done using the Human Body Model and IEC 61000-4-2 is higher peak current in IEC 61000-4-2 because series resistance is lower in the IEC 61000-4-2 model. Hence, the ESD withstand voltage measured to IEC 61000-4-2 is generally lower than that measured using the Human Body Model. Figure 7c shows the IEC 61000-4-2 model, and Figure 7d shows the current waveform for the IEC 61000-4-2 ESD Contact Discharge test.

Applications Information

256 Transceiver on the Bus

The standard RS-485 receiver input impedance is 12kΩ (one-unit load), and the standard driver can drive up to 32 unit loads. The MAX13181E–MAX13184E family transceivers have a 1/8-unit load receiver input impedance (96kΩ), allowing up to 256 transceivers to be connected in parallel on one communication line. Any combination of these devices and/or other RS-485 transceivers with a total of 32 unit loads or less can be connected to the line.

Reduced EMI and Reflections

The MAX13181E/MAX13182E are slew-rate limited, minimizing EMI and reducing reflections caused by improperly terminated cables. This slew-rate limited feature allows error-free data transmission up to 250kbps.

MAX13181E/MAX13183E Low-Power Shutdown Mode

The MAX13181E/MAX13183E feature low power shutdown mode. Low-power shutdown mode is initiated by bringing $\overline{RE}$ high and DE low. In shutdown, the devices typically draw only 2.5µA (typ) of supply current. $\overline{RE}$ and DE can be driven simultaneously. If $\overline{RE}$ is high and

DE is low for 200ns (typ), the devices are guaranteed to enter shutdown.

Enable times t_{ZH} and t_{ZL} (see the *Switching Characteristics*) assume the devices are not in a low-power shutdown state. Enable times $t_{ZH(SHDN)}$ and $t_{ZL(SHDN)}$ assume the devices are in a shutdown state. It takes drivers and receivers longer to become enabled from low-power shutdown mode ($t_{ZH(SHDN)}$, $t_{ZL(SHDN)}$) than from driver-/receiver-disable mode (t_{ZH}, t_{ZL}).

Line Length

The RS-485 standard covers line lengths up to 4000ft. For line lengths greater than 4000ft, use the repeater application shown in Figure 8.

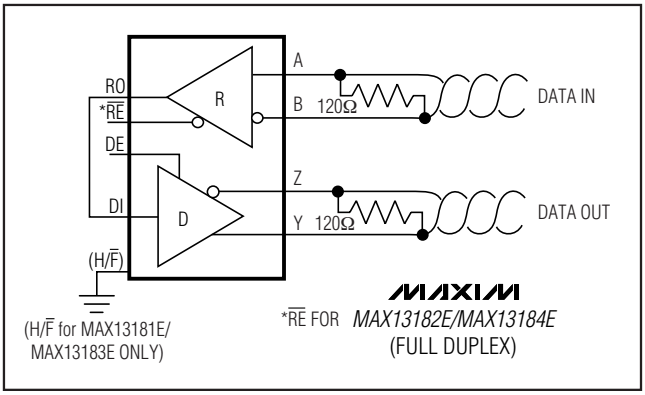

Figure 8. Line Repeater for MAX13181E–MAX13184E

Typical Applications

The MAX13181E–MAX13184E transceivers are designed for bidirectional data communications on multipoint bus transmission lines. The MAX13181E/MAX13183E can be used in either half-duplex or full-duplex configuration. The MAX13182E/MAX13184E are for full-duplex only. Figure 9 shows the typical network application circuit for half-duplex, and Figures 10 and 11 show typical network application circuits for full duplex.

To minimize reflections, terminate the line at both ends in its characteristics impedance, and keep stub lengths off the main line as short as possible. The slew-rate-limited MAX13181E/MAX13182E are more tolerant of imperfect termination.

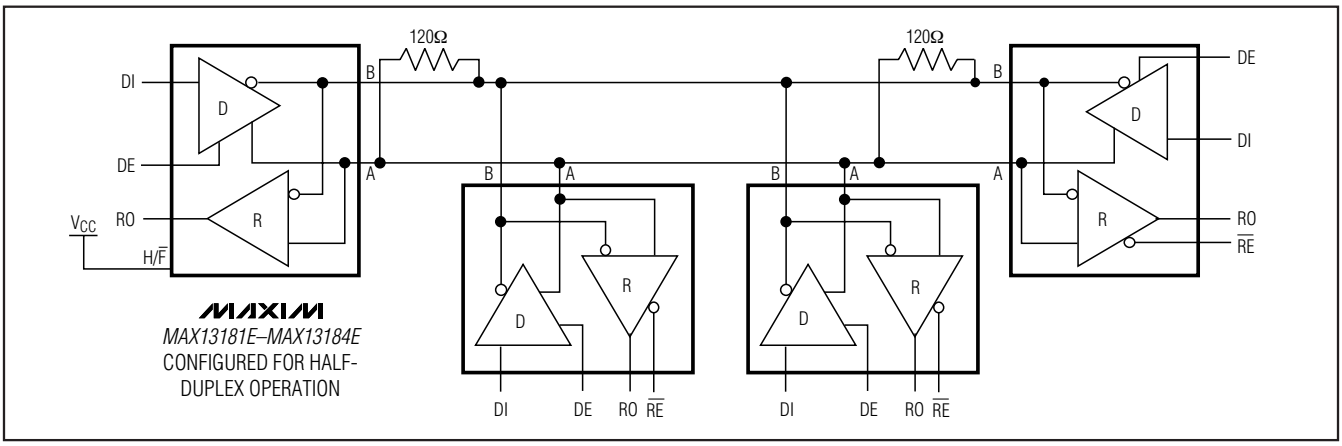

Figure 9. Typical Half-Duplex RS-485 Network

+5.0V, ±15kV ESD-Protected, Half-Duplex/ Full-Duplex, RS-485 Transceiver in µDFN

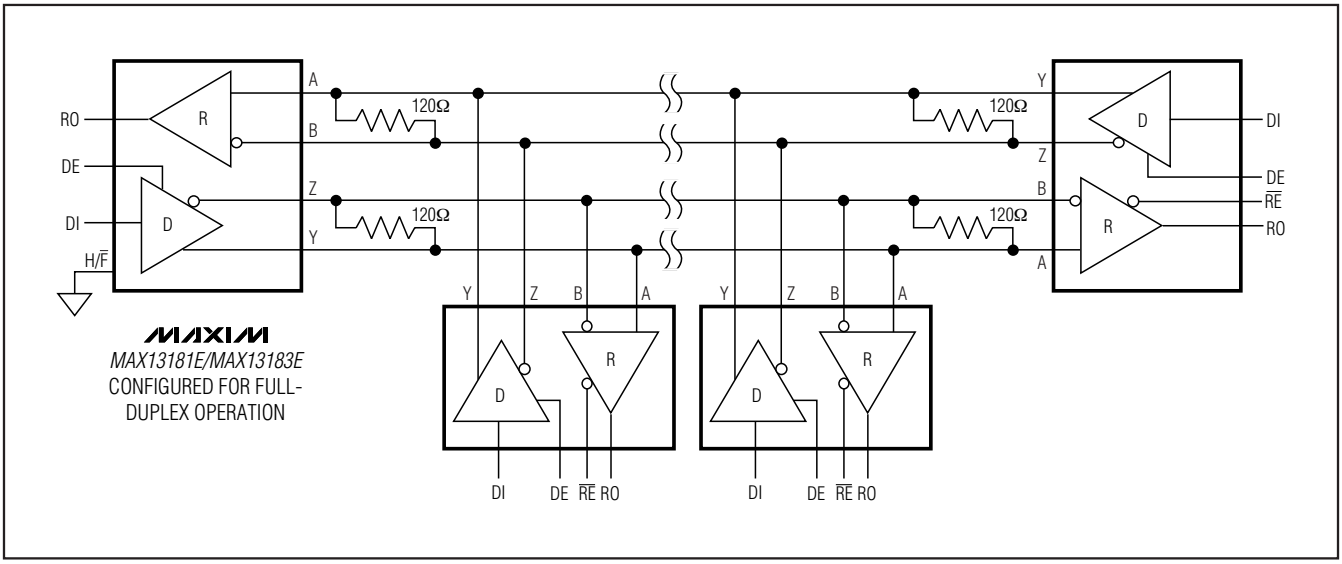

Figure 10. Typical Full-Duplex RS-485 Network

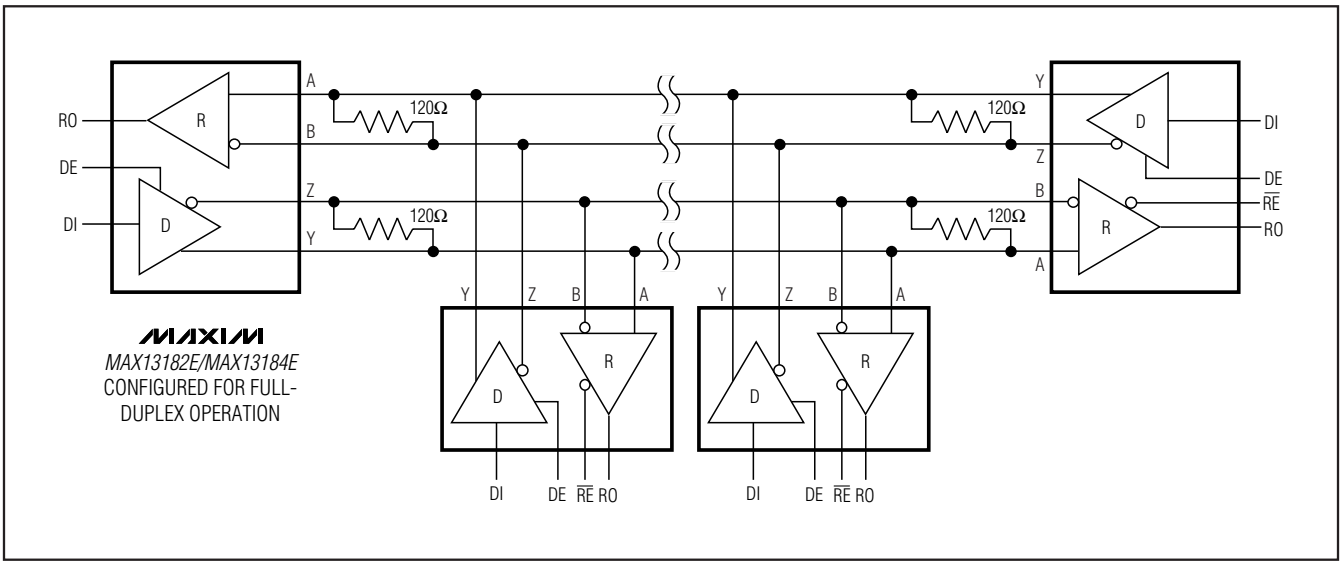

Figure 11. Typical Full-Duplex RS-485 Network

Ordering Information (continued)

PART	TEMP RANGE	PIN-PACKAGE	TOP MARK	PKG CODE
MAX13183EELB+	-40°C to +85°C	10 µDFN	ABA	L1022-1
MAX13184EELB+	-40°C to +85°C	10 µDFN	ABB	L1022-1
MAX13184EESD+	-40°C to +85°C	14 SO	—	S14-1

+Denotes a lead-free package.

Pin Configurations (continued)

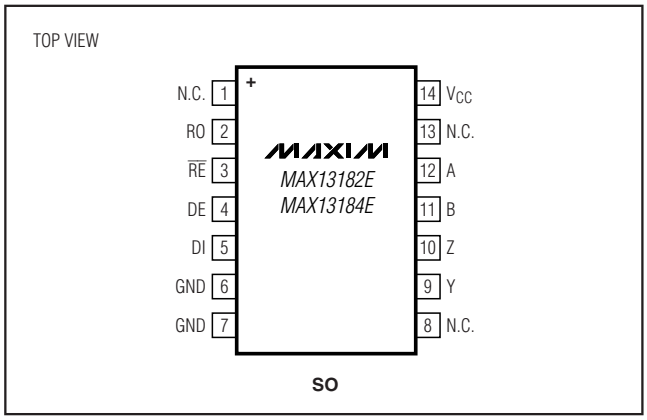

Chip Information

PROCESS: BiCMOS

+5.0V, ±15kV ESD-Protected, Half-Duplex/ Full-Duplex, RS-485 Transceiver in µDFN

Package Information

(The package drawing(s) in this data sheet may not reflect the most current specifications. For the latest package outline information, go to **www.maxim-ic.com/packages**.)

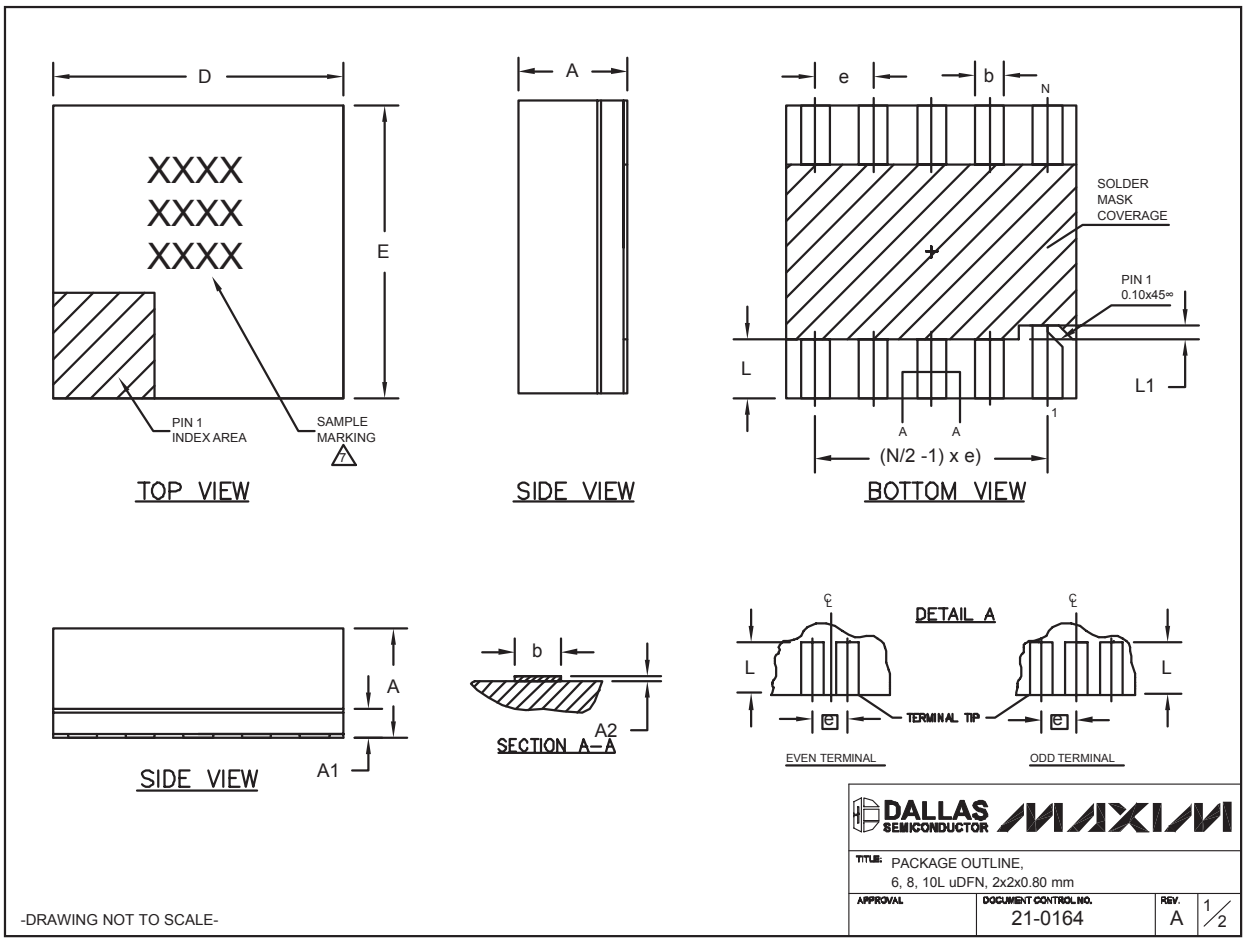

Package Information (continued)

(The package drawing(s) in this data sheet may not reflect the most current specifications. For the latest package outline information, go to **www.maxim-ic.com/packages**.)

COMMON DIMENSIONS			
SYMBOL	MIN.	NOM.	MAX.
A	0.70	0.75	0.80
A1	0.15	0.20	0.25
A2	0.020	0.025	0.035
D	1.95	2.00	2.05
E	1.95	2.00	2.05
L	0.30	0.40	0.50
L1	0.10 REF.		

PACKAGE VARIATIONS				
PKG. CODE	N	e	b	(N/2 -1) x e
L622-1	6	0.65 BSC	0.30±0.05	1.30 REF.
L822-1	8	0.50 BSC	0.25±0.05	1.50 REF.
L1022-1	10	0.40 BSC	0.20±0.03	1.60 REF.

NOTES:
1. ALL DIMENSIONS ARE IN mm. ANGLES IN DEGREES.
2. COPLANARITY SHALL NOT EXCEED 0.08mm.
3. WARPAGE SHALL NOT EXCEED 0.10mm.
4. PACKAGE LENGTH/PACKAGE WIDTH ARE CONSIDERED AS SPECIAL CHARACTERISTIC(S).
5. "N" IS THE TOTAL NUMBER OF LEADS.
6. NUMBER OF LEADS SHOWN ARE FOR REFERENCE ONLY.
7. MARKING IS FOR PACKAGE ORIENTATION REFERENCE ONLY.

-DRAWING NOT TO SCALE-

DALLAS SEMICONDUCTOR MAXIM

TITLE: PACKAGE OUTLINE, 6, 8, 10L uDFN, 2x2x0.80 mm

APPROVAL	DOCUMENT CONTROL NO.	REV.	
	21-0164	A	2/2

+5.0V, ±15kV ESD-Protected, Half-Duplex/ Full-Duplex, RS-485 Transceiver in µDFN

Package Information (continued)

(The package drawing(s) in this data sheet may not reflect the most current specifications. For the latest package outline information, go to **www.maxim-ic.com/packages**.)

SOICN .EPS

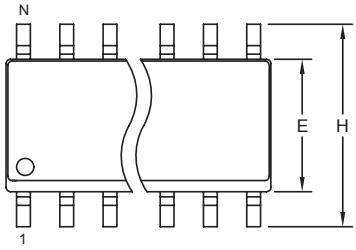

TOP VIEW

	INCHES		MILLIMETERS	
DIM	MIN	MAX	MIN	MAX
A	0.053	0.069	1.35	1.75
A1	0.004	0.010	0.10	0.25
B	0.014	0.019	0.35	0.49
C	0.007	0.010	0.19	0.25
e	0.050 BSC		1.27 BSC	
E	0.150	0.157	3.80	4.00
H	0.228	0.244	5.80	6.20
L	0.016	0.050	0.40	1.27

VARIATIONS:

	INCHES		MILLIMETERS			
DIM	MIN	MAX	MIN	MAX	N	MS012
D	0.189	0.197	4.80	5.00	8	AA
D	0.337	0.344	8.55	8.75	14	AB
D	0.386	0.394	9.80	10.00	16	AC

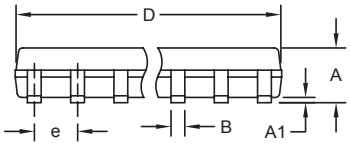

FRONT VIEW

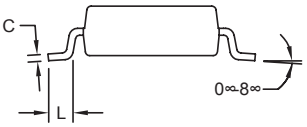

SIDE VIEW

NOTES:
1. D&E DO NOT INCLUDE MOLD FLASH.
2. MOLD FLASH OR PROTRUSIONS NOT TO EXCEED 0.15mm (.006").
3. LEADS TO BE COPLANAR WITHIN 0.10mm (.004").
4. CONTROLLING DIMENSION: MILLIMETERS.
5. MEETS JEDEC MS012.
6. N = NUMBER OF PINS.

DALLAS SEMICONDUCTOR MAXIM

PROPRIETARY INFORMATION

TITLE: PACKAGE OUTLINE, .150" SOIC

APPROVAL	DOCUMENT CONTROL NO.	REV.	
	21-0041	B	1/1

Maxim cannot assume responsibility for use of any circuitry other than circuitry entirely embodied in a Maxim product. No circuit patent licenses are implied. Maxim reserves the right to change the circuitry and specifications without notice at any time.

© 2007 Maxim Integrated Products MAXIM is a registered trademark of Maxim Integrated Products, Inc.

Компания «ЭлектроПласт» предлагает заключение долгосрочных отношений при поставках импортных электронных компонентов на взаимовыгодных условиях!

Наши преимущества:

- Оперативные поставки широкого спектра электронных компонентов отечественного и импортного производства напрямую от производителей и с крупнейших мировых складов;
- Поставка более 17-ти миллионов наименований электронных компонентов;
- Поставка сложных, дефицитных, либо снятых с производства позиций;
- Оперативные сроки поставки под заказ (от 5 рабочих дней);
- Экспресс доставка в любую точку России;
- Техническая поддержка проекта, помощь в подборе аналогов, поставка прототипов;
- Система менеджмента качества сертифицирована по Международному стандарту ISO 9001;
- Лицензия ФСБ на осуществление работ с использованием сведений, составляющих государственную тайну;
- Поставка специализированных компонентов (Xilinx, Altera, Analog Devices, Intersil, Interpoint, Microsemi, Aeroflex, Peregrine, Syfer, Eurofarad, Texas Instrument, Miteq, Cobham, E2V, MA-COM, Hittite, Mini-Circuits,General Dynamics и др.);

Помимо этого, одним из направлений компании «ЭлектроПласт» является направление «Источники питания». Мы предлагаем Вам помощь Конструкторского отдела:

- Подбор оптимального решения, техническое обоснование при выборе компонента;
- Подбор аналогов;
- Консультации по применению компонента;
- Поставка образцов и прототипов;
- Техническая поддержка проекта;
- Защита от снятия компонента с производства.

Как с нами связаться

Телефон: 8 (812) 309 58 32 (многоканальный)
Факс: 8 (812) 320-02-42
Электронная почта: org@eplast1.ru
Адрес: 198099, г. Санкт-Петербург, ул. Калинина, дом 2, корпус 4, литера А.