MICRO SWITCH
a Honeywell Division
FED. MFG. CODE 91929

SWITCH - ENCLOSED

CATALOG LISTING
CLS SERIES CHART 1

THIS DRAWING COVERS A PROPRIETARY ITEM AND IS THE PROPERTY OF MICRO SWITCH. A DIVISION OF HONEYWELL. THIS DRAWING IS NOT TO BE COPIED OR USED WITHOUT THE APPROVAL OF MICRO SWITCH

CABLE PULL NOMENCLATURE

CLS _ _ _ - _ _ _ _

BODY CODE	
A	PG13.5
B	1/2 NPT
C	20MM
D	PF 1/2
E	3/4 NPT

BASIC SWITCH CODE	
1	NC DIRECT ACTING
2	1NO - 1NC SNAP ACTION (HDLS) MOMENTARY HEADS ONLY
3	1NO - 1NC SNAP ACTION (GLS) MOMENTARY HEADS ONLY
4	1NO - 1NC DIRECT ACTING
5	1NO - 1NC DIRECT ACTING 240V NEON INDICATOR
6	1NO - 1NC DIRECT ACTING 120V NEON INDICATOR
7	1NO - 1NC DIRECT ACTING 24V LED INDICATOR
8	2NC DIRECT ACTING
9	SPECIAL BASIC SEE LETTERED MOD CODES

OPERATING HEAD CODE	
A	"MAINTAINED"
B	"MOMENTARY"
N	"MOMENTARY" W/O BROKEN CABLE DETECTION
T	"MAINTAINED" SNAP ACTION

MODIFICATION CODES *	
B	1NO-3NC SLOW ACTING
E	2NO-2NC SLOW ACTING
G	5-PIN CONNECTOR BRAD HARRISION P/N 41310 OR EQUIV.
N	240V NEON INDICATOR W/SPEC. BASIC
M	120V NEON INDICATOR W/SPEC. BASIC
P	24V LED INDICATOR W/SPEC. BASIC
1	HEAD ORIENTED LEFT
2	HEAD ORIENTED FRONT
3	HEAD ORIENTED REAR

*WHEN MORE THAN ONE MODIFICATION CODE IS SPECIFIED THEY SHALL BE LISTED IN ASCENDING ALPHA-NUMERIC ORDER

NOTE:

1 - COVER AND OPERATING HEAD ATTACHED WITH "T-15" TAMPER PROOF TORX DRIVE SCREWS
2 - HARDWARE PACKET CONSISTING OF TURNBUCKLE, NUTS, END SPRING, AND "T-15" TAMPER PROOF TORX DRIVER BIT INCLUDED WITH PRODUCT
3 - OPERATING HEAD MAY BE POSITIONED IN ANY OF FOUR DIRECTIONS
4 - NOMENCLATURE IS PROVIDED FOR IDENTIFICATION OF EXISTING LISTINGS. NOT ALL COMBINATIONS ARE POSSIBLE

ANSI Y14.5M-1982 APPLIES

THIRD ANGLE PROJECTION
SCALE NONE
DO NOT SCALE PRINT
UNLESS OTHERWISE SPECIFIED TOLERANCES ARE

ONE PLACE	(.0)	±.030
TWO PLACE	(.00)	±.015
THREE PLACE	(.000)	±.005
ANGLES		±

WEIGHT

CATALOG LISTING CLS SERIES CHART 1
PAGE 1 OF 3
RELEASE NO. PR-21597
REPLACES
ISSUE 9
CHECK
REVISIONS

A	CO-93942	GLH 7 DEC 98
B	CO-94714	GLH 7 APR 99
C	CO-95788	MAM 25 OCT 99
D	CO-95967	DCS 3 MAY 00
E	201010	TSM 10AUG00
F	201144	GLH 26SEP00
G	202321	DCS 27 FEB 01

CHECK
LJK 7 DEC 98
CHECK
LJK 5 APR 96
DRAWN
PTC/CAD

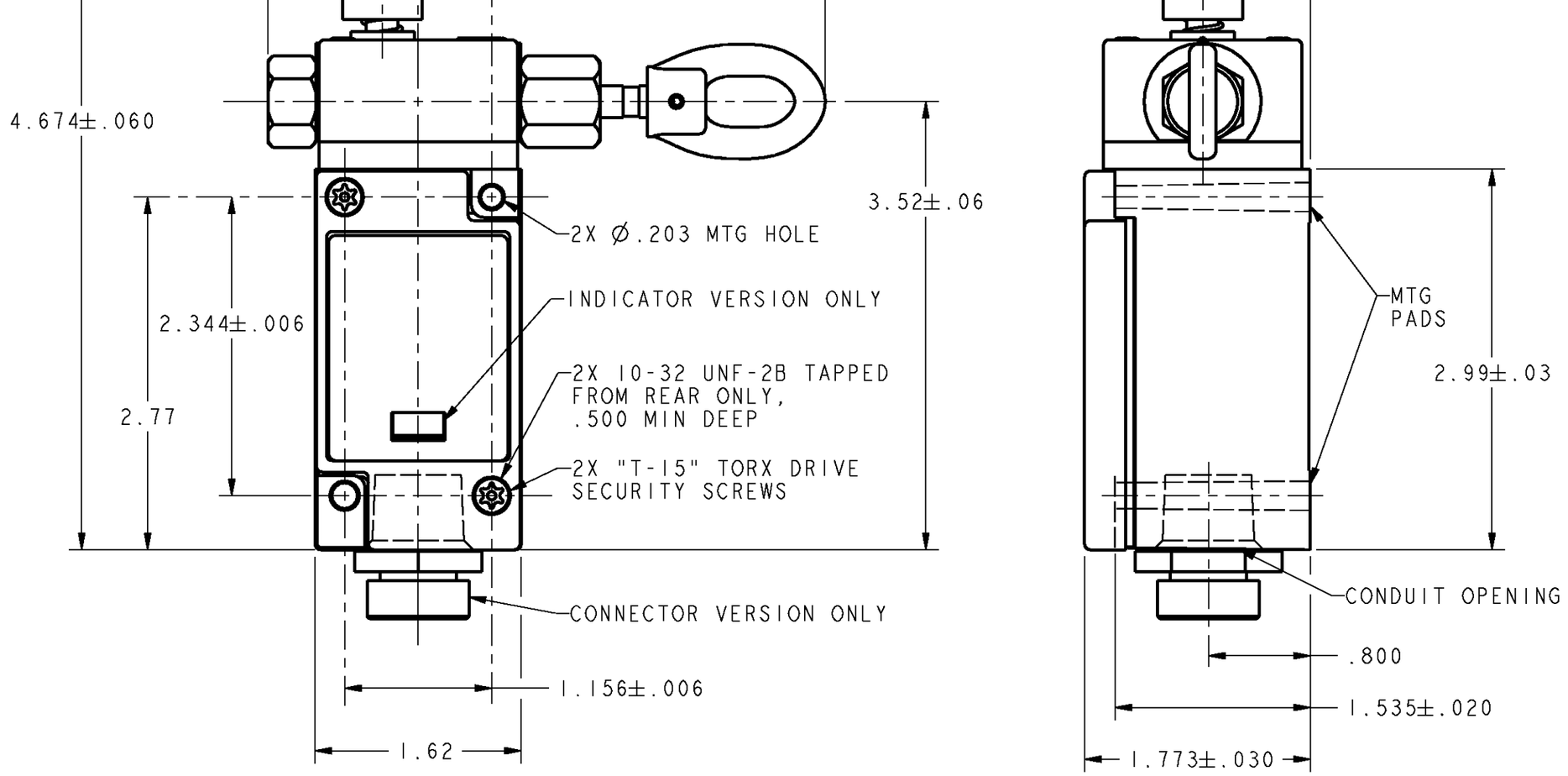

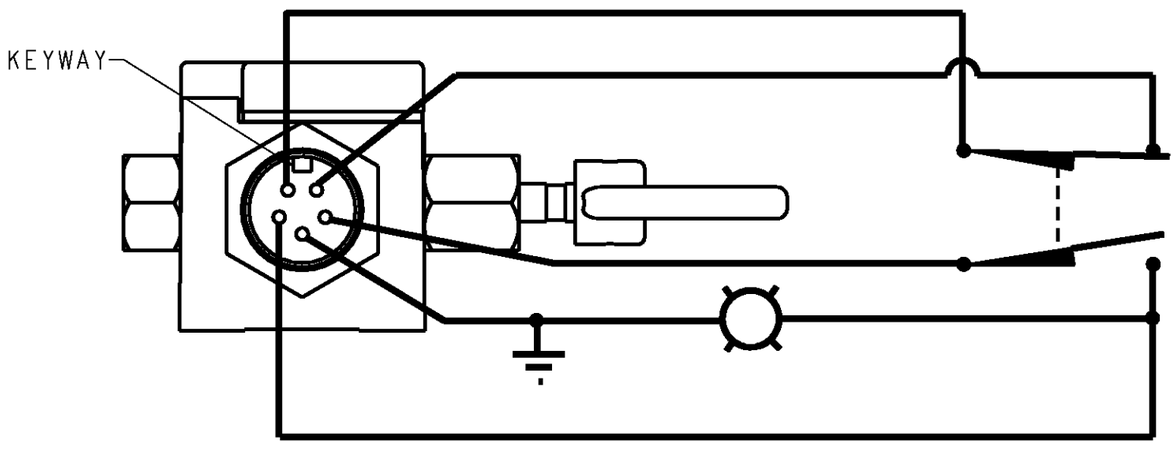

MODIFICATION CODE G
WIRING DIAGRAM

WITH OPERATING HEAD CODES "A" & "N"

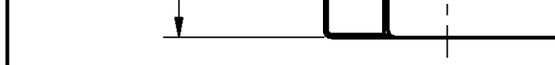

WITH OPERATIN

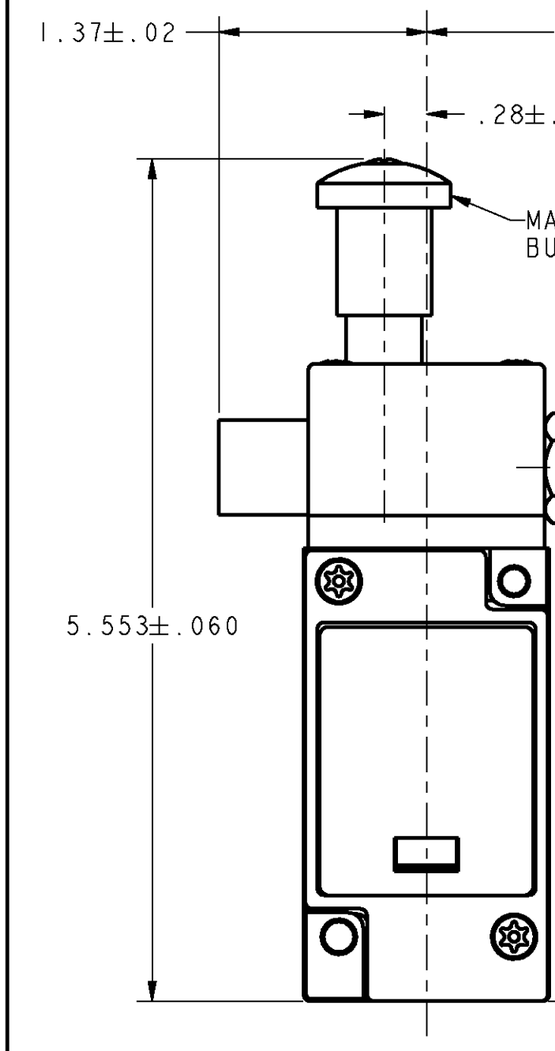

WITH OPERAT

ANSI Y14.5M-1982 APPLIES

THIS DRAWING COVERS A PROPRIETARY ITEM AND IS THE PROPERTY OF MICRO SWITCH. A
HONEYWELL. THIS DRAWING IS NOT TO BE COPIED OR USED WITHOUT THE APPROVAL OF M

MICRO SWITCH
a Honeywell Division
FED. MFG. CODE 91929

SWITCH - ENCLOSED

CATA
CLS SER

CLS SERIES CHART 1
PAGE 2 OF 3
RELEASE NO. CO-93942
DRAWING NUMBER
ISSUE 9
REPLACES
CHECK

REVISIONS
A CO-95788 MAM 22 OCT 99
B CO-95967 DCS 3 MAY 00
C 201010 TSM 10AUG00
D 201144 GLH 26SEP00
E 202321 DCS 27 FEB 01

PTC/CAD 3D
DRAWN MAM 22 OCT 99

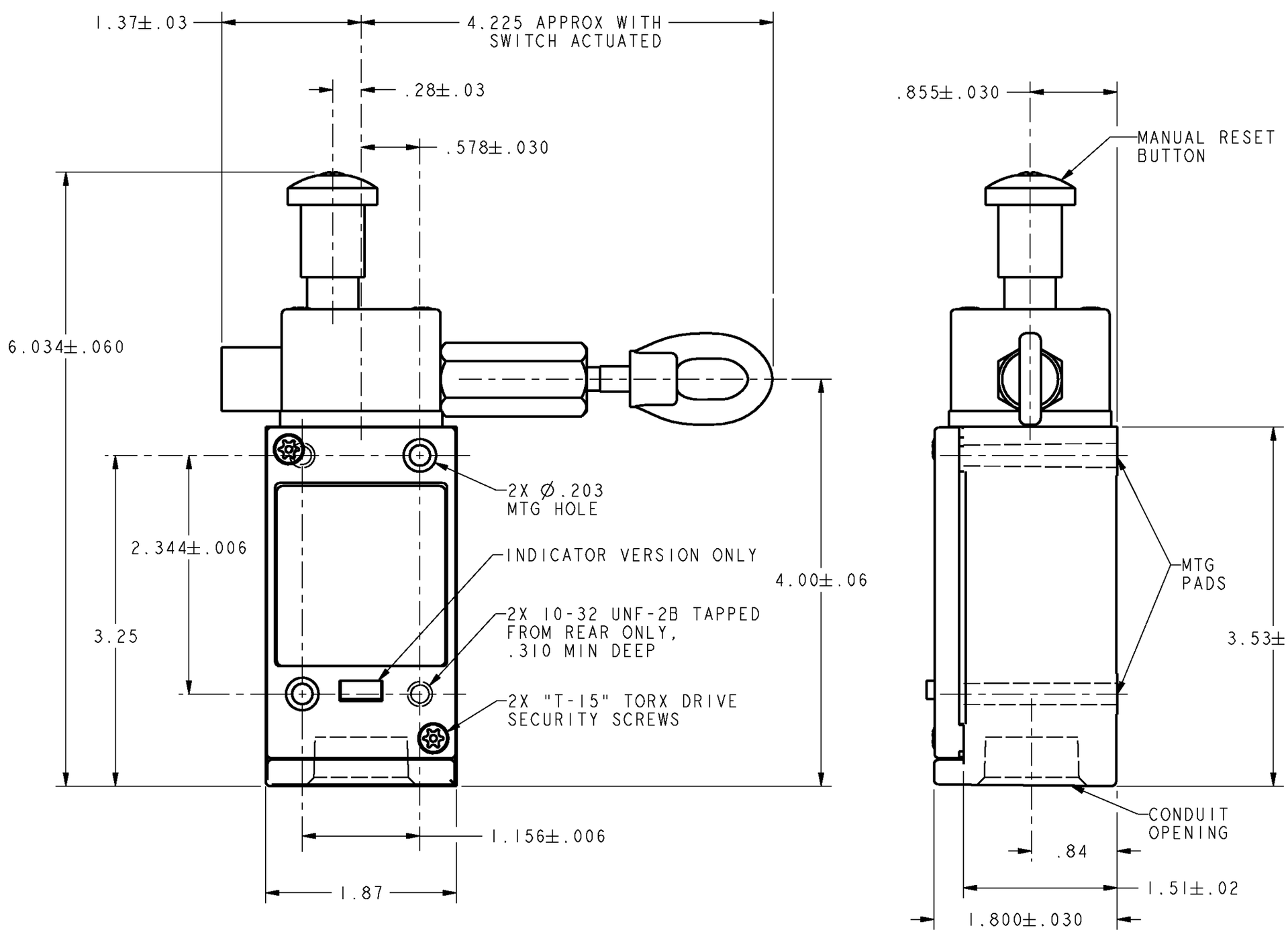

WITH OPERATING HEAD CODE "T"

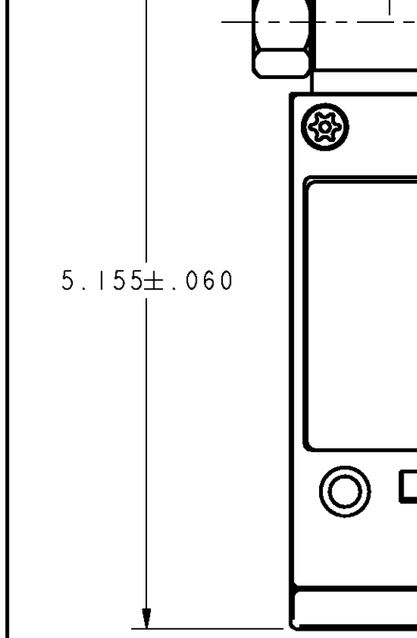

WITH OPER

CLS SERIES CHART 1

PAGE 3 OF 3

RELEASE NO. CO-93942

REPLACES

DRAWING NUMBER

ISSUE 9

CHECK

REVISIONS

A	CO-95788	MAM 22 OCT 99
B	CO-95967	DCS 4 MAY 00
C	201010	TSM 10AUG00
D	201144	GLH 26SEP00
E	202321	DCS 27 FEB 01

22 OCT 99

CHECK

PTC/CAD 3D

DRAWN MAM 22OCT99

THIS DRAWING COVERS A PROPRIETARY ITEM AND IS THE PROPERTY OF MICRO SWITCH. A
HONEYWELL. THIS DRAWING IS NOT TO BE COPIED OR USED WITHOUT THE APPROVAL OF M

MICRO SWITCH a Honeywell Division

FED. MFG. CODE 91929

SWITCH - ENCLOSED

CATA

CLS SER

ANSI Y14.5M-1982 APPLIES

MICRO SWITCH
a Honeywell Division
FED. MFG. CODE 91929

SWITCH - ENCLOSED

CATALOG LISTING
CLS SERIES CHART 1

THIS DRAWING COVERS A PROPRIETARY ITEM AND IS THE PROPERTY OF MICRO SWITCH. A DIVISION OF HONEYWELL. THIS DRAWING IS NOT TO BE COPIED OR USED WITHOUT THE APPROVAL OF MICRO SWITCH

CABLE PULL NOMENCLATURE

CLS _ _ _ - _ _ _ _

BODY CODE	
A	PG13.5
B	1/2 NPT
C	20MM
D	PF 1/2
E	3/4 NPT

BASIC SWITCH CODE	
1	NC DIRECT ACTING
2	1NO - 1NC SNAP ACTION (HDLS) MOMENTARY HEADS ONLY
3	1NO - 1NC SNAP ACTION (GLS) MOMENTARY HEADS ONLY
4	1NO - 1NC DIRECT ACTING
5	1NO - 1NC DIRECT ACTING 240V NEON INDICATOR
6	1NO - 1NC DIRECT ACTING 120V NEON INDICATOR
7	1NO - 1NC DIRECT ACTING 24V LED INDICATOR
8	2NC DIRECT ACTING
9	SPECIAL BASIC SEE LETTERED MOD CODES

OPERATING HEAD CODE	
A	"MAINTAINED"
B	"MOMENTARY"
N	"MAINTAINED" W/O BROKEN CABLE DETECTION
T	"MAINTAINED" SNAP ACTION

MODIFICATION CODES *	
B	1NO-3NC SLOW ACTING
E	2NO-2NC SLOW ACTING
G	5-PIN CONNECTOR BRAD HARRISION P/N 41310 OR EQUIV.
N	240V NEON INDICATOR W/SPEC. BASIC
M	120V NEON INDICATOR W/SPEC. BASIC
P	24V LED INDICATOR W/SPEC. BASIC
1	HEAD ORIENTED LEFT
2	HEAD ORIENTED FRONT
3	HEAD ORIENTED REAR

*WHEN MORE THAN ONE MODIFICATION CODE IS SPECIFIED THEY SHALL BE LISTED IN ASCENDING ALPHA-NUMERIC ORDER

NOTE:

1 - COVER AND OPERATING HEAD ATTACHED WITH "T-15" TAMPER PROOF TORX DRIVE SCREWS
2 - HARDWARE PACKET CONSISTING OF TURNBUCKLE, NUTS, END SPRING, AND "T-15" TAMPER PROOF TORX DRIVER BIT INCLUDED WITH PRODUCT
3 - OPERATING HEAD MAY BE POSITIONED IN ANY OF FOUR DIRECTIONS
4 - NOMENCLATURE IS PROVIDED FOR IDENTIFICATION OF EXISTING LISTINGS. NOT ALL COMBINATIONS ARE POSSIBLE

ANSI Y14.5M-1982 APPLIES

THIRD ANGLE PROJECTION
SCALE NONE
DO NOT SCALE PRINT

UNLESS OTHERWISE SPECIFIED TOLERANCES ARE		
ONE PLACE	(.0)	±.030
TWO PLACE	(.00)	±.015
THREE PLACE	(.000)	±.005
ANGLES		±

WEIGHT

CATALOG LISTING CLS SERIES CHART 1
PAGE 1 OF 3
RELEASE NO. PR-21597
REPLACES -
ISSUE 14
CHECK
REVISIONS
A 206479 TSM 19SEP02
B 207283 GLH 27JAN03
CHECK 7 DEC 98 LJK
CHECK 5 APR 96 LJK
DRAWN
PTC/CAD

BASIC SWITCH CODES 1 - 8

CLS SERIES CHART 1

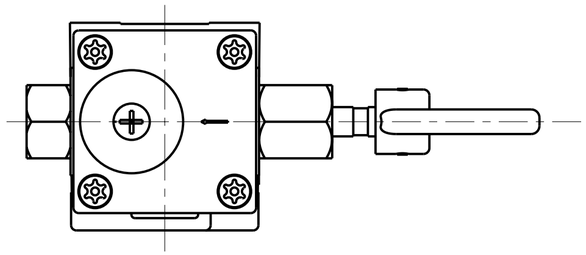

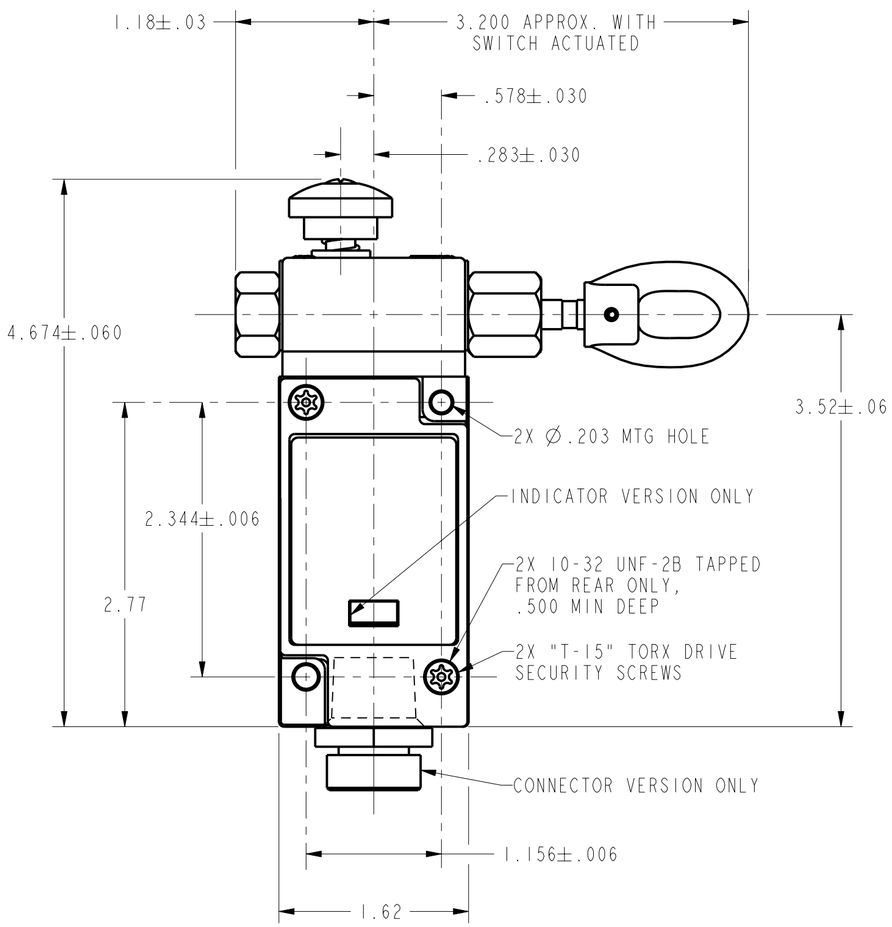

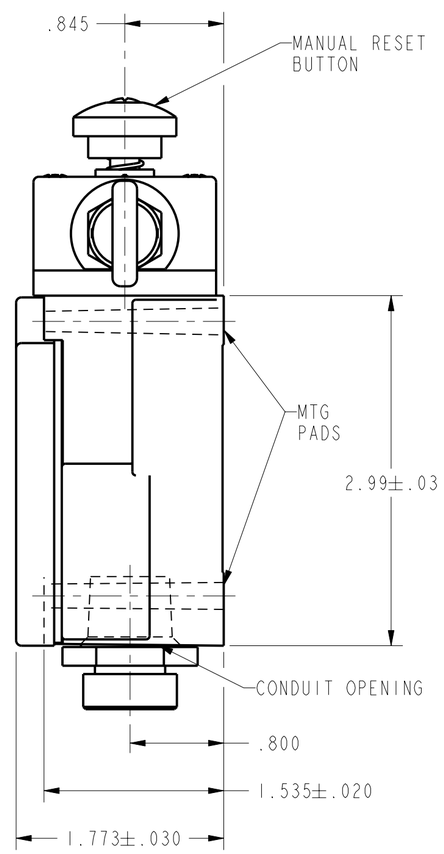

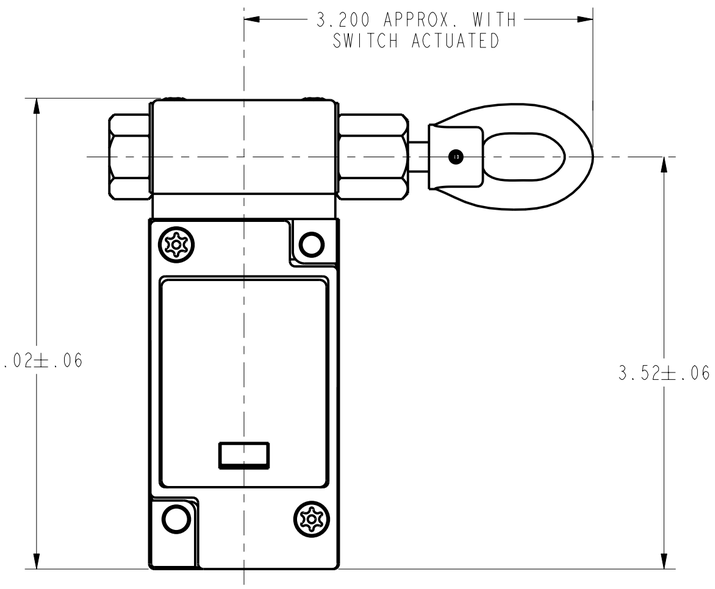

WITH OPERATING HEAD CODE "B"

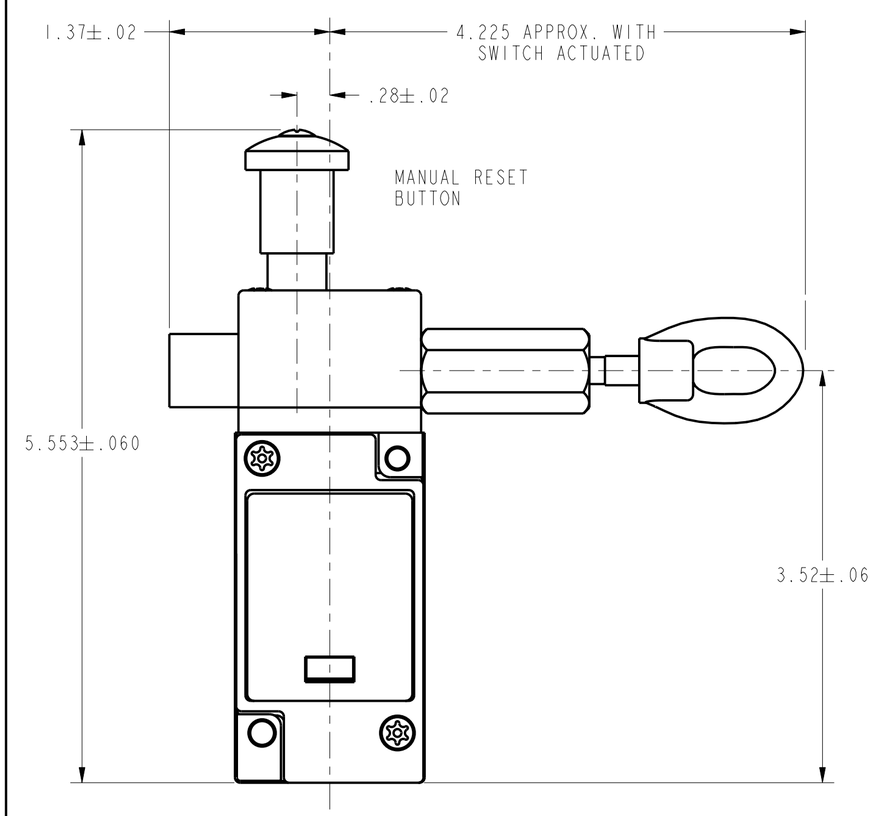

WITH OPERATING HEAD CODE "T"

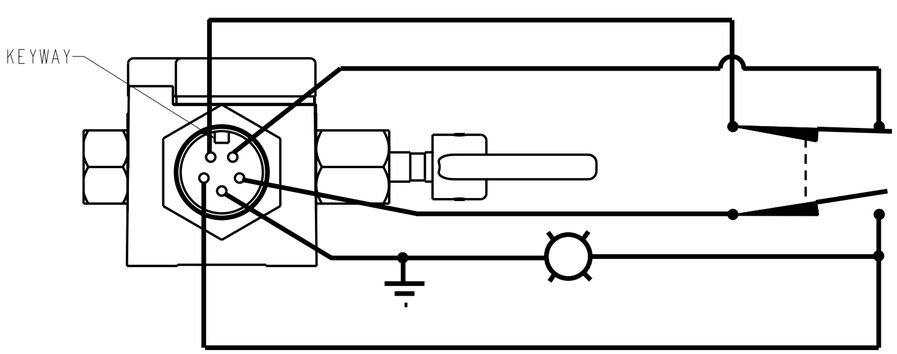

MODIFICATION CODE G
WIRING DIAGRAM

WITH OPERATING HEAD CODES "A" & "N"

ANSI Y14.5M-1982 APPLIES

THIS DRAWING COVERS A PROPRIETARY ITEM AND IS THE PROPERTY OF MICRO SWITCH, A DIVISION OF HONEYWELL. THIS DRAWING IS NOT TO BE COPIED OR USED WITHOUT THE APPROVAL OF MICRO SWITCH.

MICRO SWITCH a Honeywell Division
FED. MFG. CODE 91929

SWITCH - ENCLOSED

CATALOG LISTING
CLS SERIES CHART 1

THIRD ANGLE PROJECTION
SCALE FULL
DO NOT SCALE PRINT

UNLESS OTHERWISE SPECIFIED TOLERANCES ARE

ONE PLACE	(.0)	±.030
TWO PLACES	(.00)	±.015
THREE PLACES	(.000)	±.005
ANGLES		±

WEIGHT

CLS SERIES CHART 1
REPLACES -
PAGE 2 OF 3
RELEASE NO. CO-93942
DRAWING NUMBER
ISSUE 14
CHECK

REVISIONS

A	CO-95788	MAM 22 OCT 99
B	CO-95967	DCS 3 MAY 00
C	201010	TSM 10AUG00
D	201144	GLH 26SEP00
E	202321	DCS 27 FEB 01
F	205423	GRT 22 APR 02
G	205798	TSM 17 JUN 02
H	205952	GLH 12 JUL 02
J	206479	TSM 19 SEP 02
K	207283	GLH 27JAN03

PTC/CAD 3D
DRAWN MAM 22 OCT 99

BASIC SWITCH CODE 9

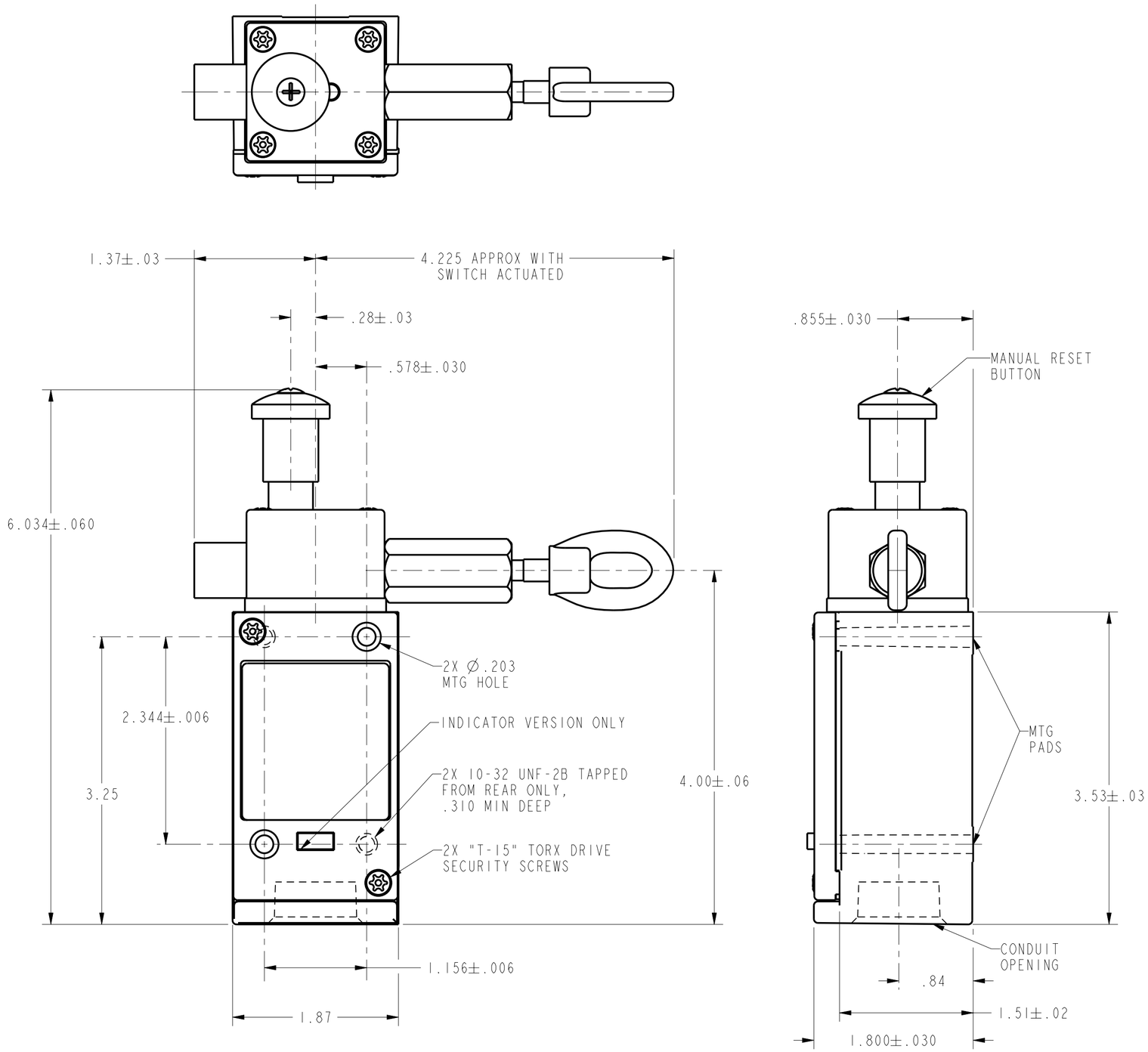

WITH OPERATING HEAD CODE "T"

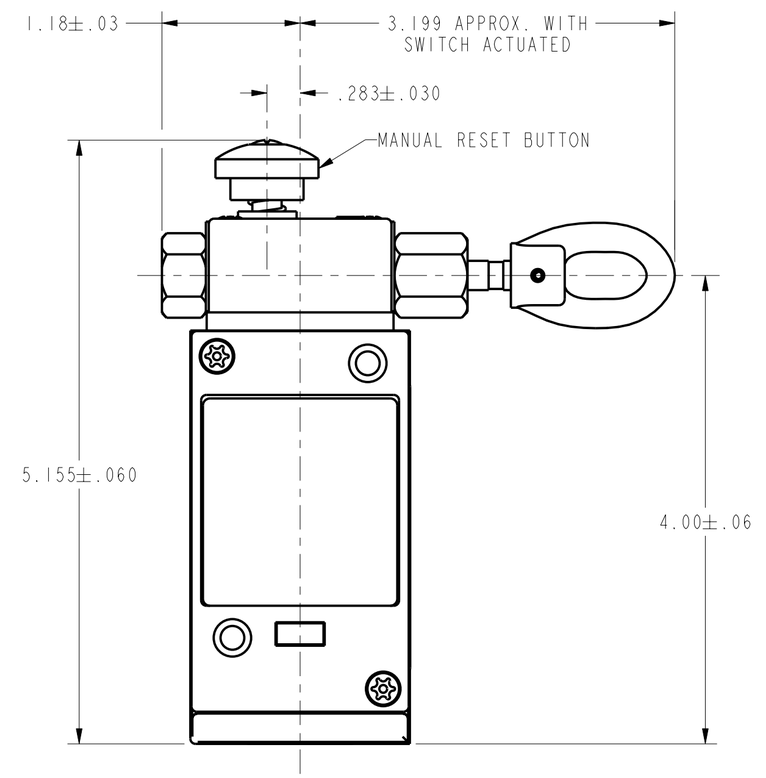

WITH OPERATING HEAD CODE "A"

THIRD ANGLE PROJECTION	
SCALE FULL	
DO NOT SCALE PRINT	
UNLESS OTHERWISE SPECIFIED TOLERANCES ARE	
ONE PLACE (.0)	±.030
TWO PLACES (.00)	±.015
THREE PLACES (.000)	±.005
ANGLES	±
WEIGHT	

THIS DRAWING COVERS A PROPRIETARY ITEM AND IS THE PROPERTY OF MICRO SWITCH, A DIVISION OF HONEYWELL. THIS DRAWING IS NOT TO BE COPIED OR USED WITHOUT THE APPROVAL OF MICRO SWITCH.

MICRO SWITCH a Honeywell Division
FED. MFG. CODE 91929

SWITCH - ENCLOSED

CATALOG LISTING
CLS SERIES CHART 1

ANSI Y14.5M-1982 APPLIES

CLS SERIES CHART 1
PAGE 3 OF 3
RELEASE NO CO-93942
REPLACES -
DRAWING NUMBER
ISSUE 14
CHECK
REVISIONS
A CO-95788 MAM 22 OCT 99
B CO-95967 DCS 4 MAY 00
C 201010 TSM 10AUG00
D 201144 GLH 26SEP00
E 202321 DCS 27 FEB 01
F 205423 GRI 22 APR 02
G 205798 TSM 17 JUN 02
H 205952 GLH 12 JUL 02
J 206479 TSM 19 SEP 02
K 207283 GLH 27JAN03
22 OCT 99
PTC/CAD 3D
DRAWN MAM 22OCT99

Компания «ЭлектроПласт» предлагает заключение долгосрочных отношений при поставках импортных электронных компонентов на взаимовыгодных условиях!

Наши преимущества:

- Оперативные поставки широкого спектра электронных компонентов отечественного и импортного производства напрямую от производителей и с крупнейших мировых складов;
- Поставка более 17-ти миллионов наименований электронных компонентов;
- Поставка сложных, дефицитных, либо снятых с производства позиций;
- Оперативные сроки поставки под заказ (от 5 рабочих дней);
- Экспресс доставка в любую точку России;
- Техническая поддержка проекта, помощь в подборе аналогов, поставка прототипов;
- Система менеджмента качества сертифицирована по Международному стандарту ISO 9001;
- Лицензия ФСБ на осуществление работ с использованием сведений, составляющих государственную тайну;
- Поставка специализированных компонентов (Xilinx, Altera, Analog Devices, Intersil, Interpoint, Microsemi, Aeroflex, Peregrine, Syfer, Eurofarad, Texas Instrument, Miteq, Cobham, E2V, MA-COM, Hittite, Mini-Circuits,General Dynamics и др.);

Помимо этого, одним из направлений компании «ЭлектроПласт» является направление «Источники питания». Мы предлагаем Вам помощь Конструкторского отдела:

- Подбор оптимального решения, техническое обоснование при выборе компонента;
- Подбор аналогов;
- Консультации по применению компонента;
- Поставка образцов и прототипов;
- Техническая поддержка проекта;
- Защита от снятия компонента с производства.

Как с нами связаться

Телефон: 8 (812) 309 58 32 (многоканальный)
Факс: 8 (812) 320-02-42
Электронная почта: org@eplast1.ru
Адрес: 198099, г. Санкт-Петербург, ул. Калинина, дом 2, корпус 4, литера А.