# D Subminiature

# Connectors

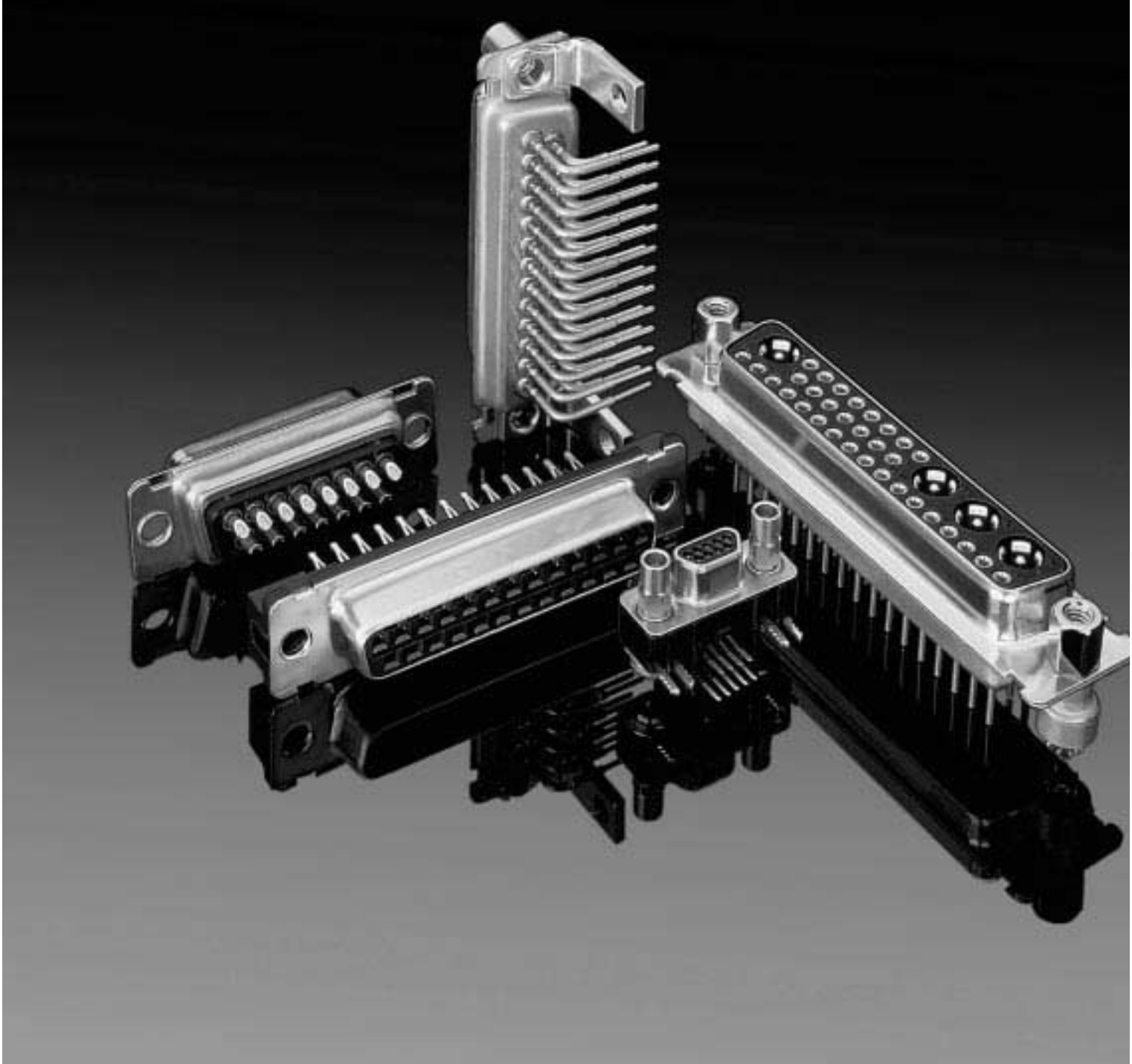

# Contents

The ITT Cannon D Subminiature family of connectors has grown to include a wide variety of styles, options and accessories and is often the most economical solution to any interconnect problem. Ideally suited for both commercial/industrial applications and military/aerospace applications, ITT Cannon D Subminiature connectors have found worldwide acceptance in a multitude of applications ranging from office equipment to satellites.

Contents Page


General Application D Subminiature Connectors

- Straight PCB Selection Guide . . . 2
  - D*NG Pressfit Termination . . . 4
  - D*M Solder Termination (Machined) — Standard PC Tails . . . 6
  - ZD* Solder Termination (Stamped) . . . 8
  - D* Solder Termination (Machined) — European PC Tails . . . 10
  - D* Wrap Post Termination . . . 12
- 90° PCB Selection Guide . . . 14
  - D*M Solder Termination (Machined) — Standard Footprint .318♦ or .283♦♦ inch . . . 16
  - ZED* Solder Termination (Stamped) — Standard Footprint .318 inch . . . 18
  - D* Solder Termination (Machined) — European Footprint 10,2♦ or 9,4♦♦ mm . . . 20
  - ZD* Solder Termination (Stamped) — European Footprint 10,2 mm . . . 28
- Cable Selection Guide . . . 30
  - D Solder Cup Solder Termination (Machined) with Tin Shells . . . 32
  - ZD* Solder Cup Solder Termination (Stamped) with Tin Shells . . . 34
  - D*A Crimp Connectors without Contacts . . . 36
  - D*W Discrete Wire IDC . . . 38

Special Application D Subminiature Connectors

- Combo D® Selection Index . . . 42
  - Combo D® PCB Connectors with 75 Ohm Coaxial Contacts (50 Ohm Option) . . . 44
  - Combo D® PCB Connectors with High Power . . . 60
  - Combo D® PCB Connectors with (Size 20) Signal Contacts Only . . . 74
  - Combo D® Cable Solder Cup . . . 78
  - Combo D® Cable Crimp Connectors and Shield Cans . . . 80
  - Loose Contacts and Tooling . . . 83
- Commercial Micro D Selection Index . . . 96
  - MDSM Connectors and Tooling . . . 98
- Filter D Selection Index . . . 104
  - Product Performance . . . 106
  - D*JK PCB Connectors . . . 108
  - D*JT Solder Cup and Combo High Power Connectors . . . 122

High Reliability D Subminiature Connectors

- Military/High Reliability Selection Index . . . 130
  - PCB 90°, Straight, Wrap Post, and Cable Solder Cup . . . 132
  - 24308-Style Cross References and Test Data . . . 1 4 2
  - Military/High Reliability Combo D® . . . 146
- SNASA/GSFC & ESA-SCC Cross References . . . 195

Accessories Selection Guide . . . 198
- Backshells . . . 200
- Locking Hardware . . . 208
- Miscellaneous . . . 214

Reader's Resource Selection Index . . . 219
- Dimensional Reference Data . . . 220
- Lease Tooling . . . 275
- Glossary of Terms . . . 276
- Obsolete Products/Available Products Not Previously Listed . . . 282
- Part Number Index . . . 283
- Product Safety and Warranty . . . 297


On the Cover ◄
*Filter D, Combo D®, Commercial Micro D (MDSM), Pressfit D, and Standard D*

Our facility is not currently certified by the DLA and this product is not covered by the QPL/QML.

Combo D® is a registered trademark of ITT Cannon in the United States.
♦ Connector footprint measured from the front shell.
♦♦ Connector footprint measured from the rear shell.

## D*NG - Straight Pressfit Termination

See pages 4-5.

The D*NG is based upon the specification CECC75-301-802. These connectors provide a low-cost alternative to traditional through hole solder contacts. Utilizing stamped ''Eye of the Needle'' compliant contact tails per IEC-352-5, the parts are quickly and easily mounted onto PCBs without soldering, crimping or specialized tooling. The socket contact engaging area utilizes a ''spoon'' shape with four points of interconnection. Hardware options provide flexibility and ensure that the final product fits the electrical requirements of any application.

### Product Features

Quick and easy press-in installation without specialized tooling
''Spoon'' socket contact provides improved interface compared to ''Tuning Fork''
Closed-entry socket for secure blind mating
Front-shell only design based on CECC 75-301-802
''Eye of the Needle'' compliant contact tails
Press-in bolt for ground continuity
#4-40 UNC and M3 hardware options

## D*M Straight Solder Termination (Machined) — Standard PC Tails

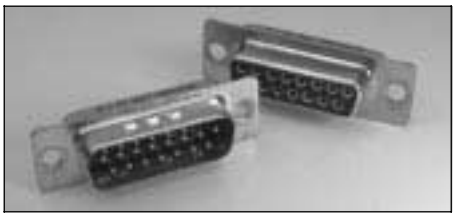

See pages 6-7.

D*M straight PCB connectors, which are designed to be equivalent to MIL-C-24308 (except for finishes) for printed circuit boards and backplanes in demanding applications. Additional contact lengths, hardware and finish options available; consult factory for details.

### Product Features

7.5 A current capacity
Machined contacts
2 contact finishes
Optional vertical standoffs, screw locks, and boardlocks (4 prongs)
UL file number E8572
Dimensionally compatible with Combo D®

## ZD* - Straight Solder Termination (Stamped)

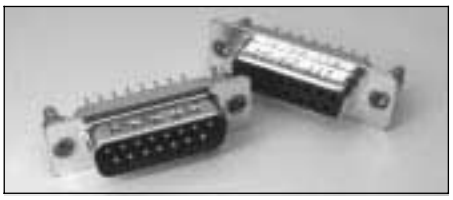

See pages 8-9.

ZD* straight connectors are available for applications where price is the primary driver. They are available with or without boardlocks and screw locks.

### Product Features

Stamped contacts with 5 A current capacity
Economical
Optional vertical standoffs with optional harpoon style boardlocks or screw locks

## D* - Straight Solder Termination (Machined) — European PC Tails

See pages 10-11.

D* straight connectors are available for high performance uses according to DIN 41652. Available with European length OL contacts.

Select contact finish from 2 performance classes.

### Product Features

High performance commercial connectors
Two contact finish performance classes
Optional vertical standoffs, threaded inserts and pushfits/boardlocks
OL2 contact length, other lengths available
Tin plated contact PC tails (pin & socket)
Machined contacts

## D* - Wrap Post Termination

See pages 12-13.

D* straight connectors are available for high performance uses according to DIN 41652. Contacts available in two popular lengths.

### Product Features

High performance commercial class connectors
Two contact lengths for 2 or 3 wraps
Machined contacts



ITT Cannon

Dimensions are shown in mm (inch)
Dimensions subject to change

## Specifications

| | |
|---|---|
| Current Rating | 5 A / 25°C, 3.5 A / 70°C ambient |
| Temperature Rating | −55°C to 125°C |
| Contact Resistance | 10 mΩ |
| Test Voltage | 1200 Vrms at Sea Level |
| ∅ Plated Through Hole | 1,09 - 0,94 (.043 - .037) |
| PC Tail Press-in Force | 100N/contact max. |
| PC Tail Push-out Force | 30N/contact min. |
| PC Board Thickness | 3,20 - 1,60 (.125 - .062) |

## Materials and Finishes

| Description | Material | Finish |
|---|---|---|
| Shell | Steel | Tin |
| Insulator | Thermoplastic, UL 94V-0 | None (color: black) |
| Contact | Copper Alloy | Gold over Nickel (Standard) or Gold over PdNi (-408) |
| Hardware | Steel/Copper Alloy | Tin/Zinc |

## Specifications

| | |
|---|---|
| Temperature Rating | −55°C to 125°C |
| Current Rating | 7.5 A |
| Contact Resistance | 55 millivolt max at 7.5 A test current |
| Dielectric Withstanding Voltage | 1000 VAC at Sea Level |

## Materials and Finishes

| Description | Material | Finish |
|---|---|---|
| Shell | Steel | Tin |
| Insulator | Thermoplastic, UL 94V-0 | None (color: dark green) |
| Contact | Copper Alloy | Gold over Nickel. Terminating end Tin (Socket only) |
| Hardware | Steel/Copper Alloy | Tin/Zinc |

## Specifications

| | |
|---|---|
| Temperature Rating | −55°C to 105°C |
| Current Rating | 5 A |
| Contact Resistance | 15 mΩ |
| Dielectric Withstanding Voltage | 1000 VAC at Sea Level |

## Materials and Finishes

| Description | Material | Finish |
|---|---|---|
| Shell | Steel | Tin |
| Insulator | Thermoplastic, UL 94-0 | None (color: black) |
| Contacts | Copper Alloy | Gold over Nickel |
| Hardware | Steel/Copper Alloy | Tin/Zinc |

## Specifications

| | |
|---|---|
| Temperature Rating | −55°C to 125°C |
| Current Rating | 5 A |
| Contact Resistance | 10 mΩ |
| Dielectric Withstanding Voltage | 1250 VAC at Sea Level |

## Materials and Finishes

| Description | Material | Finish |
|---|---|---|
| Shell | Steel | Tin |
| Insulator | Thermoplastic, UL 94V-0 | None (color: dark green) |
| Contacts | Copper Alloy | Gold over Nickel in mating area, Tin on balance |
| Hardware | Steel/Copper Alloy | Tin/Zinc |

## Specifications

| | |
|---|---|
| Temperature Rating | −55°C to 125°C |
| Current Rating | 5 A |
| Contact Resistance | 10 mΩ |
| Dielectric Withstanding Voltage | 1250 VAC at Sea Level |

## Materials and Finishes

| Description | Material | Finish |
|---|---|---|
| Shell | Steel | Tin |
| Insulator | Thermoplastic, UL 94V-0 | None (color: dark green) |
| Contact | Socket: Copper Alloy | Gold over Nickel. Terminating end Tin (Socket) |
| Hardware | Steel/Copper Alloy | Tin/Zinc |

## Straight Pressfit Termination

Plug

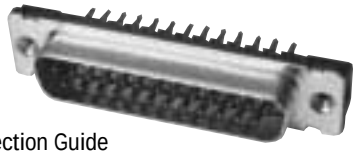

Selection Guide
For Product Features, Specifications, Materials and Finishes, see pages 2-3.

Reader's Resource
For contact cavity arrangements, see page 224.
For P.C. hole patterns, see page 274.
For panel cutouts, see page 221.

Part Numbers

| Shell Size | Layout | Through Hole | Clinch Nut # 4-40 UNC | Clinch Nut M3 | Press-In Bolt # 4-40 UNC | Press-In Bolt M3 |
|---|---|---|---|---|---|---|
| DE | 9 | DENG9P-P1 | DENGE9P-P1 | DENGX9P-P1 | DENGZ9P-P1 | DENGL9P-P1 |
| DA | 15 | DANG15P-P1 | DANGE15P-P1 | DANGX15P-P1 | DANGZ15P-P1 | DANGL15P-P1 |
| DB | 25 | DBNG25P-P1 | DBNGE25P-P1 | DBNGX25P-P1 | DBNGZ25P-P1 | DBNGL25P-P1 |
| DC | 37 | DCNG37P-P1 | DCNGE37P-P1 | DCNGX37P-P1 | DCNGZ37P-P1 | DCNGL37P-P1 |
| DD | 50 | DDNG50P-P1 | DDNGE50P-P1 | DDNGX50P-P1 | DDNGZ50P-P1 | DDNGL50P-P1 |

Note: For performance class 1 (gold over PdNi finish) add -408. Example: DENG9P-P1-408.

Engaging Face

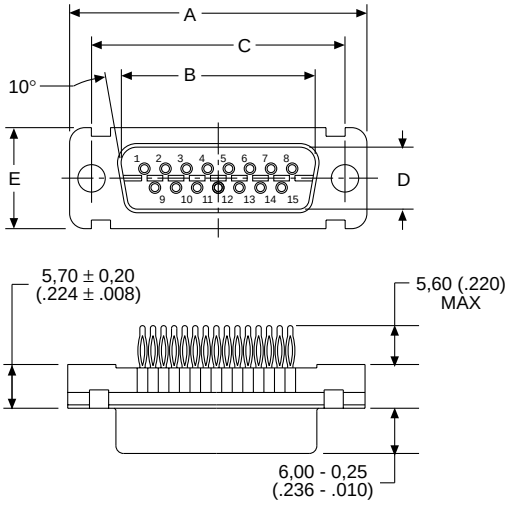


DD Configuration

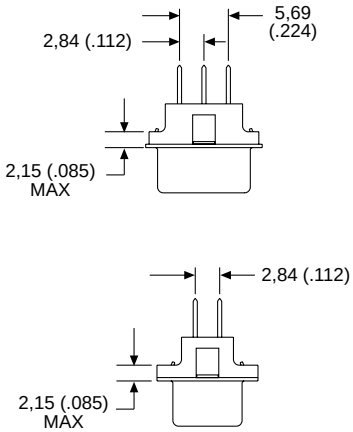


Dimensions

| Shell Size | A ±0,38 (.015) | B ±0,13 (.005) | C ±0,13 (.005) | D ±0,13 (.005) | E ±0,38 (.015) |
|---|---|---|---|---|---|
| DE | 30,81 (1.213) | 16,92 (.666) | 24,99 (.984) | 8,36 (.329) | 12,55 (.494) |
| DA | 39,14 (1.541) | 25,25 (.994) | 33,32 (1.312) | 8,36 (.329) | 12,55 (.494) |
| DB | 53,04 (2.088) | 38,96 (1.534) | 47,04 (1.852) | 8,36 (.329) | 12,55 (.494) |
| DC | 69,32 (2.729) | 55,42 (2.182) | 63,50 (2.500) | 8,36 (.329) | 12,55 (.494) |
| DD | 66,93 (2.635) | 52,81 (2.079) | 61,11 (2.406) | 11,07 (.436) | 15,37 (.605) |

Mounting Types

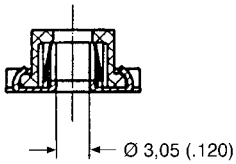


Through Hole

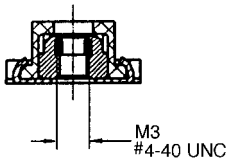


Clinch Nut

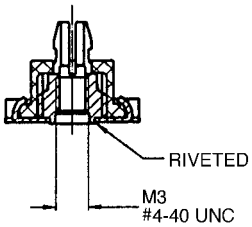


Press-In Bolt



ITT Cannon

Dimensions are shown in mm (inch)
Dimensions subject to change

## Straight Pressfit Termination

Receptacle

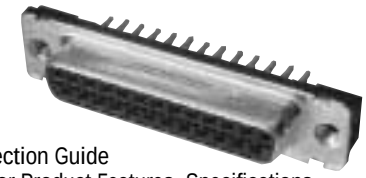

Selection Guide
For Product Features, Specifications, Materials and Finishes, see pages 2-3.

Reader's Resource
For contact cavity arrangements, see page 224.
For P.C. hole patterns, see page 274.
For panel cutouts, see page 221.

Part Numbers

| Shell Size | Layout | Through Hole | Clinch Nut # 4-40 UNC | Clinch Nut M3 | Press-In Bolt # 4-40 UNC | Press-In Bolt M3 |
|---|---|---|---|---|---|---|
| DE | 9 | DENG9S-P1 | DENGE9S-P1 | DENGX9S-P1 | DENGZ9S-P1 | DENGL9S-P1 |
| DA | 15 | DANG15S-P1 | DANGE15S-P1 | DANGX15S-P1 | DANGZ15S-P1 | DANGL15S-P1 |
| DB | 25 | DBNG25S-P1 | DBNGE25S-P1 | DBNGX25S-P1 | DBNGZ25S-P1 | DBNGL25S-P1 |
| DC | 37 | DCNG37S-P1 | DCNGE37S-P1 | DCNGX37S-P1 | DCNGZ37S-P1 | DCNGL37S-P1 |
| DD | 50 | DDNG50S-P1 | DDNGE50S-P1 | DDNGX50S-P1 | DDNGZ50S-P1 | DDNGL50S-P1 |

Note: For performance class 1 (gold over PdNi finish) add -408. Example: DENG9S-P1-408.

Engaging Face

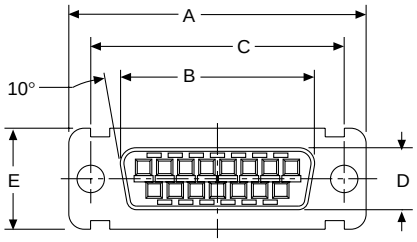


DD Configuration

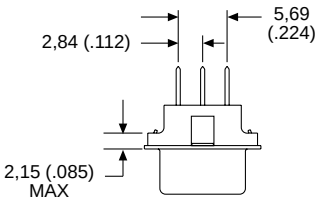


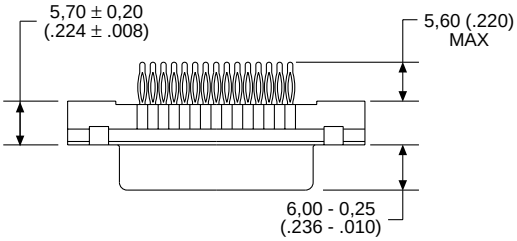


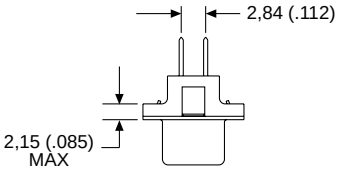


Dimensions

| Shell Size | A ±0,38 (.015) | B ±0,13 (.005) | C ±0,13 (.005) | D ±0,13 (.005) | E ±0,38 (.015) |
|---|---|---|---|---|---|
| DE | 30,81 (1.213) | 16,33 (.643) | 24,99 (.984) | 7,90 (.311) | 12,55 (.494) |
| DA | 39,14 (1.541) | 24,66 (.971) | 33,32 (1.312) | 7,90 (.311) | 12,55 (.494) |
| DB | 53,04 (2.088) | 38,38 (1.511) | 47,04 (1.852) | 7,90 (.311) | 12,55 (.494) |
| DC | 69,32 (2.729) | 54,84 (2.159) | 63,50 (2.500) | 7,90 (.311) | 12,55 (.494) |
| DD | 66,93 (2.635) | 52,42 (2.064) | 61,11 (2.406) | 10,74 (.423) | 15,37 (.605) |

Mounting Types

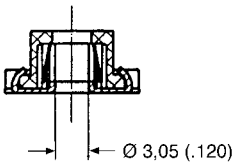


Through Hole

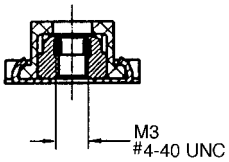


Clinch Nut

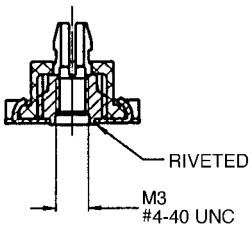


Press-In Bolt

## Straight Solder Termination (Machined) — Standard PC Tails

Plug

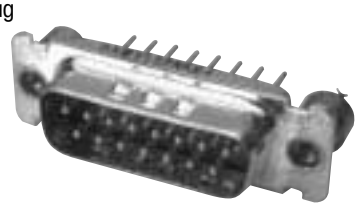

Selection Guide
For Product Features, Specifications, Materials and Finishes, see pages 2-3.

Reader's Resource
For contact cavity arrangements, see page 224.
For P.C. hole patterns, see page 274.
For panel cutouts, see page 221.
For hardware views (Standard), see page 226.

Part Numbers

| Shell Size | Layout | Standoff | Standoff & Boardlock | Standoff, Boardlock & Screw Lock |
|---|---|---|---|---|
| DE | 9 | DEMV9PNK87 | DEMZ9PNK87 | DEMN9PNK87 |
| DA | 15 | DAMV15PNK87 | DAMZ15PNK87 | DAMN15PNK87 |
| DB | 25 | DBMV25PNK87 | DBMZ25PNK87 | DBMN25PNK87 |
| DC | 37 | DCMV37PNK87 | DCMZ37PNK87 | DCMN37PNK87 |
| DD | 50 | DDMV50PNK87 | DDMZ50PNK87 | DDMN50PNK87 |

Note: For contacts with 30 microinches gold substitute K127 for K87. Example: DEMN9PNK127

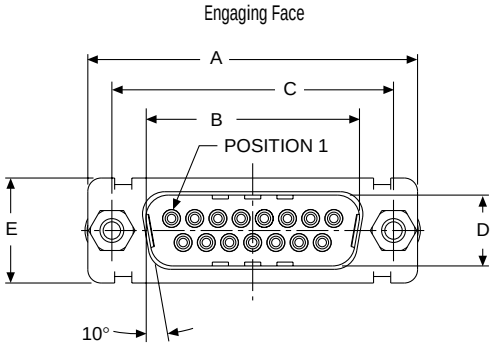


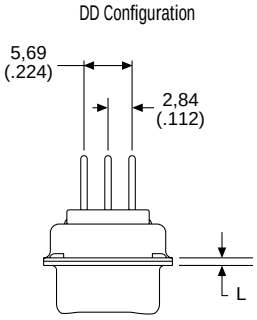


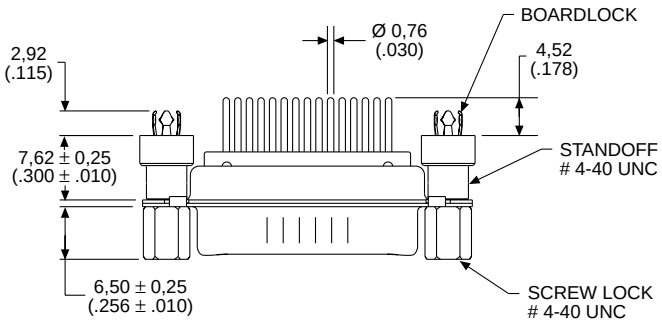


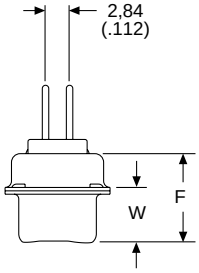


Dimensions

| Shell Size | A ±0,38 (.015) | B ±0,13 (.005) | C ±0,13 (.005) | D ±0,13 (.005) | E ±0,38 (.015) | F ±0,25 (.010) | W ±0,368 (.0145) | W ±0,41 (.016) | L ±0,25 (.010) |
|---|---|---|---|---|---|---|---|---|---|
| DE | 30,81 (1.213) | 16,92 (.666) | 24,99 (.984) | 8,36 (.329) | 12,55 (.494) | 10,72 (.422) | 6,693 (.2635) | — | 0,76 (.030) |
| DA | 39,14 (1.541) | 25,25 (.994) | 33,32 (1.312) | 8,36 (.329) | 12,55 (.494) | 10,72 (.422) | 6,693 (.2635) | — | 0,76 (.030) |
| DB | 53,04 (2.088) | 38,96 (1.534) | 47,04 (1.852) | 8,36 (.329) | 12,55 (.494) | 10,82 (.426) | — | 6,84 (.269) | 0,99 (.039) |
| DC | 69,32 (2.729) | 55,42 (2.182) | 63,50 (2.500) | 8,36 (.329) | 12,55 (.494) | 10,82 (.426) | — | 6,84 (.269) | 0,99 (.039) |
| DD | 66,93 (2.635) | 52,81 (2.079) | 61,11 (2.406) | 11,07 (.436) | 15,37 (.605) | 10,82 (.426) | — | 6,84 (.269) | 0,99 (.039) |



Dimensions are shown in mm (inch)
Dimensions subject to change

## Straight Solder Termination (Machined) — Standard PC Tails

**Receptacle**

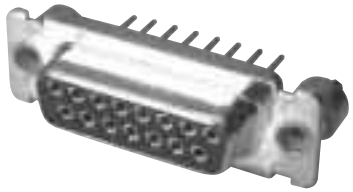

**Selection Guide**

For Product Features, Specifications, Materials and Finishes, see pages 2-3.

**Reader's Resource**

For contact cavity arrangements, see page 224.
For P.C. hole patterns, see page 274.
For panel cutouts, see page 221.
For hardware views (Standard), see page 226.

**Part Numbers**

| Shell Size | Layout | Standoff | Standoff & Boardlock | Standoff, Boardlock & Screw Lock |
|---|---|---|---|---|
| DE | 9 | DEMV9SNA197 | DEMZ9SNA197 | DEMN9SNA197 |
| DA | 15 | DAMV15SNA197 | DAMZ15SNA197 | DAMN15SNA197 |
| DB | 25 | DBMV25SNA197 | DBMZ25SNA197 | DBMN25SNA197 |
| DC | 37 | DCMV37SNA197 | DCMZ37SNA197 | DCMN37SNA197 |
| DD | 50 | DDMV50SNA197 | DDMZ50SNA197 | DDMN50SNA197 |

Note: For contacts with 30 microinches gold substitute K126 for A197. Example: DEMN9SNK126

**Engaging Face**

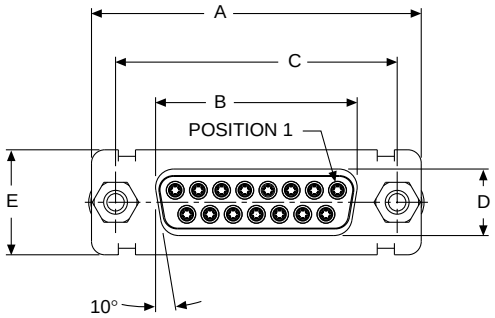


**DD Configuration**

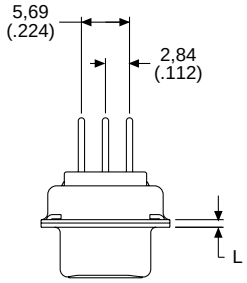


**Hardware removed for clarity**

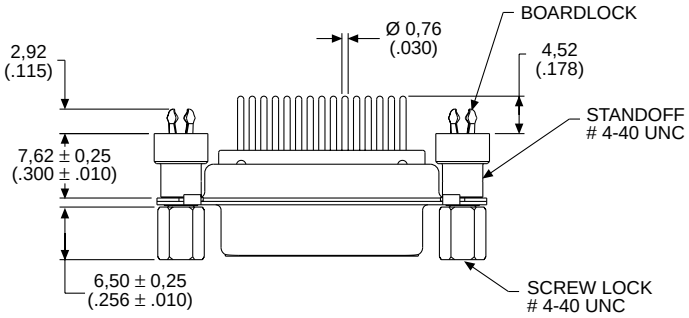


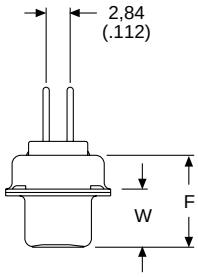


**Hardware removed for clarity**

**Dimensions**

| Shell Size | A ±0,38 (.015) | B ±0,13 (.005) | C ±0,13 (.005) | D ±0,13 (.005) | E ±0,38 (.015) | F ±0,25 (.010) | W ±0,38 (.015) | L ±0,25 (.010) |
|---|---|---|---|---|---|---|---|---|
| DE | 30,81 (1.213) | 16,33 (.643) | 24,99 (.984) | 7,90 (.311) | 12,55 (.494) | 10,90 (.429) | 6,94 (.273) | 0,76 (.030) |
| DA | 39,14 (1.541) | 24,66 (.971) | 33,32 (1.312) | 7,90 (.311) | 12,55 (.494) | 10,90 (.429) | 6,94 (.273) | 0,76 (.030) |
| DB | 53,04 (2.088) | 38,38 (1.511) | 47,04 (1.852) | 7,90 (.311) | 12,55 (.494) | 10,90 (.429) | 6,94 (.273) | 0,76 (.030) |
| DC | 69,32 (2.729) | 54,84 (2.159) | 63,50 (2.500) | 7,90 (.311) | 12,55 (.494) | 10,90 (.429) | 6,94 (.273) | 0,76 (.030) |
| DD | 66,93 (2.635) | 52,42 (2.064) | 61,11 (2.406) | 10,74 (.423) | 15,37 (.605) | 10,90 (.429) | 6,94 (.273) | 0,76 (.030) |

## Straight Solder Termination (Stamped)

Plug

Part Numbers

| Shell Size | Layout | Through Hole | Standoff With Boardlock |
|---|---|---|---|
| DE | 9 | ZDE9P-OL2 | ZDEE9P-OL2-146 |
| DA | 15 | ZDA15P-OL2 | ZDAE15P-OL2-146 |
| DB | 25 | ZDB25P-OL2 | ZDBE25P-OL2-146 |
| DC | 37 | ZDC37P-OL2 | ZDCE37P-OL2-146 |
| DD | 50 | ZDD50P-OL2 | ZDDE50P-OL2-146 |

Selection Guide
For Product Features, Specifications, Materials and Finishes, see pages 2-3.

Reader's Resource
For contact cavity arrangements, see page 224.
For P.C. hole patterns, see page 274.
For panel cutouts, see page 221.
For hardware views (Standard), see page 226.

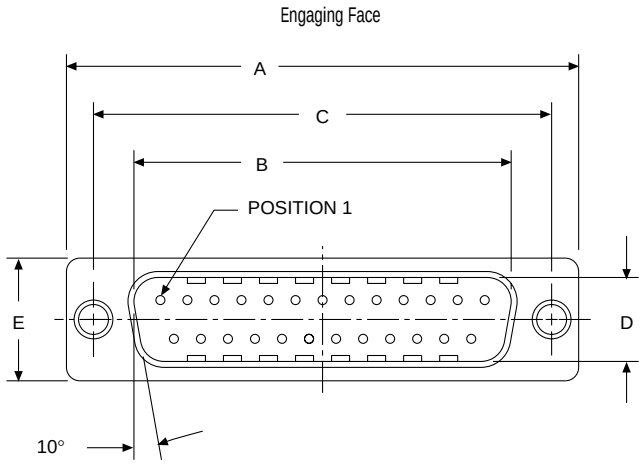


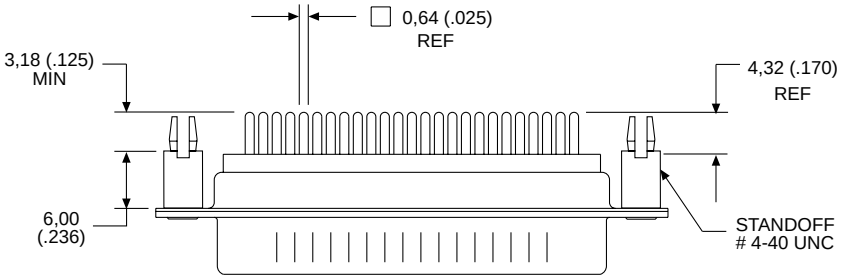


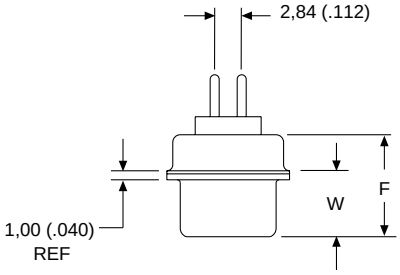


Hardware removed for clarity

Dimensions

| Shell Size | A ±0,38 (.015) | B ±0,13 (.005) | C ±0,13 (.005) | D ±0,13 (.005) | E ±0,38 (.015) | F ±0,25 (.010) | W ±0,368 (.0145) | W ±0,41 (.016) |
|---|---|---|---|---|---|---|---|---|
| DE | 30,81 (1.213) | 16,92 (.666) | 24,99 (.984) | 8,36 (.329) | 12,55 (.494) | 10,72 (.422) | 6,693 (.2635) | — |
| DA | 39,14 (1.541) | 25,25 (.994) | 33,32 (1.312) | 8,36 (.329) | 12,55 (.494) | 10,72 (.422) | 6,693 (.2635) | — |
| DB | 53,04 (2.088) | 38,96 (1.534) | 47,04 (1.852) | 8,36 (.329) | 12,55 (.494) | 10,82 (.426) | — | 6,84 (.269) |
| DC | 69,32 (2.729) | 55,42 (2.182) | 63,50 (2.500) | 8,36 (.329) | 12,55 (.494) | 10,82 (.426) | — | 6,84 (.269) |
| DD | 66,93 (2.635) | 52,81 (2.079) | 61,11 (2.406) | 11,07 (.436) | 15,37 (.605) | 10,82 (.426) | — | 6,84 (.269) |



Dimensions are shown in mm (inch)
Dimensions subject to change

## Straight Solder Termination (Stamped)

Receptacle

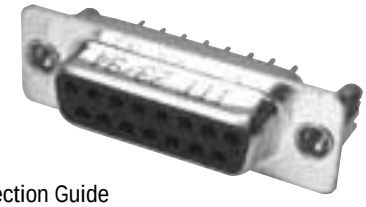

Selection Guide
For Product Features, Specifications, Materials and Finishes, see pages 2-3.

Reader's Resource
For contact cavity arrangements, see page 224.
For P.C. hole patterns, see page 274.
For panel cutouts, see page 221.
For hardware views (Standard), see page 226.

Part Numbers

| Shell Size | Layout | Through Hole | Standoff With Boardlock |
|---|---|---|---|
| DE | 9 | ZDE9S-OL2 | ZDEE9S-OL2-146 |
| DA | 15 | ZDA15S-OL2 | ZDAE15S-OL2-146 |
| DB | 25 | ZDB25S-OL2 | ZDBE25S-OL2-146 |
| DC | 37 | ZDC37S-OL2 | ZDCE37S-OL2-146 |
| DD | 50 | ZDD50S-OL2 | ZDDE50S-OL2-146 |

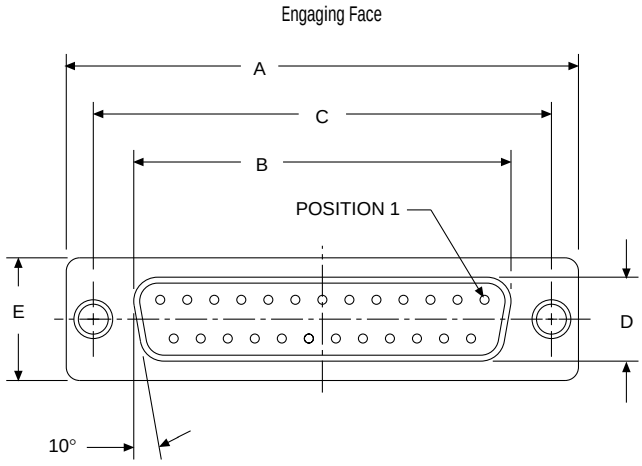


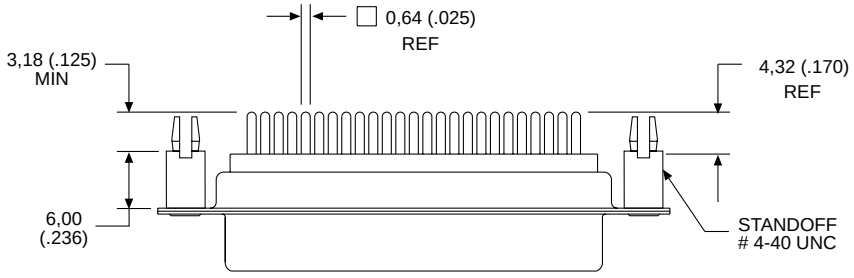


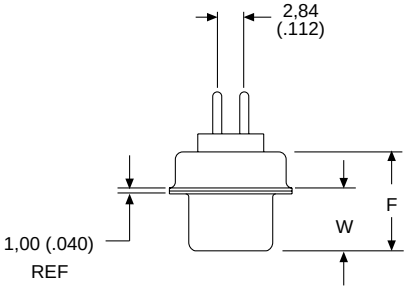


Hardware removed for clarity

Dimensions

| Shell Size | A ±0,38 (.015) | B ±0,13 (.005) | C ±0,13 (.005) | D ±0,13 (.005) | E ±0,38 (.015) | F ±0,25 (.010) | W ±0,38 (.015) |
|---|---|---|---|---|---|---|---|
| DE | 30,81 (1.213) | 16,33 (.643) | 24,99 (.984) | 7,90 (.311) | 12,55 (.494) | 10,90 (.429) | 6,94 (.273) |
| DA | 39,14 (1.541) | 24,66 (.971) | 33,32 (1.312) | 7,90 (.311) | 12,55 (.494) | 10,90 (.429) | 6,94 (.273) |
| DB | 53,04 (2.088) | 38,38 (1.511) | 47,04 (1.852) | 7,90 (.311) | 12,55 (.494) | 10,90 (.429) | 6,94 (.273) |
| DC | 69,32 (2.729) | 54,84 (2.159) | 63,50 (2.500) | 7,90 (.311) | 12,55 (.494) | 10,90 (.429) | 6,94 (.273) |
| DD | 66,93 (2.635) | 52,42 (2,064) | 61,11 (2.406) | 10,74 (.423) | 15,37 (.605) | 10,90 (.429) | 6,94 (.273) |

## Straight Solder Termination (Machined) — European PC Tails

Plug

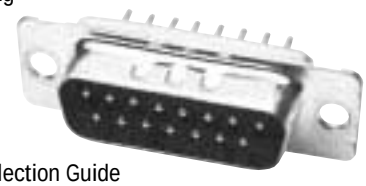

Selection Guide
For Product Features, Specifications, Materials and Finishes, see pages 2-3.

Reader's Resource
For contact cavity arrangements, see page 224.
For P.C. hole patterns, see page 274.
For panel cutouts, see page 221.
For hardware views (European), see page 227.

Part Numbers

| Shell Size | Layout | Through Hole | Standoff #4-40 UNC With Pushfit/Boardlock | Standoff M3 With Pushfit/Boardlock |
|---|---|---|---|---|
| DE | 9 | DE9P-0L2-K87 | DEE9P-0L2-K87-146 | DEX9P-0L2-K87-146 |
| DA | 15 | DA15P-0L2-K87 | DAE15P-0L2-K87-146 | DAX15P-0L2-K87-146 |
| DB | 25 | DB25P-0L2-K87 | DBE25P-0L2-K87-146 | DBX25P-0L2-K87-146 |
| DC | 37 | DC37P-0L2-K87 | DCE37P-0L2-K87-146 | DCX37P-0L2-K87-146 |
| DD | 50 | DD50P-0L2-K87 | DDE50P-0L2-K87-146 | DDX50P-0L2-K87-146 |

Note: For performance class 2 add -A191. Example DA15P-OL2-A191-K87.

| PC Tail Modifier | X ±0,30 (.012) | Y ±0,30 (.012) |
|---|---|---|
| OL2 | 5,20 (.205) | 10,20 (.401) |
| OL4 | 6,75 (.266) | 11,80 (.465) |

Engaging Face

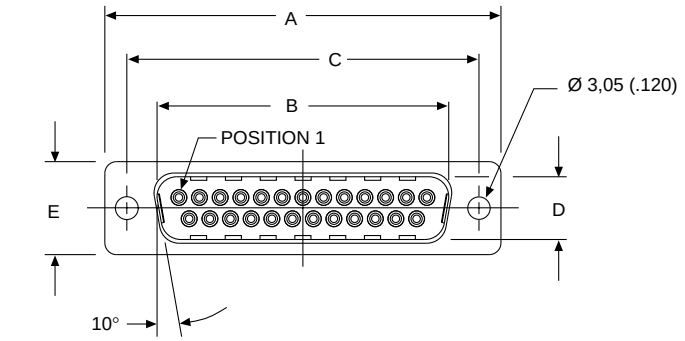


DD Configuration

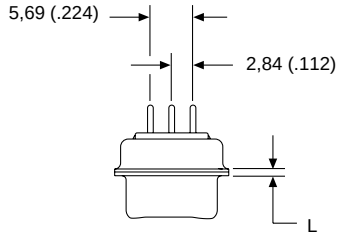


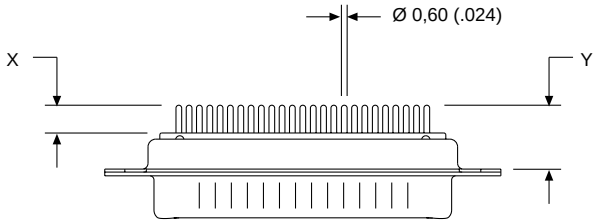


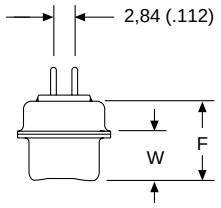


Dimensions

| Shell Size | A ±0,38 (.015) | B ±0,13 (.005) | C ±0,13 (.005) | D ±0,13 (.005) | E ±0,38 (.015) | F ±0.25 (.010) | W ±0,368 (.0145) | W ±0,41 (.016) | L ±0,25 (.010) |
|---|---|---|---|---|---|---|---|---|---|
| DE | 30,81 (1.213) | 16,92 (.666) | 24,99 (.984) | 8,36 (.329) | 12,55 (.494) | 10,72 (.422) | 6,693 (.2635) | — | 0,76 (.030) |
| DA | 39,14 (1.541) | 25,25 (.994) | 33,32 (1.312) | 8,36 (.329) | 12,55 (.494) | 10,72 (.422) | 6,693 (.2635) | — | 0,76 (.030) |
| DB | 53,04 (2.088) | 38,96 (1.534) | 47,04 (1.852) | 8,36 (.329) | 12,55 (.494) | 10,82 (.426) | — | 6,84 (.269) | 0,99 (.039) |
| DC | 69,32 (2.729) | 55,42 (2.182) | 63,50 (2.500) | 8,36 (.329) | 12,55 (.494) | 10,82 (.426) | — | 6,84 (.269) | 0,99 (.039) |
| DD | 66,93 (2.635) | 52,81 (2.079) | 61,11 (2.406) | 11,07 (.436) | 15,37 (.605) | 10,82 (.426) | — | 6,84 (.269) | 0,99 (.039) |



Dimensions are shown in mm (inch)
Dimensions subject to change

## Straight Solder Termination (Machined) — European PC Tails

Receptacle

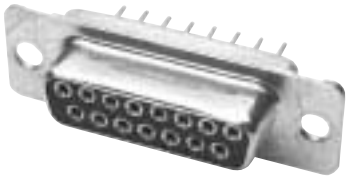

Selection Guide
For Product Features, Specifications, Materials and Finishes, see pages 2-3.

Reader's Resource
For contact cavity arrangements, see page 224.
For P.C. hole patterns, see page 274.
For panel cutouts, see page 221.
For hardware views (European), see page 227.

Part Numbers

| Shell Size | Layout | Through Hole | Standoff #4-40 UNC With Pushfit/Boardlock | Standoff M3 With Pushfit/Boardlock |
|---|---|---|---|---|
| DE | 9 | DE9S-0L2-A197 | DEE9S-0L2-A197-146 | DEX9S-0L2-A197-146 |
| DA | 15 | DA15S-0L2-A197 | DAE15S-0L2-A197-146 | DAX15S-0L2-A197-146 |
| DB | 25 | DB25S-0L2-A197 | DBE25S-0L2-A197-146 | DBX25S-0L2-A197-146 |
| DC | 37 | DC37S-0L2-A197 | DCE37S-0L2-A197-146 | DCX37S-0L2-A197-146 |
| DD | 50 | DD50S-0L2-A197 | DDE50S-0L2-A197-146 | DDX50S-0L2-A197-146 |

Note: For performance class 2 add -A191. Example DA15S-0L2-A191-A197

| PC Tail Modifier | X ±0,30 (.012) | Y ±0,30 (.012) |
|---|---|---|
| 0L2 | 5,20 (.205) | 10,20 (.401) |
| 0L4 | 6,75 (.266) | 11,80 (.465) |

Engaging Face

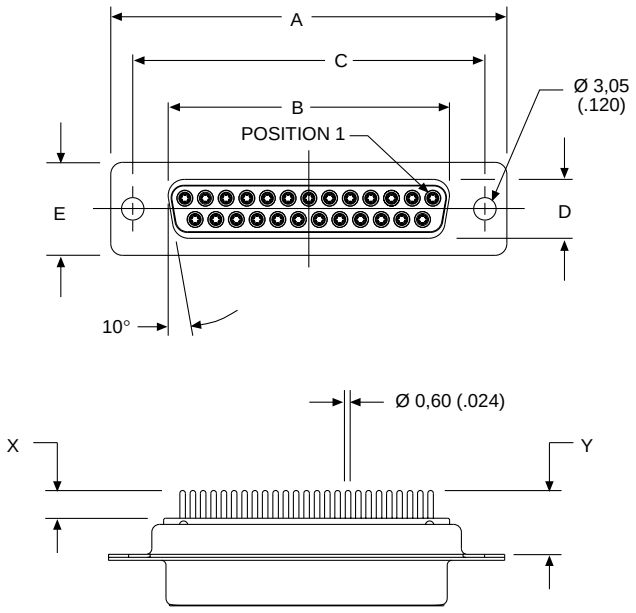


DD Configuration

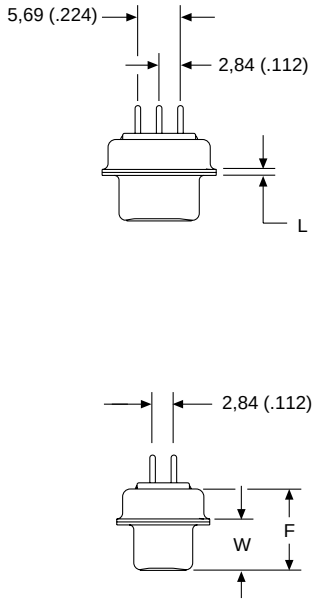


Dimensions

| Shell Size | A ±0,38 (.015) | B ±0,13 (.005) | C ±0,13 (.005) | D ±0,13 (.005) | E ±0,38 (.015) | F ±0,25 (.010) | W ±0,38 (.015) | L ±0,25 (.010) |
|---|---|---|---|---|---|---|---|---|
| DE | 30,81 (1.213) | 16,33 (.643) | 24,99 (.984) | 7,90 (.311) | 12,55 (.494) | 10,90 (.429) | 6,94 (.273) | 0,76 (.030) |
| DA | 39,14 (1.541) | 24,66 (.971) | 33,32 (1.312) | 7,90 (.311) | 12,55 (.494) | 10,90 (.429) | 6,94 (.273) | 0,76 (.030) |
| DB | 53,04 (2.088) | 38,38 (1.511) | 47,04 (1.852) | 7,90 (.311) | 12,55 (.494) | 10,90 (.429) | 6,94 (.273) | 0,76 (.030) |
| DC | 69,32 (2.729) | 54,84 (2.159) | 63,50 (2.500) | 7,90 (.311) | 12,55 (.494) | 10,90 (.429) | 6,94 (.273) | 0,76 (.030) |
| DD | 66,93 (2.635) | 52,42 (2.064) | 61,11 (2.406) | 10,74 (.423) | 15,37 (.605) | 10,90 (.429) | 6,94 (.273) | 0,76 (.030) |

## Wrap Post Termination

Plug

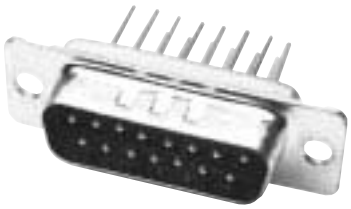

Part Numbers

| Shell Size | Layout | Through Hole |
|---|---|---|
| DE | 9 | DE9P-F179A-K87 |
| DA | 15 | DA15P-F179A-K87 |
| DB | 25 | DB25P-F179A-K87 |
| DC | 37 | DC37P-F179A-K87 |
| DD | 50 | DD50P-F179A-K87 |

| Modification Code | Number of Wraps | X max. | Y ±0,89 (.035) |
|---|---|---|---|
| F179 | 2 | 10,21 (.402) | 15,20 (.598) |
| F179A | 3 | 13,61 (.536) | 18,60 (.732) |

Selection Guide
For Product Features, Specifications, Materials and Finishes, see pages 2-3.

Reader's Resource
For contact cavity arrangements, see page 224.
For P.C. hole patterns, see page 274.
For panel cutouts, see page 221.
For hardware views (Standard), see page 226.

Engaging Face

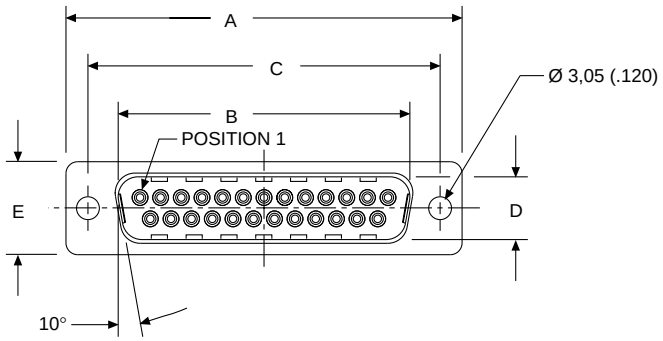


DD Configuration

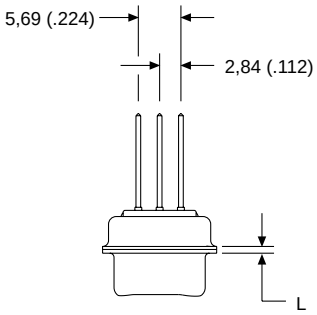


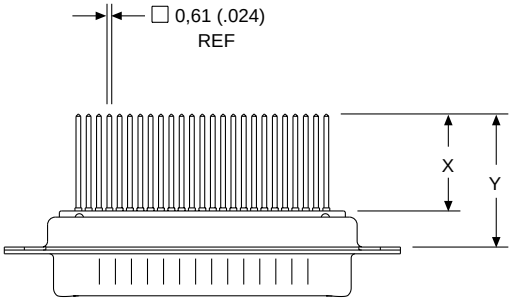


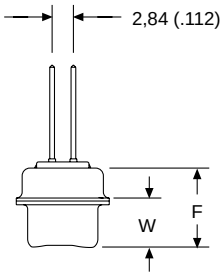


Dimensions

| Shell Size | A ±0,38 (.015) | B ±0,13 (.005) | C ±0,13 (.005) | D ±0,13 (.005) | E ±0,38 (.015) | F ±0,25 (.010) | W ±0,368 (.0145) | W ±0,41 (.016) | L ±0,25 (.010) |
|---|---|---|---|---|---|---|---|---|---|
| DE | 30,81 (1.213) | 16,92 (.666) | 24,99 (.984) | 8,36 (.329) | 12,55 (.494) | 10,72 (.422) | 6,693 (.2635) | — | 0,76 (.030) |
| DA | 39,14 (1.541) | 25,25 (.994) | 33,32 (1.312) | 8,36 (.329) | 12,55 (.494) | 10,72 (.422) | 6,693 (.2635) | — | 0,76 (.030) |
| DB | 53,04 (2.088) | 38,96 (1.534) | 47,04 (1.852) | 8,36 (.329) | 12,55 (.494) | 10,82 (.426) | — | 6,64 (.269) | 0,99 (.039) |
| DC | 69,32 (2.729) | 55,42 (2.182) | 63,50 (2.500) | 8,36 (.329) | 12,55 (.494) | 10,82 (.426) | — | 6,64 (.269) | 0,99 (.039) |
| DD | 66,93 (2.635) | 52,81 (2.079) | 61,11 (2.406) | 11,07 (.436) | 15,37 (.605) | 10,82 (.426) | — | 6,64 (.269) | 0,99 (.039) |



Dimensions are shown in mm (inch)
Dimensions subject to change

## Wrap Post Termination

Receptacle

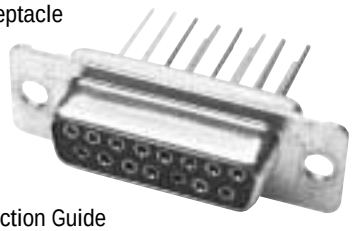

Selection Guide
For Product Features, Specifications, Materials and Finishes, see pages 2-3.

Reader's Resource
For contact cavity arrangements, see page 224.
For P.C. hole patterns, see page 274.
For panel cutouts, see page 221.
For hardware views (Standard), see page 226.

Part Numbers

| Shell Size | Layout | Through Hole |
|---|---|---|
| DE | 9 | DE9S-F179A-A197 |
| DA | 15 | DA15S-F179A-A197 |
| DB | 25 | DB25S-F179A-A197 |
| DC | 37 | DC37S-F179A-A197 |
| DD | 50 | DD50S-F179A-A197 |

| Modification Code | Number of Wraps | X max. | Y ±0,89 (.035) |
|---|---|---|---|
| F179 | 2 | 10,21 (.402) | 15,20 (.598) |
| F179A | 3 | 13,61 (.536) | 18,60 (.732) |

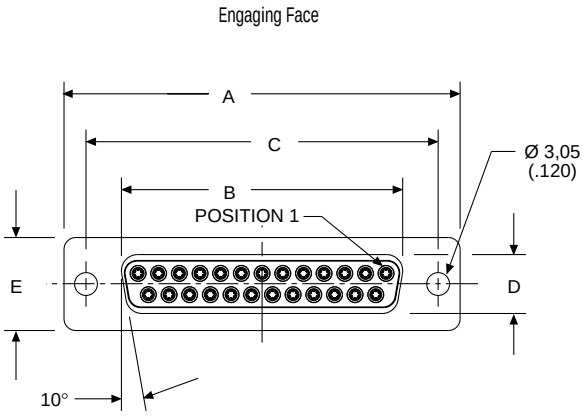


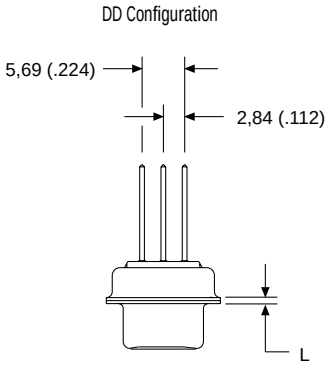


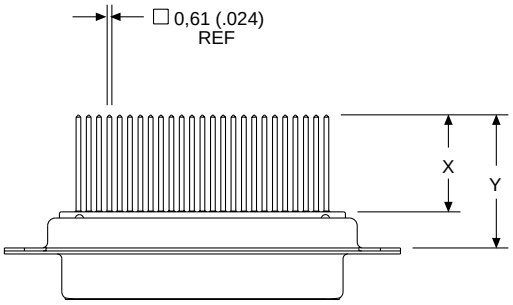


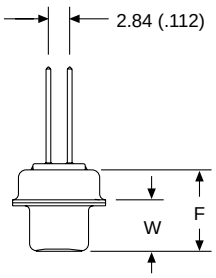


Dimensions

| Shell Size | A ±0,13 (.005) | B ±0,13 (.005) | C ±0,13 (.005) | D ±0,13 (.005) | E ±0,38 (.015) | F ±0,25 (.010) | W ±0,38 (.015) | L ±0,25 (.010) |
|---|---|---|---|---|---|---|---|---|
| DE | 30,81 (1.213) | 16,33 (.643) | 24,99 (.984) | 7,90 (.311) | 12,55 (.494) | 10,90 (.429) | 6,94 (.273) | 0,76 (.030) |
| DA | 39,14 (1.541) | 24,66 (.971) | 33,32 (1.312) | 7,90 (.311) | 12,55 (.494) | 10,90 (.429) | 6,94 (.273) | 0,76 (.030) |
| DB | 53,04 (2.088) | 38,38 (1.511) | 47,04 (1.852) | 7,90 (.311) | 12,55 (.494) | 10,90 (.429) | 6,94 (.273) | 0,76 (.030) |
| DC | 69,32 (2.729) | 54,84 (2.159) | 63,50 (2.500) | 7,90 (.311) | 12,55 (.494) | 10,90 (.429) | 6,94 (.273) | 0,76 (.030) |
| DD | 66,93 (2.635) | 52,42 (2.064) | 61,11 (2.406) | 10,74 (.423) | 15,37 (.605) | 10,90 (.429) | 6,94 (.273) | 0,76 (.030) |

## D*M — 90° Solder Termination (Machined) — Standard Footprint .318♦ or .283 inch♦♦

See pages 16-17.

D*M 90° PCB connectors, designed to be comparable to MIL-C-24308 (except for finishes), for use with printed circuit boards in demanding applications. Additional contact lengths, hardware and finish options available; consult factory for details.

### Product Features

- 7.5 A current capacity
- Machined contacts
- Two contact finishes
- Metal bracket with threaded insert standard
- Optional screw locks and boardlocks
- UL file number E8572
- Dimensionally compatible with Combo D®

## ZED* — 90° Solder Termination (Stamped) — Standard Footprint .318 inch♦

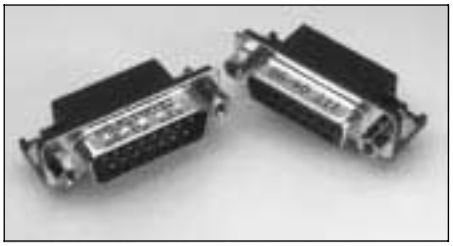

See pages 18-19.

ZED* 90° connectors are available for applications where price is the primary driver. They are available with integrated plastic brackets with Standard footprints.

### Product Features

- Stamped contacts with 5 A current capacity
- Economical
- Plastic bracket with integrated boardlocks and grounding strap
- Optional screw locks

## D* — 90° Solder Termination (Machined) — European Footprint 10,2♦ or 9,4 mm♦♦

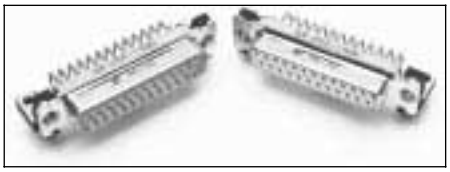

See pages 20-27.

D* 90° connectors are available for high performance uses according to DIN 41652. Available with European footprint 1AON contacts, plastic and metal brackets, #4-40 or M3 threads and stamped pushfits/boardlocks. Contact finish available in 2 performance classes.

### Product Features

- High performance commercial class connectors
- Two contact performance classes
- Optional metal and plastic brackets, threaded standoffs, clinch nuts, and stamped pushfits/boardlocks
- Tin plated contact PC tails (pin & socket)

## ZD* — 90° Solder Termination (Stamped) — European Footprint 10,2 mm♦

See pages 28-29.

ZD* 90° connectors are available for applications where price is the primary driver. They are available with integrated plastic brackets with European footprints.

### Product Features

- Stamped contacts with 5 A current capacity
- Economical
- Plastic bracket with integrated boardlocks and grounding strap
- Optional screw locks

♦ Connector footprint measured from the front shell.
♦♦ Connector footprint measured from the rear shell.



Dimensions are shown in mm (inch)
Dimensions subject to change

## Specifications

| | |
|---|---|
| Temperature Rating | −55°C to 125°C |
| Current Rating | 7.5 A |
| Contact Resistance | 55 millivolt max. at 7.5 A test current |
| Dielectric Withstanding Voltage | 1000 VAC at Sea Level |

## Materials and Finishes

| Description | Material | Finish |
|---|---|---|
| Shell | Steel | Tin |
| Insulator | Thermoplastic, UL 94V-0 | None (Color: dark green) |
| Pin Contact | Copper Alloy | Gold over Nickel |
| Socket Contact | Copper Alloy | Gold over Nickel in mating area, Tin on balance |
| Hardware (except Boardlocks) | Steel | Tin |
| Boardlocks | Copper Alloy | Tin |

## Specifications

| | |
|---|---|
| Temperature Rating | −55°C to 105°C |
| Current Rating | 5 A |
| Contact Resistance | 15 mΩ |
| Dielectric Withstanding Voltage | 1000 VAC at Sea Level |

## Materials and Finishes

| Description | Material | Finish |
|---|---|---|
| Shell | Steel | Tin |
| Insulator | Thermoplastic, UL 94V-0 | None |
| Contacts | Copper Alloy | Gold over Nickel in mating area, Tin on balance |

## Specifications

| | |
|---|---|
| Temperature Rating | −55°C to +125°C |
| Current Rating | 5 A |
| Contact Resistance | 10 mΩ |
| Dielectric Withstanding Voltage | 1250 VAC at Sea Level |

## Materials and Finishes

| Description | Material | Finish |
|---|---|---|
| Shell | Steel | Tin |
| Insulator | Thermoplastic, UL 94V-0 | None (Color: dark green) |
| Contacts | Copper Alloy | Gold over Nickel in mating area, Tin on balance |
| Hardware | Steel or Plastic | Tin or None |
| Boardlocks | Copper Alloy | Tin |

## Specifications

| | |
|---|---|
| Temperature Rating | −55°C to 105°C |
| Current Rating | 5 A |
| Contact Resistance | 15 mΩ |
| Dielectric Withstanding Voltage | 1000 VAC at Sea Level |

## Materials and Finishes

| Description | Material | Finish |
|---|---|---|
| Shell | Steel | Tin |
| Insulator | Thermoplastic, UL 94V-0 | None |
| Contacts | Copper Alloy | Gold over Nickel in mating area, Tin on balance |

## 90° Solder Termination (Machined) — Standard Footprint .318♦ or .283 inch♦♦

Plug

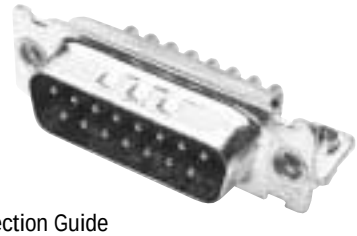

Selection Guide
For Product Features, Specifications, Materials and Finishes, see pages 14-15.

Reader's Resource
For contact cavity arrangements, see page 224.
For P.C. hole patterns, see page 272.
For panel cutouts, see page 221.
For hardware views (Standard), see page 226.
For alternate bracket configuration (when connectors are supplied without boardlocks), see page 226.

Part Numbers

| Shell Size | Layout | Bracket | Bracket & Boardlock | Bracket & Screw Lock #4-40 UNC | Bracket, Boardlock & Screw Lock #4-40 UNC |
|---|---|---|---|---|---|
| DE | 9 | DEMP9PJK87 | DEMCP9PJK87 | DEMD9PJK87 | DEMG9PJK87 |
| DA | 15 | DAMP15PJK87 | DAMC15PJK87 | DAMD15PJK87 | DAMG15PJK87 |
| DB | 25 | DBMP25PJK87 | DBMC25PJK87 | DBMD25PJK87 | DBMG25PJK87 |
| DC | 37 | DCMP37PJK87 | DCMC37PJK87 | DCMD37PJK87 | DCMG37PJK87 |
| DD | 50 | DDMP50PJK87 | DDMC50PJK87 | DDMD50PJK87 | DDMG50PJK87 |

Note: For contacts with 30 microinches gold substitute K127 for K87. Example: DAMG15PJK127

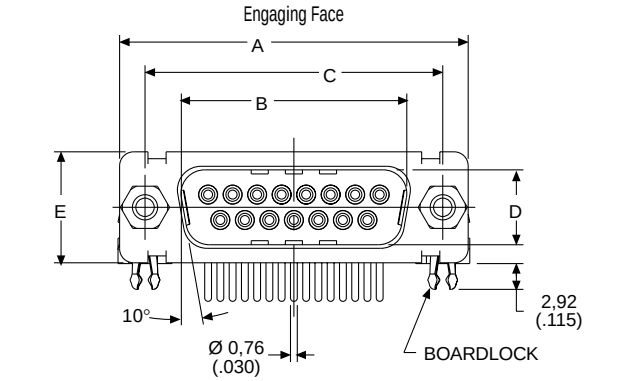


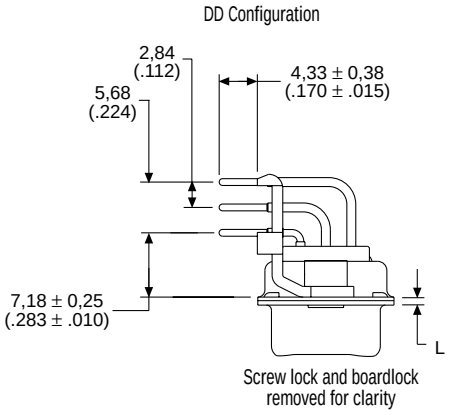


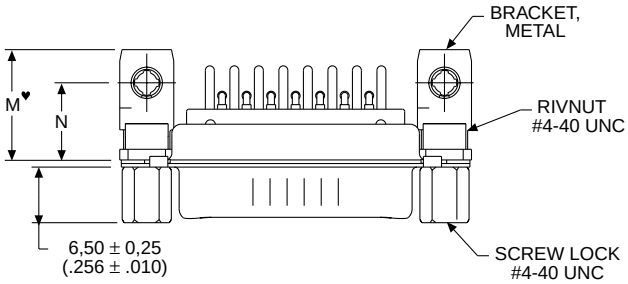


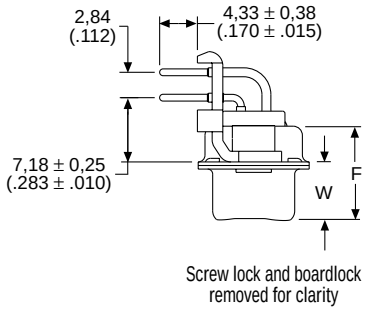


Note: ♥ Dimension varies with alternate bracket configuration. See Reader's Resource page 226.

Dimensions

| Shell Size | A ±0,38 (.015) | B ±0,13 (.005) | C ±0,13 (.005) | D ±0,13 (.005) | E ±0,38 (.015) | F ±0,25 (.010) | W ±0,368 (.0145) | W ±0,41 (.016) | L ±0,25 (.010) | M ±0,25 (.010) | N ±0,25 (.010) |
|---|---|---|---|---|---|---|---|---|---|---|---|
| DE | 30,81 (1.213) | 16,92 (.666) | 24,99 (.984) | 8,36 (.329) | 12,55 (.494) | 10,72 (.422) | 6,693 (.2635) | — | 0,76 (.030) | 12,34 (.486) | 8,64 (.340) |
| DA | 39,14 (1.541) | 25,25 (.994) | 33,32 (1.312) | 8,36 (.329) | 12,55 (.494) | 10,72 (.422) | 6,693 (.2635) | — | 0,76 (.030) | 12,34 (.486) | 8,64 (.340) |
| DB | 53,04 (2.088) | 38,96 (1.534) | 47,04 (1.852) | 8,36 (.329) | 12,55 (.494) | 10,82 (.426) | — | 6,84 (.269) | 0,99 (.039) | 12,34 (.486) | 8,64 (.340) |
| DC | 69,32 (2.729) | 55,42 (2.182) | 63,50 (2.500) | 8,36 (.329) | 12,55 (.494) | 10,82 (.426) | — | 6,84 (.269) | 0,99 (.039) | 12,34 (.486) | 8,64 (.340) |
| DD | 66,93 (2.635) | 52,81 (2.079) | 61,11 (2.406) | 11,07 (.436) | 15,37 (.605) | 10,82 (.426) | — | 6,84 (.269) | 0,99 (.039) | 13,74 (.541) | 10,06 (.396) |

♦ Connector footprint measured from the front shell.
♦♦ Connector footprint measured from the rear shell.



Dimensions are shown in mm (inch)
Dimensions subject to change

## 90° Solder Termination (Machined) — Standard Footprint .318♦ or .283 inch♦♦

Receptacle

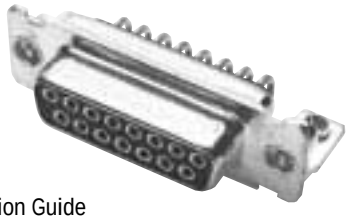

Selection Guide
For Product Features, Specifications, Materials and Finishes, see pages 14-15.

Reader's Resource
For contact cavity arrangements, see page 224.
For P.C. hole patterns, see page 272.
For panel cutouts, see page 221.
For hardware views (Standard), see page 226.
For alternate bracket configuration (when connectors are supplied without boardlocks), see page 226.

Part Numbers

| Shell Size | Layout | Bracket | Bracket & Boardlock | Bracket & Screw Lock #4-40 UNC | Bracket, Boardlock & Screw Lock #4-40 UNC |
|---|---|---|---|---|---|
| DE | 9 | DEMP9SJA197 | DEMC9SJA197 | DEMD9SJA197 | DEMG9SJA197 |
| DA | 15 | DAMP15SJA197 | DAMC15SJA197 | DAMD15SJA197 | DAMG15SJA197 |
| DB | 25 | DBMP25SJA197 | DBMC25SJA197 | DBMD25SJA197 | DBMG25SJA197 |
| DC | 37 | DCMP37SJA197 | DCMC37SJA197 | DCMD37SJA197 | DCMG37SJA197 |
| DD | 50 | DDMP50SJA197 | DDMC50SJA197 | DDMD50SJA197 | DDMG50SJA197 |

Note: For contacts with 30 microinches gold substitute K126 for A197. Example: DAMG15SJK126

Engaging Face

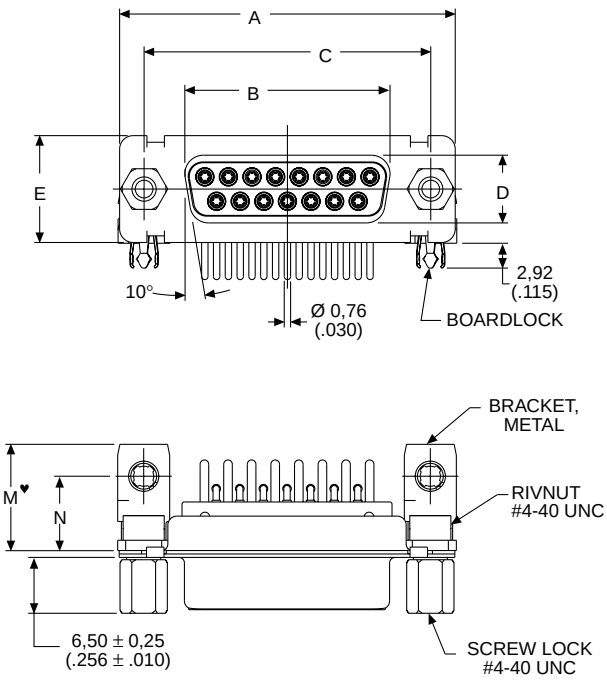


DD Configuration

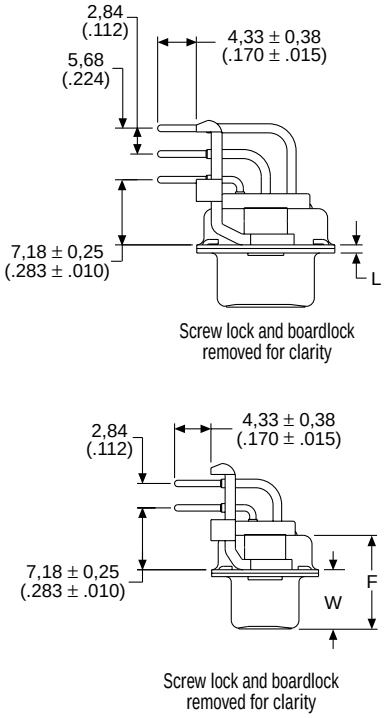


Note: ♥ Dimension varies with alternate bracket configuration. See Reader's Resource page 226.

Dimensions

| Shell Size | A ±0,38 (.015) | B ±0,13 (.005) | C ±0,13 (.005) | D ±0,13 (.005) | E ±0,38 (.015) | F ±0,25 (.010) | W ±0,38 (.015) | L ±0,25 (.010) | M ±0,25 (.010) | N ±0,25 (.010) |
|---|---|---|---|---|---|---|---|---|---|---|
| DE | 30,81 (1.213) | 16,33 (.643) | 24,99 (.984) | 7,90 (.311) | 12,55 (.494) | 10,90 (.429) | 6,94 (.273) | 0,76 (.030) | 12,34 (.486) | 8,64 (.340) |
| DA | 39,14 (1.541) | 24,66 (.971) | 33,32 (1.312) | 7,90 (.311) | 12,55 (.494) | 10,90 (.429) | 6,94 (.273) | 0,76 (.030) | 12,34 (.486) | 8,64 (.340) |
| DB | 53,04 (2.088) | 38,38 (1.511) | 47,04 (1.852) | 7,90 (.311) | 12,55 (.494) | 10,90 (.429) | 6,94 (.273) | 0,76 (.030) | 12,34 (.486) | 8,64 (.340) |
| DC | 69,32 (2.729) | 54,84 (2.159) | 63,50 (2.500) | 7,90 (.311) | 12,55 (.494) | 10,90 (.429) | 6,94 (.273) | 0,76 (.030) | 12,34 (.486) | 8,64 (.340) |
| DD | 66,93 (2.635) | 52,42 (2.064) | 61,11 (2.406) | 10,74 (.423) | 15,37 (.605) | 10,90 (.429) | 6,94 (.273) | 0,76 (.030) | 13,74 (.541) | 10,06 (.396) |

♦ Connector footprint measured from the front shell.
♦♦ Connector footprint measured from the rear shell.

## 90° Solder Termination (Stamped) — Standard Footprint .318 inch

Plug

Selection Guide
For Product Features, Specifications, Materials and Finishes, see pages 14-15.

Reader's Resource
For contact cavity arrangements, see page 224.
For P.C. hole patterns, see page 272.
For panel cutouts, see page 221.
For hardware views (Standard), see page 226.

Part Numbers

| Shell Size | Layout | Plastic Bracket, Integrated Grounding Strap, Boardlock, Threaded Insert #4-40 UNC | Plastic Bracket, Integrated Grounding Strap, Boardlock, Screw Lock #4-40 UNC |
|---|---|---|---|
| DE | 9 | ZEDEL9PBA | ZEDE9PBA |
| DA | 15 | ZEDAL15PBA | ZEDA15PBA |
| DB | 25 | ZEDBL25PBA | ZEDB25PBA |
| DC | 37 | ZEDCL37PBA | ZEDC37PBA |

Note: For contacts with 30 microinches of gold add -30. Example: ZEDEL9PBA-30

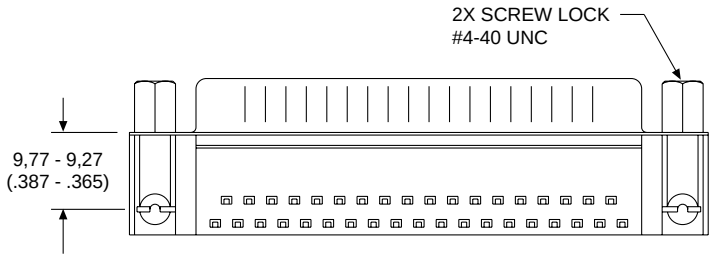


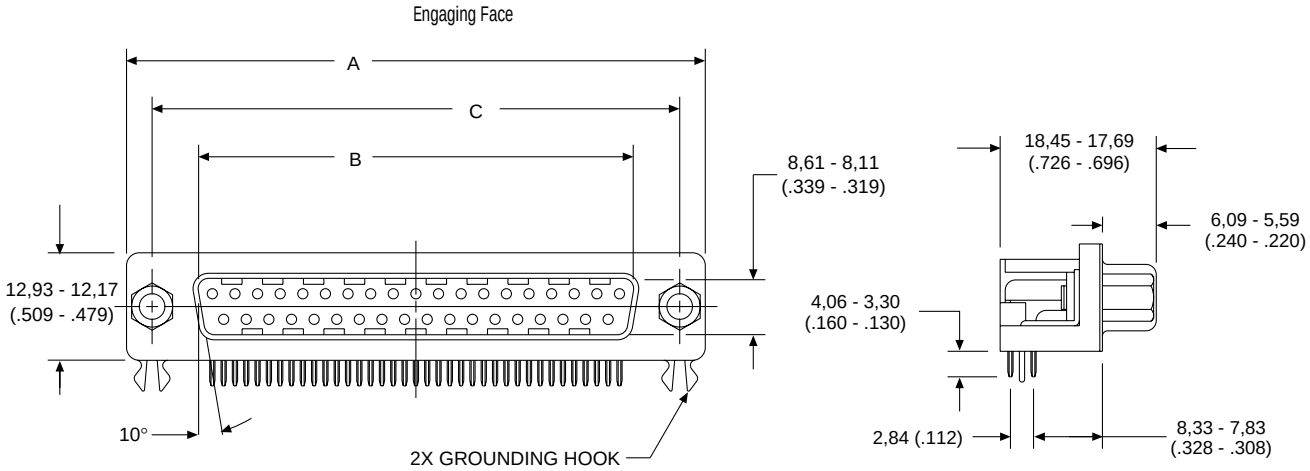


Dimensions

| Shell Size | A ±0,38 (.015) | B ±0,25 (.010) | C ±0,25 (.010) |
|---|---|---|---|
| DE | 30,89 (1.216) | 16,92 (.666) | 24,99 (.984) |
| DA | 39,09 (1.539) | 25,25 (.994) | 33,32 (1.312) |
| DB | 53,09 (2.090) | 38,96 (1.534) | 47,04 (1.852) |
| DC | 69,40 (2.732) | 55,42 (2.182) | 63,50 (2.500) |



Dimensions are shown in mm (inch)
Dimensions subject to change

## 90° Solder Termination (Stamped) — Standard Footprint .318 inch

Receptacle

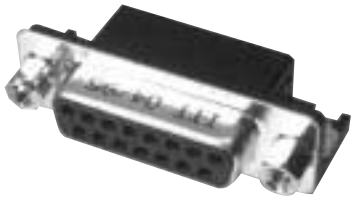

Selection Guide
For Product Features, Specifications, Materials and Finishes, see pages 14-15.

Reader's Resource
For contact cavity arrangements, see page 224.
For P.C. hole patterns, see page 272.
For panel cutouts, see page 221.
For hardware views (Standard), see page 226.

Part Numbers

| Shell Size | Layout | Plastic Bracket, Integrated Grounding Strap, Boardlock, Threaded Insert #4-40 UNC | Plastic Bracket, Integrated Grounding Strap, Boardlock, Screw Lock #4-40 UNC |
|---|---|---|---|
| DE | 9 | ZEDEL9SBA | ZEDE9SBA |
| DA | 15 | ZEDAL15SBA | ZEDA15SBA |
| DB | 25 | ZEDBL25SBA | ZEDB25SBA |
| DC | 37 | ZEDCL37SBA | ZEDC37SBA |

Note: For contacts with 30 microinches gold add -30. Example: ZEDEL9SBA-30

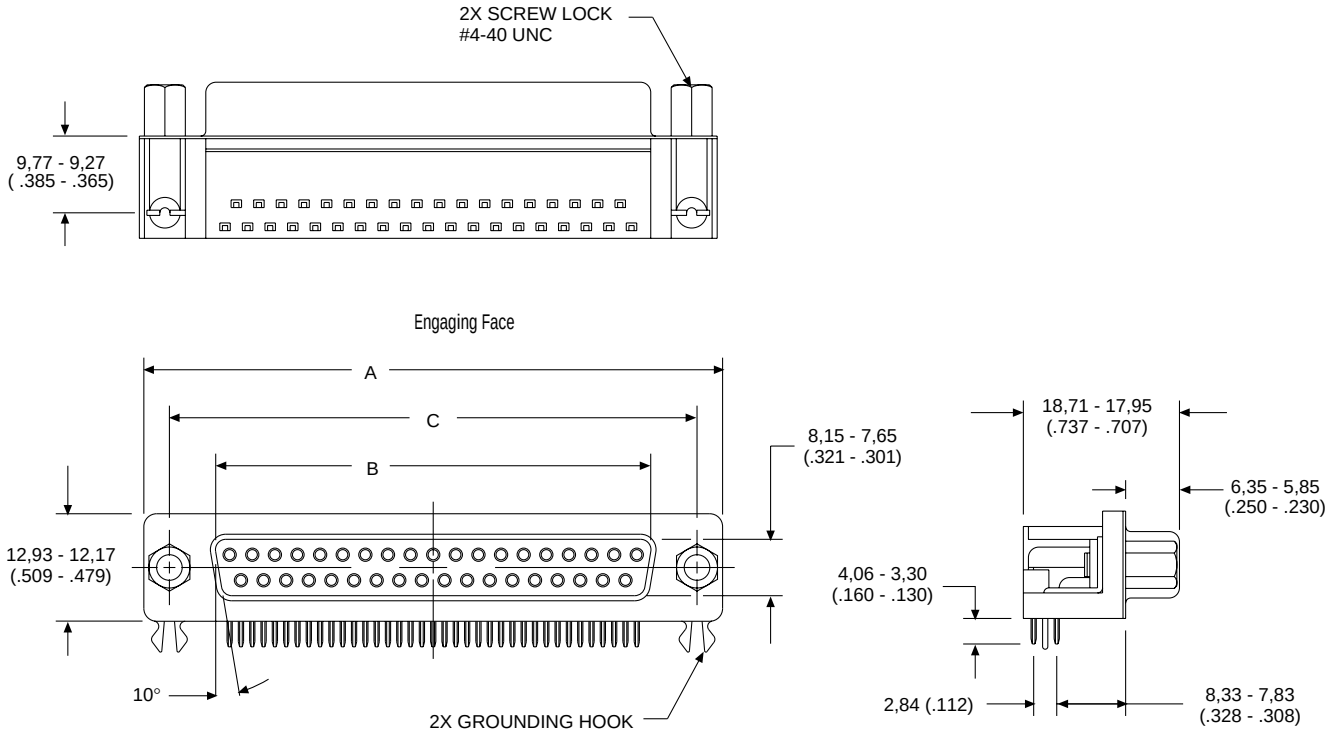


Dimensions

| Shell Size | A ±0,38 (.015) | B ±0,25 (.010) | C ±0,25 (.010) |
|---|---|---|---|
| DE | 30,89 (1.216) | 16,28 (.641) | 24,99 (.984) |
| DA | 39,09 (1.539) | 24,66 (.971) | 33,32 (1.312) |
| DB | 53,09 (2.090) | 38,38 (1.511) | 47,04 (1.852) |
| DC | 69,40 (2.732) | 54,84 (2.159) | 63,50 (2.500) |

## 90° Solder Termination (Machined) — European Footprint 10,2♦ or 9,4 mm♦♦

Plug

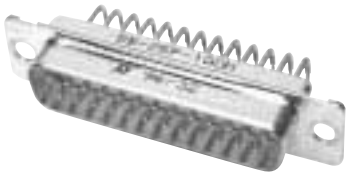

Part Numbers

| Shell Size | Layout | Through Hole |
|---|---|---|
| DE | 9 | DE9P-1A0N-K87 |
| DA | 15 | DA15P-1A0N-K87 |
| DB | 25 | DB25P-1A0N-K87 |
| DC | 37 | DC37P-1A0N-K87 |
| DD | 50 | DD50P-1A0N-K87 |

Note: For performance class 2 add -A191. Example: DE9P-1A0N-A191-K87

Selection Guide
For Product Features, Specifications, Materials and Finishes, see pages 14-15.

Reader's Resource
For contact cavity arrangements, see page 224.
For P.C. hole patterns, see page 273.
For panel cutouts, see page 221.
For hardware views (European), see page 227.

Engaging Face

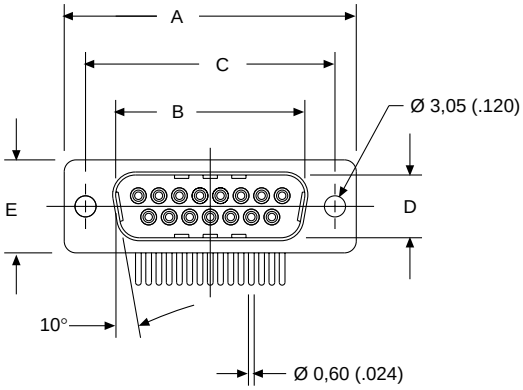


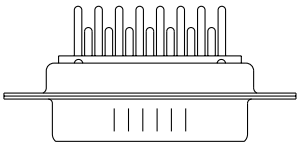

DD Configuration

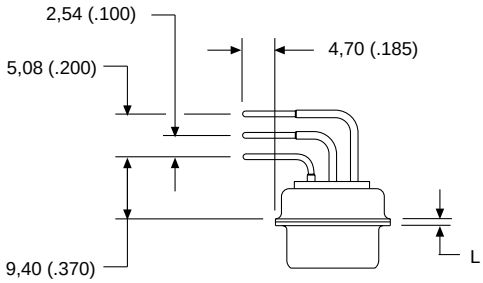


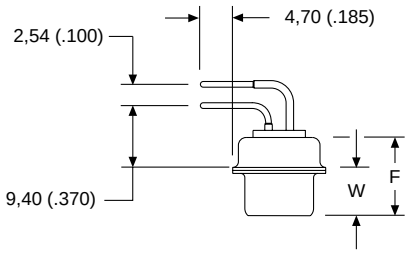


Dimensions

| Shell Size | A ±0,38 (.015) | B ±0,13 (.005) | C ±0,13 (.005) | D ±0,13 (.005) | E ±0,38 (.015) | F ±0,25 (.010) | W ±0,368 (.0145) | W ±0,41 (.016) | L ±0,25 (.010) |
|---|---|---|---|---|---|---|---|---|---|
| DE | 30,81 (1.213) | 16,92 (.666) | 24,99 (.984) | 8,36 (.329) | 12,55 (.494) | 10,72 (.422) | 6,693 (.2635) | — | 0,76 (.030) |
| DA | 39,14 (1.541) | 25,25 (.994) | 33,32 (1.312) | 8,36 (.329) | 12,55 (.494) | 10,72 (.422) | 6,693 (.2635) | — | 0,76 (.030) |
| DB | 53,04 (2.088) | 38,96 (1.534) | 47,04 (1.852) | 8,36 (.329) | 12,55 (.494) | 10,82 (.426) | — | 6,84 (.269) | 0,99 (.039) |
| DC | 69,32 (2.729) | 55,42 (2.182) | 63,50 (2.500) | 8,36 (.329) | 12,55 (.494) | 10,82 (.426) | — | 6,84 (.269) | 0,99 (.039) |
| DD | 66,93 (2.635) | 52,81 (2.079) | 61,11 (2.406) | 11,07 (.436) | 15,37 (.605) | 10,82 (.426) | — | 6,84 (.269) | 0,99 (.039) |

♦ Connector footprint measured from the front shell.
♦♦ Connector footprint measured from the rear shell.



Dimensions are shown in mm (inch)
Dimensions subject to change

## 90° Solder Termination (Machined) — European Footprint 10,2♦ or 9,4 mm♦♦

Receptacle

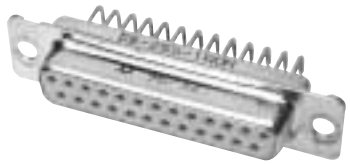

Part Numbers

| Shell Size | Layout | Through Hole |
|---|---|---|
| DE | 9 | DE9S-1AON-A197 |
| DA | 15 | DA15S-1AON-A197 |
| DB | 25 | DB25S-1AON-A197 |
| DC | 37 | DC37S-1AON-A197 |
| DD | 50 | DD50S-1AON-A197 |

Note: For performance class 2 add -A191. Example: DE9S-1AON-A191-A197

Selection Guide
For Product Features, Specifications, Materials and Finishes, see pages 14-15.

Reader's Resource
For contact cavity arrangements, see page 224.
For P.C. hole patterns, see page 273.
For panel cutouts, see page 221.
For hardware views (European), see page 227.

Engaging Face

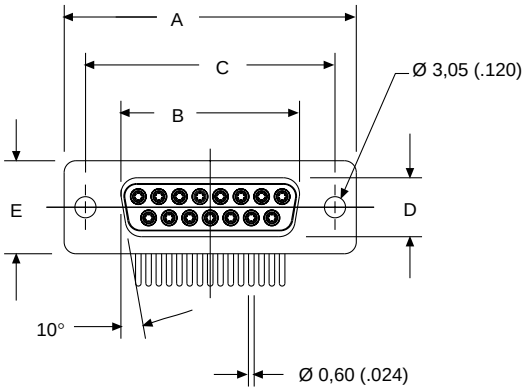


DD Configuration

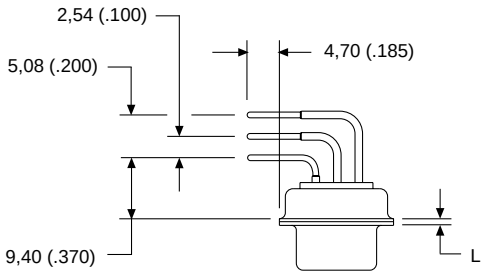


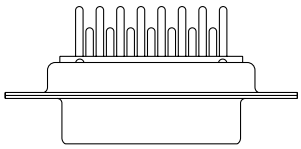

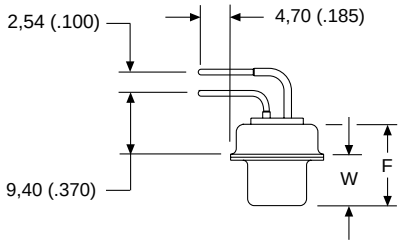


Dimensions

| Shell Size | A ±0,38 (.015) | B ±0,13 (.005) | C ±0,13 (.005) | D ±0,13 (.005) | E ±0,38 (.015) | F ±0,25 (.010) | W ±0,38 (.015) | L ±0,25 (.010) |
|---|---|---|---|---|---|---|---|---|
| DE | 30,81 (1.213) | 16,33 (.643) | 24,99 (.984) | 7,90 (.311) | 12,55 (.494) | 10,90 (.429) | 6,94 (.273) | 0,76 (.030) |
| DA | 39,14 (1.541) | 24,66 (.971) | 33,32 (1.312) | 7,90 (.311) | 12,55 (.494) | 10,90 (.429) | 6,94 (.273) | 0,76 (.030) |
| DB | 53,04 (2.088) | 38,38 (1.511) | 47,04 (1.852) | 7,90 (.311) | 12,55 (.494) | 10,90 (.429) | 6,94 (.273) | 0,76 (.030) |
| DC | 69,32 (2.729) | 54,84 (2.159) | 63,50 (2.500) | 7,90 (.311) | 12,55 (.494) | 10,90 (.429) | 6,94 (.273) | 0,76 (.030) |
| DD | 66,93 (2.635) | 52,42 (2.064) | 61,11 (2.406) | 10,74 (.423) | 15,37 (.605) | 10,90 (.429) | 6,94 (.273) | 0,76 (.030) |

♦ Connector footprint measured from the front shell.
♦♦ Connector footprint measured from the rear shell.

## 90° Solder Termination (Machined) with Metal Bracket — European Footprint 10,2♦ or 9,4♦♦ mm

Plug

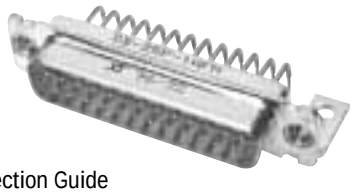

Selection Guide
For Product Features, Specifications, Materials and Finishes, see pages 14-15.

Reader's Resource
For contact cavity arrangements, see page 224.
For P.C. hole patterns, see page 273.
For panel cutouts, see page 221.
For hardware views (European), see page 227.

Part Numbers

| Shell Size | Layout | Bushing with Through Hole | Captive Nut #4-40 UNC | Captive Nut M3 | Post #4-40 UNC |
|---|---|---|---|---|---|
| DE | 9 | DE9P-1AFN-K87 | DE9P-1A7N-K87 | DE9P-1A9N-K87 | DE9P-1A8N-K87 |
| DA | 15 | DA15P-1AFN-K87 | DA15P-1A7N-K87 | DA15P-1A9N-K87 | DA15P-1A8N-K87 |
| DB | 25 | DB25P-1AFN-K87 | DB25P-1A7N-K87 | DB25P-1A9N-K87 | DB25P-1A8N-K87 |
| DC | 37 | DC37P-1AFN-K87 | DC37P-1A7N-K87 | DC37P-1A9N-K87 | DC37P-1A8N-K87 |
| DD | 50 | DD50P-1AFN-K87 | DD50P-1A7N-K87 | DD50P-1A9N-K87 | DD50P-1A8N-K87 |

Notes: For pushfit/boardlock option add -146. Example: DE9P-1AFN-K87-146
For performance class 2 add -A191. Example: DE9P-1AFN-A191-K87

Engaging Face

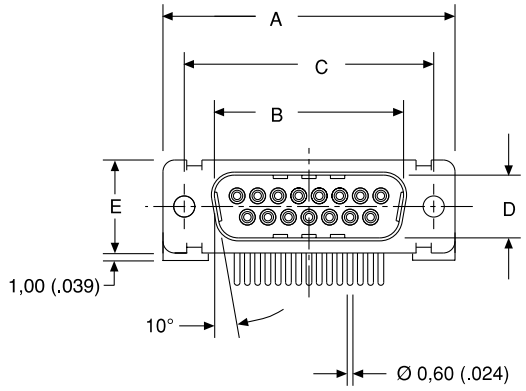


DD Configuration

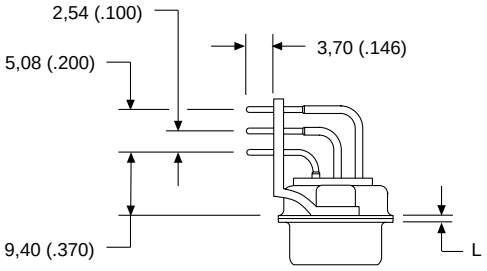


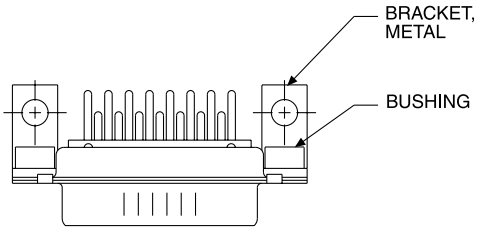


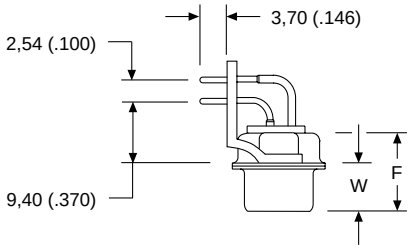


Dimensions

| Shell Size | A ±0,38 (.015) | B ±0,13 (.005) | C ±0,13 (.005) | D ±0,13 (.005) | E ±0.38 (.015) | F ±0.25 (.010) | W ±0,368 (.0145) | W ±0,41 (.016) | L ±0,25 (.010) |
|---|---|---|---|---|---|---|---|---|---|
| DE | 30,81 (1.213) | 16,92 (.666) | 24,99 (.984) | 8,36 (.329) | 12,55 (.494) | 10,72 (.422) | 6,693 (.2635) | — | 0,76 (.030) |
| DA | 39,14 (1.541) | 25,25 (.994) | 33,32 (1.312) | 8,36 (.329) | 12,55 (.494) | 10,72 (.422) | 6,693 (.2635) | — | 0,76 (.030) |
| DB | 53,04 (2.088) | 38,96 (1.534) | 47,04 (1.852) | 8,36 (.329) | 12,55 (.494) | 10,82 (.426) | — | 6,84 (.269) | 0,99 (.039) |
| DC | 69,32 (2.729) | 55,42 (2.182) | 63,50 (2.500) | 8,36 (.329) | 12,55 (.494) | 10,82 (.426) | — | 6,84 (.269) | 0,99 (.039) |
| DD | 66,93 (2.635) | 52,81 (2.079) | 61,11 (2.406) | 11,07 (.436) | 15,37 (.605) | 10,82 (.426) | — | 6,84 (.269) | 0,99 (.039) |

♦ Connector footprint measured from the front shell.
♦♦ Connector footprint measured from the rear shell.



Dimensions are shown in mm (inch)
Dimensions subject to change

## 90° Solder Termination (Machined) with Metal Bracket — European Footprint 10,2♦ or 9,4♦♦ mm

Receptacle

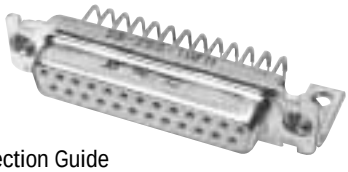

Selection Guide
For Product Features, Specifications, Materials and Finishes, see pages 14-15.

Reader's Resource
For contact cavity arrangements, see page 224.
For P.C. hole patterns, see page 273.
For panel cutouts, see page 221.
For hardware views (European), see page 227.

Part Numbers

| Shell Size | Layout | Bushing with Through Hole | Captive Nut #4-40 UNC | Captive Nut M3 | Post #4-40 UNC |
|---|---|---|---|---|---|
| DE | 9 | DE9S-1AFN-A197 | DE9S-1A7N-A197 | DE9S-1A9N-A197 | DE9S-1A8N-A197 |
| DA | 15 | DA15S-1AFN-A197 | DA15S-1A7N-A197 | DA15S-1A9N-A197 | DA15S-1A8N-A197 |
| DB | 25 | DB25S-1AFN-A197 | DB25S-1A7N-A197 | DB25S-1A9N-A197 | DB25S-1A8N-A197 |
| DC | 37 | DC37S-1AFN-A197 | DC37S-1A7N-A197 | DC37S-1A9N-A197 | DC37S-1A8N-A197 |
| DD | 50 | DD50S-1AFN-A197 | DD50S-1A7N-A197 | DD50S-1A9N-A197 | DD50S-1A8N-A197 |

Notes: For pushfit/boardlock option add -146. Example: DE9S-1AFN-A197-146
For performance class 2 add -A191. Example: DE9S-1AFN-A191-A197

Engaging Face

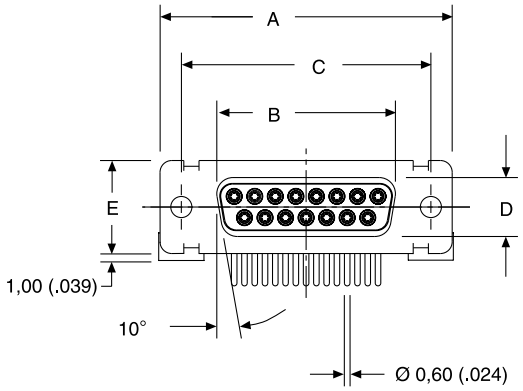


DD Configuration

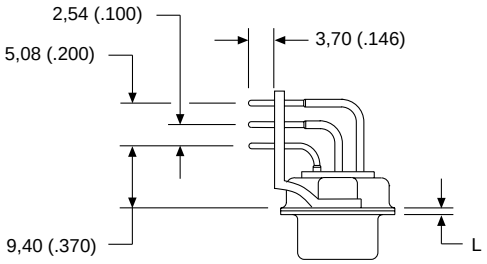


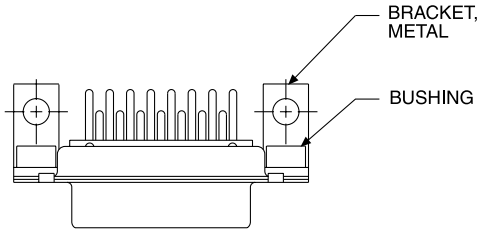


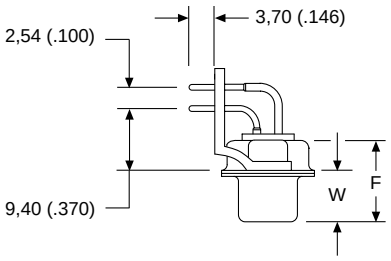


Dimensions

| Shell Size | A ±0,38 (.015) | B ±0,13 (.005) | C ±0,13 (.005) | D ±0,13 (.005) | E ±0,38 (.015) | F ±0,25 (.010) | W ±0,38 (.015) | L ±0,25 (.010) |
|---|---|---|---|---|---|---|---|---|
| DE | 30,81 (1.213) | 16,33 (.643) | 24,99 (.984) | 7,90 (.311) | 12,55 (.494) | 10,90 (.429) | 6,94 (.273) | 0,76 (.030) |
| DA | 39,14 (1.541) | 24,66 (.971) | 33,32 (1.312) | 7,90 (.311) | 12,55 (.494) | 10,90 (.429) | 6,94 (.273) | 0,76 (.030) |
| DB | 53,04 (2.088) | 38,38 (1.511) | 47,04 (1.852) | 7,90 (.311) | 12,55 (.494) | 10,90 (.429) | 6,94 (.273) | 0,76 (.030) |
| DC | 69,32 (2.729) | 54,84 (2.159) | 63,50 (2.500) | 7,90 (.311) | 12,55 (.494) | 10,90 (.429) | 6,94 (.273) | 0,76 (.030) |
| DD | 66,93 (2.635) | 52,42 (2.064) | 61,11 (2.406) | 10,74 (.423) | 15,37 (.605) | 10,90 (.429) | 6,94 (.273) | 0,76 (.030) |

♦ Connector footprint measured from the front shell.
♦♦ Connector footprint measured from the rear shell.

## 90° Solder Termination (Machined) with Plastic Bracket and Grounding Strap — European Footprint 10,2♦ or 9,4 mm♦♦

Plug

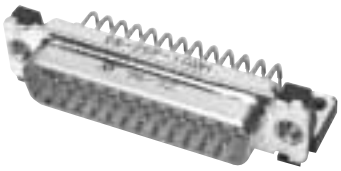

Selection Guide
For Product Features, Specifications, Materials and Finishes, see pages 14-15.

Reader's Resource
For contact cavity arrangements, see page 224.
For P.C. hole patterns, see page 273.
For panel cutouts, see page 221.
For hardware views (European), see page 227.

Part Numbers

| Shell Size | Layout | Through Hole | Captive Nut #4-40 UNC | Captive Nut M3 | Post #4-40 UNC |
|---|---|---|---|---|---|
| DE | 9 | DE9P-1ADN-K87 | DE9P-1AWN-K87 | DE9P-1AVN-K87 | DE9P-1AJN-K87 |
| DA | 15 | DA15P-1ADN-K87 | DA15P-1AWN-K87 | DA15P-1AVN-K87 | DA15P-1AJN-K87 |
| DB | 25 | DB25P-1ADN-K87 | DB25P-1AWN-K87 | DB25P-1AVN-K87 | DB25P-1AJN-K87 |
| DC | 37 | DC37P-1ADN-K87 | DC37P-1AWN-K87 | DC37P-1AVN-K87 | DC37P-1AJN-K87 |
| DD | 50 | DD50P-1ADN-K87 | DD50P-1AWN-K87 | DD50P-1AVN-K87 | DD50P-1AJN-K87 |

Notes: For pushfit/boardlock option add -146. Example: DE9P-1ADN-K87-146
For performance class 2 add -A191. Example: DE9P-1ADN-A191-K87

Engaging Face

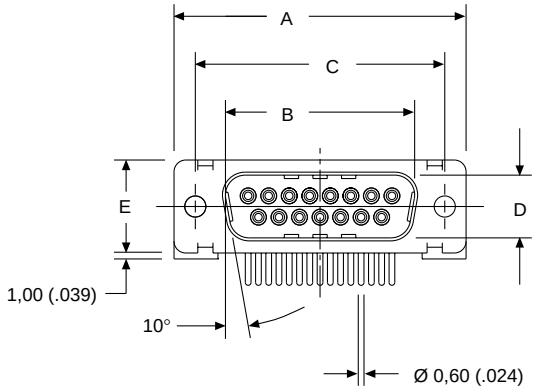


DD Configuration

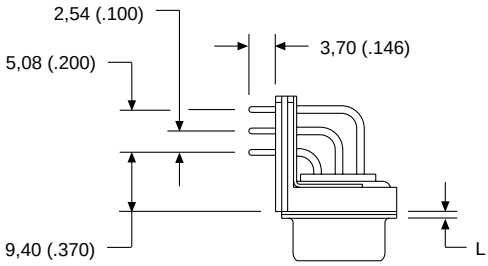


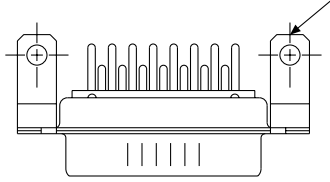


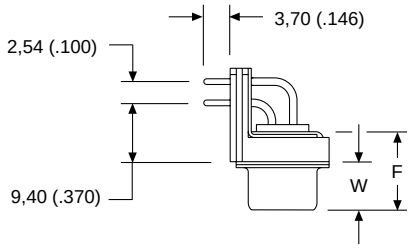


Dimensions

| Shell Size | A ±0,38 (.015) | B ±0,13 (.005) | C ±0,13 (.005) | D ±0,13 (.005) | E ±0.38 (.015) | F ±0,25 (.010) | W ±0,368 (.0145) | W ±0,41 (.016) | L ±0,25 (.010) |
|---|---|---|---|---|---|---|---|---|---|
| DE | 30,81 (1.213) | 16,92 (.666) | 24,99 (.984) | 8,36 (.329) | 12,55 (.494) | 10,72 (.422) | 6,693 (.2635) | — | 0,76 (.030) |
| DA | 39,14 (1.541) | 25,25 (.994) | 33,32 (1.312) | 8,36 (.329) | 12,55 (.494) | 10,72 (.422) | 6,693 (.2635) | — | 0,76 (.030) |
| DB | 53,04 (2.088) | 38,96 (1.534) | 47,04 (1.852) | 8,36 (.329) | 12,55 (.494) | 10,82 (.426) | — | 6,84 (.269) | 0,99 (.039) |
| DC | 69,32 (2.729) | 55,42 (2.182) | 63,50 (2.500) | 8,36 (.329) | 12,55 (.494) | 10,82 (.426) | — | 6,84 (.269) | 0,99 (.039) |
| DD | 66,93 (2.635) | 52,81 (2.079) | 61,11 (2.406) | 11,07 (.436) | 15,37 (.605) | 10,82 (.426) | — | 6,84 (.269) | 0,99 (.039) |

♦ Connector footprint measured from the front shell.
♦♦ Connector footprint measured from the rear shell.



Dimensions are shown in mm (inch)
Dimensions subject to change

## 90° Solder Termination (Machined) with Plastic Bracket and Grounding Strap — European Footprint 10,2♦ or 9,4 mm♦♦

Receptacle

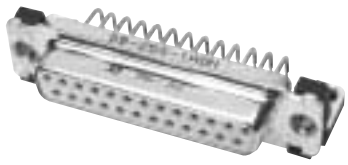

Part Numbers

| Shell Size | Layout | Through Hole | Captive Nut #4-40 UNC | Captive Nut M3 | Post #4-40 UNC |
|---|---|---|---|---|---|
| DE | 9 | DE9S-1ADN-A197 | DE9S-1AWN-A197 | DE9S-1AVN-A197 | DE9S-1AJN-A197 |
| DA | 15 | DA15S-1ADN-A197 | DA15S-1AWN-A197 | DA15S-1AVN-A197 | DA15S-1AJN-A197 |
| DB | 25 | DB25S-1ADN-A197 | DB25S-1AWN-A197 | DB25S-1AVN-A197 | DB25S-1AJN-A197 |
| DC | 37 | DC37S-1ADN-A197 | DC37S-1AWN-A197 | DC37S-1AVN-A197 | DC37S-1AJN-A197 |
| DD | 50 | DD50S-1ADN-A197 | DD50S-1AWN-A197 | DD50S-1AVN-A197 | DD50S-1AJN-A197 |

Notes: For pushfit/boardlock option add -146. Example: DE9S-1ADN-A197-146
For performance class 2 add -A191. Example: DE9S-1ADN-A191-A197

Selection Guide
For Product Features, Specifications, Materials and Finishes, see pages 14-15.

Reader's Resource
For contact cavity arrangements, see page 224.
For P.C. hole patterns, see page 273.
For panel cutouts, see page 221.
For hardware views (European), see page 227.

Engaging Face

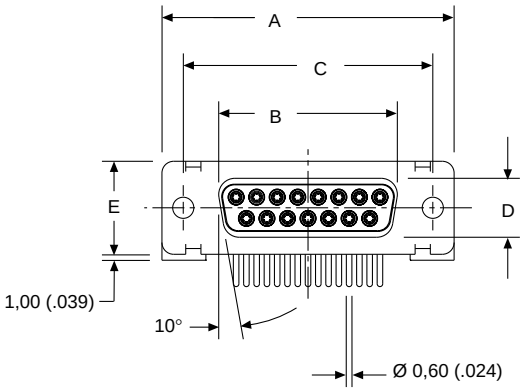


DD Configuration

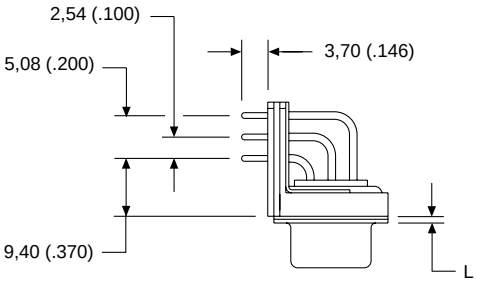


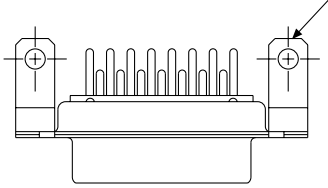


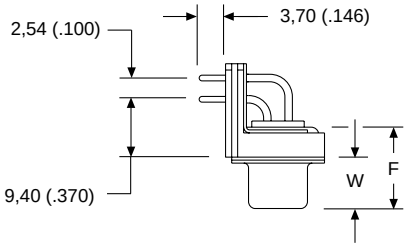


Dimensions

| Shell Size | A ±0,38 (.015) | B ±0,13 (.005) | C ±0,13 (.005) | D ±0,13 (.005) | E ±0.38 (.015) | F ±0,25 (.010) | W ±0,38 (.015) | L ±0,25 (.010) |
|---|---|---|---|---|---|---|---|---|
| DE | 30,81 (1.213) | 16,33 (.643) | 24,99 (.984) | 7,90 (.311) | 12,55 (.494) | 10,90 (.429) | 6,94 (.273) | 0,76 (.030) |
| DA | 39,14 (1.541) | 24,66 (.971) | 33,32 (1.312) | 7,90 (.311) | 12,55 (.494) | 10,90 (.429) | 6,94 (.273) | 0,76 (.030) |
| DB | 53,04 (2.088) | 38,38 (1.511) | 47,04 (1.852) | 7,90 (.311) | 12,55 (.494) | 10,90 (.429) | 6,94 (.273) | 0,76 (.030) |
| DC | 69,32 (2.729) | 54,84 (2.159) | 63,50 (2.500) | 7,90 (.311) | 12,55 (.494) | 10,90 (.429) | 6,94 (.273) | 0,76 (.030) |
| DD | 66,93 (2.635) | 52,42 (2.064) | 61,11 (2.406) | 10,74 (.423) | 15,37 (.605) | 10,90 (.429) | 6,94 (.273) | 0,76 (.030) |

♦ Connector footprint measured from the front shell.
♦♦ Connector footprint measured from the rear shell.

## 90° Solder Termination (Machined) with Plastic Bracket — European Footprint 10,2♦ or 9,4 mm♦♦

Plug

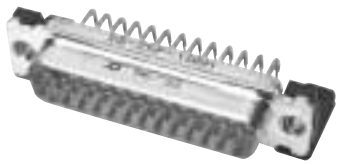

Part Numbers

| Shell Size | Layout | Through Hole | Captive Nut #4-40 UNC | Captive Nut M3 | Post #4-40 UNC |
|---|---|---|---|---|---|
| DE | 9 | DE9P-1A5N-K87 | DE9P-1AUN-K87 | DE9P-1ATN-K87 | DE9P-1A6N-K87 |
| DA | 15 | DA15P-1A5N-K87 | DA15P-1AUN-K87 | DA15P-1ATN-K87 | DA15P-1A6N-K87 |
| DB | 25 | DB25P-1A5N-K87 | DB25P-1AUN-K87 | DB25P-1ATN-K87 | DB25P-1A6N-K87 |
| DC | 37 | DC37P-1A5N-K87 | DC37P-1AUN-K87 | DC37P-1ATN-K87 | DC37P-1A6N-K87 |
| DD | 50 | DD50P-1A5N-K87 | DD50P-1AUN-K87 | DD50P-1ATN-K87 | DD50P-1A6N-K87 |

Notes: For pushfit/boardlock option add -146. Example: DE9P-1A5N-K87-146
For performance class 2 add -A191. Example: DE9P-1A5N-A191-K87

Selection Guide
For Product Features, Specifications, Materials and Finishes, see pages 14-15.

Reader's Resource
For contact cavity arrangements, see page 224.
For P.C. hole patterns, see page 273.
For panel cutouts, see page 221.
For hardware views (European), see page 227.

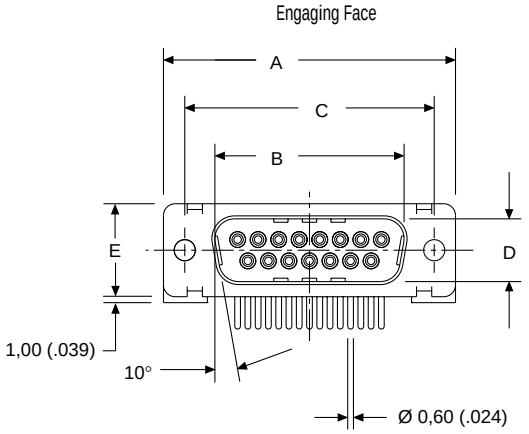


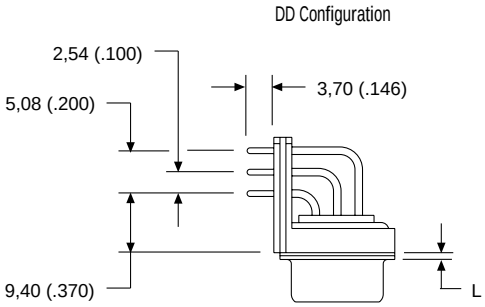


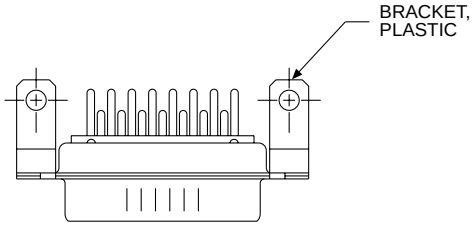


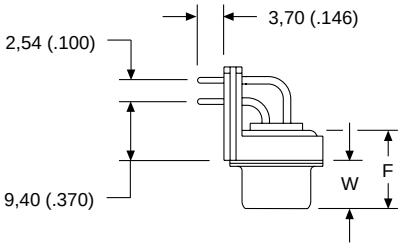


Dimensions

| Shell Size | A ±0,38 (.015) | B ±0,13 (.005) | C ±0,13 (.005) | D ±0,13 (.005) | E ±0,38 (.015) | F ±0,25 (.010) | W ±0,368 (.145) | W ±0,41 (.016) | L ±0,25 (.010) |
|---|---|---|---|---|---|---|---|---|---|
| DE | 30,81 (1.213) | 16,92 (.666) | 24,99 (.984) | 8,36 (.329) | 12,55 (.494) | 10,72 (.422) | 6,693 (.2635) | — | 0,76 (.030) |
| DA | 39,14 (1.541) | 25,25 (.994) | 33,32 (1.312) | 8,36 (.329) | 12,55 (.494) | 10,72 (.422) | 6,693 (.2635) | — | 0,76 (.030) |
| DB | 53,04 (2.088) | 38,96 (1.534) | 47,04 (1.852) | 8,36 (.329) | 12,55 (.494) | 10,82 (.426) | — | 6,84 (.269) | 0,99 (.039) |
| DC | 69,32 (2.729) | 55,42 (2.182) | 63,50 (2.500) | 8,36 (.329) | 12,55 (.494) | 10,82 (.426) | — | 6,84 (.269) | 0,99 (.039) |
| DD | 66,93 (2.635) | 52,81 (2.079) | 61,11 (2.406) | 11,07 (.436) | 15,37 (.605) | 10,82 (.426) | — | 6,84 (.269) | 0,99 (.039) |

♦ Connector footprint measured from the front shell.
♦♦ Connector footprint measured from the rear shell.



Dimensions are shown in mm (inch)
Dimensions subject to change

## 90° Solder Termination (Machined) with Plastic Bracket — European Footprint 10,2♦ or 9,4 mm♦♦

Receptacle

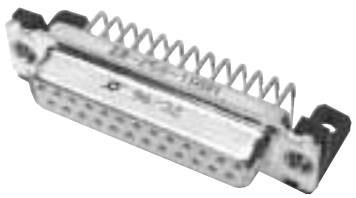

Selection Guide
For Product Features, Specifications, Materials and Finishes, see pages 14-15.

Reader's Resource
For contact cavity arrangements, see page 224.
For P.C. hole patterns, see page 273.
For panel cutouts, see page 221.
For hardware views (European), see page 227.

Part Numbers

| Shell Size | Layout | Through Hole | Captive Nut #4-40 UNC | Captive Nut M3 | Post #4-40 UNC |
|---|---|---|---|---|---|
| DE | 9 | DE9S-1A5N-A197 | DE9S-1AUN-A197 | DE9S-1ATN-A197 | DE9S-1A6N-A197 |
| DA | 15 | DA15S-1A5N-A197 | DA15S-1AUN-A197 | DA15S-1ATN-A197 | DA15S-1A6N-A197 |
| DB | 25 | DB25S-1A5N-A197 | DB25S-1AUN-A197 | DB25S-1ATN-A197 | DB25S-1A6N-A197 |
| DC | 37 | DC37S-1A5N-A197 | DC37S-1AUN-A197 | DC37S-1ATN-A197 | DC37S-1A6N-A197 |
| DD | 50 | DD50S-1A5N-A197 | DD50S-1AUN-A197 | DD50S-1ATN-A197 | DD50S-1A6N-A197 |

Notes: For push/boardlock option add -146. Example: DE9S-1A5N-A197-146
For performance class 2 add -A191. Example: DE9S-1A5N-A191-A197

Engaging Face

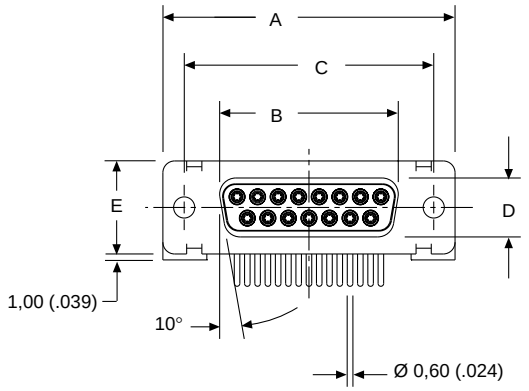


DD Configuration

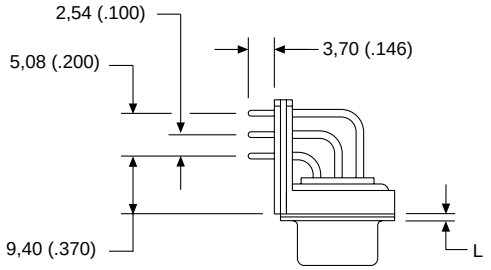


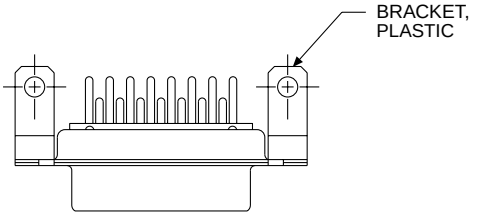


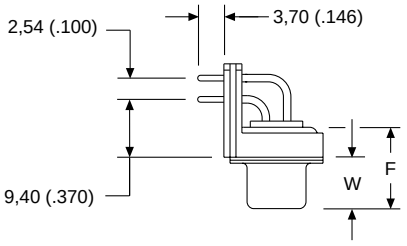


Dimensions

| Shell Size | A ±0,38 (.015) | B ±0,13 (.005) | C ±0,13 (.005) | D ±0,13 (.005) | E ±0,38 (.015) | F ±0,25 (.010) | W ±0,38 (.015) | L ±0,25 (.010) |
|---|---|---|---|---|---|---|---|---|
| DE | 30,81 (1.213) | 16,33 (.643) | 24,99 (.984) | 7,90 (.311) | 12,55 (.494) | 10,90 (.429) | 6,94 (.273) | 0,76 (.030) |
| DA | 39,14 (1.541) | 24,66 (.971) | 33,32 (1.312) | 7,90 (.311) | 12,55 (.494) | 10,90 (.429) | 6,94 (.273) | 0,76 (.030) |
| DB | 53,04 (2.088) | 38,38 (1.511) | 47,04 (1.852) | 7,90 (.311) | 12,55 (.494) | 10,90 (.429) | 6,94 (.273) | 0,76 (.030) |
| DC | 69,32 (2.729) | 54,84 (2.159) | 63,50 (2.500) | 7,90 (.311) | 12,55 (.494) | 10,90 (.429) | 6,94 (.273) | 0,76 (.030) |
| DD | 66,93 (2.635) | 52,42 (2.064) | 61,11 (2.406) | 10,74 (.423) | 15,37 (.605) | 10,90 (.429) | 6,94 (.273) | 0,76 (.030) |

♦ Connector footprint measured from the front shell.
♦♦ Connector footprint measured from the rear shell.

## 90° Solder Termination (Stamped) — European Footprint 10,2 mm

Plug

Selection Guide
For Product Features, Specifications, Materials and Finishes, see pages 14-15.

Reader's Resource
For contact cavity arrangements, see page 224.
For P.C. hole patterns, see page 273.
For panel cutouts, see page 221.
For hardware views (European), see page 227.

Part Numbers

| Shell Size | Layout | Plastic Bracket, Integrated Grounding Strap, Boardlock, Threaded Insert #4-40 UNC | Plastic Bracket, Integrated Grounding Strap, Boardlock, Screw Lock #4-40 UNC |
|---|---|---|---|
| DE | 9 | ZDEL9P-1AKN-146 | ZDE9P-1AKN-146 |
| DA | 15 | ZDAL15P-1AKN-146 | ZDA15P-1AKN-146 |
| DB | 25 | ZDBL25P-1AKN-146 | ZDB25P-1AKN-146 |
| DC | 37 | ZDCL37P-1AKN-146 | ZDC37P-1AKN-146 |

Note: For contacts with 30 microinches gold add -A191. Example: ZDEL9P-1AKN-A191-146

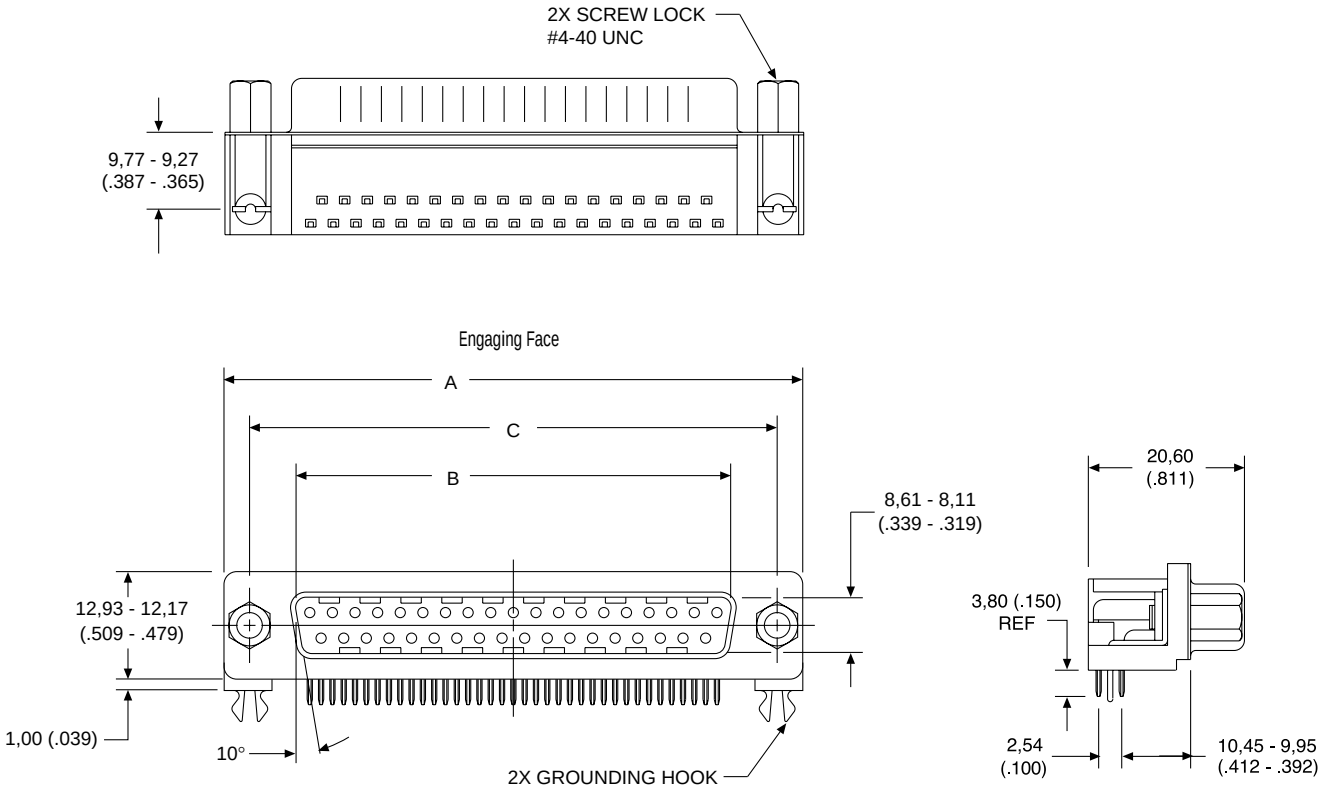


Dimensions

| Shell Size | A ±0,38 (.015) | B ±0,25 (.010) | C ±0,13 (.005) |
|---|---|---|---|
| DE | 30,89 (1.216) | 16,92 (.666) | 24,99 (.984) |
| DA | 39,09 (1.539) | 25,25 (.994) | 33,32 (1.312) |
| DB | 53,09 (2.090) | 38,96 (1.534) | 47,04 (1.852) |
| DC | 69,40 (2.732) | 55,42 (2.182) | 63,50 (2.500) |



Dimensions are shown in mm (inch)
Dimensions subject to change

## 90° Solder Termination (Stamped) — European Footprint 10,2 mm

Receptacle

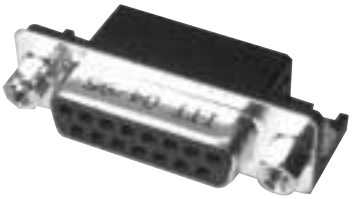

Selection Guide
For Product Features, Specifications, Materials and Finishes, see pages 14-15.

Reader's Resource
For contact cavity arrangements, see page 224.
For P.C. hole patterns, see page 273.
For panel cutouts, see page 221.
For hardware views (European), see page 227.

Part Numbers

| Shell Size | Layout | Plastic Bracket, Integrated Grounding Strap, Boardlock, Threaded Insert #4-40 UNC | Plastic Bracket, Integrated Grounding Strap, Boardlock, Screw Lock #4-40 UNC |
|---|---|---|---|
| DE | 9 | ZDEL9S-1AKN-146 | ZDE9S-1AKN-146 |
| DA | 15 | ZDAL15S-1AKN-146 | ZDA15S-1AKN-146 |
| DB | 25 | ZDBL25S-1AKN-146 | ZDB25S-1AKN-146 |
| DC | 37 | ZDCL37S-1AKN-146 | ZDC37S-1AKN-146 |

Note: For contacts with -A191 microinches gold add -A191. Example: ZDEL9S-1AKN-A191-146

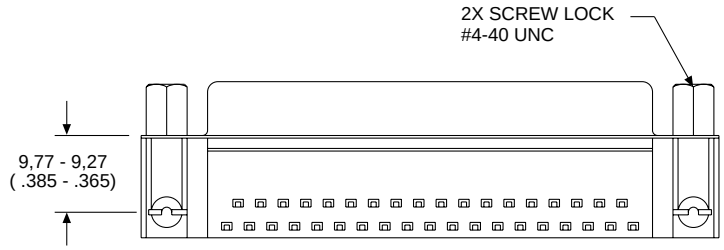


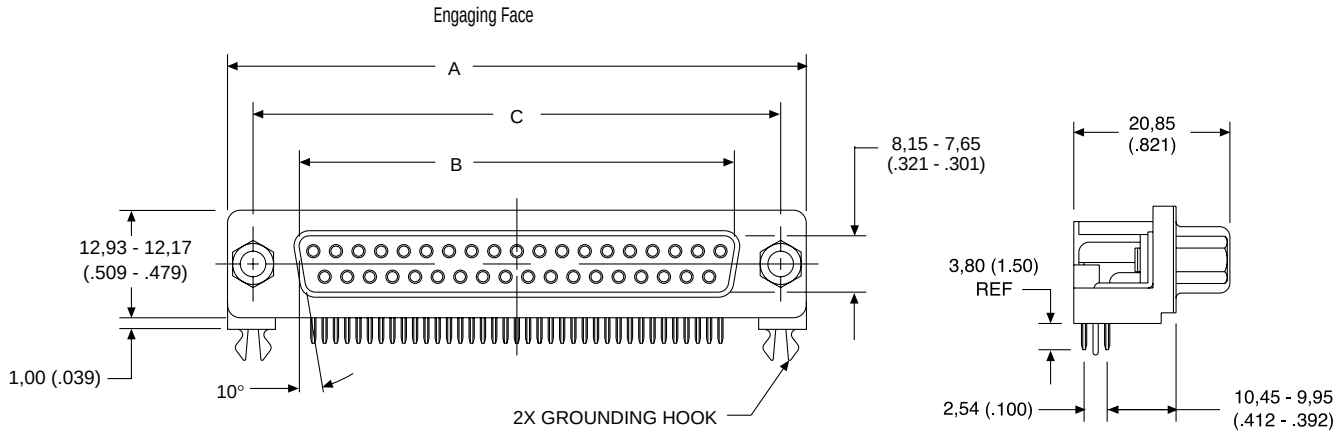


Dimensions

| Shell Size | A ±0,38 (.015) | B ±0,25 (.010) | C ±0,13 (.005) |
|---|---|---|---|
| DE | 30,89 (1.216) | 16,33 (.643) | 24,99 (.984) |
| DA | 39,09 (1.539) | 24,66 (.971) | 33,32 (1.312) |
| DB | 53,09 (2.090) | 38,38 (1.511) | 47,04 (1.852) |
| DC | 69,40 (2.732) | 54,84 (2.159) | 63,50 (2.500) |

## D* — Solder Cup Termination (Machined) with Tin Shells

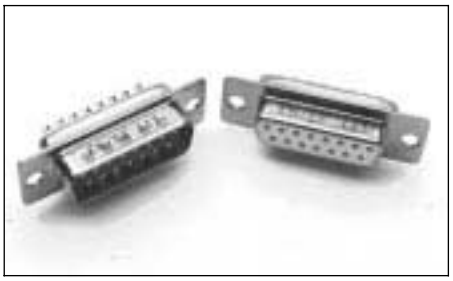

D* solder cup connectors are used for cable or panel mount wiring applications. Solder cup connectors provide maximum flexibility and performance for applications requiring discrete solder terminations and field repair without termination tooling.

### Product Features

Machined solder cup termination, 5 A current capacity
High performance commercial class connectors
Two contact performance classes
Optional clinch nuts with #4-40 UNC or M3 threads

See pages 32-33.

## ZD* — Solder Cup Termination (Stamped) with Tin Shells

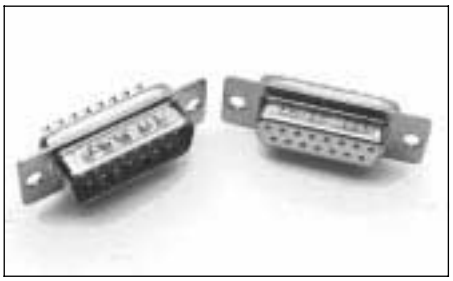

ZD* solder cup connectors are used for cable or panel mount wiring applications. Solder cup connectors provide maximum flexibility and performance for applications requiring discrete solder terminations.

### Product Features

Stamped solder cup termination, 5 A current capacity
Economical

See pages 34-35.

## D*A — Crimp Connectors without Contacts

D*A crimp contact connectors are designed for reliable, fast cabling. Available in the industry standard D*A housing, the connectors provide a low-cost, quick cabling alternative compared to soldering.

### Product Features

Crimp contacts available in reels of 5,000
Application tooling:
– Hand or automatic
– Stripper crimper

See pages 36-37.

## D*W — Discrete Wire IDC

The D*W connector provides insulation displacement connection technology for either solid or stranded wires. With D*W, speed of cabling is increased significantly over solder cup or crimp solutions. Contacts are easily removable and replaceable. Several specialized accessories (including shield cans, ferrules, and plastic boots) are available to provide a complete product solution.

### Product Features

Quick harnessing capability with simple hand or semi-automatic tooling
Accepts 30 AWG to 20 AWG wire; sizes can be mixed
Shield cans insure reliable shielding continuity

See pages 38-41.



Dimensions are shown in mm (inch)
Dimensions subject to change

## Specifications

| | |
|---|---|
| Temperature Rating | −55°C to 125°C |
| Current Rating | 5 A |
| Contact Resistance | 10 mΩ |
| Dielectric Withstanding Voltage | 1250 VAC |

## Materials and Finishes

| Description | Material | Finish |
|---|---|---|
| Shell/Hardware | Steel | Tin |
| Insulator | Thermoplastic, UL 94V-0 | None |
| Contacts | Copper Alloy | Gold over Nickel |

## Specifications

| | |
|---|---|
| Temperature Rating | −55°C to 105°C |
| Current Rating | 5 A |
| Contact Resistance | 15 mΩ |
| Dielectric Withstanding Voltage | 1000 VAC at Sea Level |

## Materials and Finishes

| Description | Material | Finish |
|---|---|---|
| Shell | Steel | Tin |
| Insulator | Thermoplastic, UL 94V-0 | None |
| Contacts | Copper Alloy | Gold over Nickel |

## Specifications

| | |
|---|---|
| Temperature Rating | −55°C to 105°C |
| Current Rating | 5 A (20 AWG) |
| Contact Resistance | 15 mΩ |
| Dielectric Withstanding Voltage | 500 VAC at Sea Level |

## Materials and Finishes

| Description | Material | Finish |
|---|---|---|
| Shell/Hardware | Steel | Tin |
| Insulator | Thermoplastic, UL 94V-0 | None |
| Contacts | Copper Alloy | Gold over Nickel |

## Specifications

| | |
|---|---|
| Temperature Rating | −55°C to 125°C |
| Current Rating | 3 A (20 AWG)<br>2 A (22 AWG)<br>1,4 A (24 AWG)<br>1,2 A (26 AWG)<br>1 A (28 AWG)<br>0,8 A (30 AWG) |
| Contact Resistance | 15 mΩ |
| Dielectric Withstanding Voltage | 1000 VAC at Sea Level |

## Materials and Finishes

| Description | Material | Finish |
|---|---|---|
| Shell/Hardware | Steel | Tin |
| Insulator | Thermoplastic, UL 94V-0 | None |
| Contacts | Copper Alloy | Gold over Nickel in mating area, Tin on balance |

## Solder Cup Termination (Machined) with Tin Shells

Plug

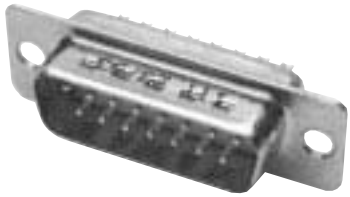

Selection Guide
For Product Features, Specifications, Materials and Finishes, see pages 30-31.

Reader's Resource
For contact cavity arrangements, see page 224.
For panel cutouts, see page 221.
For hardware views (European), see page 227.

Part Numbers

| Shell Size | Layout | Through Hole | Clinch Nut #4-40 UNC | Clinch Nut M3 |
|---|---|---|---|---|
| DE | 9 | DE9PK87 | DEE9PK87 | DEX9PK87 |
| DA | 15 | DA15PK87 | DAE15PK87 | DAX15PK87 |
| DB | 25 | DB25PK87 | DBE25PK87 | DBX25PK87 |
| DC | 37 | DC37PK87 | DCE37PK87 | DCX37PK87 |
| DD | 50 | DD50PK87 | DDE50PK87 | DDX50PK87 |

Note: For performance class 2, add A191. Example: DA15PA191K87.

Engaging Face

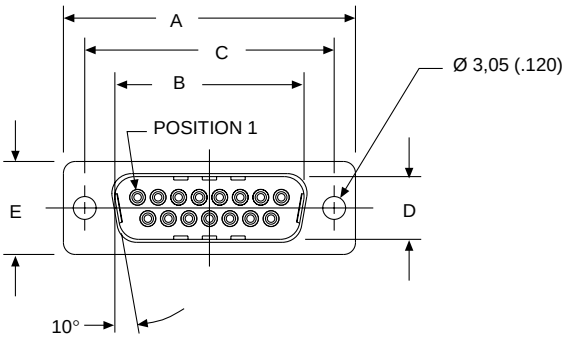


DD Configuration

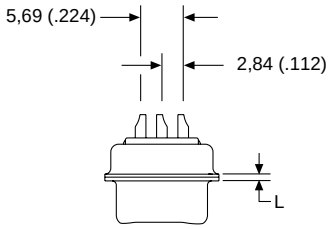


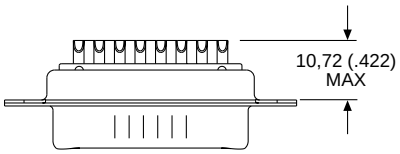


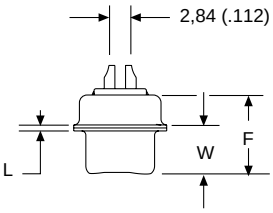


Dimensions

| Shell Size | A ±0,38 (.015) | B ±0,13 (.005) | C ±0,13 (.005) | D ±0,13 (.005) | E ±0,38 (.015) | F ±0,25 (.010) | W ±0,368 (.0145) | W ±0,41 (.016) | L ±0,25 (.010) |
|---|---|---|---|---|---|---|---|---|---|
| DE | 30,81 (1.213) | 16,92 (.666) | 24,99 (.984) | 8,36 (.329) | 12,55 (.494) | 10,72 (.422) | 6,693 (.2635) | — | 0,76 (.030) |
| DA | 39,14 (1.541) | 25,25 (.994) | 33,32 (1.312) | 8,36 (.329) | 12,55 (.494) | 10,72 (.422) | 6,693 (.2635) | — | 0,76 (.030) |
| DB | 53,04 (2.088) | 38,96 (1.534) | 47,04 (1.852) | 8,36 (.329) | 12,55 (.494) | 10,82 (.426) | — | 6,84 (.269) | 0,99 (.039) |
| DC | 69,32 (2.729) | 55,42 (2.182) | 63,50 (2.500) | 8,36 (.329) | 12,55 (.494) | 10,82 (.426) | — | 6,84 (.269) | 0,99 (.039) |
| DD | 66,93 (2.635) | 52,81 (2.079) | 61,11 (2.406) | 11,07 (.436) | 15,37 (.605) | 10,82 (.426) | — | 6,84 (.269) | 0,99 (.039) |



Dimensions are shown in mm (inch)
Dimensions subject to change

## Solder Cup Termination (Machined) with Tin Shells

Receptacle

Selection Guide
For Product Features, Specifications, Materials and Finishes, see pages 30-31.

Reader's Resource
For contact cavity arrangements, see page 224.
For panel cutouts, see page 221.
For hardware views (European), see page 227.

Part Numbers

| Shell Size | Layout | Through Hole | Clinch Nut #4-40 UNC | Clinch Nut M3 |
|---|---|---|---|---|
| DE | 9 | DE9SA197 | DEE9SA197 | DEX9SA197 |
| DA | 15 | DA15SA197 | DAE15SA197 | DAX15SA197 |
| DB | 25 | DB25SA197 | DBE25SA197 | DBX25SA197 |
| DC | 37 | DC37SA197 | DCE37SA197 | DCX37SA197 |
| DD | 50 | DD50SA197 | DDE50SA197 | DDX50SA197 |

Note: For performance class 2, add A191. Example: DA15SA191A197.

Engaging Face

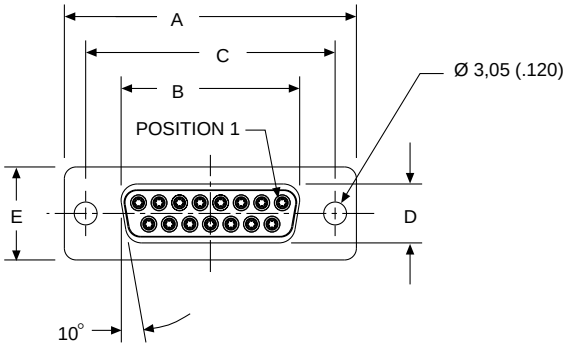


DD Configuration

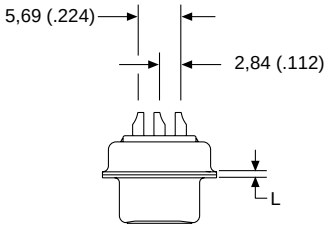


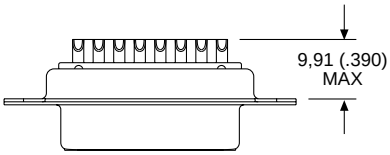


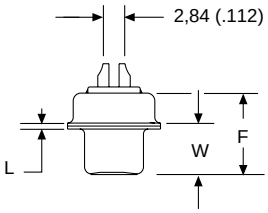


Dimensions

| Shell Size | A ±0,38 (.015) | B ±0,13 (.005) | C ±0,13 (.005) | D ±0,13 (.005) | E ±0,38 (.015) | F ±0,25 (.010) | W ±0,38 (.015) | L ±0,25 (.010) |
|---|---|---|---|---|---|---|---|---|
| DE | 30,81 (1.213) | 16,33 (.643) | 24,99 (.984) | 7,90 (.311) | 12,55 (.494) | 10,90 (.429) | 6,94 (.273) | 0,76 (.030) |
| DA | 39,14 (1.541) | 24,66 (.971) | 33,32 (1.312) | 7,90 (.311) | 12,55 (.494) | 10,90 (.429) | 6,94 (.273) | 0,76 (.030) |
| DB | 53,04 (2.088) | 38,38 (1.511) | 47,04 (1.852) | 7,90 (.311) | 12,55 (.494) | 10,90 (.429) | 6,94 (.273) | 0,76 (.030) |
| DC | 69,32 (2.729) | 54,84 (2.159) | 63,50 (2.500) | 7,90 (.311) | 12,55 (.494) | 10,90 (.429) | 6,94 (.273) | 0,76 (.030) |
| DD | 66,93 (2.635) | 52,42 (2.064) | 61,11 (2.406) | 10,74 (.423) | 15,37 (.605) | 10,90 (.429) | 6,94 (.273) | 0,76 (.030) |

## Solder Cup Termination (Stamped) with Tin Shells

### Plug

Selection Guide
For Product Features, Specifications, Materials and Finishes, see pages 30-31.

Reader's Resource
For contact cavity arrangements, see page 224.
For panel cutouts, see page 221.
For hardware views (Standard), see page 226.

### Part Numbers

| Shell Size | Layout | Through Hole |
|---|---|---|
| DE | 9 | ZDE9P |
| DA | 15 | ZDA15P |
| DB | 25 | ZDB25P |
| DC | 37 | ZDC37P |
| DD | 50 | ZDD50P |

Engaging Face

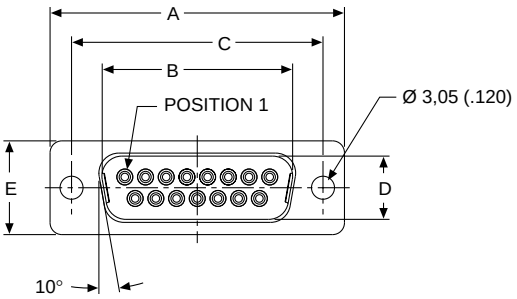


DD Configuration

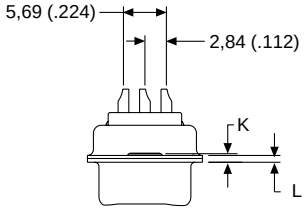


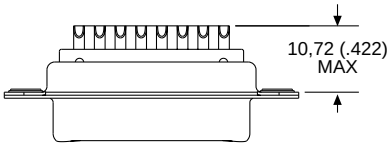


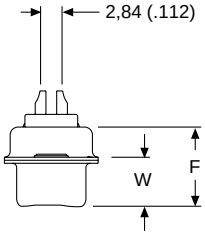


### Dimensions

| Shell Size | A ±0,38 (.015) | B ±0,13 (.005) | C ±0,13 (.005) | D ±0,13 (.005) | E ±0,38 (.015) | F ±0,25 (.010) | W ±0,368 (.0145) | W ±0,41 (.016) | K ±0,317 (.0125) | K ±0,25 (.010) | L ±0,25 (.010) |
|---|---|---|---|---|---|---|---|---|---|---|---|
| DE | 30,81 (1.213) | 16,92 (.666) | 24,99 (.984) | 8,36 (.329) | 12,55 (.494) | 10,72 (.422) | 6,693 (.2635) | — | 1,206 (.0475) | — | 0,76 (.030) |
| DA | 39,14 (1.541) | 25,25 (.994) | 33,32 (1.312) | 8,36 (.329) | 12,55 (.494) | 10,72 (.422) | 6,693 (.2635) | — | 1,206 (.0475) | — | 0,76 (.030) |
| DB | 53,04 (2.088) | 38,96 (1.534) | 47,04 (1.852) | 8,36 (.329) | 12,55 (.494) | 10,82 (.426) | — | 6,84 (.269) | — | 1,52 (.060) | 0,99 (.039) |
| DC | 69,32 (2.729) | 55,42 (2.182) | 63,50 (2.500) | 8,36 (.329) | 12,55 (.494) | 10,82 (.426) | — | 6,84 (.269) | — | 1,52 (.060) | 0,99 (.039) |
| DD | 66,93 (2.635) | 52,81 (2.079) | 61,11 (2.406) | 11,07 (.436) | 15,37 (.605) | 10,82 (.426) | — | 6,84 (.269) | — | 1,52 (.060) | 0,99 (.039) |



Dimensions are shown in mm (inch)
Dimensions subject to change

## Solder Cup Termination (Stamped) with Tin Shells

Receptacle

Part Numbers

| Shell Size | Layout | Through Hole |
|---|---|---|
| DE | 9 | ZDE9S |
| DA | 15 | ZDA15S |
| DB | 25 | ZDB25S |
| DC | 37 | ZDC37S |
| DD | 50 | ZDD50S |

Selection Guide
For Product Features, Specifications, Materials and Finishes, see pages 30-31.

Reader's Resource
For contact cavity arrangements, see page 224.
For panel cutouts, see page 221.
For hardware views (Standard), see page 226.

Engaging Face

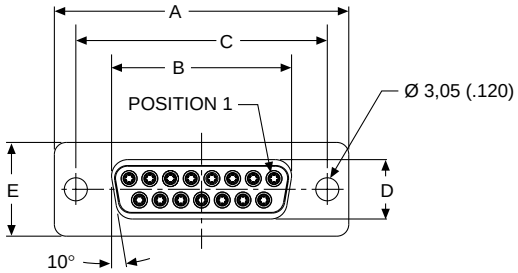


DD Configuration

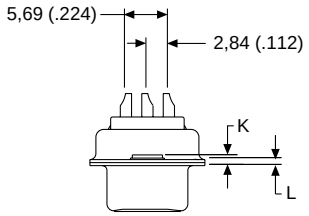


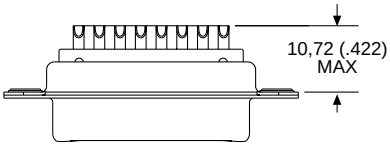


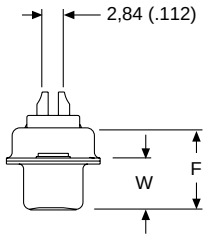


Dimensions

| Shell Size | A ±0,38 (.015) | B ±0,13 (.005) | C ±0,13 (.005) | D ±0,13 (.005) | E ±0,38 (.015) | F ±0,25 (.010) | W ±0,38 (.015) | K ±0,318 (.0125) | L ±0,25 (.010) |
|---|---|---|---|---|---|---|---|---|---|
| DE | 30,81 (1.213) | 16,33 (.643) | 24,99 (.984) | 7,90 (.311) | 12,55 (.494) | 10,90 (.429) | 6,94 (.273) | 1,206 (.0475) | 0,76 (.030) |
| DA | 39,14 (1.541) | 24,66 (.971) | 33,32 (1.312) | 7,90 (.311) | 12,55 (.494) | 10,90 (.429) | 6,94 (.273) | 1,206 (.0475) | 0,76 (.030) |
| DB | 53,04 (2.088) | 38,38 (1.511) | 47,04 (1.852) | 7,90 (.311) | 12,55 (.494) | 10,90 (.429) | 6,94 (.273) | 1,206 (.0475) | 0,76 (.030) |
| DC | 69,32 (2.729) | 54,84 (2.159) | 63,50 (2.500) | 7,90 (.311) | 12,55 (.494) | 10,90 (.429) | 6,94 (.273) | 1,206 (.0475) | 0,76 (.030) |
| DD | 66,93 (2.635) | 52,42 (2.064) | 61,11 (2.406) | 10,74 (.423) | 15,37 (.605) | 10,90 (.429) | 6,94 (.273) | 1,206 (.0475) | 0,76 (.030) |

## Crimp Connectors without Contacts

Plug

Part Numbers

| Shell Size | Layout | Through Hole |
|---|---|---|
| DE | 9 | DEA9PK87FO |
| DA | 15 | DAA15PK87FO |
| DB | 25 | DBA25PK87FO |
| DC | 37 | DCA37PK87FO |

Note: For crimp (size 20) contacts and tooling, see pages 83 & 275.

Selection Guide
For Product Features, Specifications, Materials and Finishes, see pages 30-31.

Reader's Resource
For contact cavity arrangements, see page 224.
For panel cutouts, see page 221.
For hardware views (Standard), see page 226.

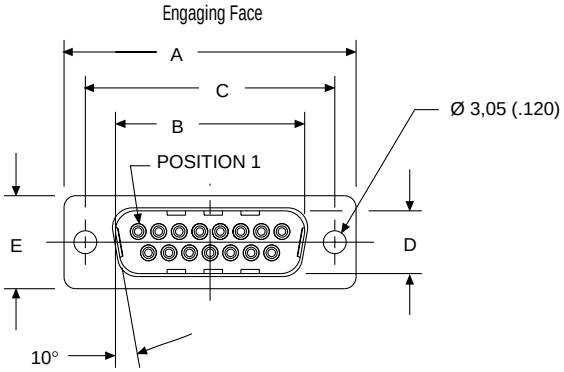


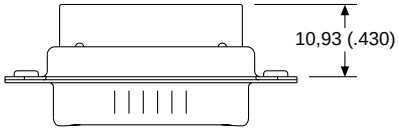


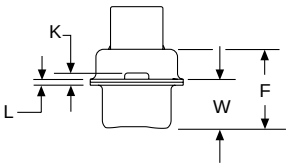


Dimensions

| Shell Size | A ±0,38 (.015) | B ±0,13 (.005) | C ±0,13 (.005) | D ±0,13 (.005) | E ±0,38 (.015) | F ±0,25 (.010) | W ±0,368 (.0145) | W ±0,41 (.016) | K ±0,317 (.0125) | K ±0,25 (.010) | L ±0,25 (.010) |
|---|---|---|---|---|---|---|---|---|---|---|---|
| DE | 30,81 (1.213) | 16,92 (.666) | 24,99 (.984) | 8,36 (.329) | 12,55 (.494) | 10,72 (.422) | 6,693 (.2635) | — | 1,206 (.0475) | — | 0,76 (.030) |
| DA | 39,14 (1.541) | 25,25 (.994) | 33,32 (1.312) | 8,36 (.329) | 12,55 (.494) | 10,72 (.422) | 6,693 (.2635) | — | 1,206 (.0475) | — | 0,76 (.030) |
| DB | 53,04 (2.088) | 38,96 (1.534) | 47,04 (1.852) | 8,36 (.329) | 12,55 (.494) | 10,82 (.426) | — | 6,84 (.269) | — | 1,52 (.060) | 0,99 (.039) |
| DC | 69,32 (2.729) | 55,42 (2.182) | 63,50 (2.500) | 8,36 (.329) | 12,55 (.494) | 10,82 (.426) | — | 6,84 (.269) | — | 1,52 (.060) | 0,99 (.039) |
| DD | 66,93 (2.635) | 52,81 (2.079) | 61,11 (2.406) | 11,07 (.436) | 15,37 (.605) | 10,82 (.426) | — | 6,84 (.269) | — | 1,52 (.060) | 0,99 (.039) |



Dimensions are shown in mm (inch)
Dimensions subject to change

## Crimp Connectors without Contacts

Receptacle

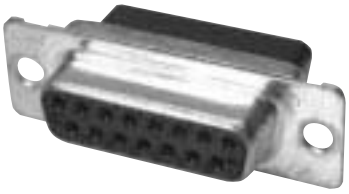

### Part Numbers

| Shell Size | Layout | Through Hole |
|---|---|---|
| DE | 9 | DEA9SA197FO |
| DA | 15 | DAA15SA197FO |
| DB | 25 | DBA25SA197FO |
| DC | 37 | DCA37SA197FO |

Note: For crimp (size 20) contacts and tooling, see pages 83 & 275.

Selection Guide
For Product Features, Specifications, Materials and Finishes, see pages 30-31.

Reader's Resource
For contact cavity arrangements, see page 224.
For panel cutouts, see page 221.
For hardware views (Standard), see page 226.

Engaging Face

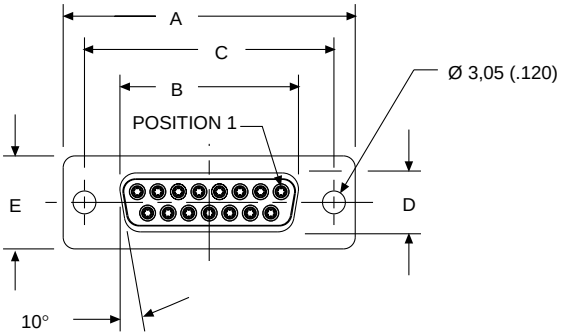


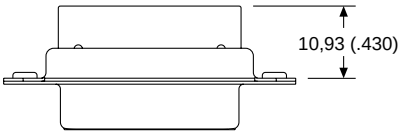


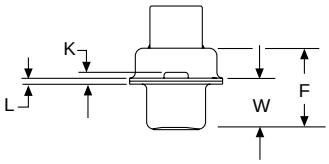


### Dimensions

| Shell Size | A ±0,38 (.015) | B ±0,13 (.005) | C ±0,13 (.005) | D ±0,13 (.005) | E ±0,38 (.015) | F ±0,25 (.010) | W ±0,38 (.015) | K ±0,318 (.0125) | L ±0,25 (.010) |
|---|---|---|---|---|---|---|---|---|---|
| DE | 30,81 (1.213) | 16,33 (.643) | 24,99 (.984) | 7,90 (.311) | 12,55 (.494) | 10,90 (.429) | 6,94 (.273) | 1,206 (.0475) | 0,76 (.030) |
| DA | 39,14 (1.541) | 24,66 (.971) | 33,32 (1.312) | 7,90 (.311) | 12,55 (.494) | 10,90 (.429) | 6,94 (.273) | 1,206 (.0475) | 0,76 (.030) |
| DB | 53,04 (2.088) | 38,38 (1.511) | 47,04 (1.852) | 7,90 (.311) | 12,55 (.494) | 10,90 (.429) | 6,94 (.273) | 1,206 (.0475) | 0,76 (.030) |
| DC | 69,32 (2.729) | 54,84 (2.159) | 63,50 (2.500) | 7,90 (.311) | 12,55 (.494) | 10,90 (.429) | 6,94 (.273) | 1,206 (.0475) | 0,76 (.030) |
| DD | 66,93 (2.635) | 52,42 (2.064) | 61,11 (2.406) | 10,74 (.423) | 15,37 (.605) | 10,90 (.429) | 6,94 (.273) | 1,206 (.0475) | 0,76 (.030) |

## Discrete Wire IDC

Plug

Selection Guide
For Product Features, Specifications, Materials and Finishes, see pages 30-31.

Reader's Resource
For contact cavity arrangements, see page 224.
For panel cutouts, see page 221.
For hardware views (European), see page 227.

Part Numbers

| Shell Size | Layout | Through Hole | Clinch Nut #4-40 UNC | Through Hole & Shield Can Kit | Clinch Nut #4-40 UNC & Shield Can Kit |
|---|---|---|---|---|---|
| DE | 9 | DEW9P* | DEWE9P* | DEW9P*G | DEWE9P*G |
| DA | 15 | DAW15P* | DAWE15P* | DAW15P*G | DAWE15P*G |
| DB | 25 | DBW25P* | DBWE25P* | DBW25P*G | DBWE25P*G |
| DC | 37 | DCW37P* | DCWE37P* | DCW37P*G | DCWE37P*G |

Note: *Insert contact type. Example: DEW9P1.
For contacts with 0,76 μm gold add -A176. Example: DEW9P1-A176.
For shield can kit, see page 40.

| Contact Types* | Wire Accommodation |
|---|---|
| 1 | 28 AWG/30 AWG |
| 2 | 22 AWG/26 AWG |
| 3 | 20 AWG/22 AWG |

For more information, see pages 40-41.

Engaging Face

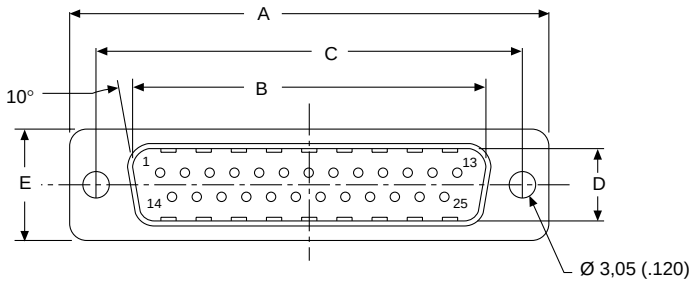


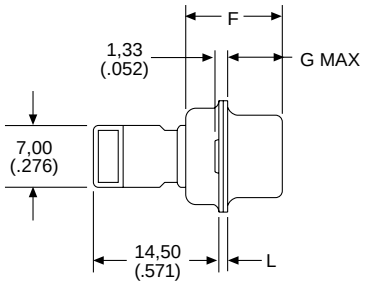


Rear Face

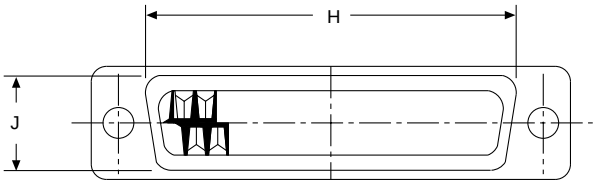


Dimensions

| Shell Size | Layout | A ±0,38 (.015) | B ±0,12 (.005) | C ±0,12 (.005) | D ±0,13 (.005) | E ±0,38 (.015) | F ±0,25 (.010) | G max. | H ±0,25 (.010) | J ±0,25 (.010) | L ±0,25 (.010) |
|---|---|---|---|---|---|---|---|---|---|---|---|
| DEW | 9 | 30,81 (1.213) | 16,91 (.666) | 24,99 (.984) | 8,35 (.329) | 12,55 (.494) | 10,71 (.422) | 6,05 (.238) | 19,27 (.759) | 10,71 (.422) | 0,76 (.030) |
| DAW | 15 | 39,14 (1.541) | 25,54 (.994) | 33,32 (1.312) | 8,35 (.329) | 12,55 (.494) | 10,71 (.422) | 6,05 (.238) | 27,50 (1.083) | 10,71 (.422) | 0,76 (.030) |
| DBW | 25 | 53,03 (2.048) | 38,96 (1.534) | 47,04 (1.852) | 8,35 (.329) | 12,55 (.494) | 10,82 (.426) | 5,99 (.236) | 41,27 (1.625) | 10,71 (.422) | 0,99 (.039) |
| DCW | 37 | 69,32 (2.729) | 55,42 (2.182) | 63,50 (2.500) | 8,35 (.329) | 12,55 (.494) | 10,82 (.426) | 5,99 (.236) | 57,70 (2.272) | 10,71 (.422) | 0,99 (.039) |



Dimensions are shown in mm (inch)
Dimensions subject to change

## Discrete Wire IDC

### Receptacle

### Selection Guide

For Product Features, Specifications, Materials and Finishes, see pages 30-31.

### Reader's Resource

For contact cavity arrangements, see page 224.
For panel cutouts, see page 221.
For hardware views (European), see page 227.

### Part Numbers

| Shell Size | Layout | Through Hole | Clinch Nut #4-40 UNC | Through Hole & Shield Can Kit | Clinch Nut #4-40 UNC & Shield Can Kit |
|---|---|---|---|---|---|
| DE | 9 | DEW9S* | DEWE9S* | DEW9S*G | DEWE9S*G |
| DA | 15 | DAW15S* | DAWE15S* | DAW15S*G | DAWE15S*G |
| DB | 25 | DBW25S* | DBWE25S* | DBW25S*G | DBWE25S*G |
| DC | 37 | DCW37S* | DCWE37S* | DCW37S*G | DCWE37S*G |

Note: *Insert contact type. Example: DEW9S1.
For contacts with 0,76 µm gold add -A176. Example: DEW9S1-A176.
For shield can kit, see page 40.

| Contact Types* | Wire Accommodation |
|---|---|
| 1 | 28 AWG/30 AWG |
| 2 | 22 AWG/26 AWG |
| 3 | 20 AWG/22 AWG |

For more information, see pages 40-41.

Engaging Face

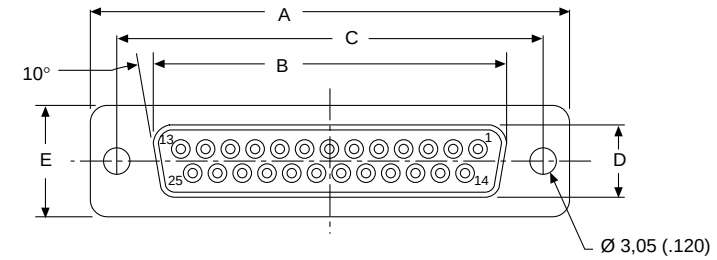


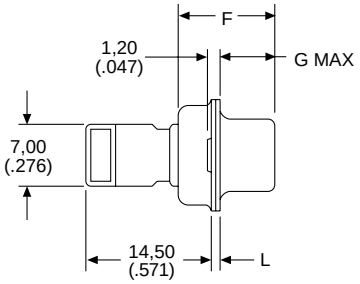


Rear Face

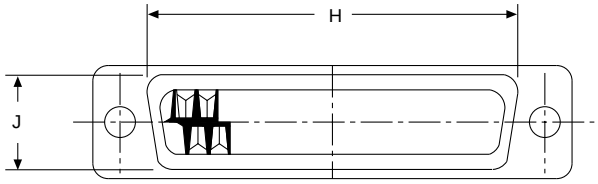


### Dimensions

| Shell Size | Layout | A ±0,38 (.015) | B ±0,12 (.005) | C ±0,12 (.005) | D ±0,13 (.005) | E ±0,38 (.015) | F ±0,25 (.010) | G max. | H ±0,25 (.010) | J ±0,25 (.010) | L ±0,25 (.010) |
|---|---|---|---|---|---|---|---|---|---|---|---|
| DEW | 9 | 30,81 (1.213) | 16,33 (.643) | 24,99 (.984) | 7,90 (.311) | 12,55 (.494) | 10,89 (.429) | 6,30 (.248) | 19,27 (.759) | 10,71 (.422) | 0,76 (.030) |
| DAW | 15 | 39,14 (1.541) | 24,66 (.971) | 33,32 (1.312) | 7,90 (.311) | 12,55 (.494) | 10,89 (.429) | 6,30 (.248) | 27,50 (1.083) | 10,71 (.422) | 0,76 (.030) |
| DBW | 25 | 53,03 (2.048) | 38,38 (1.511) | 47,04 (1.852) | 7,90 (.311) | 12,55 (.494) | 10,89 (.429) | 6,30 (.248) | 41,27 (1.625) | 10,71 (.422) | 0,76 (.030) |
| DCW | 37 | 69,32 (2.729) | 55,84 (2.159) | 63,50 (2.500) | 7,90 (.311) | 12,55 (.494) | 10,89 (.429) | 6,30 (.248) | 57,70 (2.272) | 10,71 (.422) | 0,76 (.030) |

## Shield Can Kit

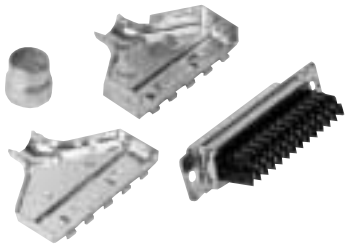

### Materials and Finishes

| Shield Can and Ferrule | |
|---|---|
| Material: | Steel |
| Finish: | Tin |

### Ferrule

| D*W | Ø Cable | Ferrule Ø A | Ferrule Part Number | Crimp Tool Part Number | Crimp Tool Position |
|---|---|---|---|---|---|
| DEW9G | 4,8-5,5 | 6,25 (.246) | 304-8810-000 | D115433-1 | B |
| | 5,5-6,2 | 6,25 (.246) | 304-8810-000 | D115433-1 | A |
| | 6,2-7,2 | 8,20 (.323) | 304-8811-000 | D115433-2 | B |
| | 7,2-8,2 | 8,20 (.323) | 304-8811-000 | D115433-2 | A |
| | 8,2-9,5 | 11,50 (.452) | 304-8812-000 | D115433-3 | B |
| | 9,5-11,1 | 11,50 (.452) | 304-8813-000 | D115433-3 | A |
| DBW25G | 4,8-5,5 | 6,25 (.246) | 304-8810-000 | D115433-1 | B |
| | 5,5-6,2 | 6,25 (.246) | 304-8810-000 | D115433-1 | A |
| | 6,2-7,2 | 8,20 (.323) | 304-8811-000 | D115433-2 | B |
| | 7,2-8,2 | 8,20 (.323) | 304-8811-000 | D115433-2 | A |
| | 8,2-9,5 | 11,50 (.452) | 304-8812-000 | D115433-3 | B |
| | 9,5-11,1 | 11,50 (.452) | 304-8813-000 | D115433-3 | A |

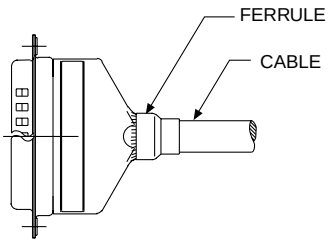


Ferrule

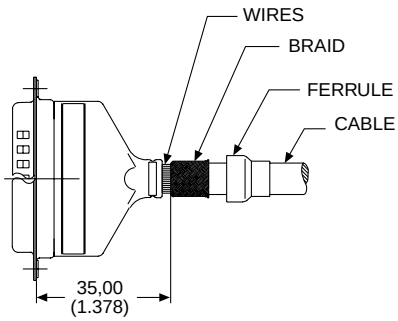


Wire Trim Dimensions

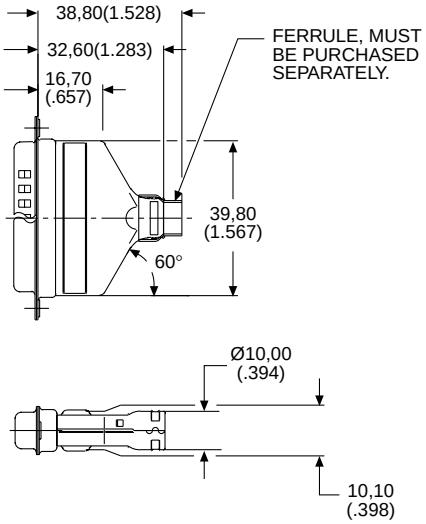


Crimp Tool Positions

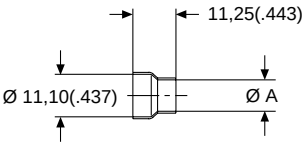


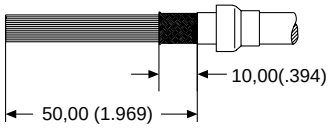


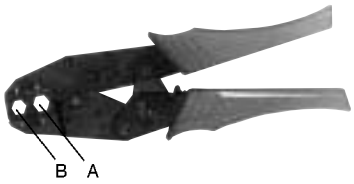




ITT Cannon

Dimensions are shown in mm (inch)
Dimensions subject to change

## Discrete Wire IDC Contacts

### Contacts

| Contact Types | 1 | 2 | 3 |
|---|---|---|---|
| Pin | 330-8753-101 | 330-8753-102 | 330-8753-103 |
| Socket | 330-8754-101 | 330-8754-102 | 330-8754-103 |

### Solid Cable

| Wire Size | 28 AWG | 30 AWG | 22 AWG | 24 AWG | 26 AWG | 20 AWG | 22 AWG |
|---|---|---|---|---|---|---|---|
| Section $mm^2$ | 0.08 | 0.05 | 0.34 | 0.22 | 0.12 | 0.60 | 0.34 |
| Internal dia. mm max | 0.32 | 0.26 | 0.62 | 0.51 | 0.40 | 0.88 | 0.62 |
| External dia. mm max | 1.30 | 1.20 | 1.45 | 1.45 | 1.40 | 1.45 | 1.45 |

### Stranded Cable

| Wire Size | 28 AWG | 30 AWG | 22 AWG | 24 AWG | 26 AWG | 20 AWG | 22 AWG |
|---|---|---|---|---|---|---|---|
| Section $mm^2$ | 0.09 | 0.05 | 0.34 | 0.22 | 0.12 | 0.60 | 0.34 |
| Composition | 7 x 0.13 | 7 x 0.10 | 7 x 0.25 | 7 x 0.20 | 7 x 0.15 | 19 x 0.20 | 7 x 0.25 |
| Internal cable dia. mm max | 0.40 | 0.30 | 0.75 | 0.60 | 0.45 | 0.97 | 0.75 |
| External wire dia. mm max | 1.30 | 1.20 | 1.45 | 1.45 | 1.40 | 1.45 | 1.45 |

## Insulation Displacement Connection Concept

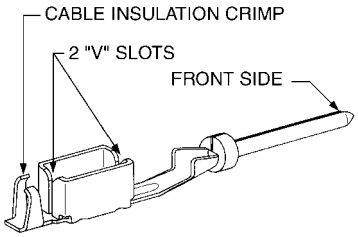


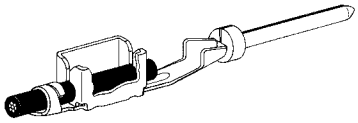

## Tooling

Extraction Tool

| Part Number |
|---|
| DW115394 |

Hand Crimp Tool

| Part Number |
|---|
| Standard Tool: DW115394-1 |
| Automatic Tool: DW115394-2 |
| Tool Support: DW115394-20 |

Row by Row Pneumatic Press

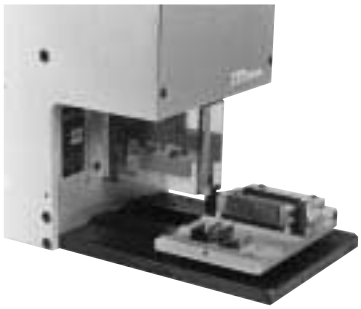

| Part Number |
|---|
| DW115394-501 |

Selection Index Page

Combo D®
An Introduction . . . 43
Combo D® PCB Connectors with Coaxial 75 Ohm Contacts (50 Ohm Option)
Coaxial 90° — Standard Footprint .318♦ or .283♦♦ inch (Sizes DE-DC) . . . 44
Coaxial 90° — Standard Footprint .489♦ or .454♦♦ inch (Size DD) . . . 46
13C3 Special — Receptacle Only . . . 48
3C3 Shielded Special — Receptacle Only . . . 49
Coaxial 90° — European Footprint 10,2♦ or 9,4♦♦ mm (Sizes DE-DC) . . . 50
Coaxial Straight — Standard PC Tails (Sizes DE-DC) . . . 52
Coaxial Straight — Standard PC Tails (Size DD) . . . 54
Coaxial Straight — European PC Tails (Sizes DE-DC) . . . 56
Coaxial Straight — European PC Tails (Size DD) . . . 58
Combo D® PCB Connectors with High Power Contacts
40 A High Power 90° — Standard Footprint .489♦ or .454♦♦ inch (Sizes DE-DC) . . . 60
40 A High Power 90° — Standard Footprint .489♦ or .454♦♦ inch (Size DD) . . . 62
40 A High Power 90° — European Footprint 10,2♦ or 9,4♦♦ mm (Sizes DE-DC) . . . 64
40 A High Power Straight — Standard PC Tails (Sizes DE-DC) . . . 66
40 A High Power Straight — Standard PC Tails (Size DD) . . . 68
40 A High Power Straight — European PC Tails (Sizes DE-DC) . . . 70
40 A High Power Straight — European PC Tails (Size DD) . . . 72
Combo D® PCB Connectors with (Size 20) Signal Contacts Only
90° — European Footprint 10,2♦ or 9,4♦♦ mm (Sizes DE-DD) . . . 74
Straight PC Tails — European (Sizes DE-DD) . . . 76
Solder Cup (Sizes DE-DD) . . . 78
Combo D® PCB Crimp Connectors without Contacts (Sizes DA-DD) . . . 80
Loose Contacts and Tooling
Shield Cans and Crimp Tooling . . . 82
Crimp (Size 20) Contacts and Tooling . . . 83
Cable (Size 8) Loose Contacts
Coaxial 75 Ohm and Tooling — Straight Stamped Crimp/Crimp . . . 84
Coaxial 75 Ohm and Tooling — 90° Crimp Braid/Solder Center Contact . . . 85
Coaxial 50 Ohm — Straight Crimp or Solder Braid . . . 86
Coaxial 50 Ohm — 90° Crimp or Solder Braid . . . 87
Insertion/Extraction Instructions for Coaxial, High Power and High Voltage Contacts and Tooling . . . 88
Coaxial Assembly Instructions and Crimp Tooling . . . 89
High Power and Tooling — Straight Solder or Crimp . . . 90
High Voltage — Straight / 90° . . . 91
PCB (Size 8) Loose Contacts
Coaxial 75 Ohm — Straight / 90° . . . 92
High Power — Straight / 90° . . . 93
High Voltage — Straight . . . 94
PCB Guide Pin and Socket . . . 95

♦ Connector footprint measured from front shell.
♦♦ Connector footprint measured from rear shell.



Dimensions are shown in mm (inch)
Dimensions subject to change

Combination D Subminiature connectors offer the advantages of an industry standard shield I/O interconnect, with the flexibility of a customized special, designed for any application.

This connector system is ideal for applications that require optimization of space while improving overall shielding. Combo D® accomplishes this by combining multiple interconnect types into one fully shielded product, decreasing the number I/O interfaces and reducing the possibility of EMI/RFI leakage.

By continually investing in engineering and manufacturing technology, ITT Cannon has improved the performance and features of this popular product. This catalog contains our latest efforts to meet the global requirements of the commercial electronics industry with a flexible, reliable and cost effective connector solution.

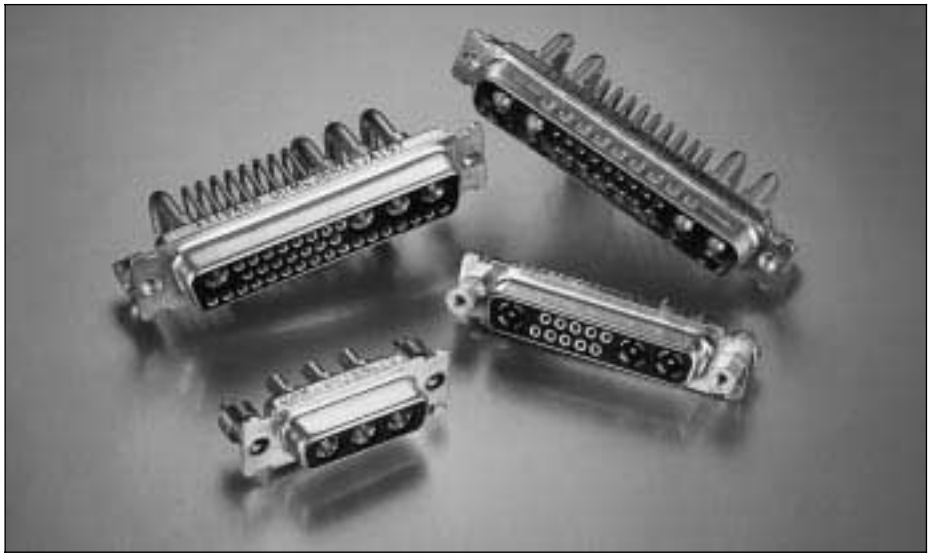

### Applications

Video Coaxial Transmission (75 Ω)
RF and Telecom Transmission (50 Ω)
Power Interconnects (Up to 40 A)

### Product Features

Standard and European Footprints
Pre-Installed 75 Ω/50 Ω Coaxial or High Power contacts (One Part Number)
Vertical Standoffs or 90° Brackets
90° or Straight PCB
PC Boards up to 3,2 (.125) Thick
PCB Variants Available with Boardlocks and/or Screw Locks (#4-40 or M3)

## Specifications

| | |
|---|---|
| Temperature Rating | −55°C to 125°C |
| Signal Contact Current Rating | 7.5 A current capacity |
| Signal Contact Resistance | 55 millivolt max. at 7.5 test current |
| Signal Contact Dielectric Withstanding Voltage | 1250 VAC at Sea Level |
| Coaxial Current Rating | 5 A |
| Coaxial Dielectric Withstanding Voltage | 1000 VAC at Sea Level |
| Coaxial Impedance | 75 Ω or 50 Ω |
| Coaxial VSWR | Less than 1.30 + .03F for F up to 500 MHz |
| Coaxial Insertion Loss | .3dB loss at 500 MHz |
| High Power Current Rating | Up to 40 A |
| High Power Dielectric Withstanding Voltage | 1000 VAC at Sea Level |
| High Voltage Current Rating | 5 A |
| High Voltage Contact Dielectric Withstanding Voltage | 2800 V at Sea Level |

## Materials and Finishes

### Connector Assembly

| Description | Material | Finish/Treatment |
|---|---|---|
| Shell | Steel | Tin |
| Insulator | Black Polyester, UL 94V-0 | None |
| Pin Contact | Copper Alloy | Gold over Nickel |
| Socket Contact | Copper Alloy | Gold over Nickel in mating area, Tin on balance |
| Standoff | Stainless Steel | Passivated |
| Bracket | Steel | Tin |
| Rivnut | Steel | Tin |
| Boardlock | Copper Alloy | Tin |

### Coaxial/High Power/High Voltage Contact Assemblies

| | | |
|---|---|---|
| Contacts and outer shells | Copper Alloy | Gold over Nickel (Tin on coax ground PC tails) |
| Ring, Retaining | Copper Alloy | Nickel |
| Insulator (Coaxial only) | Teflon | None |
| Insulator (High Voltage only) | Thermoplastic | None |

U.L. File Number: E8572

## Coaxial 90° — Standard Footprint .318♦ or .283 inch♦♦ (Sizes DE-DC)

Plug

Reader's Resource
For contact cavity arrangements, see page 222.
For P.C. hole patterns, see pages 228-229.
For panel cutouts, see page 221.
For hardware views (Standard), see page 226.
For alternate bracket configuration (when connectors are supplied without boardlocks), see page 226.
For alternate 50 Ohm coaxial configuration, see page 225.

75 Ohm Part Numbers* with Metal Bracket and Rivnut #4-40 UNC

| Shell Size | Layout | Part Number Without Screw Locks Without Boardlocks | Part Number Without Screw Locks With Boardlocks | Part Number With Screw Locks Without Boardlocks | Part Number With Screw Locks With Boardlocks |
|---|---|---|---|---|---|
| DE | 5W1 | DEMP5C1PJK87 | DEMC5C1PJK87 | DEMD5C1PJK87 | DEMG5C1PJK87 |
| DA | 7W2 | DAMP7C2PJK87 | DAMC7C2PJK87 | DAMD7C2PJK87 | DAMG7C2PJK87 |
| DA | 11W1 | DAMP11C1PJK87 | DAMC11C1PJK87 | DAMD11C1PJK87 | DAMG11C1PJK87 |
| DA | 3W3 | DAMP3C3PJK87 | DAMC3C3PJK87 | DAMD3C3PJK87 | DAMG3C3PJK87 |
| DA | 3WK3♣ | DAMP3CK3PJK87TM | DAMC3CK3PJK87TM | DAMD3CK3PJK87TM | DAMG3CK3PJK87TM |
| DB | 5W5 | DBMP5C5PJK87 | DBMC5C5PJK87 | DBMD5C5PJK87 | DBMG5C5PJK87 |
| DB | 9W4 | DBMP9C4PJK87 | DBMC9C4PJK87 | DBMD9C4PJK87 | DBMG9C4PJK87 |
| DB | 13W3 | DBMP13C3PJK87 | DBMC13C3PJK87 | DBMD13C3PJK87 | DBMG13C3PJK87 |
| DB | 17W2 | DBMP17C2PJK87 | DBMC17C2PJK87 | DBMD17C2PJK87 | DBMG17C2PJK87 |
| DB | 21W1 | DBMP21C1PJK87 | DBMC21C1PJK87 | DBMD21C1PJK87 | DBMG21C1PJK87 |
| DC | 8W8 | DCMP8C8PJK87 | DCMC8C8PJK87 | DCMD8C8PJK87 | DCMG8C8PJK87 |
| DC | 13W6 | DCMP13C6PJK87 | DCMC13C6PJK87 | DCMD13C6PJK87 | DCMG13C6PJK87 |
| DC | 17W5 | DCMP17C5PJK87 | DCMC17C5PJK87 | DCMD17C5PJK87 | DCMG17C5PJK87 |
| DC | 21WA4 | DCMP21CA4PJK87 | DCMC21CA4PJK87 | DCMD21CA4PJK87 | DCMG21CA4PJK87 |
| DC | 25W3 | DCMP25C3PJK87 | DCMC25C3PJK87 | DCMD25C3PJK87 | DCMG25C3PJK87 |
| DC | 27W2 | DCMP27C2PJK87 | DCMC27C2PJK87 | DCMD27C2PJK87 | DCMG27C2PJK87 |

Notes: * For 50 Ohm Coaxial substitute X for C. Example: DEMP5X1PJK87
For contacts with 30 microinches gold substitute K127 for K87. Example: DEMP5C1PJK127
For DD shell sizes, see page 46.
♣ Keyed.

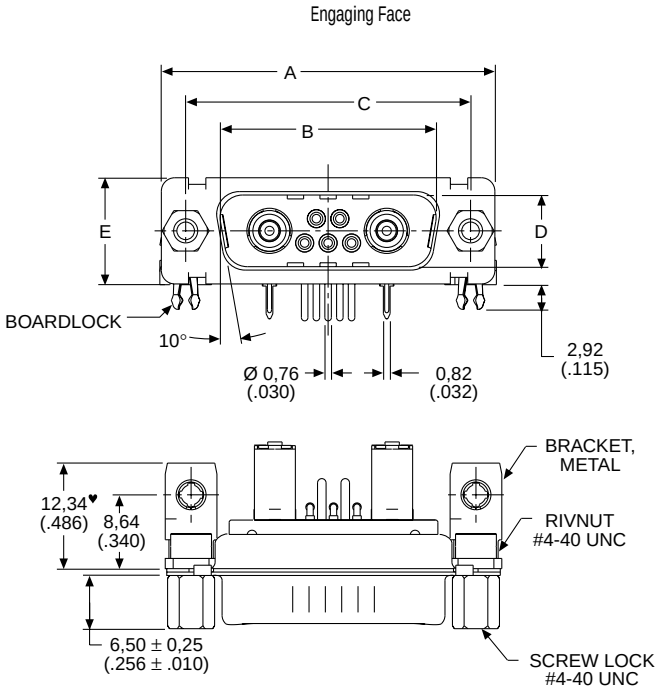


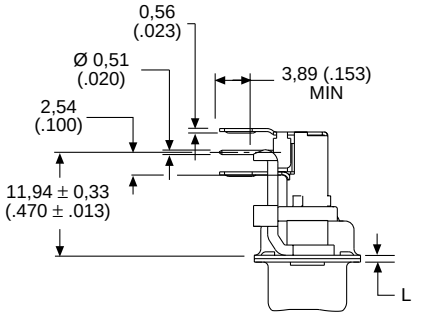


Screw lock, boardlock, and signal contacts removed for clarity

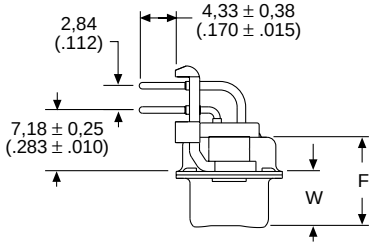


Screw lock, boardlock, and coaxial contact removed for clarity

Note: ♥ Dimension varies with alternate bracket configuration, see Reader's Resource page 226.

Dimensions

| Shell Size | A ±0,38 (.015) | B ±0,13 (.005) | C ±0,13 (.005) | D ±0,13 (.005) | E ±0,38 (.015) | F ±0,25 (.010) | W ±0,368 (.0145) | W ±0,41 (.016) | L ±0,25 (.010) |
|---|---|---|---|---|---|---|---|---|---|
| DE | 30,81 (1.213) | 16,92 (.666) | 24,99 (.984) | 8,36 (.329) | 12,55 (.494) | 10,72 (.422) | 6,693 (.2635) | — | 0,76 (.030) |
| DA | 39,14 (1.541) | 25,25 (.994) | 33,32 (1.312) | 8,36 (.329) | 12,55 (.494) | 10,72 (.422) | 6,693 (.2635) | — | 0,76 (.030) |
| DB | 53,04 (2.088) | 38,96 (1.534) | 47,04 (1.852) | 8,36 (.329) | 12,55 (.494) | 10,82 (.426) | — | 6,84 (.269) | 0,99 (.039) |
| DC | 69,32 (2.729) | 55,42 (2.182) | 63,50 (2.500) | 8,36 (.329) | 12,55 (.494) | 10,82 (.426) | — | 6,84 (.269) | 0,99 (.039) |

♦ Connector footprint measured from the front shell.
♦♦ Connector footprint measured from the rear shell.



Dimensions are shown in mm (inch)
Dimensions subject to change

## Coaxial 90° — Standard Footprint .318♦ or .283 inch♦♦ (Sizes DE-DC)

Receptacle

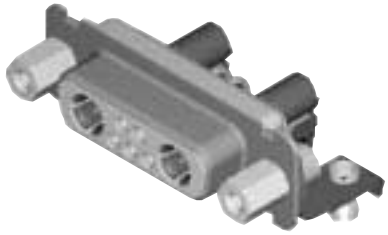

Reader's Resource
For contact cavity arrangements, see page 223.
For P.C. hole patterns, see pages 231-232.
For panel cutouts, see page 221.
For hardware views (Standard), see page 226.
For alternate bracket configuration (when connectors are supplied without boardlocks), see page 226.
For alternate 50 Ohm coaxial configuration, see page 225.

75 Ohm Part Numbers* with Metal Bracket and Rivnut #4-40 UNC

| Shell Size | Layout | Part Number Without Screw Locks Without Boardlocks | Part Number Without Screw Locks With Boardlocks | Part Number With Screw Locks Without Boardlocks | Part Number With Screw Locks With Boardlocks |
|---|---|---|---|---|---|
| DE | 5W1 | DEMP5C1SJA197 | DEMC5C1SJA197 | DEMD5C1SJA197 | DEMG5C1SJA197 |
| DA | 7W2 | DAMP7C2SJA197 | DAMC7C2SJA197 | DAMD7C2SJA197 | DAMG7C2SJA197 |
| DA | 11W1 | DAMP11C1SJA197 | DAMC11C1SJA197 | DAMD11C1SJA197 | DAMG11C1SJA197 |
| DA | 3W3 | DAMP3C3SJA197 | DAMC3C3SJA197 | DAMD3C3SJA197 | DAMG3C3SJA197 |
| DA | 3WK3♣ | DAMP3CK3SJA197TM | DAMC3CK3SJA197TM | DAMD3CK3SJA197TM | DAMG3CK3SJA197TM |
| DB | 5W5 | DBMP5C5SJA197 | DBMC5C5SJA197 | DBMD5C5SJA197 | DBMG5C5SJA197 |
| DB | 9W4 | DBMP9C4SJA197 | DBMC9C4SJA197 | DBMD9C4SJA197 | DBMG9C4SJA197 |
| DB | 13W3 | DBMP13C3SJA197 | DBMC13C3SJA197 | DBMD13C3SJA197 | DBMG13C3SJA197 |
| DB | 17W2 | DBMP17C2SJA197 | DBMC17C2SJA197 | DBMD17C2SJA197 | DBMG17C2SJA197 |
| DB | 21W1 | DBMP21C1SJA197 | DBMC21C1SJA197 | DBMD21C1SJA197 | DBMG21C1SJA197 |
| DC | 8W8 | DCMP8C8SJA197 | DCMC8C8SJA197 | DCMD8C8SJA197 | DCMG8C8SJA197 |
| DC | 13W6 | DCMP13C6SJA197 | DCMC13C6SJA197 | DCMD13C6SJA197 | DCMG13C6SJA197 |
| DC | 17W5 | DCMP17C5SJA197 | DCMC17C5SJA197 | DCMD17C5SJA197 | DCMG17C5SJA197 |
| DC | 21WA4 | DCMP21CA4SJA197 | DCMC21CA4SJA197 | DCMD21CA4SJA197 | DCMG21CA4SJA197 |
| DC | 25W3 | DCMP25C3SJA197 | DCMC25C3SJA197 | DCMD25C3SJA197 | DCMG25C3SJA197 |
| DC | 27W2 | DCMP27C2SJA197 | DCMC27C2SJA197 | DCMD27C2SJA197 | DCMG27C2SJA197 |

Notes: * For 50 Ohm Coaxial substitute X for C. Example: DEMP5X1SJA197
For contacts with 30 microinches gold substitute K126 for A197. Example: DEMP5C1SJK126
For DD Shell Sizes, see page 47.
♣ Keyed.

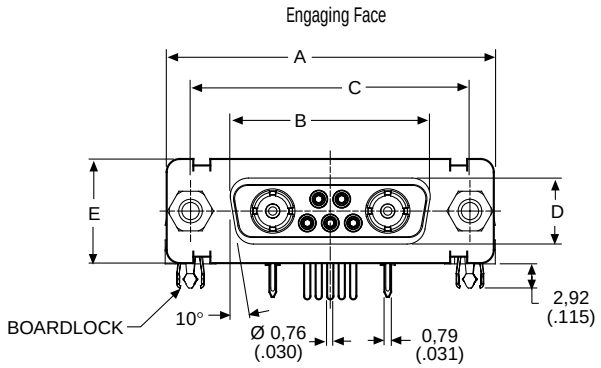


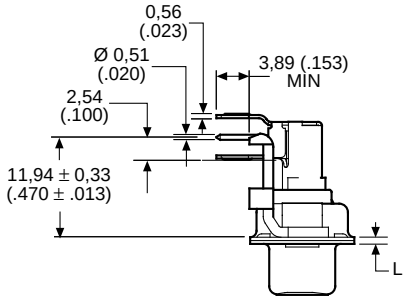


Screw lock, boardlock and signal contacts removed for clarity

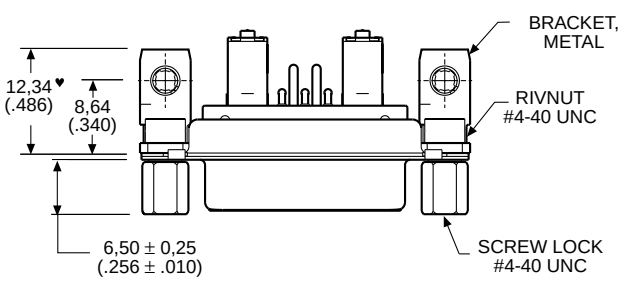


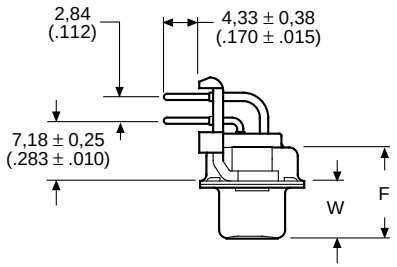


Screw lock, boardlock and coaxial contact removed for clarity

Note: ♥ Dimension varies with alternate bracket configuration, See Reader's Resource page 226.

### Dimensions

| Shell Size | A ±0,38 (.015) | B ±0,13 (.005) | C ±0,13 (.005) | D ±0,13 (.005) | E ±0,38 (.015) | F ±0,25 (.010) | W ±0,38 (.015) | L ±0,25 (.010) |
|---|---|---|---|---|---|---|---|---|
| DE | 30,81 (1.213) | 16,33 (.643) | 24,99 (.984) | 7,90 (.311) | 12,55 (.494) | 10,90 (.429) | 6,94 (.273) | 0,76 (.030) |
| DA | 39,14 (1.541) | 24,66 (.971) | 33,32 (1.312) | 7,90 (.311) | 12,55 (.494) | 10,90 (.429) | 6,94 (.273) | 0,76 (.030) |
| DB | 53,04 (2.088) | 38,38 (1.511) | 47.04 (1.852) | 7,90 (.311) | 12,55 (.494) | 10,90 (.429) | 6,94 (.273) | 0,76 (.030) |
| DC | 69,32 (2.729) | 54,84 (2.159) | 63,50 (2.500) | 7,90 (.311) | 12,55 (.494) | 10,90 (.429) | 6,94 (.273) | 0,76 (.030) |

♦ Connector footprint measured from the front shell.
♦♦ Connector footprint measured from the rear shell.

## Coaxial 90° — Standard Footprint .489♦ or .454 inch♦♦ (Size DD)

Plug

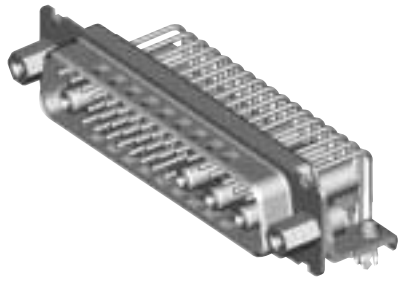

75 Ohm Part Numbers* with Metal Bracket and Rivnut #4-40 UNC

| Shell Size | Layout | Part Number Without Screw Locks Without Boardlocks | Part Number Without Screw Locks With Boardlocks | Part Number With Screw Locks Without Boardlocks | Part Number With Screw Locks With Boardlocks |
|---|---|---|---|---|---|
| DD | 24W7 | DDMP24C7PJK87 | DDMC24C7PJK87 | DDMD24C7PJK87 | DDMG24C7PJK87 |
| DD | 36W4 | DDMP36C4PJK87 | DDMC36C4PJK87 | DDMD36C4PJK87 | DDMG36C4PJK87 |
| DD | 43W2 | DDMP43C2PJK87 | DDMC43C2PJK87 | DDMD43C2PJK87 | DDMG43C2PJK87 |
| DD | 47W1 | DDMP47C1PJK87 | DDMC47C1PJK87 | DDMD47C1PJK87 | DDMG47C1PJK87 |

Notes: * For 50 Ohm Coaxial substitute X for C. Example: DDMG36X4PJK87
For contacts with 30 microinches gold substitute K127 for K87. Example: DDMP24C7PJK127

Reader's Resource

For contact cavity arrangements, see page 222.
For P.C. hole patterns, see page 230.
For panel cutouts, see page 221.
For hardware views (Standard), see page 226.
For alternate bracket configuration (when connectors are supplied without boardlocks), see page 226.
For alternate 50 Ohm coaxial configuration, see page 225.

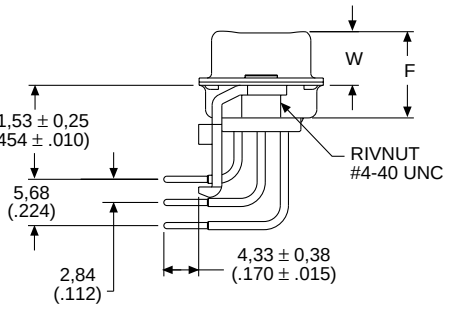


Screw lock, boardlock, and coaxial contacts removed for clarity

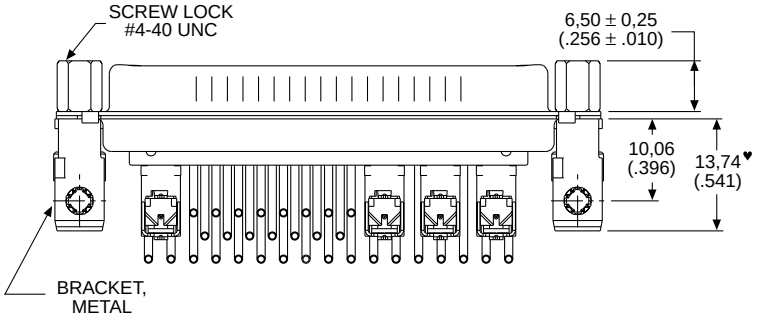


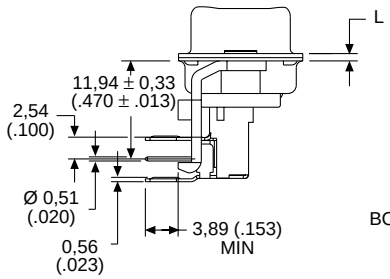


Screw lock, boardlock, and signal contacts removed for clarity

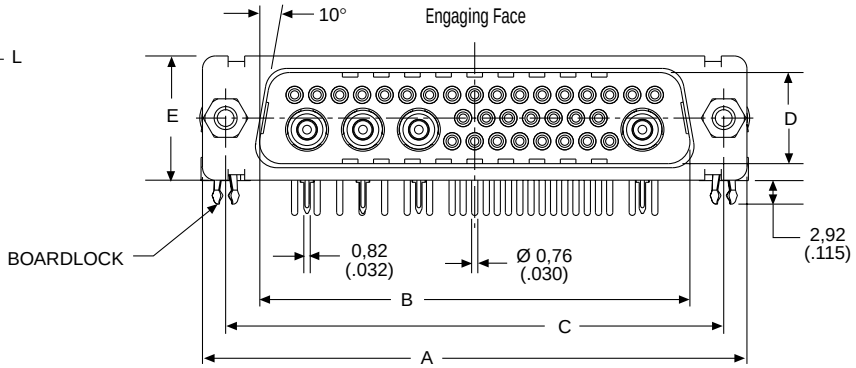


Note: ♥ Dimension varies with alternate bracket configuration, See Reader's Resource page 226.

Dimensions

| Shell Size | A ±0,38 (.015) | B ±0,13 (.005) | C ±0,13 (.005) | D ±0,13 (.005) | E ±0,38 (.015) | F ±0,25 (.010) | W ±0,41 (.016) | L ±0,25 (.010) |
|---|---|---|---|---|---|---|---|---|
| DD | 66,93 (2.635) | 52,81 (2.079) | 61,11 (2.406) | 11,07 (.436) | 15,37 (.605) | 10,82 (.426) | 6,84 (.269) | 0,99 (.039) |

♦ Connector footprint measured from the front shell.
♦♦ Connector footprint measured from the rear shell.



Dimensions are shown in mm (inch)
Dimensions subject to change

## Coaxial 90° — Standard Footprint .489♦ or .454 inch♦♦ (Size DD)

Receptacle

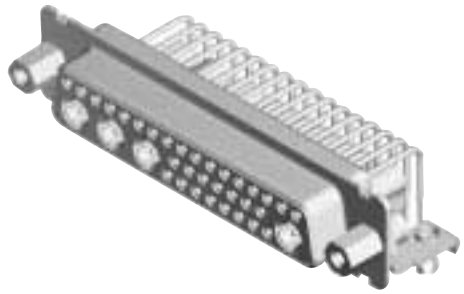

75 Ohm Part Numbers* with Metal Bracket and Rivnut #4-40 UNC

| Shell Size | Layout | Part Number Without Screw Locks Without Boardlocks | Part Number Without Screw Locks With Boardlocks | Part Number With Screw Locks Without Boardlocks | Part Number With Screw Locks With Boardlocks |
|---|---|---|---|---|---|
| DD | 24W7 | DDMP24C7SJA197 | DDMC24C7SJA197 | DDMD24C7SJA197 | DDMG24C7SJA197 |
| DD | 36W4 | DDMP36C4SJA197 | DDMC36C4SJA197 | DDMD36C4SJA197 | DDMG36C4SJA197 |
| DD | 43W2 | DDMP43C2SJA197 | DDMC43C2SJA197 | DDMD43C2SJA197 | DDMG43C2SJA197 |
| DD | 47W1 | DDMP47C1SJA197 | DDMC47C1SJA197 | DDMD47C1SJA197 | DDMG47C1SJA197 |

Notes: * For 50 Ohm Coaxial substitute X for C. Example: DDMG36X4SJA197
For contacts with 30 microinches gold substitute K126 for A197. Example: DDMP24C7SJK126

Reader's Resource

For contact cavity arrangements, see page 223.
For P.C. hole patterns, see page 233.
For panel cutouts, see page 221.
For hardware views (Standard), see page 226.
For alternate bracket configuration (when connectors are supplied without boardlocks), see page 226.
For alternate 50 Ohm coaxial configuration, see page 225.

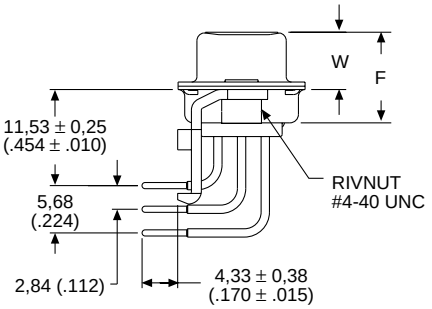


Screw lock, boardlock, and coaxial contact removed for clarity

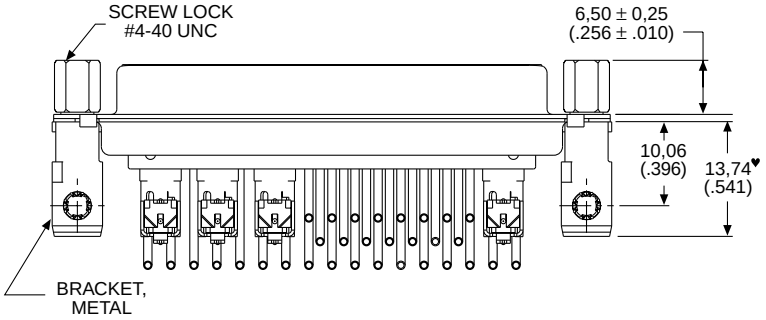


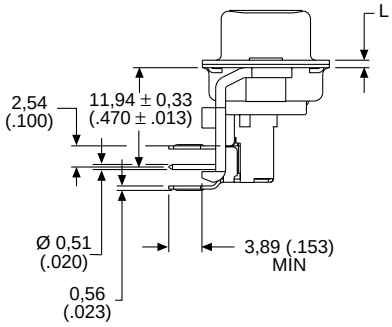


Screw lock, boardlock, and signal contacts removed for clarity

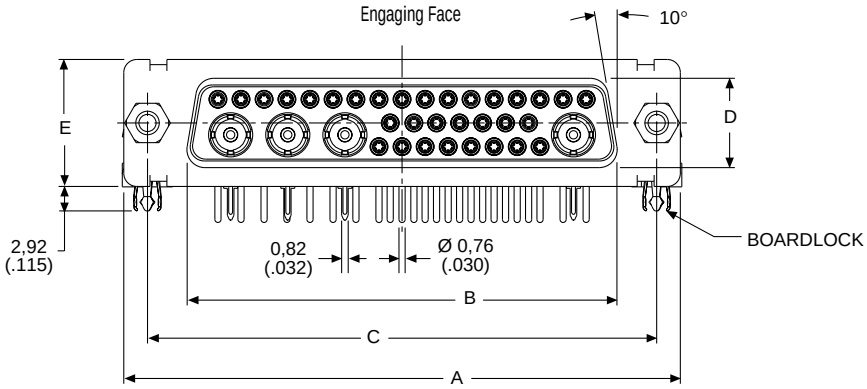


Note: ♥ Dimension varies with alternate bracket configuration, See Reader's Resource page 226.

Dimensions

| Shell Size | A ±0,38 (.015) | B ±0,13 (.005) | C ±0,13 (.005) | D ±0,13 (.005) | E ±0,38 (.015) | F ±0,25 (.010) | W ±0,38 (.015) | L ±0,25 (.010) |
|---|---|---|---|---|---|---|---|---|
| DD | 66,93 (2.635) | 52,42 (2.064) | 61,11 (2.406) | 10,74 (.423) | 15,37 (.605) | 10,90 (.429) | 6,94 (.273) | 0,76 (.030) |

♦ Connector footprint measured from the front shell.
♦♦ Connector footprint measured from the rear shell.

## 13C3 Special — Receptacle only

Receptacle

Reader's Resource
For contact cavity arrangements, see page 223.
For P.C. hole patterns, see page 236 (Rear shell REF. is 0,76 (.030) from front shell).
For panel cutouts, see page 221.

Finishes

Signal and Coaxial
Center Contact Finish: 30 μ inches Gold.

Note: For additional materials and finishes, see introduction page 43.

Part Number

DB111949-43

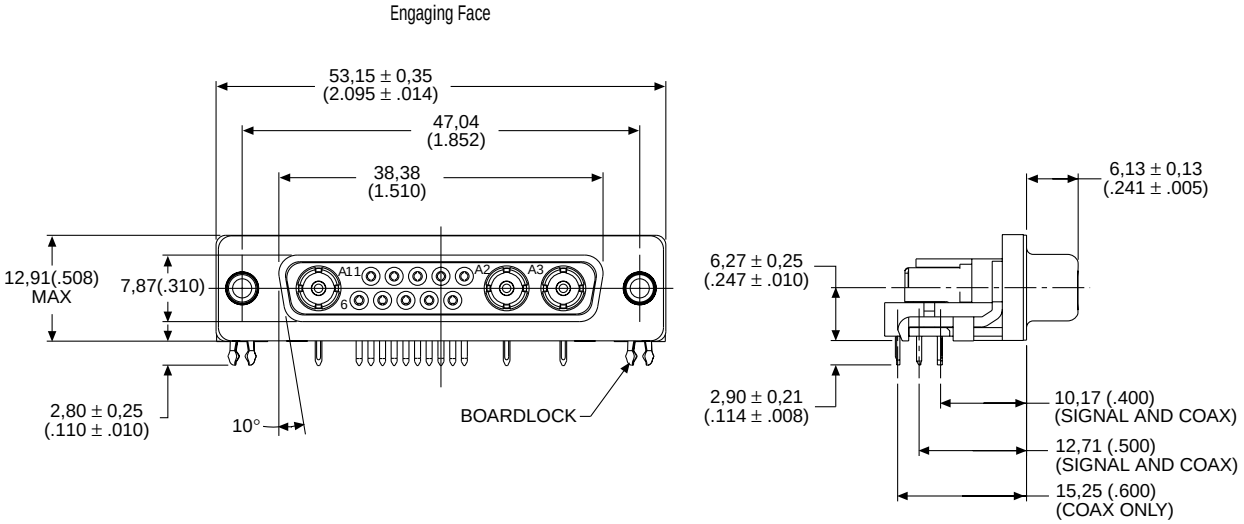




ITT Cannon

Dimensions are shown in mm (inch)
Dimensions subject to change

## 3C3 Shielded Special — Receptacle only

Receptacle

| Materials and Finishes | |
|---|---|
| Body Material: | Zinc |
| Body Finish: | Tin |
| Coaxial Center Contact Finish: | 30 μ inches Gold |

Note: For additional materials and finishes, see introduction page 43.

| Part Number |
|---|
| DAM53512-1405 |

Reader's Resource
For contact cavity arrangements, see page 223.
For P.C. hole patterns, see page 231.
For panel cutouts, see page 221.

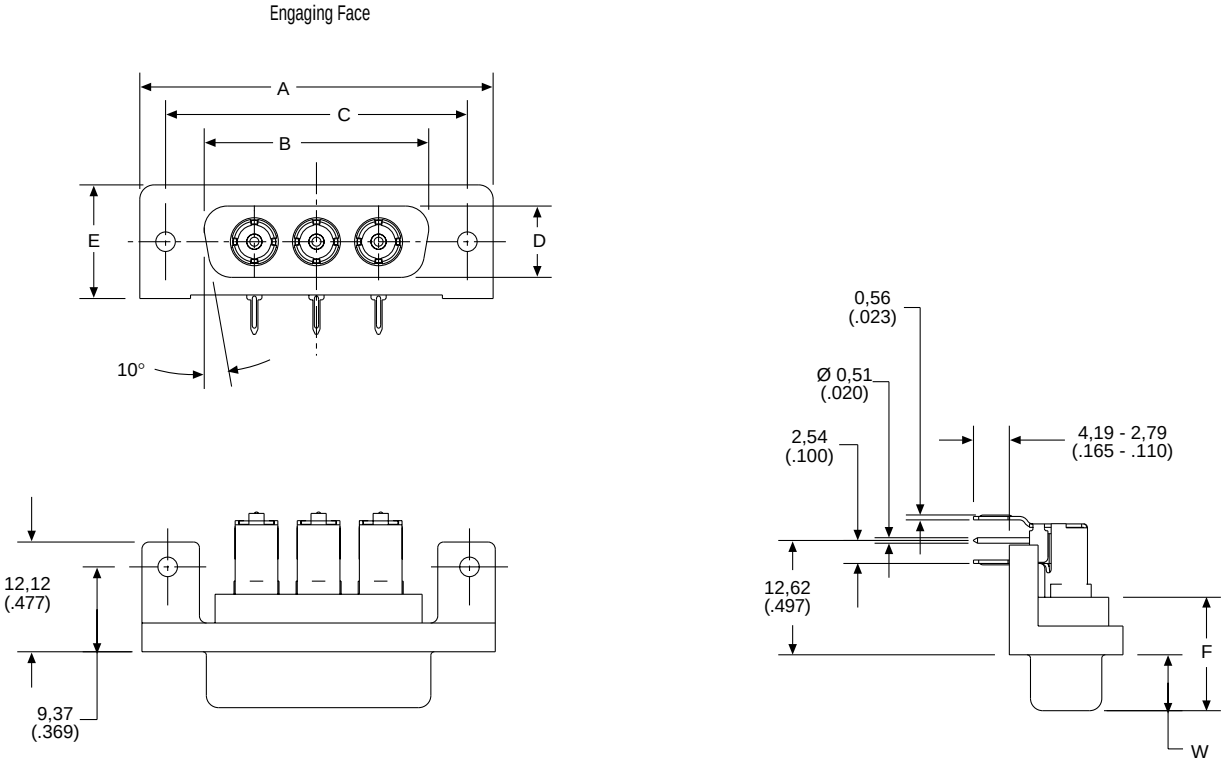


Note: Connector supplied with boardlocks.

### Dimensions

| Shell Size | A ±0,38 (.015) | B ±0,13 (.005) | C ±0,13 (.005) | D ±0,13 (.005) | E ±0,38 (.015) | F ±0,25 (.010) | W ±0,25 (.010) |
|---|---|---|---|---|---|---|---|
| DA | 39,14 (1.541) | 24,66 (.971) | 33,32 (1.312) | 7,90 (.311) | 12,55 (.494) | 10,90 (.429) | 6,17 (.243) |

## Coaxial 90° — European Footprint 10,2♦ or 9,4 mm♦♦ (Sizes DE-DC)

Plug

Reader's Resource

For contact cavity arrangements, see page 222.
For P.C. hole patterns, see page 234-235.
For panel cutouts, see page 221.
For alternate bracket configuration (when connectors are supplied without boardlocks), see page 226.
For alternate 50 Ohm coaxial configuration, see page 225.

75 Ohm Part Numbers* with Metal Bracket and Rivnut #4-40 UNC

| Shell Size | Layout | Part Number Without Screw Locks Without Boardlocks | Part Number Without Screw Locks With Boardlocks | Part Number With Screw Locks Without Boardlocks | Part Number With Screw Locks With Boardlocks |
|---|---|---|---|---|---|
| DE | 5W1 | DEMP5C1PVK87 | DEMC5C1PVK87 | DEMD5C1PVK87 | DEMG5C1PVK87 |
| DA | 7W2 | DAMP7C2PVK87 | DAMC7C2PVK87 | DAMD7C2PVK87 | DAMG7C2PVK87 |
| DA | 11W1 | DAMP11C1PVK87 | DAMC11C1PVK87 | DAMD11C1PVK87 | DAMG11C1PVK87 |
| DA | 3W3 | DAMP3C3PVK87 | DAMC3C3PVK87 | DAMD3C3PVK87 | DAMG3C3PVK87 |
| DA | 3WK3♣ | DAMP3CK3PVK87TM | DAMC3CK3PVK87TM | DAMD3CK3PVK87TM | DAMG3CK3PVK87TM |
| DB | 5W5 | DBMP5C5PVK87 | DBMC5C5PVK87 | DBMD5C5PVK87 | DBMG5C5PVK87 |
| DB | 9W4 | DBMP9C4PVK87 | DBMC9C4PVK87 | DBMD9C4PVK87 | DBMG9C4PVK87 |
| DB | 13W3 | DBMP13C3PVK87 | DBMC13C3PVK87 | DBMD13C3PVK87 | DBMG13C3PVK87 |
| DB | 17W2 | DBMP17C2PVK87 | DBMC17C2PVK87 | DBMD17C2PVK87 | DBMG17C2PVK87 |
| DB | 21W1 | DBMP21C1PVK87 | DBMC21C1PVK87 | DBMD21C1PVK87 | DBMG21C1PVK87 |
| DC | 8W8 | DCMP8C8PVK87 | DCMC8C8PVK87 | DCMD8C8PVK87 | DCMG8C8PVK87 |
| DC | 13W6 | DCMP13C6PVK87 | DCMC13C6PVK87 | DCMD13C6PVK87 | DCMG13C6PVK87 |
| DC | 17W5 | DCMP17C5PVK87 | DCMC17C5PVK87 | DCMD17C5PVK87 | DCMG17C5PVK87 |
| DC | 21WA4 | DCMP21CA4PVK87 | DCMC21CA4PVK87 | DCMD21CA4PVK87 | DCMG21CA4PVK87 |
| DC | 25W3 | DCMP25C3PVK87 | DCMC25C3PVK87 | DCMD25C3PVK87 | DCMG25C3PVK87 |
| DC | 27W2 | DCMP27C2PVK87 | DCMC27C2PVK87 | DCMD27C2PVK87 | DCMG27C2PVK87 |

For M3 threads replace MP with MS, MC with ML, MD with MO, MG with MJ.
Notes: * For 50 Ohm Coaxial substitute X for C. Example: DEMP5X1PVK87
For tin plated PC tails add A226 (signal contacts only). Example: DEMP5C1PVK87A226
For performance class 2 substitute K127 for K87. Example: DEMP5C1PVK127
For DD shell sizes (Standard footprint) see page 46.
♣ Keyed.

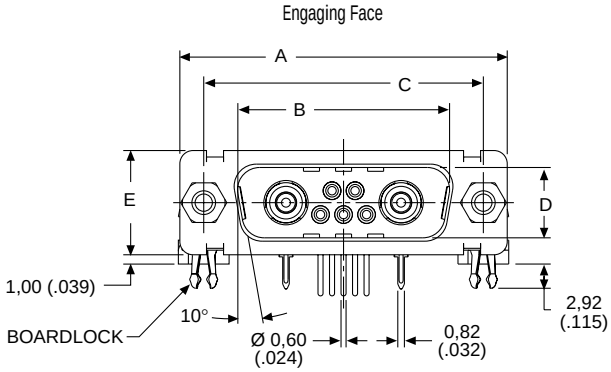


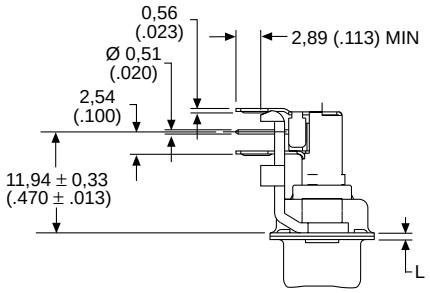


Screw lock, boardlock, and signal contacts removed for clarity

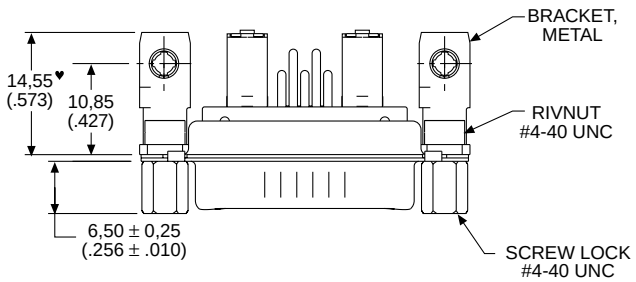


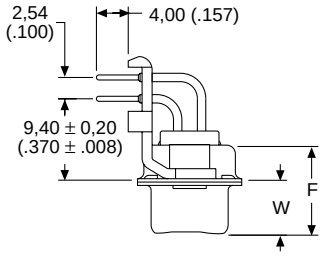


Screw lock, boardlock, and coaxial contact removed for clarity

Note: ♥ Dimension varies with alternate bracket configuration, see Reader's Resource page 226.

### Dimensions

| Shell Size | A ±0,38 (.015) | B ±0,13 (.005) | C ±0,13 (.005) | D ±0,13 (.005) | E ±0,38 (.015) | F ±0,25 (.010) | W ±0,368 (.0145) | W ±0,41 (.016) | L ±0,25 (.010) |
|---|---|---|---|---|---|---|---|---|---|
| DE | 30,81 (1.213) | 16,92 (.666) | 24,99 (.984) | 8,36 (.329) | 12,55 (.494) | 10,72 (.422) | 6,693 (.2635) | — | 0,76 (.030) |
| DA | 39,14 (1.541) | 25,25 (.994) | 33,32 (1.312) | 8,36 (.329) | 12,55 (.494) | 10,72 (.422) | 6,693 (.2635) | — | 0,76 (.030) |
| DB | 53,04 (2.088) | 38,96 (1.534) | 47,04 (1.852) | 8,36 (.329) | 12,55 (.494) | 10,82 (.426) | — | 6,84 (.269) | 0,99 (.039) |
| DC | 69,32 (2.729) | 55,42 (2.182) | 63,50 (2.500) | 8,36 (.329) | 12,55 (.494) | 10,82 (.426) | — | 6,84 (.269) | 0,99 (.039) |

♦ Connector footprint measured from the front shell.
♦♦ Connector footprint measured from the rear shell.



Dimensions are shown in mm (inch)
Dimensions subject to change

## Coaxial 90° — European Footprint 10,2♦ or 9,4 mm♦♦ (Sizes DE-DC)

Receptacle

Reader's Resource

For contact cavity arrangements, see page 223.
For P.C. hole patterns, see pages 236-237.
For panel cutouts, see page 221.
For alternate bracket configuration (when connectors are supplied without boardlocks), see page 226.
For alternate 50 Ohm coaxial configuration, see page 225.

75 Ohm Part Numbers* with Metal Bracket and Rivnut #4-40 UNC

| Shell Size | Layout | Part Number Without Screw Locks Without Boardlocks | Part Number Without Screw Locks With Boardlocks | Part Number With Screw Locks Without Boardlocks | Part Number With Screw Locks With Boardlocks |
|---|---|---|---|---|---|
| DE | 5W1 | DEMP5C1SVA197 | DEMC5C1SVA197 | DEMD5C1SVA197 | DEMG5C1SVA197 |
| DA | 7W2 | DAMP7C2SVA197 | DAMC7C2SVA197 | DAMD7C2SVA197 | DAMG7C2SVA197 |
| DA | 11W1 | DAMP11C1SVA197 | DAMC11C1SVA197 | DAMD11C1SVA197 | DAMG11C1SVA197 |
| DA | 3W3 | DAMP3C3SVA197 | DAMC3C3SVA197 | DAMD3C3SVA197 | DAMG3C3SVA197 |
| DA | 3WK3♣ | DAMP3CK3SVA197TM | DAMC3CK3SVA197TM | DAMD3CK3SVA197TM | DAMG3CK3SVA197TM |
| DB | 5W5 | DBMP5C5SVA197 | DBMC5C5SVA197 | DBMD5C5SVA197 | DBMG5C5SVA197 |
| DB | 9W4 | DBMP9C4SVA197 | DBMC9C4SVA197 | DBMD9C4SVA197 | DBMG9C4SVA197 |
| DB | 13W3 | DBMP13C3SVA197 | DBMC13C3SVA197 | DBMD13C3SVA197 | DBMG13C3SVA197 |
| DB | 17W2 | DBMP17C2SVA197 | DBMC17C2SVA197 | DBMD17C2SVA197 | DBMG17C2SVA197 |
| DB | 21W1 | DBMP21C1SVA197 | DBMC21C1SVA197 | DBMD21C1SVA197 | DBMG21C1SVA197 |
| DC | 8W8 | DCMP8C8SVA197 | DCMC8C8SVA197 | DCMD8C8SVA197 | DCMG8C8SVA197 |
| DC | 13W6 | DCMP13C6SVA197 | DCMC13C6SVA197 | DCMD13C6SVA197 | DCMG13C6SVA197 |
| DC | 17W5 | DCMP17C5SVA197 | DCMC17C5SVA197 | DCMD17C5SVA197 | DCMG17C5SVA197 |
| DC | 21WA4 | DCMP21CA4SVA197 | DCMC21CA4SVA197 | DCMD21CA4SVA197 | DCMG21CA4SVA197 |
| DC | 25W3 | DCMP25C3SVA197 | DCMC25C3SVA197 | DCMD25C3SVA197 | DCMG25C3SVA197 |
| DC | 27W2 | DCMP27C2SVA197 | DCMC27C2SVA197 | DCMD27C2SVA197 | DCMG27C2SVA197 |

For M3 threads replace MP with MS, MC with ML, MD with MO, MG with MJ.
Notes: * For 50 Ohm Coaxial substitute X for C. Example: DEMP5X1SVA197
For performance class 2 substitute K126 for A197. Example: DEMP5C1SVK126
For DD shell sizes (standard footprint) see page 47.
♣ Keyed.

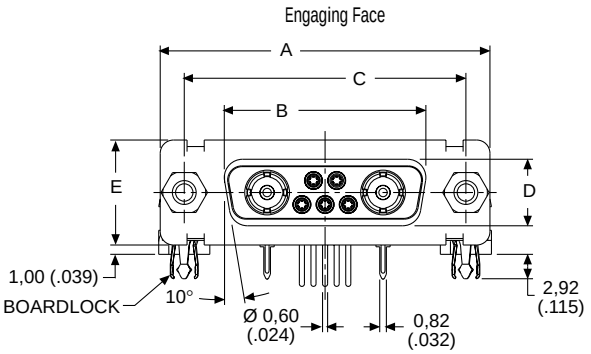


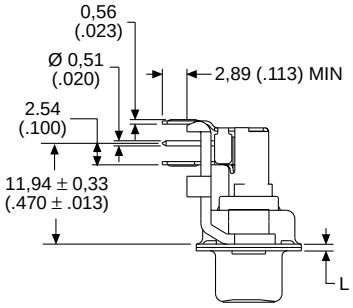


Screw lock, boardlock, and signal contacts removed for clarity

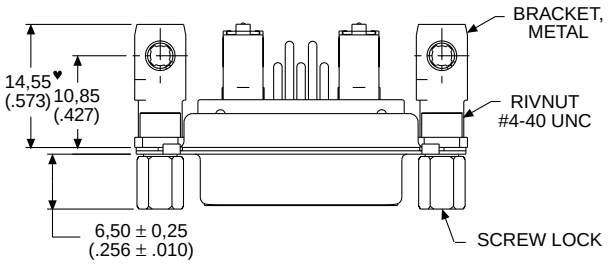


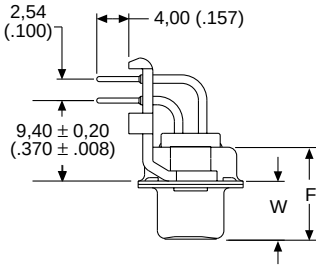


Screw lock, boardlock, and coaxial contact removed for clarity

Note: ♥ Dimension varies with alternate bracket configuration, see Reader's Resource page 226.

### Dimensions

| Shell Size | A ±0,38 (.015) | B ±0,13 (.005) | C ±0,13 (.005) | D ±0,13 (.005) | E ±0,38 (.015) | F ±0,25 (.010) | W ±0,38 (.015) | L ±0,25 (.010) |
|---|---|---|---|---|---|---|---|---|
| DE | 30,81 (1.213) | 16,33 (.643) | 24,99 (.984) | 7,90 (.311) | 12,55 (.494) | 10,90 (.429) | 6,94 (.273) | 0,76 (.030) |
| DA | 39,14 (1.541) | 24,66 (.971) | 33,32 (1.312) | 7,90 (.311) | 12,55 (.494) | 10,90 (.429) | 6,94 (.273) | 0,76 (.030) |
| DB | 53,04 (2.088) | 38,38 (1.511) | 47,04 (1.852) | 7,90 (.311) | 12,55 (.494) | 10,90 (.429) | 6,94 (.273) | 0,76 (.030) |
| DC | 69,32 (2.729) | 54,84 (2.159) | 63,50 (2.500) | 7,90 (.311) | 12,55 (.494) | 10,90 (.429) | 6,94 (.273) | 0,76 (.030) |

♦ Connector footprint measured from the front shell.
♦♦ Connector footprint measured from the rear shell.

## Coaxial Straight — Standard PC Tails (Sizes DE-DC)

Plug

Reader's Resource

For contact cavity arrangements, see page 222.
For P.C. hole patterns, see pages 238-239.
For panel cutouts, see page 221.
For alternate 50 Ohm coaxial configuration, see page 225.

75 Ohm Part Numbers* with Standoff #4-40 UNC

| Shell Size | Layout | Part Number Without Screw Locks Without Boardlocks | Part Number Without Screw Locks With Boardlocks | Part Number With Screw Locks With Boardlocks |
|---|---|---|---|---|
| DE | 5W1 | DEMV5C1PNK87 | DEMZ5C1PNK87 | DEMN5C1PNK87 |
| DA | 7W2 | DAMV7C2PNK87 | DAMZ7C2PNK87 | DAMN7C2PNK87 |
| DA | 11W1 | DAMV11C1PNK87 | DAMZ11C1PNK87 | DAMN11C1PNK87 |
| DA | 3W3 | DAMV3C3PNK87 | DAMZ3C3PNK87 | DAMN3C3PNK87 |
| DA | 3WK3♣ | DAMV3CK3PNK87TM | DAMZ3CK3PNK87TM | DAMN3CK3PNK87TM |
| DB | 5W5 | DBMV5C5PNK87 | DBMZ5C5PNK87 | DBMN5C5PNK87 |
| DB | 9W4 | DBMV9C4PNK87 | DBMZ9C4PNK87 | DBMN9C4PNK87 |
| DB | 13W3 | DBMV13C3PNK87 | DBMZ13C3PNK87 | DBMN13C3PNK87 |
| DB | 17W2 | DBMV17C2PNK87 | DBMZ17C2PNK87 | DBMN17C2PNK87 |
| DB | 21W1 | DBMV21C1PNK87 | DBMZ21C1PNK87 | DBMN21C1PNK87 |
| DC | 8W8 | DCMV8C8PNK87 | DCMZ8C8PNK87 | DCMN8C8PNK87 |
| DC | 13W6 | DCMV13C6PNK87 | DCMZ13C6PNK87 | DCMN13C6PNK87 |
| DC | 17W5 | DCMV17C5PNK87 | DCMZ17C5PNK87 | DCMN17C5PNK87 |
| DC | 21WA4 | DCMV21CA4PNK87 | DCMZ21CA4PNK87 | DCMN21CA4PNK87 |
| DC | 25W3 | DCMV25C3PNK87 | DCMZ25C3PNK87 | DCMN25C3PNK87 |
| DC | 27W2 | DCMV27C2PNK87 | DCMZ27C2PNK87 | DCMN27C2PNK87 |

Notes: * For 50 Ohm Coaxial substitute X for C. Example: DEMV5X1PNK87
For contacts with 30 microinches gold substitute K127 for K87. Example: DEMN5C1PNK127
For DD shell sizes, see page 54.
♣ Keyed.

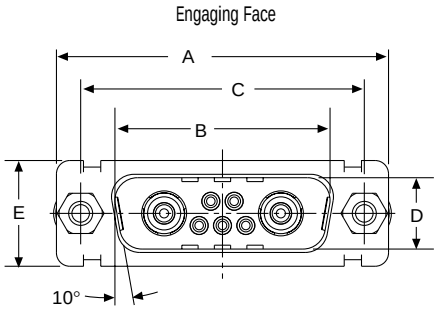


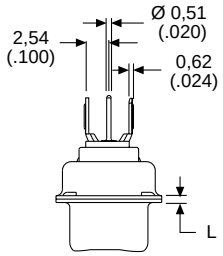


Screw lock, boardlock, and signal contacts removed for clarity

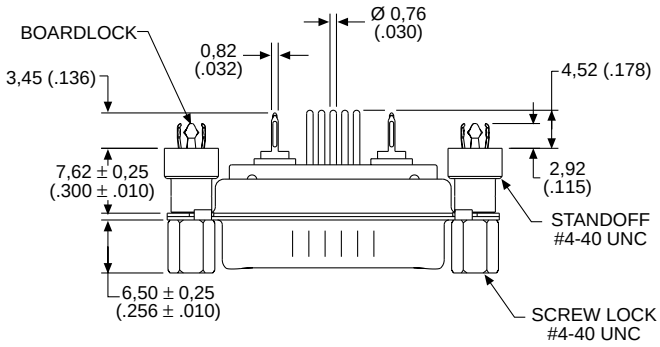


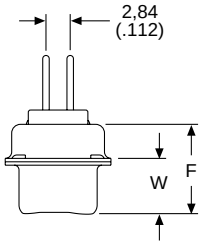


Screw lock, boardlock, and coaxial contact removed for clarity

Dimensions

| Shell Size | A ±0,38 (.015) | B ±0,13 (.005) | C ±0,13 (.005) | D ±0,13 (.005) | E ±0,38 (.015) | F ±0,25 (.010) | W ±0,368 (.0145) | W ±0,41 (.016) | L ±0,25 (.010) |
|---|---|---|---|---|---|---|---|---|---|
| DE | 30,81 (1.213) | 16,92 (.666) | 24,99 (.984) | 8,36 (.329) | 12,55 (.494) | 10,72 (.422) | 6,693 (.2635) | — | 0,76 (.030) |
| DA | 39,14 (1.541) | 25,25 (.994) | 33,32 (1.312) | 8,36 (.329) | 12,55 (.494) | 10,72 (.422) | 6,693 (.2635) | — | 0,76 (.030) |
| DB | 53,04 (2.088) | 38,96 (1.534) | 47,04 (1.852) | 8,36 (.329) | 12,55 (.494) | 10,82 (.426) | — | 6,84 (.269) | 0,99 (.039) |
| DC | 69,32 (2.729) | 55,42 (2.182) | 63,50 (2.500) | 8,36 (.329) | 12,55 (.494) | 10,82 (.426) | — | 6,84 (.269) | 0,99 (.039) |



Dimensions are shown in mm (inch)
Dimensions subject to change

## Coaxial Straight — Standard PC Tails (Sizes DE-DC)

Receptacle

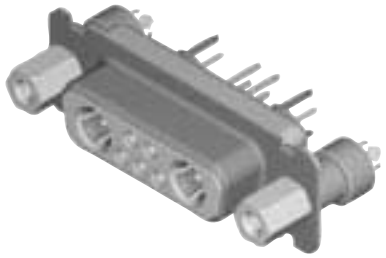

Reader's Resource

For contact cavity arrangements, see page 223.
For P.C. hole patterns, see pages 241-242.
For panel cutouts, see page 221.
For alternate 50 Ohm coaxial configuration, see page 225.

75 Ohm Part Numbers* with Standoff #4-40 UNC

| Shell Size | Layout | Part Number Without Screw Locks Without Boardlocks | Part Number Without Screw Locks With Boardlocks | Part Number With Screw Locks With Boardlocks |
|---|---|---|---|---|
| DE | 5W1 | DEMV5C1SNA197 | DEMZ5C1SNA197 | DEMN5C1SNA197 |
| DA | 7W2 | DAMV7C2SNA197 | DAMZ7C2SNA197 | DAMN7C2SNA197 |
| DA | 11W1 | DAMV11C1SNA197 | DAMZ11C1SNA197 | DAMN11C1SNA197 |
| DA | 3W3 | DAMV3C3SNA197 | DAMZ3C3SNA197 | DAMN3C3SNA197 |
| DA | 3WK3♣ | DAMV3CK3SNA197TM | DAMZ3CK3SNA197TM | DAMN3CK3SNA197TM |
| DB | 5W5 | DBMV5C5SNA197 | DBMZ5C5SNA197 | DBMN5C5SNA197 |
| DB | 9W4 | DBMV9C4SNA197 | DBMZ9C4SNA197 | DBMN9C4SNA197 |
| DB | 13W3 | DBMV13C3SNA197 | DBMZ13C3SNA197 | DBMN13C3SNA197 |
| DB | 17W2 | DBMV17C2SNA197 | DBMZ17C2SNA197 | DBMN17C2SNA197 |
| DB | 21W1 | DBMV21C1SNA197 | DBMZ21C1SNA197 | DBMN21C1SNA197 |
| DC | 8W8 | DCMV8C8SNA197 | DCMZ8C8SNA197 | DCMN8C8SNA197 |
| DC | 13W6 | DCMV13C6SNA197 | DCMZ13C6SNA197 | DCMN13C6SNA197 |
| DC | 17W5 | DCMV17C5SNA197 | DCMZ17C5SNA197 | DCMN17C5SNA197 |
| DC | 21WA4 | DCMV21CA4SNA197 | DCMZ21CA4SNA197 | DCMN21CA4SNA197 |
| DC | 25W3 | DCMV25C3SNA197 | DCMZ25C3SNA197 | DCMN25C3SNA197 |
| DC | 27W2 | DCMV27C2SNA197 | DCMZ27C2SNA197 | DCMN27C2SNA197 |

Notes: * For 50 Ohm Coaxial substitute X for C. Example: DEMV5X1SNA197
For contacts with 30 microinches gold substitute K126 for A197. Example: DEMN5C1SNK126
For DD shell sizes, see page 55.
♣ Keyed.

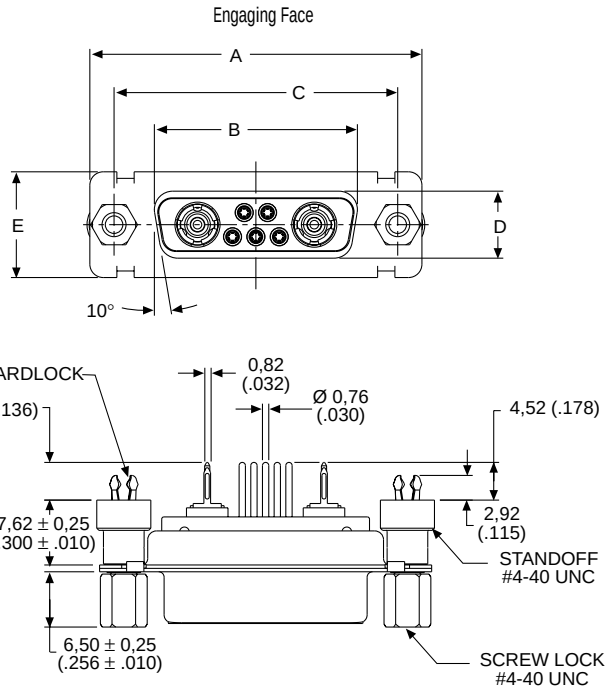


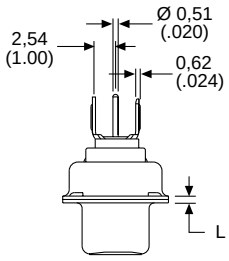


Hardware and signal contacts removed for clarity

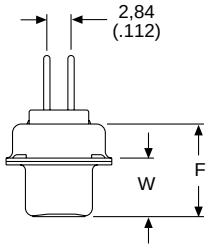


Hardware and coaxial contact removed for clarity

Dimensions

| Shell Size | A ±0,38 (.015) | B ±0,13 (.005) | C ±0,13 (.005) | D ±0,13 (.005) | E ±0,38 (.015) | F 0,25 (.010) | W ±0,38 (.015) | L ±0,25 (.010) |
|---|---|---|---|---|---|---|---|---|
| DE | 30,81 (1.213) | 16,33 (.643) | 24,99 (.984) | 7,90 (.311) | 12,55 (.494) | 10,90 (.429) | 6,94 (.273) | 0,76 (.030) |
| DA | 39,14 (1.541) | 24,66 (.971) | 33,32 (1.312) | 7,90 (.311) | 12,55 (.494) | 10,90 (.429) | 6,94 (.273) | 0,76 (.030) |
| DB | 53,04 (2.088) | 38,38 (1.511) | 47,04 (1.852) | 7,90 (.311) | 12,55 (.494) | 10,90 (.429) | 6,94 (.273) | 0,76 (.030) |
| DC | 69,32 (2.729) | 54,84 (2.159) | 63,50 (2.500) | 7,90 (.311) | 12,55 (.494) | 10,90 (.429) | 6,94 (.273) | 0,76 (.030) |

## Coaxial Straight — Standard PC Tails (Size DD)

Plug

75 Ohm Part Numbers* with Standoff #4-40 UNC

| Shell Size | Layout | Part Number Without Screw Locks Without Boardlocks | Part Number Without Screw Locks With Boardlocks | Part Number With Screw Locks With Boardlocks |
|---|---|---|---|---|
| DD | 24W7 | DDMV24C7PNK87 | DDMZ24C7PNK87 | DDMN24C7PNK87 |
| DD | 36W4 | DDMV36C4PNK87 | DDMZ36C4PNK87 | DDMN36C4PNK87 |
| DD | 43W2 | DDMV43C2PNK87 | DDMZ43C2PNK87 | DDMN43C2PNK87 |
| DD | 47W1 | DDMV47C1PNK87 | DDMZ47C1PNK87 | DDMN47C1PNK87 |

Notes: * For 50 Ohm Coaxial substitute X for C. Example: DDMV24X7PNK87
For contacts with 30 microinches gold substitute K127 for K87. Example: DDMN24C7PNK127

Reader's Resource
For contact cavity arrangements, see page 222.
For P.C. hole patterns, see page 240.
For panel cutouts, see page 221.
For alternate 50 Ohm coaxial configuration, see page 225.

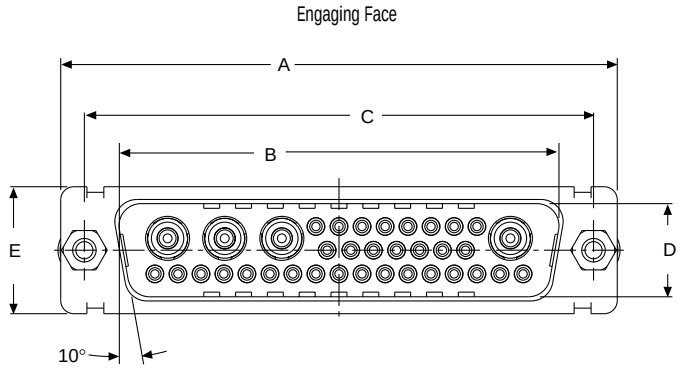


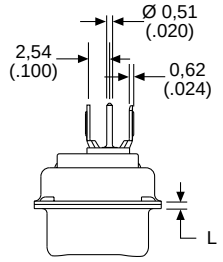


Hardware and signal contacts removed for clarity

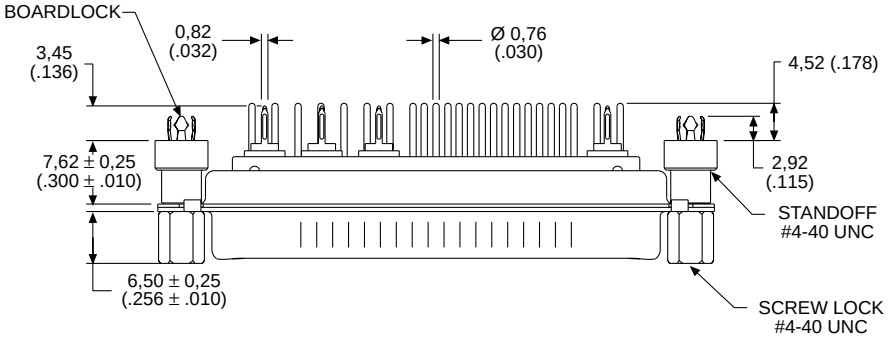


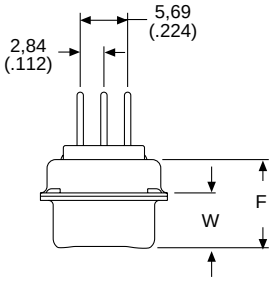


Hardware and coaxial contact removed for clarity

Dimensions

| Shell Size | A ±0,38 (.015) | B ±0,13 (.005) | C ±0,13 (.005) | D ±0,13 (.005) | E ±0,38 (.015) | F ±0,25 (.010) | W ±0,41 (.016) | L ±0,25 (.010) |
|---|---|---|---|---|---|---|---|---|
| DD | 66,93 (2.635) | 52,81 (2.079) | 61,11 (2.406) | 11,07 (.436) | 15,37 (.605) | 10,82 (.426) | 6,84 (.269) | 0,99 (.039) |



Dimensions are shown in mm (inch)
Dimensions subject to change

## Coaxial Straight — Standard PC Tails (Size DD)

Receptacle

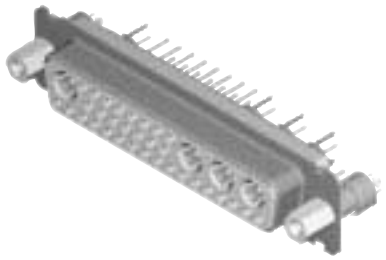

75 Ohm Part Numbers* with Standoff #4-40 UNC

| Shell Size | Layout | Part Number Without Screw Locks Without Boardlocks | Part Number Without Screw Locks With Boardlocks | Part Number With Screw Locks With Boardlocks |
|---|---|---|---|---|
| DD | 24W7 | DDMV24C7SNA197 | DDMZ24C7SNA197 | DDMN24C7SNA197 |
| DD | 36W4 | DDMV36C4SNA197 | DDMZ36C4SNA197 | DDMN36C4SNA197 |
| DD | 43W2 | DDMV43C2SNA197 | DDMZ43C2SNA197 | DDMN43C2SNA197 |
| DD | 47W1 | DDMV47C1SNA197 | DDMZ47C1SNA197 | DDMN47C1SNA197 |

Notes: * For 50 Ohm Coaxial substitute X for C. Example: DDMV24X7SNA197
For contacts with 30 microinches gold substitute K126 for A197. Example: DDMN24C7SNK126

Reader's Resource
For contact cavity arrangements, see page 223.
For P.C. hole patterns, see page 243.
For panel cutouts, see page 221.
For alternate 50 Ohm coaxial configuration, see page 225.

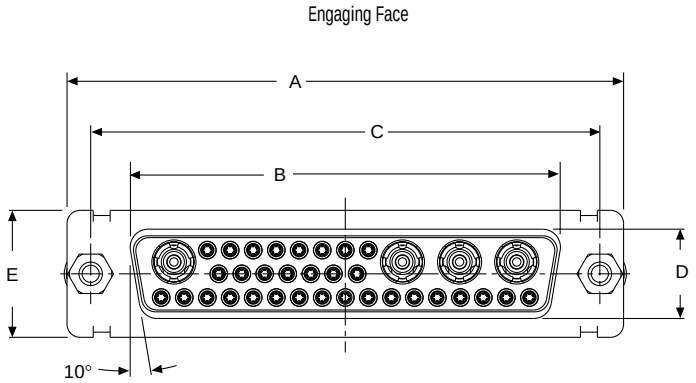


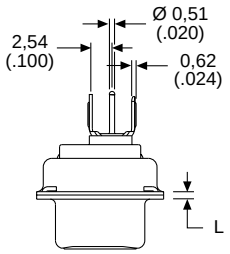


Hardware and signal contacts removed for clarity

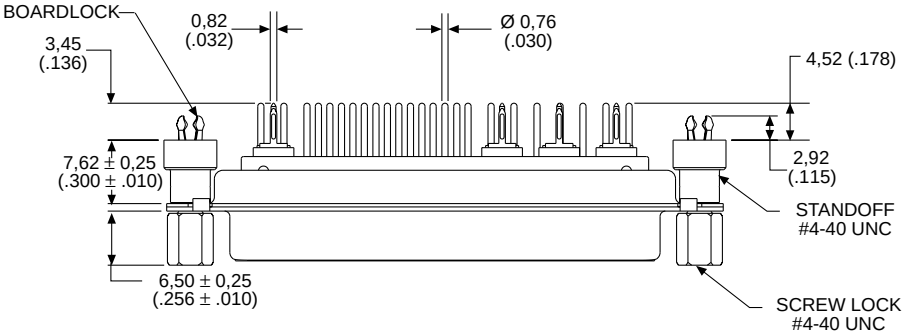


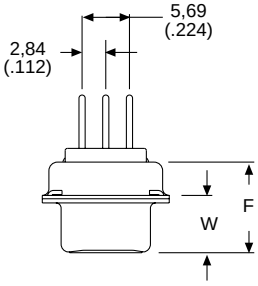


Hardware and coaxial contact removed for clarity

Dimensions

| Shell Size | A ±0,38 (.015) | B ±0,13 (.005) | C ±0,13 (.005) | D ±0,13 (.005) | E ±0,38 (.015) | F ±0,25 (.010) | W ±0,38 (.015) | L ±0,25 (.010) |
|---|---|---|---|---|---|---|---|---|
| DD | 66,93 (2.635) | 52,42 (2.064) | 61,11 (2.406) | 10,74 (.423) | 15,37 (.605) | 10,90 (.429) | 6,94 (.273) | 0,76 (.030) |

## Coaxial Straight — European PC Tails (Sizes DE-DC)

Plug

Reader's Resource

For contact cavity arrangements, see page 222.
For P.C. hole patterns, see pages 238-239.
For panel cutouts, see page 221.
For alternate 50 Ohm coaxial configuration, see page 225.

75 Ohm Part Numbers* with Standoff #4-40 UNC

| Shell Size | Layout | Part Number Without Screw Locks Without Boardlocks | Part Number Without Screw Locks With Boardlocks | Part Number With Screw Locks With Boardlocks |
|---|---|---|---|---|
| DE | 5W1 | DEMV5C1PYK87 | DEMZ5C1PYK87 | DEMN5C1PYK87 |
| DA | 7W2 | DAMV7C2PYK87 | DAMZ7C2PYK87 | DAMN7C2PYK87 |
| DA | 11W1 | DAMV11C1PYK87 | DAMZ11C1PYK87 | DAMN11C1PYK87 |
| DA | 3W3 | DAMV3C3PYK87 | DAMZ3C3PYK87 | DAMN3C3PYK87 |
| DA | 3WK3♣ | DAMV3CK3PYK87TM | DAMZ3CK3PYK87TM | DAMN3CK3PYK87TM |
| DB | 5W5 | DBMV5C5PYK87 | DBMZ5C5PYK87 | DBMN5C5PYK87 |
| DB | 9W4 | DBMV9C4PYK87 | DBMZ9C4PYK87 | DBMN9C4PYK87 |
| DB | 13W3 | DBMV13C3PYK87 | DBMZ13C3PYK87 | DBMN13C3PYK87 |
| DB | 17W2 | DBMV17C2PYK87 | DBMZ17C2PYK87 | DBMN17C2PYK87 |
| DB | 21W1 | DBMV21C1PYK87 | DBMZ21C1PYK87 | DBMN21C1PYK87 |
| DC | 8W8 | DCMV8C8PYK87 | DCMZ8C8PYK87 | DCMN8C8PYK87 |
| DC | 13W6 | DCMV13C6PYK87 | DCMZ13C6PYK87 | DCMN13C6PYK87 |
| DC | 17W5 | DCMV17C5PYK87 | DCMZ17C5PYK87 | DCMN17C5PYK87 |
| DC | 21WA4 | DCMV21CA4PYK87 | DCMZ21CA4PYK87 | DCMN21CA4PYK87 |
| DC | 25W3 | DCMV25C3PYK87 | DCMZ25C3PYK87 | DCMN25C3PYK87 |
| DC | 27W2 | DCMV27C2PYK87 | DCMZ27C2PYK87 | DCMN27C2PYK87 |

For M3 threads replace MV with MT, MZ with MQ, MN with MU.
Notes: * For 50 Ohm Coaxial substitute X for C. Example: DEMV5X1PYK87
For tin plated PC tails add A226 (signal contacts only). Example: DEMV5C1PYK87A226
For performance class 2 substitute K127 for K87. Example: DEMV5C1PYK127
For DD shell sizes, see page 58.
♣ Keyed.

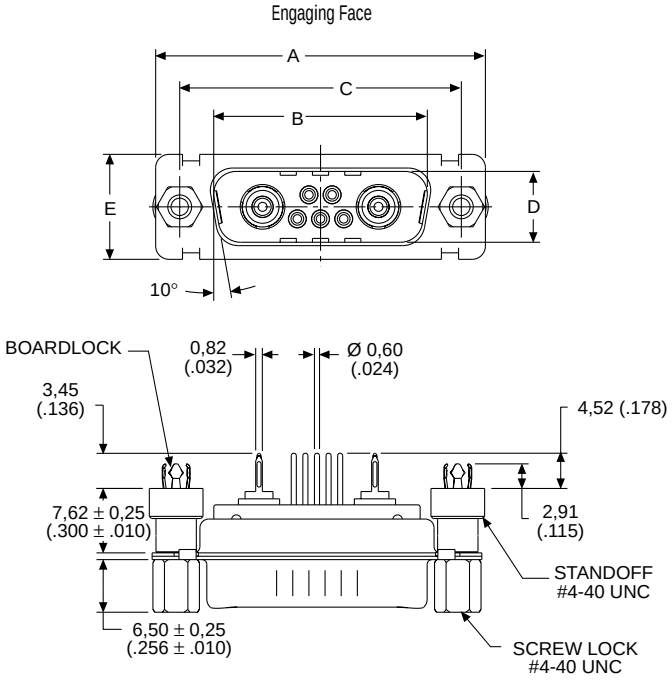


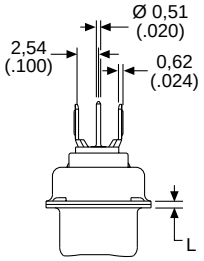


Hardware and signal contacts removed for clarity

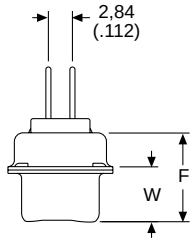


Hardware and coaxial contact removed for clarity

Dimensions

| Shell Size | A ±0,38 (.015) | B ±0,13 (.005) | C ±0,13 (.005) | D ±0,13 (.005) | E ±0,38 (.015) | F ±0,25 (.010) | W ±0,368 (.0145) | W ±0,41 (.016) | L ±0,25 (.010) |
|---|---|---|---|---|---|---|---|---|---|
| DE | 30,81 (1.213) | 16,92 (.666) | 24,99 (.984) | 8,36 (.329) | 12,55 (.494) | 10,72 (.422) | 6,693 (.2635) | — | 0,76 (.030) |
| DA | 39,14 (1.541) | 25,25 (.994) | 33,32 (1.312) | 8,36 (.329) | 12,55 (.494) | 10,72 (.422) | 6,693 (.2635) | — | 0,76 (.030) |
| DB | 53,04 (2.088) | 38,96 (1.534) | 47,04 (1.852) | 8,36 (.329) | 12,55 (.494) | 10,82 (.426) | — | 6,84 (.269) | 0,99 (.039) |
| DC | 69,32 (2.729) | 55,42 (2.182) | 63,50 (2.500) | 8,36 (.329) | 12,55 (.494) | 10,82 (.426) | — | 6,84 (.269) | 0,99 (.039) |



Dimensions are shown in mm (inch)
Dimensions subject to change

## Coaxial Straight — European PC Tails (Sizes DE-DC)

Receptacle

Reader's Resource

For contact cavity arrangements, see page 223.
For P.C. hole patterns, see pages 241-242.
For panel cutouts, see page 221.
For alternate 50 Ohm coaxial configuration, see page 225.

75 Ohm Part Numbers* with Standoff #4-40 UNC

| Shell Size | Layout | Part Number Without Screw Locks Without Boardlocks | Part Number Without Screw Locks With Boardlocks | Part Number With Screw Locks With Boardlocks |
|---|---|---|---|---|
| DE | 5W1 | DEMV5C1SYA197 | DEMZ5C1SYA197 | DEMN5C1SYA197 |
| DA | 7W2 | DAMV7C2SYA197 | DAMZ7C2SYA197 | DAMN7C2SYA197 |
| DA | 11W1 | DAMV11C1SYA197 | DAMZ11C1SYA197 | DAMN11C1SYA197 |
| DA | 3W3 | DAMV3C3SYA197 | DAMZ3C3SYA197 | DAMN3C3SYA197 |
| DA | 3WK3♣ | DAMV3CK3SYA197TM | DAMZ3CK3SYA197TM | DAMN3CK3SYA197TM |
| DB | 5W5 | DBMV5C5SYA197 | DBMZ5C5SYA197 | DBMN5C5SYA197 |
| DB | 9W4 | DBMV9C4SYA197 | DBMZ9C4SYA197 | DBMN9C4SYA197 |
| DB | 13W3 | DBMV13C3SYA197 | DBMZ13C3SYA197 | DBMN13C3SYA197 |
| DB | 17W2 | DBMV17C2SYA197 | DBMZ17C2SYA197 | DBMN17C2SYA197 |
| DB | 21W1 | DBMV21C1SYA197 | DBMZ21C1SYA197 | DBMN21C1SYA197 |
| DC | 8W8 | DCMV8C8SYA197 | DCMZ8C8SYA197 | DCMN8C8SYA197 |
| DC | 13W6 | DCMV13C6SYA197 | DCMZ13C6SYA197 | DCMN13C6SYA197 |
| DC | 17W5 | DCMV17C5SYA197 | DCMZ17C5SYA197 | DCMN17C5SYA197 |
| DC | 21WA4 | DCMV21CA4SYA197 | DCMZ21CA4SYA197 | DCMN21CA4SYA197 |
| DC | 25W3 | DCMV25C3SYA197 | DCMZ25C3SYA197 | DCMN25C3SYA197 |
| DC | 27W2 | DCMV27C2SYA197 | DCMZ27C2SYA197 | DCMN27C2SYA197 |

For M3 threads replace MV with MT, MZ with MQ, MN with MU.
Notes: * For 50 Ohm Coaxial substitute X for C. Example: DEMV5X1SYA197
For performance class 2 substitute K126 for A197. Example: DEMV5C1SYK126
For DD shell sizes, see page 59.
♣ Keyed.

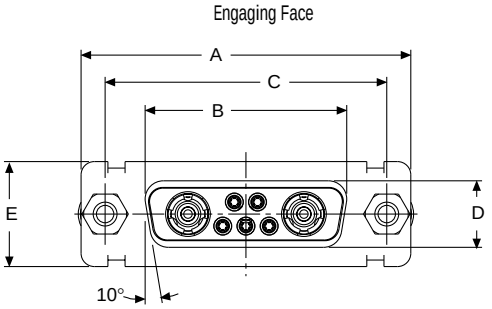


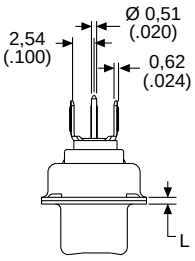


Hardware and signal contacts removed for clarity

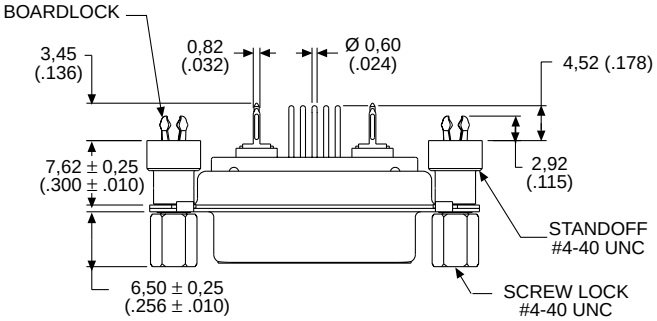


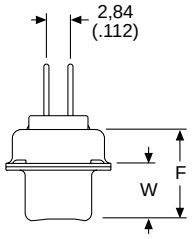


Hardware and coaxial contact removed for clarity

Dimensions

| Shell Size | A ±0.38 (.015) | B ±0,13 (.005) | C ±0,13 (.005) | D ±0,13 (.005) | E ±0,38 (.015) | F ±0,25 (.010) | W ±0,38 (.015) | L ±0,25 (.010) |
|---|---|---|---|---|---|---|---|---|
| DE | 30,81 (1.213) | 16,33 (.643) | 24,99 (.984) | 7,90 (.311) | 12,55 (.494) | 10,90 (.429) | 6,94 (.273) | 0,76 (.030) |
| DA | 39,14 (1.541) | 24,66 (.971) | 33,32 (1.312) | 7,90 (.311) | 12,55 (.494) | 10,90 (.429) | 6,94 (.273) | 0,76 (.030) |
| DB | 53,04 (2.088) | 38,38 (1.511) | 47,04 (1.852) | 7,90 (.311) | 12,55 (.494) | 10,90 (.429) | 6,94 (.273) | 0,76 (.030) |
| DC | 69,32 (2.729) | 54,84 (2.159) | 63,50 (2.500) | 7,90 (.311) | 12,55 (.494) | 10,90 (.429) | 6,94 (.273) | 0,76 (.030) |

## Coaxial Straight — European PC Tails (Size DD)

Plug

75 Ohm Part Numbers* with Standoff #4-40 UNC

| Shell Size | Layout | Part Number Without Screw Locks Without Boardlocks | Part Number Without Screw Locks With Boardlocks | Part Number With Screw Locks With Boardlocks |
|---|---|---|---|---|
| DD | 24W7 | DDMV24C7PYK87 | DDMZ24C7PYK87 | DDMN24C7PYK87 |
| DD | 36W4 | DDMV36C4PYK87 | DDMZ36C4PYK87 | DDMN36C4PYK87 |
| DD | 43W2 | DDMV43C2PYK87 | DDMZ43C2PYK87 | DDMN43C2PYK87 |
| DD | 47W1 | DDMV47C1PYK87 | DDMZ47C1PYK87 | DDMN47C1PYK87 |

For M3 threads replace MV with MT, MZ with MQ, MN with MU.
Notes: * For 50 Ohm Coaxial substitute X for C. Example: DDMV24X7PYK87
For tin plated PC tails add A226 (signal contacts only). Example: DDMV24C7PYK87A226
For performance class 2 substitute K127 for K87. Example: DDMV24C7PYK127

Reader's Resource
For contact cavity arrangements, see page 222.
For P.C. hole patterns, see page 240.
For panel cutouts, see page 221.
For alternate 50 Ohm coaxial configuration, see page 225.

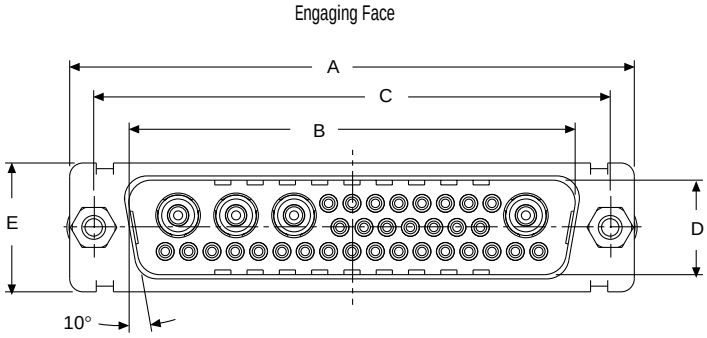


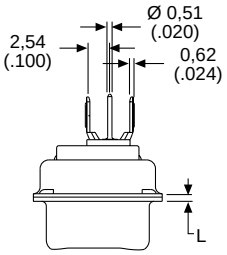


Hardware and signal contacts removed for clarity

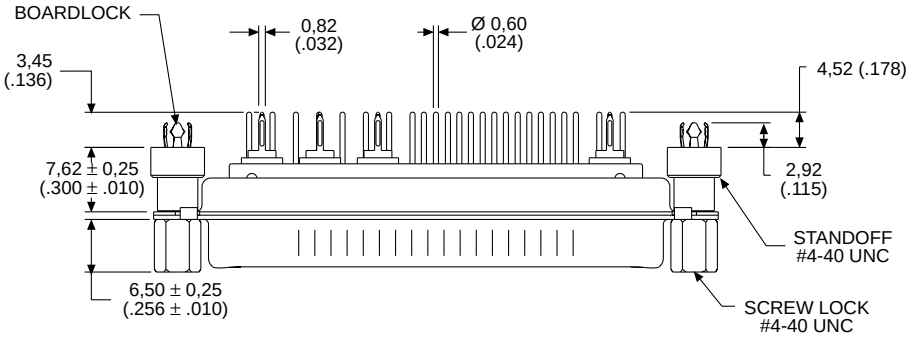


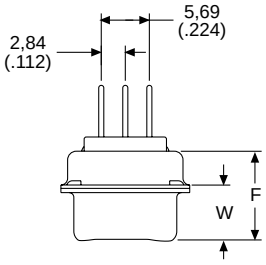


Hardware and coaxial contact removed for clarity

Dimensions

| Shell Size | A ±0,38 (.015) | B ±0,13 (.005) | C ±0,13 (.005) | D ±0,13 (.005) | E ±0,38 (.015) | F ±0,25 (.010) | W ±0,41 (.016) | L ±0,25 (.010) |
|---|---|---|---|---|---|---|---|---|
| DD | 66,93 (2.635) | 52,81 (2.079) | 61,11 (2.406) | 11,07 (.436) | 15,37 (.605) | 10,82 (.426) | 6,84 (.269) | 0,99 (.039) |



Dimensions are shown in mm (inch)
Dimensions subject to change

## Coaxial Straight — European PC Tails (Size DD)

Receptacle

75 Ohm Part Numbers* with Standoff #4-40 UNC

| Shell Size | Layout | Part Number Without Screw Locks Without Boardlocks | Part Number Without Screw Locks With Boardlocks | Part Number With Screw Locks With Boardlocks |
|---|---|---|---|---|
| DD | 24W7 | DDMV24C7SYA197 | DDMZ24C7SYA197 | DDMN24C7SYA197 |
| DD | 36W4 | DDMV36C4SYA197 | DDMZ36C4SYA197 | DDMN36C4SYA197 |
| DD | 43W2 | DDMV43C2SYA197 | DDMZ43C2SYA197 | DDMN43C2SYA197 |
| DD | 47W1 | DDMV47C1SYA197 | DDMZ47C1SYA197 | DDMN47C1SYA197 |

For M3 threads replace MV with MT, MZ with MQ, MN with MU.
Notes: * For 50 Ohm Coaxial substitute X for C. Example: DDMV24X7SYA197
For performance class 2 substitute K126 for A197. Example: DDMV24C7SYK126

Reader's Resource

For contact cavity arrangements, see page 223.
For P.C. hole patterns, see page 243.
For panel cutouts, see page 221.
For alternate 50 Ohm coaxial configuration, see page 225.

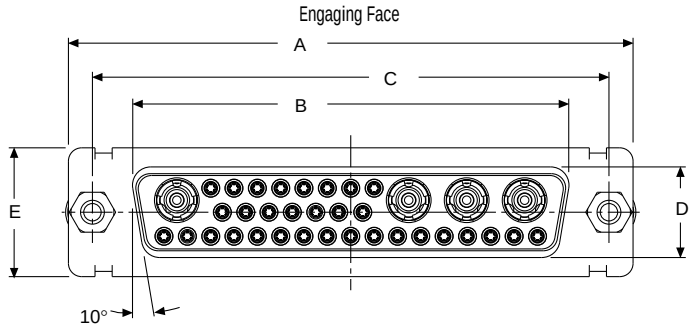


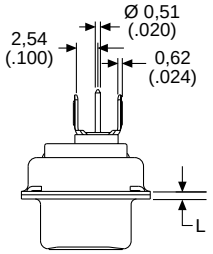


Hardware and signal contacts removed for clarity

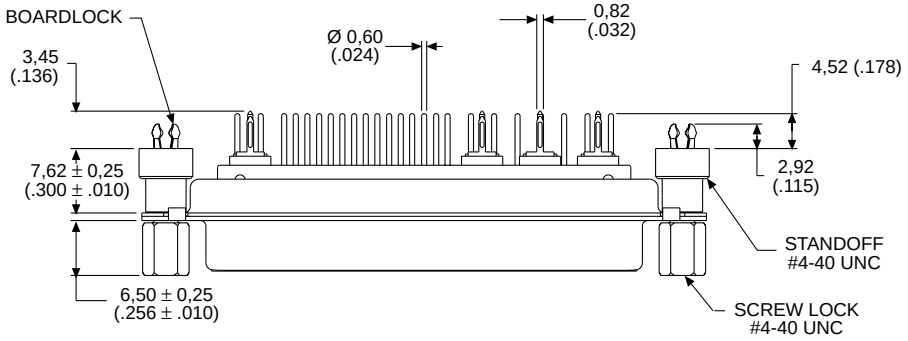


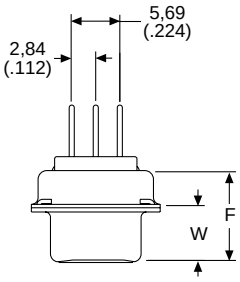


Hardware and coaxial contact removed for clarity

Dimensions

| Shell Size | A ±0,38 (.015) | B ±0,13 (.005) | C ±0,13 (.005) | D ±0,13 (.005) | E ±0,38 (.015) | F ±0,25 (.010) | W ±0,38 (.015) | L ±0,25 (.010) |
|---|---|---|---|---|---|---|---|---|
| DD | 66,93 (2.635) | 52,42 (2.064) | 61,11 (2.406) | 10,74 (.423) | 15,37 (.605) | 10,90 (.429) | 6,94 (.273) | 0,76 (.030) |

## 40 A High Power 90° — Standard Footprint .489♦ or .454 inch♦♦ (Sizes DE-DC)

Plug

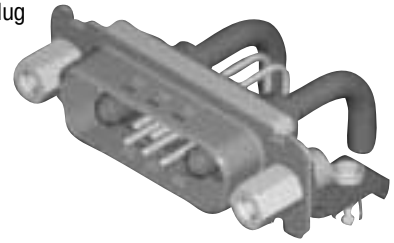

Reader's Resource
For contact cavity arrangements, see page 222.
For P.C. hole patterns, see pages 244-245.
For panel cutouts, see page 221.
For alternate bracket configuration (when connectors are supplied without boardlocks), see page 226.

Part Numbers with Metal Bracket and Rivnut #4-40 UNC

| Shell Size | Layout | Part Number Without Screw Locks Without Boardlocks | Part Number Without Screw Locks With Boardlocks | Part Number With Screw Locks Without Boardlocks | Part Number With Screw Locks With Boardlocks |
|---|---|---|---|---|---|
| DE | 5W1 | DEMP5H1PJK87 | DEMC5H1PJK87 | DEMD5H1PJK87 | DEMG5H1PJK87 |
| DA | 7W2 | DAMP7H2PJK87 | DAMC7H2PJK87 | DAMD7H2PJK87 | DAMG7H2PJK87 |
| DA | 11W1 | DAMP11H1PJK87 | DAMC11H1PJK87 | DAMD11H1PJK87 | DAMG11H1PJK87 |
| DA | 3W3 | DAMP3H3PJK87 | DAMC3H3PJK87 | DAMD3H3PJK87 | DAMG3H3PJK87 |
| DA | 3WK3♣ | DAMP3HK3PJK87TM | DAMC3HK3PJK87TM | DAMD3HK3PJK87TM | DAMG3HK3PJK87TM |
| DB | 5W5 | DBMP5H5PJK87 | DBMC5H5PJK87 | DBMD5H5PJK87 | DBMG5H5PJK87 |
| DB | 9W4 | DBMP9H4PJK87 | DBMC9H4PJK87 | DBMD9H4PJK87 | DBMG9H4PJK87 |
| DB | 13W3 | DBMP13H3PJK87 | DBMC13H3PJK87 | DBMD13H3PJK87 | DBMG13H3PJK87 |
| DB | 17W2 | DBMP17H2PJK87 | DBMC17H2PJK87 | DBMD17H2PJK87 | DBMG17H2PJK87 |
| DB | 21W1 | DBMP21H1PJK87 | DBMC21H1PJK87 | DBMD21H1PJK87 | DBMG21H1PJK87 |
| DC | 8W8 | DCMP8H8PJK87 | DCMC8H8PJK87 | DCMD8H8PJK87 | DCMG8H8PJK87 |
| DC | 13W6 | DCMP13H6PJK87 | DCMC13H6PJK87 | DCMD13H6PJK87 | DCMG13H6PJK87 |
| DC | 17W5 | DCMP17H5PJK87 | DCMC17H5PJK87 | DCMD17H5PJK87 | DCMG17H5PJK87 |
| DC | 21WA4 | DCMP21HA4PJK87 | DCMC21HA4PJK87 | DCMD21HA4PJK87 | DCMG21HA4PJK87 |
| DC | 25W3 | DCMP25H3PJK87 | DCMC25H3PJK87 | DCMD25H3PJK87 | DCMG25H3PJK87 |
| DC | 27W2 | DCMP27H2PJK87 | DCMC27H2PJK87 | DCMD27H2PJK87 | DCMG27H2PJK87 |

Note: For contacts with 30 microinches gold substitute K127 for K87. Example: DEMP5H1PJK127
For DD shell sizes, see page 62.
♣ Keyed.

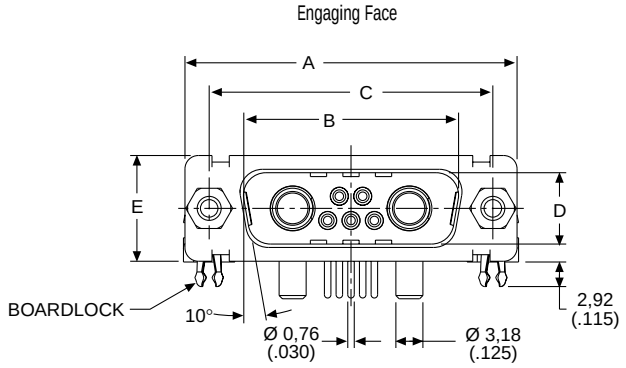


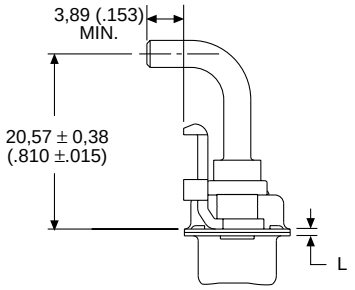


Screw lock, boardlock, and signal contacts removed for clarity

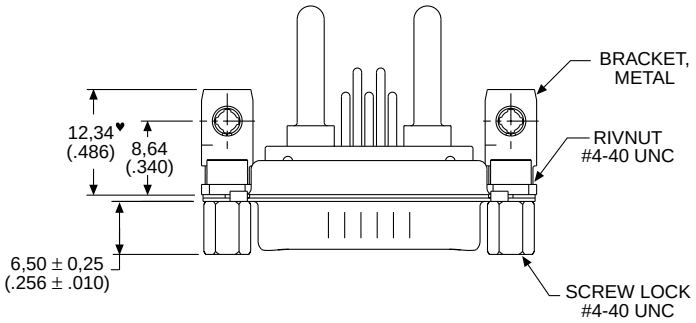


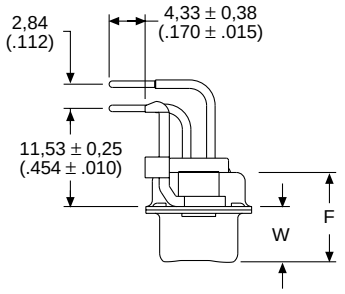


Screw lock, boardlock, and high power contact removed for clarity

Note: ♥ Dimension varies with alternate bracket configuration, see Reader's Resource page 226.

Dimensions

| Shell Size | A ±0,38 (.015) | B ±0,13 (.005) | C ±0,13 (.005) | D ±0,13 (.005) | E ±0,38 (.015) | F ±0,25 (.010) | W ±0,368 (.0145) | W ±0,41 (.016) | L ±0,25 (.010) |
|---|---|---|---|---|---|---|---|---|---|
| DE | 30,81 (1.213) | 16,92 (.666) | 24,99 (.984) | 8,36 (.329) | 12,55 (.494) | 10,72 (.422) | 6,693 (.2635) | — | 0,76 (.030) |
| DA | 39,14 (1.541) | 25,25 (.994) | 33,32 (1.312) | 8,36 (.329) | 12,55 (.494) | 10,72 (.422) | 6,693 (.2635) | — | 0,76 (.030) |
| DB | 53,04 (2.088) | 38,96 (1.534) | 47,04 (1.852) | 8,36 (.329) | 12,55 (.494) | 10,82 (.426) | — | 6,84 (.269) | 0,99 (.039) |
| DC | 69,32 (2.729) | 55,42 (2.182) | 63,50 (2.500) | 8,36 (.329) | 12,55 (.494) | 10,82 (.426) | — | 6,84 (.269) | 0,99 (.039) |

♦ Connector footprint measured from the front shell.
♦♦ Connector footprint measured from the rear shell.



Dimensions are shown in mm (inch)
Dimensions subject to change

## 40 A High Power 90° — Standard Footprint .489♦ or .454 inch♦♦ (Sizes DE-DC)

Receptacle

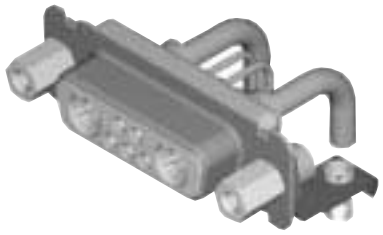

Reader's Resource
For contact cavity arrangements, see page 223.
For P.C. hole patterns, see pages 247-248.
For panel cutouts, see page 221.
For alternate bracket configuration (when connectors are supplied without boardlocks), see page 226.

Part Numbers with Metal Bracket and Rivnut #4-40 UNC

| Shell Size | Layout | Part Number Without Screw Locks Without Boardlocks | Part Number Without Screw Locks With Boardlocks | Part Number With Screw Locks Without Boardlocks | Part Number With Screw Locks With Boardlocks |
|---|---|---|---|---|---|
| DE | 5W1 | DEMP5H1SJA197 | DEMC5H1SJA197 | DEMD5H1SJA197 | DEMG5H1SJA197 |
| DA | 7W2 | DAMP7H2SJA197 | DAMC7H2SJA197 | DAMD7H2SJA197 | DAMG7H2SJA197 |
| DA | 11W1 | DAMP11H1SJA197 | DAMC11H1SJA197 | DAMD11H1SJA197 | DAMG11H1SJA197 |
| DA | 3W3 | DAMP3H3SJA197 | DAMC3H3SJA197 | DAMD3H3SJA197 | DAMG3H3SJA197 |
| DA | 3WK3♣ | DAMP3HK3SJA197TM | DAMC3HK3SJA197TM | DAMD3HK3SJA197TM | DAMG3HK3SJA197TM |
| DB | 5W5 | DBMP5H5SJA197 | DBMC5H5SJA197 | DBMD5H5SJA197 | DBMG5H5SJA197 |
| DB | 9W4 | DBMP9H4SJA197 | DBMC9H4SJA197 | DBMD9H4SJA197 | DBMG9H4SJA197 |
| DB | 13W3 | DBMP13H3SJA197 | DBMC13H3SJA197 | DBMD13H3SJA197 | DBMG13H3SJA197 |
| DB | 17W2 | DBMP17H2SJA197 | DBMC17H2SJA197 | DBMD17H2SJA197 | DBMG17H2SJA197 |
| DB | 21W1 | DBMP21H1SJA197 | DBMC21H1SJA197 | DBMD21H1SJA197 | DBMG21H1SJA197 |
| DC | 8W8 | DCMP8H8SJA197 | DCMC8H8SJA197 | DCMD8H8SJA197 | DCMG8H8SJA197 |
| DC | 13W6 | DCMP13H6SJA197 | DCMC13H6SJA197 | DCMD13H6SJA197 | DCMG13H6SJA197 |
| DC | 17W5 | DCMP17H5SJA197 | DCMC17H5SJA197 | DCMD17H5SJA197 | DCMG17H5SJA197 |
| DC | 21WA4 | DCMP21HA4SJA197 | DCMC21HA4SJA197 | DCMD21HA4SJA197 | DCMG21HA4SJA197 |
| DC | 25W3 | DCMP25H3SJA197 | DCMC25H3SJA197 | DCMD25H3SJA197 | DCMG25H3SJA197 |
| DC | 27W2 | DCMP27H2SJA197 | DCMC27H2SJA197 | DCMD27H2SJA197 | DCMG27H2SJA197 |

Note: For contacts with 30 microinches of gold substitute K126 for A197. Example: DEMP5H1SJK126
For DD shell sizes, see page 63.
♣ Keyed.

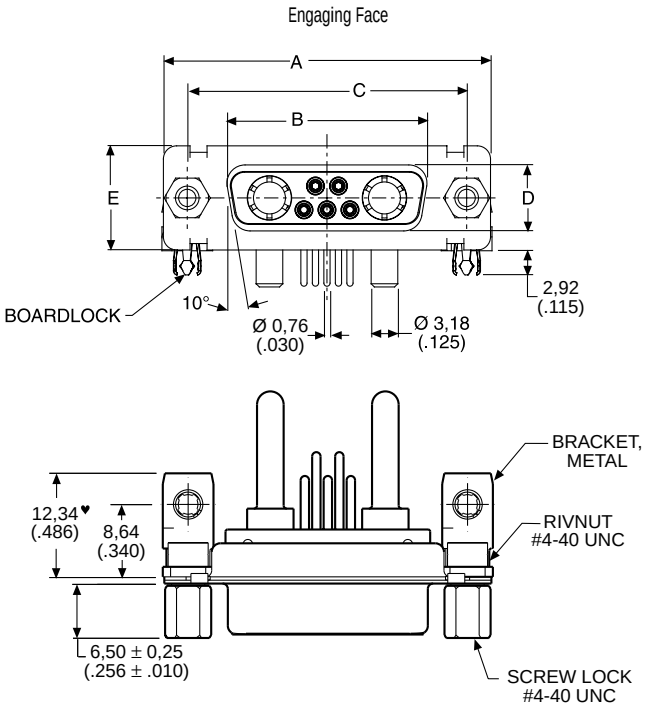


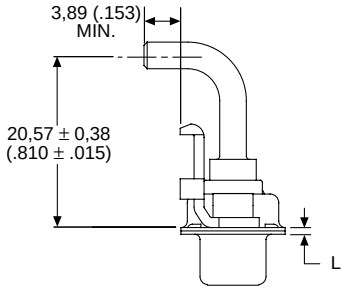


Screw lock, boardlock, and signal contacts removed for clarity

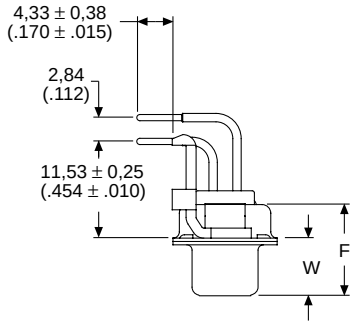


Screw lock, boardlock, and high power contact removed for clarity

Note: ♥ Dimension varies with alternate bracket configuration, see Reader's Resource page 226.

Dimensions

| Shell Size | A ±0,38 (.015) | B ±0,13 (.005) | C ±0,13 (.005) | D ±0,13 (.005) | E ±0,38 (.015) | F ±0,25 (.010) | W ±0,38 (.015) | L ±0,25 (.010) |
|---|---|---|---|---|---|---|---|---|
| DE | 30,81 (1.213) | 16,33 (.643) | 24,99 (.984) | 7,90 (.311) | 12,55 (.494) | 10,90 (.429) | 6,94 (.273) | 0,76 (.030) |
| DA | 39,14 (1.541) | 24,66 (.971) | 33,32 (1.312) | 7,90 (.311) | 12,55 (.494) | 10,90 (.429) | 6,94 (.273) | 0,76 (.030) |
| DB | 53,04 (2.088) | 38,38 (1.511) | 47,04 (1.852) | 7,90 (.311) | 12,55 (.494) | 10,90 (.429) | 6,94 (.273) | 0,76 (.030) |
| DC | 69,32 (2.729) | 54,84 (2.159) | 63,50 (2.500) | 7,90 (.311) | 12,55 (.494) | 10,90 (.429) | 6,94 (.273) | 0,76 (.030) |

♦ Connector footprint measured from the front shell.
♦♦ Connector footprint measured from the rear shell.

## 40 A High Power 90° — Standard Footprint .489♦ or .454 inch♦♦ (Size DD)

Plug

Part Numbers with Metal Bracket and Rivnut #4-40 UNC

| Shell Size | Layout | Part Number Without Screw Locks Without Boardlocks | Part Number Without Screw Locks With Boardlocks | Part Number With Screw Locks Without Boardlocks | Part Number With Screw Locks With Boardlocks |
|---|---|---|---|---|---|
| DD | 24W7 | DDMP24H7PJK87 | DDMC24H7PJK87 | DDMD24H7PJK87 | DDMG24H7PJK87 |
| DD | 36W4 | DDMP36H4PJK87 | DDMC36H4PJK87 | DDMD36H4PJK87 | DDMG36H4PJK87 |
| DD | 43W2 | DDMP43H2PJK87 | DDMC43H2PJK87 | DDMD43H2PJK87 | DDMG43H2PJK87 |
| DD | 47W1 | DDMP47H1PJK87 | DDMC47H1PJK87 | DDMD47H1PJK87 | DDMG47H1PJK87 |

Note: For contacts with 30 microinches gold substitute K127 for K87. Example: DDMP24H7PJK127

Reader's Resource
For contact cavity arrangements, see page 222.
For P.C. hole patterns, see page 246.
For panel cutouts, see page 221.
For alternate bracket configuration (when connectors are supplied without boardlocks), see page 226.

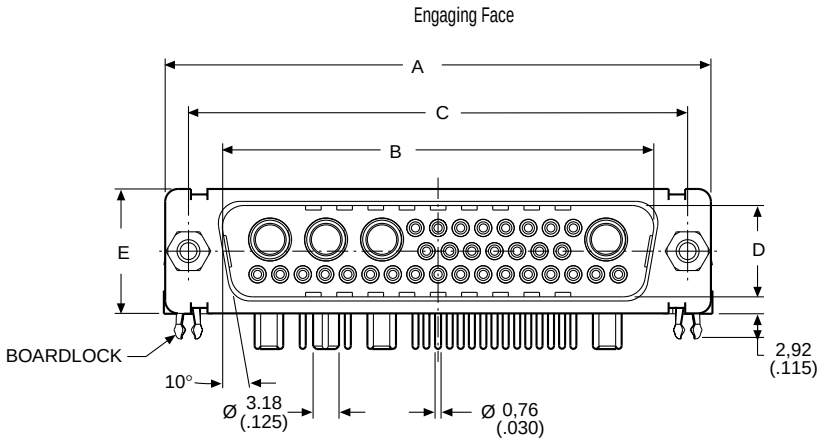


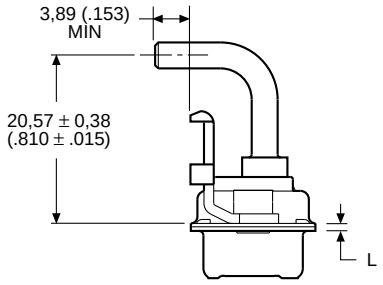


Screw lock, boardlock, and signal contacts removed for clarity

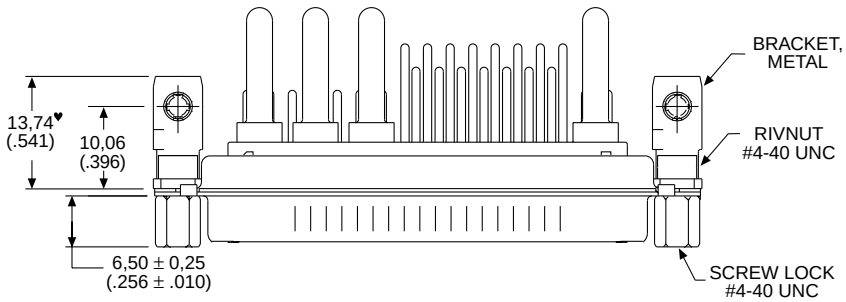


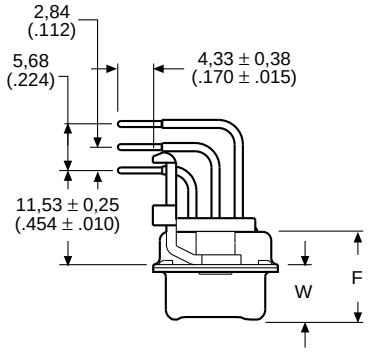


Screw lock, boardlock, and high power contact removed for clarity

Note: ♥ Dimension varies with alternate bracket configuration, see Reader's Resource page 226.

Dimensions

| Shell Size | A ±0,38 (.015) | B ±0,13 (.005) | C ±0,13 (.005) | D ±0,13 (.005) | E ±0,38 (.015) | F ±0,25 (.010) | W ±0,41 (.016) | L ±0,25 (.010) |
|---|---|---|---|---|---|---|---|---|
| DD | 66,93 (2.635) | 52,81 (2.079) | 61,11 (2.406) | 11,07 (.436) | 15,37 (.605) | 10,82 (.426) | 6,84 (.269) | 0,99 (.039) |

♦ Connector footprint measured from the front shell.
♦♦ Connector footprint measured from the rear shell.



Dimensions are shown in mm (inch)
Dimensions subject to change

## 40 A High Power 90° — Standard Footprint .489♦ or .454 inch♦♦ (Size DD)

Receptacle

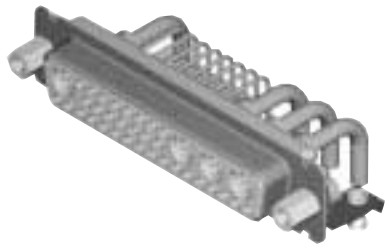

Part Numbers with Metal Bracket and Rivnut #4-40 UNC

| Shell Size | Layout | Part Number Without Screw Locks Without Boardlocks | Part Number Without Screw Locks With Boardlocks | Part Number With Screw Locks Without Boardlocks | Part Number With Screw Locks With Boardlocks |
|---|---|---|---|---|---|
| DD | 24W7 | DDMP24H7SJA197 | DDMC24H7SJA197 | DDMD24H7SJA197 | DDMG24H7SJA197 |
| DD | 36W4 | DDMP36H4SJA197 | DDMC36H4SJA197 | DDMD36H4SJA197 | DDMG36H4SJA197 |
| DD | 43W2 | DDMP43H2SJA197 | DDMC43H2SJA197 | DDMD43H2SJA197 | DDMG43H2SJA197 |
| DD | 47W1 | DDMP47H1SJA197 | DDMC47H1SJA197 | DDMD47H1SJA197 | DDMG47H1SJA197 |

Note: For contacts with 30 microinches gold substitute K126 for A197. Example: DDMP24H7SJK126

Reader's Resource

For contact cavity arrangements, see page 223.
For P.C. hole patterns, see page 249.
For panel cutouts, see page 221.
For alternate bracket configuration (when connectors are supplied without boardlocks), see page 226.

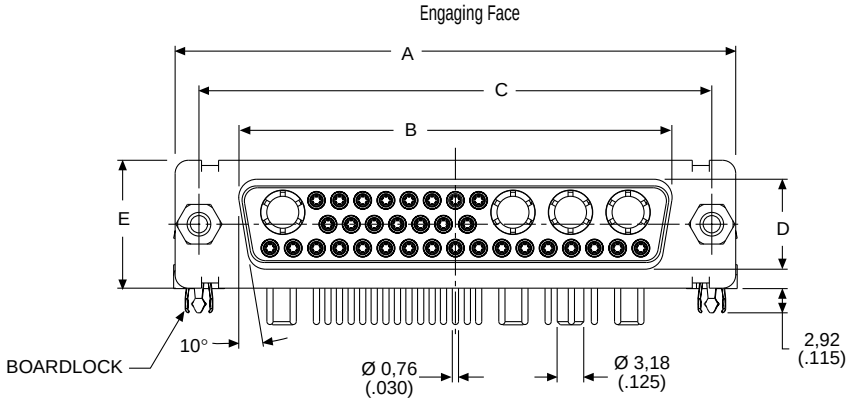


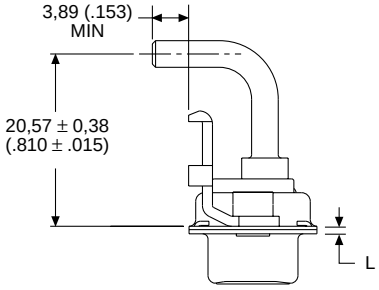


Screw lock, boardlock, and signal contacts removed for clarity

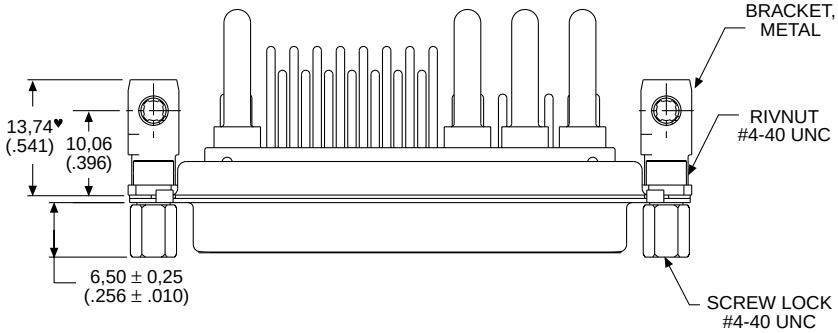


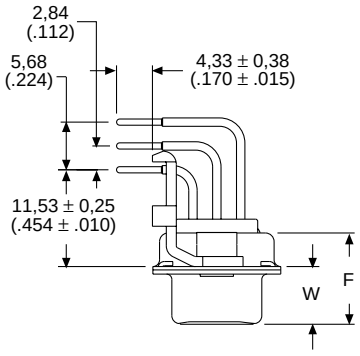


Screw lock, boardlock, and high power contact removed for clarity

Note: ♥ Dimension varies with alternate bracket configuration, see page 226.

Dimensions

| Shell Size | A ±0,38 (.015) | B ±0,13 (.005) | C ±0,13 (.005) | D ±0,13 (.005) | E ±0,38 (.015) | F ±0,25 (.010) | W ±0,38 (.015) | L ±0,25 (.010) |
|---|---|---|---|---|---|---|---|---|
| DD | 66,93 (2.635) | 52,42 (2.064) | 61,11 (2.406) | 10,74 (.423) | 15,37 (.605) | 10,90 (.429) | 6,94 (.273) | 0,76 (.030) |

♦ Connector footprint measured from the front shell.
♦ ♦ Connector footprint measured from the rear shell.

## 40 A High Power 90° — European Footprint 10,2♦ or 9,4 mm♦♦ (Sizes DE-DC)

Plug

Reader's Resource
For contact cavity arrangements, see page 222.
For P.C. hole patterns, see pages 250-251.
For panel cutouts, see page 221.
For alternate bracket configuration (when connectors are supplied without boardlocks), see page 226.

Part Numbers with Metal Bracket and Rivnut #4-40 UNC

| Shell Size | Layout | Part Number Without Screw Locks Without Boardlocks | Part Number Without Screw Locks With Boardlocks | Part Number With Screw Locks Without Boardlocks | Part Number With Screw Locks With Boardlocks |
|---|---|---|---|---|---|
| DE | 5W1 | DEMP5P1PVK87 | DEMC5P1PVK87 | DEMD5P1PVK87 | DEMG5P1PVK87 |
| DA | 7W2 | DAMP7P2PVK87 | DAMC7P2PVK87 | DAMD7P2PVK87 | DAMG7P2PVK87 |
| DA | 11W1 | DAMP11P1PVK87 | DAMC11P1PVK87 | DAMD11P1PVK87 | DAMG11P1PVK87 |
| DA | 3W3 | DAMP3P3PVK87 | DAMC3P3PVK87 | DAMD3P3PVK87 | DAMG3P3PVK87 |
| DA | 3WK3♣ | DAMP3PK3PVK87TM | DAMC3PK3PVK87TM | DAMD3PK3PVK87TM | DAMG3PK3PVK87TM |
| DB | 5W5 | DBMP5P5PVK87 | DBMC5P5PVK87 | DBMD5P5PVK87 | DBMG5P5PVK87 |
| DB | 9W4 | DBMP9P4PVK87 | DBMC9P4PVK87 | DBMD9P4PVK87 | DBMG9P4PVK87 |
| DB | 13W3 | DBMP13P3PVK87 | DBMC13P3PVK87 | DBMD13P3PVK87 | DBMG13P3PVK87 |
| DB | 17W2 | DBMP17P2PVK87 | DBMC17P2PVK87 | DBMD17P2PVK87 | DBMG17P2PVK87 |
| DB | 21W1 | DBMP21P1PVK87 | DBMC21P1PVK87 | DBMD21P1PVK87 | DBMG21P1PVK87 |
| DC | 8W8 | DCMP8P8PVK87 | DCMC8P8PVK87 | DCMD8P8PVK87 | DCMG8P8PVK87 |
| DC | 13W6 | DCMP13P6PVK87 | DCMC13P6PVK87 | DCMD13P6PVK87 | DCMG13P6PVK87 |
| DC | 17W5 | DCMP17P5PVK87 | DCMC17P5PVK87 | DCMD17P5PVK87 | DCMG17P5PVK87 |
| DC | 21WA4 | DCMP21PA4PVK87 | DCMC21PA4PVK87 | DCMD21PA4PVK87 | DCMG21PA4PVK87 |
| DC | 25W3 | DCMP25P3PVK87 | DCMC25P3PVK87 | DCMD25P3PVK87 | DCMG25P3PVK87 |
| DC | 27W2 | DCMP27P2PVK87 | DCMC27P2PVK87 | DCMD27P2PVK87 | DCMG27P2PVK87 |

For M3 threads replace MP with MS, MC with ML, MD with MO, MG with MJ.
Notes: For tin plated PC tails add A226 (signal contacts only). Example DEMP5P1PVK87A226
For performance class 2 substitute K127 for K87. Example: DEMP5P1PVK127
♣ Keyed.

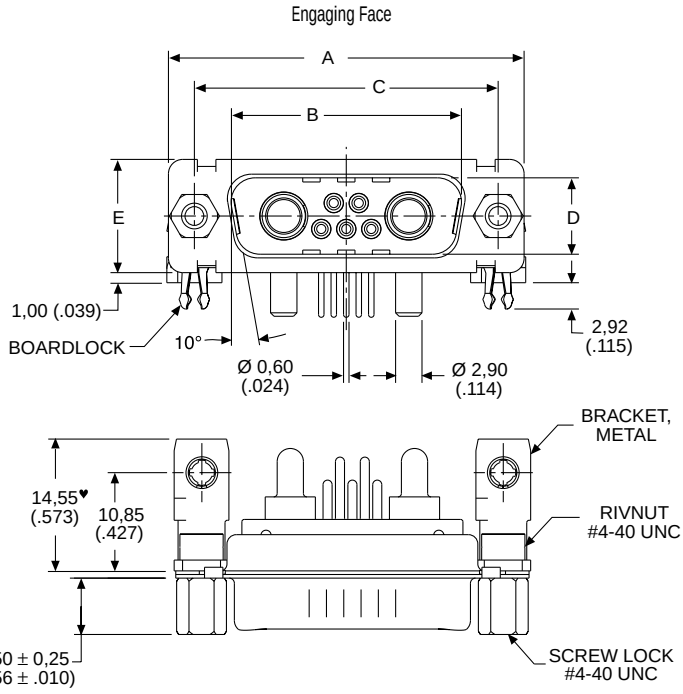


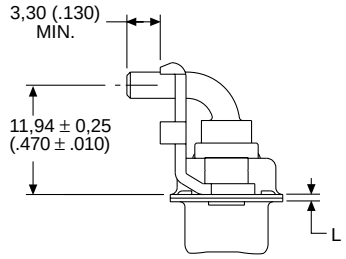


Screw lock, boardlock, and signal contacts removed for clarity

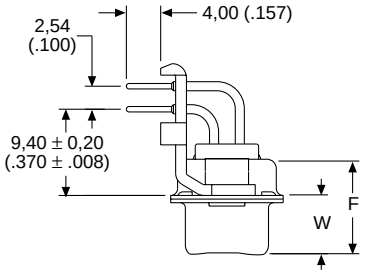


Screw lock, boardlock, and high power contact removed for clarity

Note: ♥ Dimension varies with alternate bracket configuration, see Reader's Resource page 226.

Dimensions

| Shell Size | A ±0,38 (.015) | B ±0,13 (.005) | C ±0,13 (.005) | D ±0,13 (.005) | E ±0,38 (.015) | F ±0,25 (.010) | W ±0,368 (.0145) | W ±0,41 (.016) | L ±0,25 (.010) |
|---|---|---|---|---|---|---|---|---|---|
| DE | 30,81 (1.213) | 16,92 (.666) | 24,99 (.984) | 8,36 (.329) | 12,55 (.494) | 10,72 (.422) | 6,693 (.2635) | — | 0,76 (.030) |
| DA | 39,14 (1.541) | 25,25 (.994) | 33,32 (1.312) | 8,36 (.329) | 12,55 (.494) | 10,72 (.422) | 6,693 (.2635) | — | 0,76 (.030) |
| DB | 53,04 (2.088) | 38,96 (1.534) | 47,04 (1.852) | 8,36 (.329) | 12,55 (.494) | 10,82 (.426) | — | 6,84 (.269) | 0,99 (.039) |
| DC | 69,32 (2.729) | 55,42 (2.182) | 63,50 (2.500) | 8,36 (.329) | 12,55 (.494) | 10,82 (.426) | — | 6,84 (.269) | 0,99 (.039) |

♦ Connector footprint measured from the front shell.
♦♦ Connector footprint measured from the rear shell.



Dimensions are shown in mm (inch)
Dimensions subject to change

## 40 A High Power 90° — European Footprint 10,2♦ or 9,4 mm♦♦ (Sizes DE-DC)

Receptacle

Reader's Resource
For contact cavity arrangements, see page 223.
For P.C. hole patterns, see pages 252-253.
For panel cutouts, see page 221.
For alternate bracket configuration (when connectors are supplied without boardlocks), see page 226.

Part Numbers with Metal Bracket and Rivnut #4-40 UNC

| Shell Size | Layout | Part Number Without Screw Locks Without Boardlocks | Part Number Without Screw Locks With Boardlocks | Part Number With Screw Locks Without Boardlocks | Part Number With Screw Locks With Boardlocks |
|---|---|---|---|---|---|
| DE | 5W1 | DEMP5P1SVA197 | DEMC5P1SVA197 | DEMD5P1SVA197 | DEMG5P1SVA197 |
| DA | 7W2 | DAMP7P2SVA197 | DAMC7P2SVA197 | DAMD7P2SVA197 | DAMG7P2SVA197 |
| DA | 11W1 | DAMP11P1SVA197 | DAMC11P1SVA197 | DAMD11P1SVA197 | DAMG11P1SVA197 |
| DA | 3W3 | DAMP3P3SVA197 | DAMC3P3SVA197 | DAMD3P3SVA197 | DAMG3P3SVA197 |
| DA | 3WK3♣ | DAMP3PK3SVA197TM | DAMC3PK3SVA197TM | DAMD3PK3SVA197TM | DAMG3PK3SVA197TM |
| DB | 5W5 | DBMP5P5SVA197 | DBMC5P5SVA197 | DBMD5P5SVA197 | DBMG5P5SVA197 |
| DB | 9W4 | DBMP9P4SVA197 | DBMC9P4SVA197 | DBMD9P4SVA197 | DBMG9P4SVA197 |
| DB | 13W3 | DBMP13P3SVA197 | DBMC13P3SVA197 | DBMD13P3SVA197 | DBMG13P3SVA197 |
| DB | 17W2 | DBMP17P2SVA197 | DBMC17P2SVA197 | DBMD17P2SVA197 | DBMG17P2SVA197 |
| DB | 21W1 | DBMP21P1SVA197 | DBMC21P1SVA197 | DBMD21P1SVA197 | DBMG21P1SVA197 |
| DC | 8W8 | DCMP8P8SVA197 | DCMC8P8SVA197 | DCMD8P8SVA197 | DCMG8P8SVA197 |
| DC | 13W6 | DCMP13P6SVA197 | DCMC13P6SVA197 | DCMD13P6SVA197 | DCMG13P6SVA197 |
| DC | 17W5 | DCMP17P5SVA197 | DCMC17P5SVA197 | DCMD17P5SVA197 | DCMG17P5SVA197 |
| DC | 21WA4 | DCMP21PA4SVA197 | DCMC21PA4SVA197 | DCMD21PA4SVA197 | DCMG21PA4SVA197 |
| DC | 25W3 | DCMP25P3SVA197 | DCMC25P3SVA197 | DCMD25P3SVA197 | DCMG25P3SVA197 |
| DC | 27W2 | DCMP27P2SVA197 | DCMC27P2SVA197 | DCMD27P2SVA197 | DCMG27P2SVA197 |

For M3 threads replace MP with MS, MC with ML, MD with MO, MG with MJ.
Notes: For performance class 2 substitute K126 for A197. Example: DEMP5P1SVK126
♣ Keyed.

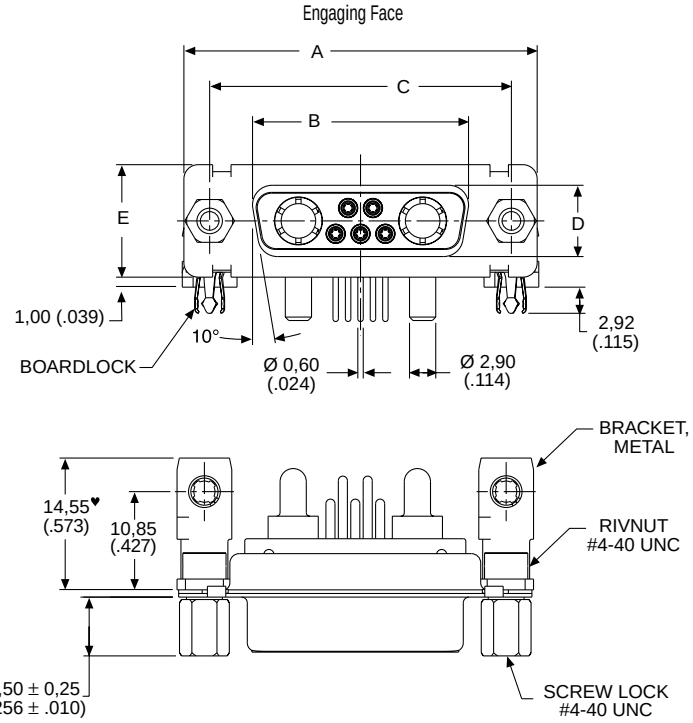


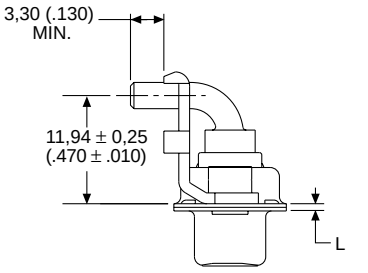


Screw lock, boardlock, and signal contacts removed for clarity

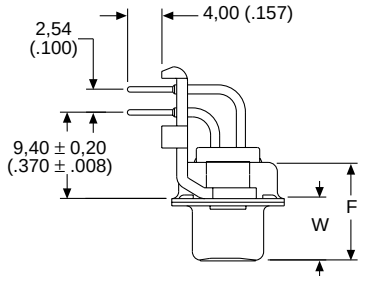


Screw lock, boardlock, and high power contact removed for clarity

Note: ♥ Dimension varies with alternate bracket configuration, see Reader's Resource page 226.

Dimensions

| Shell Size | A ±0,38 (.015) | B ±0,13 (.005) | C ±0,13 (.005) | D ±0,13 (.005) | E ±0,38 (.015) | F ±0,25 (.010) | W ±0,38 (.015) | L ±0,25 (.010) |
|---|---|---|---|---|---|---|---|---|
| DE | 30,81 (1.213) | 16,33 (.643) | 24,99 (.984) | 7,90 (.311) | 12,55 (.494) | 10,90 (.429) | 6,94 (.273) | 0.76 (.030) |
| DA | 39,14 (1.541) | 24,66 (.971) | 33,32 (1.312) | 7,90 (.311) | 12,55 (.494) | 10,90 (.429) | 6,94 (.273) | 0,76 (.030) |
| DB | 53,04 (2.088) | 38,38 (1.511) | 47,04 (1.852) | 7,90 (.311) | 12,55 (.494) | 10,90 (.429) | 6,94 (.273) | 0,76 (.030) |
| DC | 69,32 (2.729) | 54,84 (2.159) | 63,50 (2.500) | 7,90 (.311) | 12,55 (.494) | 10,90 (.429) | 6,94 (.273) | 0,76 (.030) |

♦ Connector footprint measured from the front shell.
♦♦ Connector footprint measured from the rear shell.

## 40 A High Power Straight — Standard PC Tails (Sizes DE-DC)

Plug

Reader's Resource
For contact cavity arrangements, see page 222.
For P.C. hole patterns, see pages 254-255.
For panel cutouts, see page 221.

Part Numbers with Standoff #4-40 UNC

| Shell Size | Layout | Part Number Without Screw Locks Without Boardlocks | Part Number Without Screw Locks With Boardlocks | Part Number With Screw Locks With Boardlocks |
|---|---|---|---|---|
| DE | 5W1 | DEMV5H1PNK87 | DEMZ5H1PNK87 | DEMN5H1PNK87 |
| DA | 7W2 | DAMV7H2PNK87 | DAMZ7H2PNK87 | DAMN7H2PNK87 |
| DA | 11W1 | DAMV11H1PNK87 | DAMZ11H1PNK87 | DAMN11H1PNK87 |
| DA | 3W3 | DAMV3H3PNK87 | DAMZ3H3PNK87 | DAMN3H3PNK87 |
| DA | 3WK3♣ | DAMV3HK3PNK87TM | DAMZ3HK3PNK87TM | DAMN3HK3PNK87TM |
| DB | 5W5 | DBMV5H5PNK87 | DBMZ5H5PNK87 | DBMN5H5PNK87 |
| DB | 9W4 | DBMV9H4PNK87 | DBMZ9H4PNK87 | DBMN9H4PNK87 |
| DB | 13W3 | DBMV13H3PNK87 | DBMZ13H3PNK87 | DBMN13H3PNK87 |
| DB | 17W2 | DBMV17H2PNK87 | DBMZ17H2PNK87 | DBMN17H2PNK87 |
| DB | 21W1 | DBMV21H1PNK87 | DBMZ21H1PNK87 | DBMN21H1PNK87 |
| DC | 8W8 | DCMV8H8PNK87 | DCMZ8H8PNK87 | DCMN8H8PNK87 |
| DC | 13W6 | DCMV13H6PNK87 | DCMZ13H6PNK87 | DCMN13H6PNK87 |
| DC | 17W5 | DCMV17H5PNK87 | DCMZ17H5PNK87 | DCMN17H5PNK87 |
| DC | 21WA4 | DCMV21HA4PNK87 | DCMZ21HA4PNK87 | DCMN21HA4PNK87 |
| DC | 25W3 | DCMV25H3PNK87 | DCMZ25H3PNK87 | DCMN25H3PNK87 |
| DC | 27W2 | DCMV27H2PNK87 | DCMZ27H2PNK87 | DCMN27H2PNK87 |

Note: For contacts with 30 microinches gold substitute K127 for K87. Example: DEMV5H1PNK127
For DD shell sizes, see page 68.
♣ Keyed.

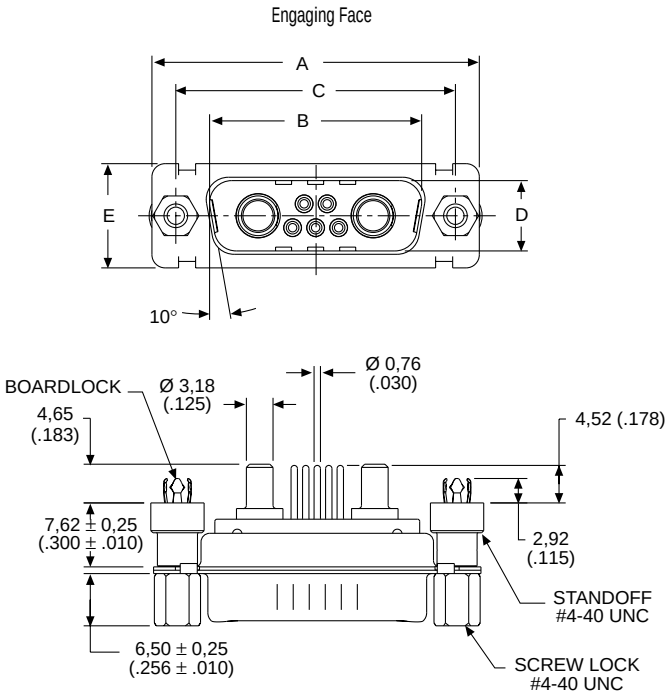


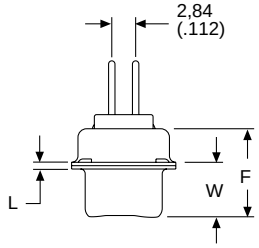


Screw lock, boardlock and high power contact removed for clarity

Dimensions

| Shell Size | A ±0,38 (.015) | B ±0,13 (.005) | C ±0,13 (.005) | D ±0,13 (.005) | E ±0,38 (.015) | F ±0,25 (.010) | W ±0,368 (.0145) | W ±0,41 (.016) | L ±0,25 (.010) |
|---|---|---|---|---|---|---|---|---|---|
| DE | 30,81 (1.213) | 16,92 (.666) | 24,99 (.984) | 8,36 (.329) | 12,55 (.494) | 10,72 (.422) | 6,693 (.2635) | — | 0,76 (.030) |
| DA | 39,14 (1.541) | 25,25 (.994) | 33,32 (1.312) | 8,36 (.329) | 12,55 (.494) | 10,72 (.422) | 6,693 (.2635) | — | 0,76 (.030) |
| DB | 53,04 (2.088) | 38,96 (1.534) | 47,04 (1.852) | 8,36 (.329) | 12,55 (.494) | 10,82 (.426) | — | 6,84 (.269) | 0,99 (.039) |
| DC | 69,32 (2.729) | 55,42 (2.182) | 63,50 (2.500) | 8,36 (.329) | 12,55 (.494) | 10,82 (.426) | — | 6,84 (.269) | 0,99 (.039) |


Dimensions are shown in mm (inch)
Dimensions subject to change

## 40 A High Power Straight — Standard PC Tails (Sizes DE-DC)

Receptacle

Reader's Resource
For contact cavity arrangements, see page 223.
For P.C. hole patterns, see pages 257-258.
For panel cutouts, see page 221.

Part Numbers with Standoff #4-40 UNC

| Shell Size | Layout | Part Number Without Screw Locks Without Boardlocks | Part Number Without Screw Locks With Boardlocks | Part Number With Screw Locks With Boardlocks |
|---|---|---|---|---|
| DE | 5W1 | DEMV5H1SNA197 | DEMZ5H1SNA197 | DEMN5H1SNA197 |
| DA | 7W2 | DAMV7H2SNA197 | DAMZ7H2SNA197 | DAMN7H2SNA197 |
| DA | 11W1 | DAMV11H1SNA197 | DAMZ11H1SNA197 | DAMN11H1SNA197 |
| DA | 3W3 | DAMV3H3SNA197 | DAMZ3H3SNA197 | DAMN3H3SNA197 |
| DA | 3WK3♣ | DAMV3HK3SNA197TM | DAMZ3HK3SNA197TM | DAMN3HK3SNA197TM |
| DB | 5W5 | DBMV5H5SNA197 | DBMZ5H5SNA197 | DBMN5H5SNA197 |
| DB | 9W4 | DBMV9H4SNA197 | DBMZ9H4SNA197 | DBMN9H4SNA197 |
| DB | 13W3 | DBMV13H3SNA197 | DBMZ13H3SNA197 | DBMN13H3SNA197 |
| DB | 17W2 | DBMV17H2SNA197 | DBMZ17H2SNA197 | DBMN17H2SNA197 |
| DB | 21W1 | DBMV21H1SNA197 | DBMZ21H1SNA197 | DBMN21H1SNA197 |
| DC | 8W8 | DCMV8H8SNA197 | DCMZ8H8SNA197 | DCMN8H8SNA197 |
| DC | 13W6 | DCMV13H6SNA197 | DCMZ13H6SNA197 | DCMN13H6SNA197 |
| DC | 17W5 | DCMV17H5SNA197 | DCMZ17H5SNA197 | DCMN17H5SNA197 |
| DC | 21WA4 | DCMV21HA4SNA197 | DCMZ21HA4SNA197 | DCMN21HA4SNA197 |
| DC | 25W3 | DCMV25H3SNA197 | DCMZ25H3SNA197 | DCMN25H3SNA197 |
| DC | 27W2 | DCMV27H2SNA197 | DCMZ27H2SNA197 | DCMN27H2SNA197 |

Note: For contacts with 30 microinches gold substitute K126 for A197. Example: DEMV5H1SNK126
For DD shell sizes, see page 69.
♣ Keyed.

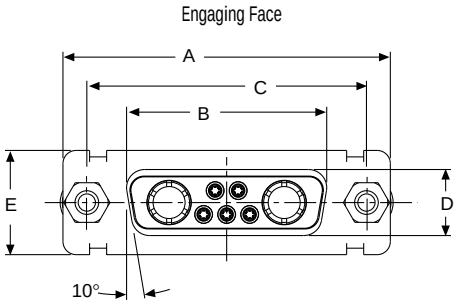


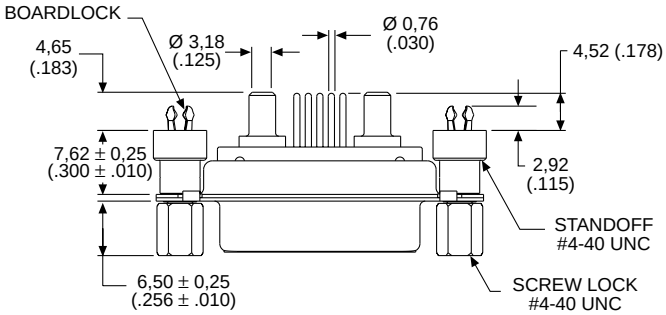


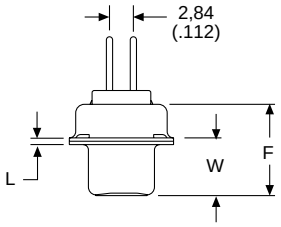


Screw lock, boardlock and high power contact removed for clarity

Dimensions

| Shell Size | A ±0,38 (.015) | B ±0,13 (.005) | C ±0,13 (.005) | D ±0,13 (.005) | E ±0,38 (.015) | F ±0,25 (.010) | W ±0,38 (.015) | L ±0,25 (.010) |
|---|---|---|---|---|---|---|---|---|
| DE | 30,81 (1.213) | 16,33 (.643) | 24,99 (.984) | 7,90 (.311) | 12,55 (.494) | 10,90 (.429) | 6,94 (.273) | 0,76 (.030) |
| DA | 39,14 (1.541) | 24,66 (.971) | 33,32 (1.312) | 7,90 (.311) | 12,55 (.494) | 10,90 (.429) | 6,94 (.273) | 0,76 (.030) |
| DB | 53,04 (2.088) | 38,38 (1.511) | 47,04 (1.852) | 7,90 (.311) | 12,55 (.494) | 10,90 (.429) | 6,94 (.273) | 0,76 (.030) |
| DC | 69,32 (2.729) | 54,84 (2.159) | 63,50 (2.500) | 7,90 (.311) | 12,55 (.494) | 10,90 (.429) | 6,94 (.273) | 0,76 (.030) |

## 40 A High Power Straight — Standard PC Tails (Size DD)

Plug

Part Numbers with Standoff #4-40 UNC

| Shell Size | Layout | Part Number Without Screw Locks Without Boardlocks | Part Number Without Screw Locks With Boardlocks | Part Number With Screw Locks With Boardlocks |
|---|---|---|---|---|
| DD | 24W7 | DDMV24H7PNK87 | DDMZ24H7PNK87 | DDMN24H7PNK87 |
| DD | 36W4 | DDMV36H4PNK87 | DDMZ36H4PNK87 | DDMN36H4PNK87 |
| DD | 43W2 | DDMV43H2PNK87 | DDMZ43H2PNK87 | DDMN43H2PNK87 |
| DD | 47W1 | DDMV47H1PNK87 | DDMZ47H1PNK87 | DDMN47H1PNK87 |

Note: For contacts with 30 microinches gold substitute K127 for K87. Example: DDMV24H7PNK127

Reader's Resource
For contact cavity arrangements, see page 222.
For P.C. hole patterns, see page 256.
For panel cutouts, see page 221.

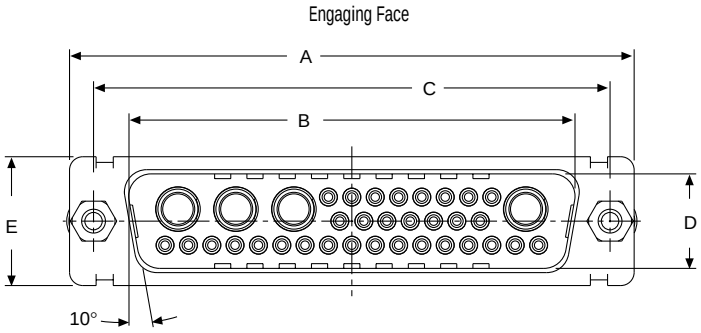


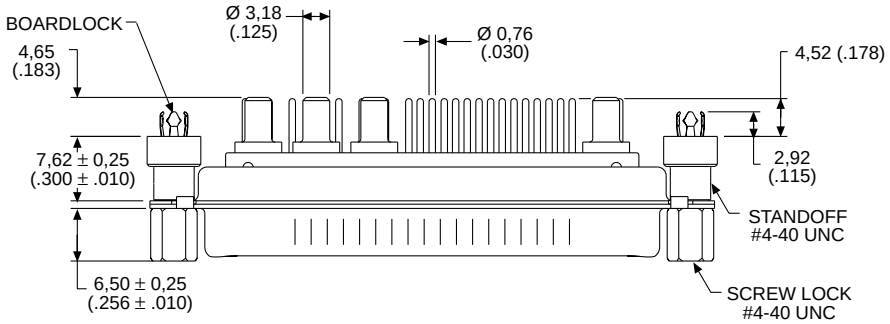


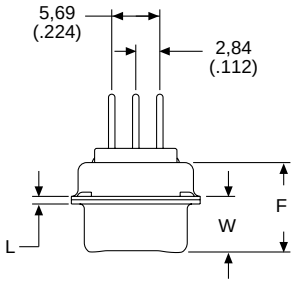


Screw lock, boardlock, and high power contact removed for clarity

Dimensions

| Shell Size | A ±0,38 (.015) | B ±0,13 (.005) | C ±0,13 (.005) | D ±0,13 (.005) | E ±0,38 (.015) | F ±0,25 (.010) | W ±0,41 (.016) | L ±0,25 (.010) |
|---|---|---|---|---|---|---|---|---|
| DD | 66,93 (2.635) | 52,81 (2.079) | 61,11 (2.406) | 11,07 (.436) | 15,37 (.605) | 10,82 (.426) | 6,84 (.269) | 0,99 (.039) |



Dimensions are shown in mm (inch)
Dimensions subject to change

## 40 A High Power Straight — Standard PC Tails (Size DD)

Receptacle

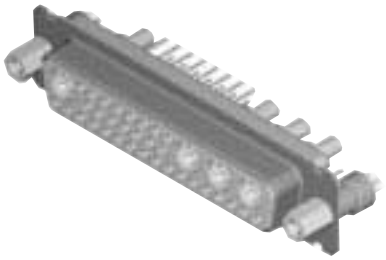

Part Numbers with Standoff #4-40 UNC

| Shell Size | Layout | Part Number Without Screw Locks Without Boardlocks | Part Number Without Screw Locks With Boardlocks | Part Number With Screw Locks With Boardlocks |
|---|---|---|---|---|
| DD | 24W7 | DDMV24H7SNA197 | DDMZ24H7SNA197 | DDMN24H7SNA197 |
| DD | 36W4 | DDMV36H4SNA197 | DDMZ36H4SNA197 | DDMN36H4SNA197 |
| DD | 43W2 | DDMV43H2SNA197 | DDMZ43H2SNA197 | DDMN43H2SNA197 |
| DD | 47W1 | DDMV47H1SNA197 | DDMZ47H1SNA197 | DDMN47H1SNA197 |

Note: For contacts with 30 microinches gold substitute K126 for A197. Example: DDMV24H7SNK126

Reader's Resource
For contact cavity arrangements, see page 223.
For P.C. hole patterns, see page 259.
For panel cutouts, see page 221.

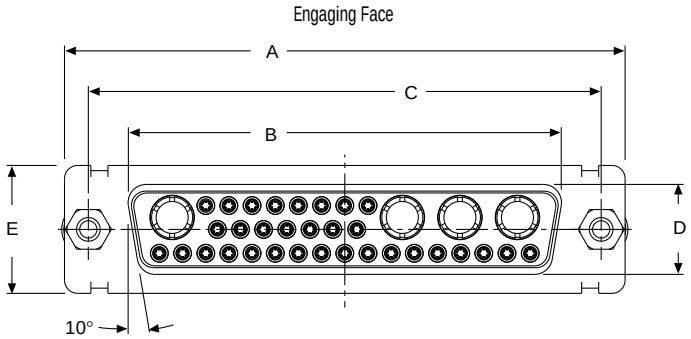


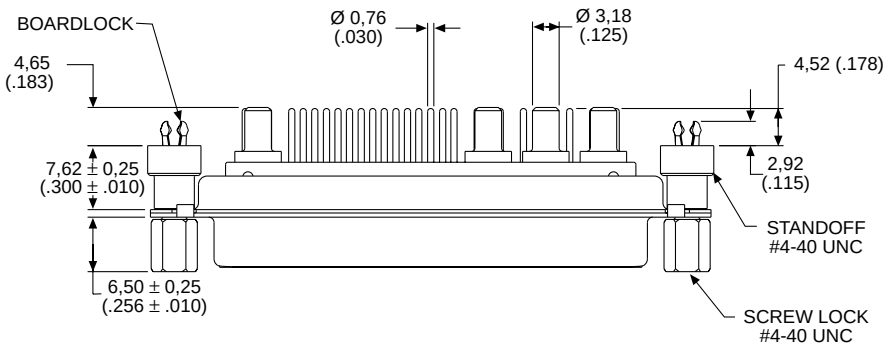


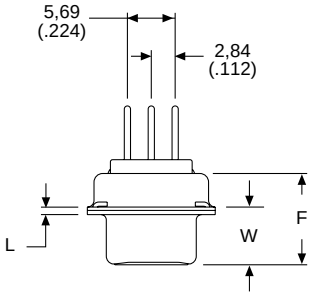


Screw lock, boardlock and high power contact removed for clarity

Dimensions

| Shell Size | A ±0,38 (.015) | B ±0,13 (.005) | C ±0,13 (.005) | D ±0,13 (.005) | E ±0,38 (.015) | F ±0,25 (.010) | W ±0,38 (.015) | L ±0,25 (.010) |
|---|---|---|---|---|---|---|---|---|
| DD | 66,93 (2.635) | 52,42 (2.064) | 61,11 (2.406) | 10,74 (.423) | 15,37 (.605) | 10,90 (.429) | 6,94 (.273) | 0,76 (.030) |

## 40 A High Power Straight — European PC Tails (Sizes DE-DC)

Plug

Reader's Resource
For contact cavity arrangements, see page 222.
For P.C. hole patterns, see pages 254-255.
For panel cutouts, see page 221.

Part Numbers with Standoff #4-40 UNC

| Shell Size | Layout | Part Number Without Screw Locks Without Boardlocks | Part Number Without Screw Locks With Boardlocks | Part Number With Screw Locks With Boardlocks |
|---|---|---|---|---|
| DE | 5W1 | DEMV5H1PYK87 | DEMZ5H1PYK87 | DEMN5H1PYK87 |
| DA | 7W2 | DAMV7H2PYK87 | DAMZ7H2PYK87 | DAMN7H2PYK87 |
| DA | 11W1 | DAMV11H1PYK87 | DAMZ11H1PYK87 | DAMN11H1PYK87 |
| DA | 3W3 | DAMV3H3PYK87 | DAMZ3H3PYK87 | DAMN3H3PYK87 |
| DA | 3WK3♣ | DAMV3HK3PYK87TM | DAMZ3HK3PYK87TM | DAMN3HK3PYK87TM |
| DB | 5W5 | DBMV5H5PYK87 | DBMZ5H5PYK87 | DBMN5H5PYK87 |
| DB | 9W4 | DBMV9H4PYK87 | DBMZ9H4PYK87 | DBMN9H4PYK87 |
| DB | 13W3 | DBMV13H3PYK87 | DBMZ13H3PYK87 | DBMN13H3PYK87 |
| DB | 17W2 | DBMV17H2PYK87 | DBMZ17H2PYK87 | DBMN17H2PYK87 |
| DB | 21W1 | DBMV21H1PYK87 | DBMZ21H1PYK87 | DBMN21H1PYK87 |
| DC | 8W8 | DCMV8H8PYK87 | DCMZ8H8PYK87 | DCMN8H8PYK87 |
| DC | 13W6 | DCMV13H6PYK87 | DCMZ13H6PYK87 | DCMN13H6PYK87 |
| DC | 17W5 | DCMV17H5PYK87 | DCMZ17H5PYK87 | DCMN17H5PYK87 |
| DC | 21WA4 | DCMV21HA4PYK87 | DCMZ21HA4PYK87 | DCMN21HA4PYK87 |
| DC | 25W3 | DCMV25H3PYK87 | DCMZ25H3PYK87 | DCMN25H3PYK87 |
| DC | 27W2 | DCMV27H2PYK87 | DCMZ27H2PYK87 | DCMN27H2PYK87 |

For M3 threads replace MV with MT, MZ with MQ, MN with MU.
Notes: For tin plated PC tails add A226 (signal contacts only). Example: DEMV5H1PYK87A226
For performance class 2 substitute K127 for K87. Example: DEMV5H1PYK127
For DD shell sizes, see page 72.
♣ Keyed.

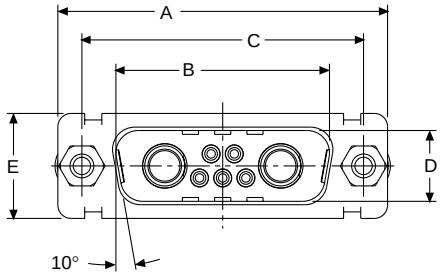


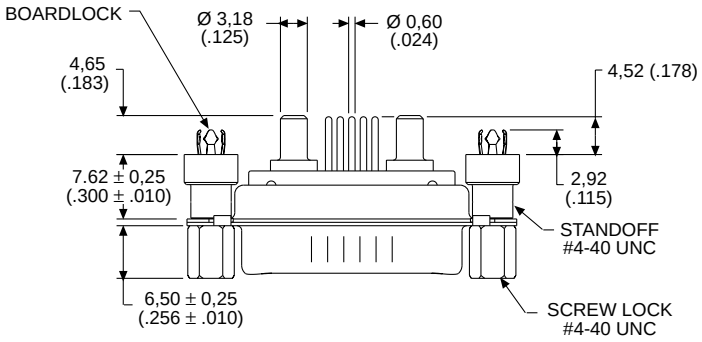


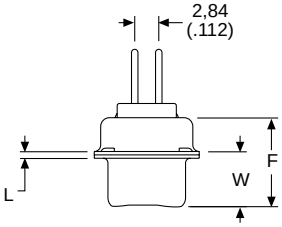


Screw lock, boardlock, and high power contact removed for clarity

Dimensions

| Shell Size | A ±0,38 (.015) | B ±0,13 (.005) | C ±0,13 (.005) | D ±0,13 (.005) | E ±0,38 (.015) | F ±0,25 (.010) | W ±0,368 (.0145) | W ±0,41 (.016) | L ±0,25 (.010) |
|---|---|---|---|---|---|---|---|---|---|
| DE | 30,81 (1.213) | 16,92 (.666) | 24,99 (.984) | 8,36 (.329) | 12,55 (.494) | 10,72 (.422) | 6,693 (.2635) | — | 0,76 (.030) |
| DA | 39,14 (1.541) | 25,25 (.994) | 33,32 (1.312) | 8,36 (.329) | 12,55 (.494) | 10,72 (.422) | 6,693 (.2635) | — | 0,76 (.030) |
| DB | 53,04 (2.088) | 38,96 (1.534) | 47,04 (1.852) | 8,36 (.329) | 12,55 (.494) | 10,82 (.426) | — | 6,84 (.269) | 0,99 (.039) |
| DC | 69,32 (2.729) | 55,42 (2.182) | 63,50 (2.500) | 8,36 (.329) | 12,55 (.494) | 10,82 (.426) | — | 6,84 (.269) | 0,99 (.039) |


Dimensions are shown in mm (inch)
Dimensions subject to change

## 40 A High Power Straight — European PC Tails (Sizes DE-DC)

Receptacle

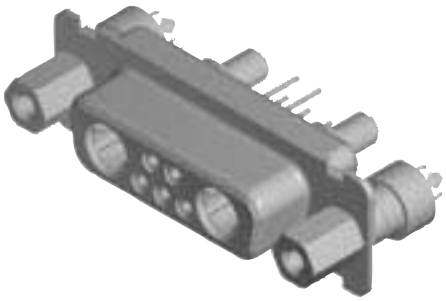

Reader's Resource
For contact cavity arrangements, see page 223.
For P.C. hole patterns, see pages 257-258.
For panel cutouts, see page 221.

Part Numbers with Standoff #4-40 UNC

| Shell Size | Layout | Part Number Without Screw Locks Without Boardlocks | Part Number Without Screw Locks With Boardlocks | Part Number With Screw Locks With Boardlocks |
|---|---|---|---|---|
| DE | 5W1 | DEMV5H1SYA197 | DEMZ5H1SYA197 | DEMN5H1SYA197 |
| DA | 7W2 | DAMV7H2SYA197 | DAMZ7H2SYA197 | DAMN7H2SYA197 |
| DA | 11W1 | DAMV11H1SYA197 | DAMZ11H1SYA197 | DAMN11H1SYA197 |
| DA | 3W3 | DAMV3H3SYA197 | DAMZ3H3SYA197 | DAMN3H3SYA197 |
| DA | 3WK3♣ | DAMV3HK3SYA197TM | DAMZ3HK3SYA197TM | DAMN3HK3SYA197TM |
| DB | 5W5 | DBMV5H5SYA197 | DBMZ5H5SYA197 | DBMN5H5SYA197 |
| DB | 9W4 | DBMV9H4SYA197 | DBMZ9H4SYA197 | DBMN9H4SYA197 |
| DB | 13W3 | DBMV13H3SYA197 | DBMZ13H3SYA197 | DBMN13H3SYA197 |
| DB | 17W2 | DBMV17H2SYA197 | DBMZ17H2SYA197 | DBMN17H2SYA197 |
| DB | 21W1 | DBMV21H1SYA197 | DBMZ21H1SYA197 | DBMN21H1SYA197 |
| DC | 8W8 | DCMV8H8SYA197 | DCMZ8H8SYA197 | DCMN8H8SYA197 |
| DC | 13W6 | DCMV13H6SYA197 | DCMZ13H6SYA197 | DCMN13H6SYA197 |
| DC | 17W5 | DCMV17H5SYA197 | DCMZ17H5SYA197 | DCMN17H5SYA197 |
| DC | 21WA4 | DCMV21HA4SYA197 | DCMZ21HA4SYA197 | DCMN21HA4SYA197 |
| DC | 25W3 | DCMV25H3SYA197 | DCMZ25H3SYA197 | DCMN25H3SYA197 |
| DC | 27W2 | DCMV27H2SYA197 | DCMZ27H2SYA197 | DCMN27H2SYA197 |

For M3 threads replace MV with MT, MZ with MQ, MN with MU.
Notes: For performance class 2 substitute K126 for A197. Example: DEMV5H1SYK126
For DD shell sizes, see page 73.
♣ Keyed.

Engaging Face

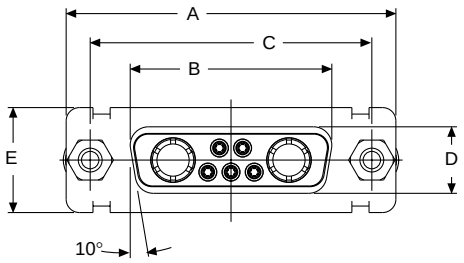


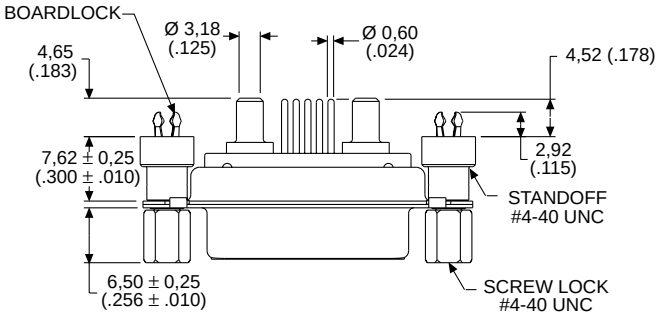


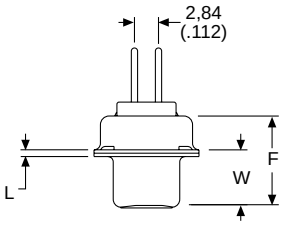


Screw lock, boardlock, and high power contact removed for clarity

Dimensions

| Shell Size | A ±0,38 (.015) | B ±0,13 (.005) | C ±0,13 (.005) | D ±0,13 (.005) | E ±0,38 (.015) | F ±0,25 (.010) | W ±0,38 (.015) | L ±0,25 (.010) |
|---|---|---|---|---|---|---|---|---|
| DE | 30,81 (1.213) | 16,33 (.643) | 24,99 (.984) | 7,90 (.311) | 12,55 (.494) | 10,90 (.429) | 6,94 (.273) | 0,76 (.030) |
| DA | 39,14 (1.541) | 24,66 (.971) | 33,32 (1.312) | 7,90 (.311) | 12,55 (.494) | 10,90 (.429) | 6,94 (.273) | 0,76 (.030) |
| DB | 53,04 (2.088) | 38,38 (1.511) | 47,04 (1.852) | 7,90 (.311) | 12,55 (.494) | 10,90 (.429) | 6,94 (.273) | 0,76 (.030) |
| DC | 69,32 (2.729) | 54,84 (2.159) | 63,50 (2.500) | 7,90 (.311) | 12,55 (.494) | 10,90 (.429) | 6,94 (.273) | 0,76 (.030) |

## 40 A High Power Straight — European PC Tails (Size DD)

Plug

Part Numbers with Standoff #4-40 UNC

| Shell Size | Layout | Part Number Without Screw Locks Without Boardlocks | Part Number Without Screw Locks With Boardlocks | Part Number With Screw Locks With Boardlocks |
|---|---|---|---|---|
| DD | 24W7 | DDMV24H7PYK87 | DDMZ24H7PYK87 | DDMN24H7PYK87 |
| DD | 36W4 | DDMV36H4PYK87 | DDMZ36H4PYK87 | DDMN36H4PYK87 |
| DD | 43W2 | DDMV43H2PYK87 | DDMZ43H2PYK87 | DDMN43H2PYK87 |
| DD | 47W1 | DDMV47H1PYK87 | DDMZ47H1PYK87 | DDMN47H1PYK87 |

For M3 threads replace MV with MT, MZ with MQ, MN with MU.
Notes: For tin plated PC tails add A226 (signal contacts only). Example DDMV24H7PYK87A226
For performance class 2 substitute K127 for K87. Example: DDMV24H7PYK127

Reader's Resource
For contact cavity arrangements, see page 222.
For P.C. hole patterns, see page 256.
For panel cutouts, see page 221.

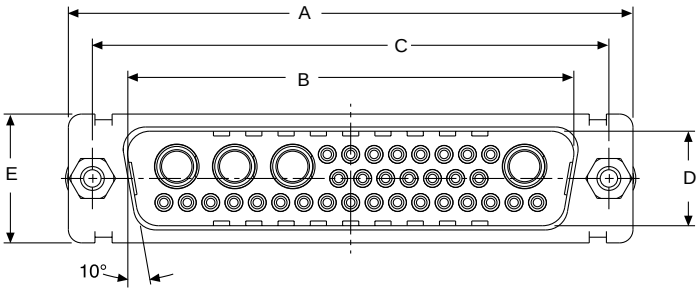


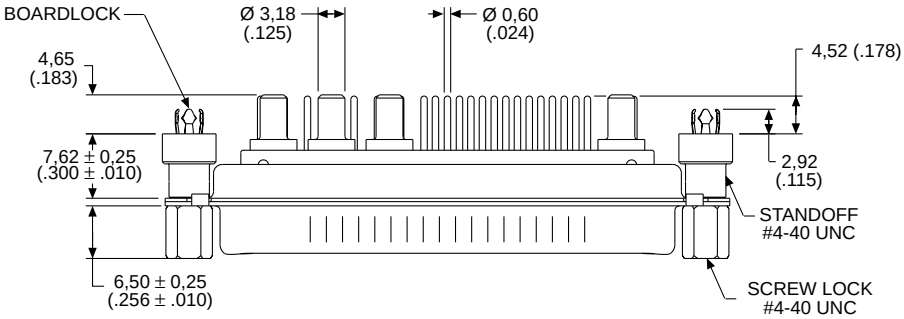


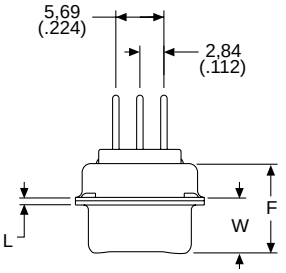


Screw lock, boardlock, and high power contact removed for clarity

Dimensions

| Shell Size | A ±0,38 (.015) | B ±0,13 (.005) | C ±0,13 (.005) | D ±0,13 (.005) | E ±0,38 (.015) | F ±0,25 (.010) | W ±0,41 (.016) | L ±0,25 (.010) |
|---|---|---|---|---|---|---|---|---|
| DD | 66,93 (2.635) | 52,81 (2.079) | 61,11 (2.406) | 11,07 (.436) | 15,37 (.605) | 10,82 (.426) | 6,84 (.269) | 0,99 (.039) |



Dimensions are shown in mm (inch)
Dimensions subject to change

## 40 A High Power Straight — European PC Tails (Size DD)

Receptacle

Part Numbers with Standoff #4-40 UNC

| Shell Size | Layout | Part Number Without Screw Locks Without Boardlocks | Part Number Without Screw Locks With Boardlocks | Part Number With Screw Locks With Boardlocks |
|---|---|---|---|---|
| DD | 24W7 | DDMV24H7SYA197 | DDMZ24H7SYA197 | DDMN24H7SYA197 |
| DD | 36W4 | DDMV36H4SYA197 | DDMZ36H4SYA197 | DDMN36H4SYA197 |
| DD | 43W2 | DDMV43H2SYA197 | DDMZ43H2SYA197 | DDMN43H2SYA197 |
| DD | 47W1 | DDMV47H1SYA197 | DDMZ47H1SYA197 | DDMN47H1SYA197 |

For M3 threads replace MV with MT, MZ with MQ, MN with MU.
Note: For performance class 2 substitute K126 for A197. Example: DDMV24H7SYK126

Reader's Resource
For contact cavity arrangements, see page 223.
For P.C. hole patterns, see page 259.
For panel cutouts, see page 221.

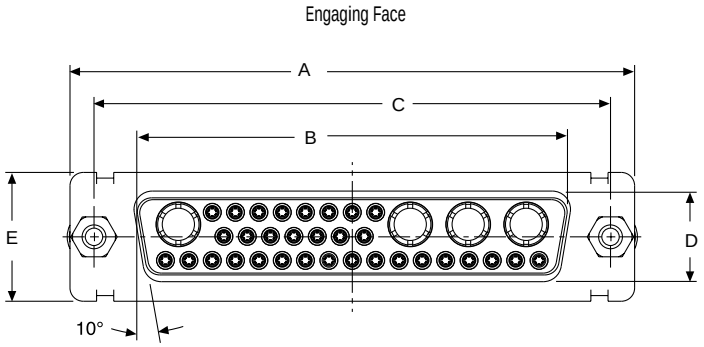


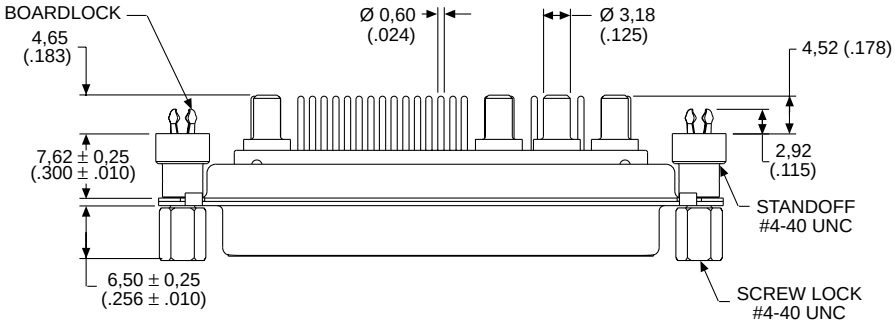


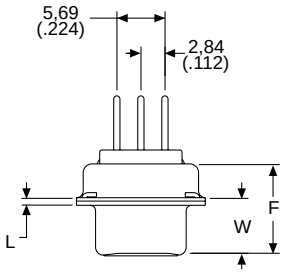


Screw lock, boardlock, and high power contact removed for clarity

Dimensions

| Shell Size | A ±0,38 (.015) | B ±0,13 (.005) | C ±0,13 (.005) | D ±0,13 (.005) | E ±0,38 (.015) | F ±0,25 (.010) | W ±0,38 (.015) | L ±0,25 (.010) |
|---|---|---|---|---|---|---|---|---|
| DD | 66,93 (2.635) | 52,42 (2.064) | 61,11 (2.406) | 10,74 (.423) | 15,37 (.605) | 10,90 (.429) | 6,94 (.273) | 0,76 (.030) |

## 90° PC Tail — European Footprint 10,2♦ or 9,4 mm♦♦ (Sizes DE-DD)

Plug

Reader's Resource
For contact cavity arrangements, see page 222.
For P.C. hole patterns, see pages 260-262.
For panel cutouts, see page 221.
For hardware views (European), see page 227.

Part Numbers

| Shell Size | Layout | Part Number Without Hardware | Part Number Metal Bracket With #4-40 Nut |
|---|---|---|---|
| DE | 5W1 | DEM-5W1P-1A0N-K87 | DEM-5W1P-1A7N-K87 |
| DA | 7W2 | DAM-7W2P-1A0N-K87 | DAM-7W2P-1A7N-K87 |
| DA | 11W1 | DAM-11W1P-1A0N-K87 | DAM-11W1P-1A7N-K87 |
| DA | 3W3 | DAM-3W3P-1A0N-K87 | DAM-3W3P-1A7N-K87 |
| DA | 3WK3♣ | DAM-3WK3P-1A0N-K87 | DAM-3WK3P-1A7N-K87 |
| DB | 5W5 | DBM-5W5P-1A0N-K87 | DBM-5W5P-1A7N-K87 |
| DB | 9W4 | DBM-9W4P-1A0N-K87 | DBM-9W4P-1A7N-K87 |
| DB | 13W3 | DBM-13W3P-1A0N-K87 | DBM-13W3P-1A7N-K87 |
| DB | 17W2 | DBM-17W2P-1A0N-K87 | DBM-17W2P-1A7N-K87 |
| DB | 21W1 | DBM-21W1P-1A0N-K87 | DBM-21W1P-1A7N-K87 |
| DC | 8W8 | DCM-8W8P-1A0N-K87 | DCM-8W8P-1A7N-K87 |
| DC | 13W6 | DCM-13W6P-1A0N-K87 | DCM-13W6P-1A7N-K87 |
| DC | 17W5 | DCM-17W5P-1A0N-K87 | DCM-17W5P-1A7N-K87 |
| DC | 21WA4 | DCM-21WA4P-1A0N-K87 | DCM-21WA4P-1A7N-K87 |
| DC | 25W3 | DCM-25W3P-1A0N-K87 | DCM-25W3P-1A7N-K87 |
| DC | 27W2 | DCM-27W2P-1A0N-K87 | DCM-27W2P-1A7N-K87 |
| DD | 24W7 | DDM-24W7P-1A0N-K87 | DDM-24W7P-1A7N-K87 |
| DD | 36W4 | DDM-36W4P-1A0N-K87 | DDM-36W4P-1A7N-K87 |
| DD | 43W2 | DDM-43W2P-1A0N-K87 | DDM-43W2P-1A7N-K87 |
| DD | 47W1 | DDM-47W1P-1A0N-K87 | DDM-47W1P-1A7N-K87 |

Note: Performance class 3 standard, for performance class 2 add -A191. Example: DEM-5W1P-1A0N-A191-K87
♣ Keyed.

Engaging Face

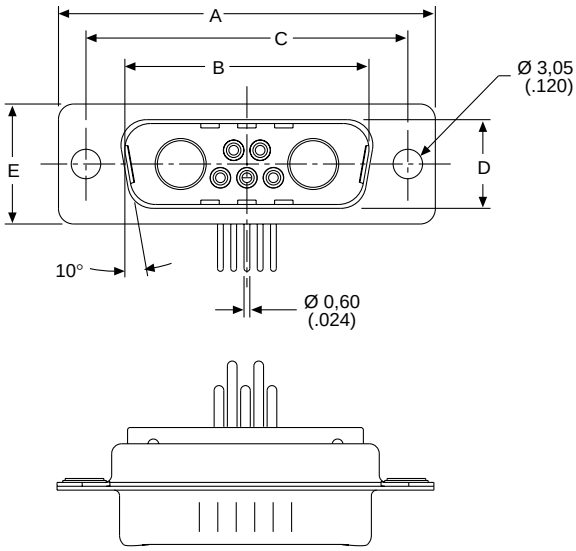


DD Configuration

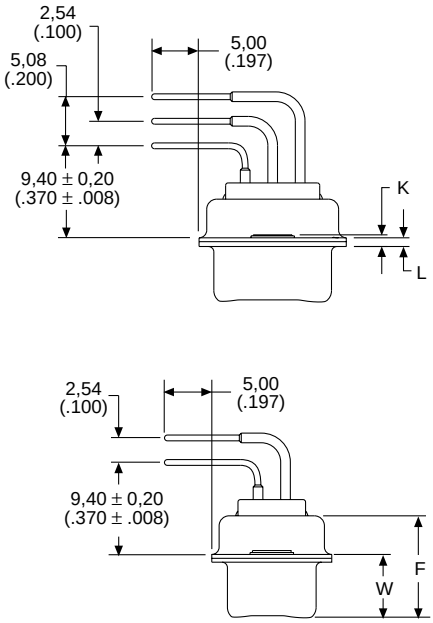


Dimensions

| Shell Size | A ±0,38 (.015) | B ±0,13 (.005) | C ±0,13 (.005) | D ±0,13 (.005) | E ±0,38 (.015) | F ±0,25 (.010) | W ±0,368 (.0145) | W ±0,41 (.016) | K ±0,317 (.0125) | K ±0,25 (.010) | L ±0,25 (.010) |
|---|---|---|---|---|---|---|---|---|---|---|---|
| DE | 30,81 (1.213) | 16,92 (.666) | 24,99 (.984) | 8,36 (.329) | 12,55 (.494) | 10,72 (.422) | 6,693 (.2635) | — | 1,206 (.0475) | — | 0,76 (.030) |
| DA | 39,14 (1.541) | 25,25 (.994) | 33,32 (1.312) | 8,36 (.329) | 12,55 (.494) | 10,72 (.422) | 6,693 (.2635) | — | 1,206 (.0475) | — | 0,76 (.030) |
| DB | 53,04 (2.088) | 38,96 (1.534) | 47,04 (1.852) | 8,36 (.329) | 12,55 (.494) | 10,82 (.426) | — | 6,84 (.269) | — | 1,52 (.060) | 0,99 (.039) |
| DC | 69,32 (2.729) | 55,42 (2.182) | 63,50 (2.500) | 8,36 (.329) | 12,55 (.494) | 10,82 (.426) | — | 6,84 (.269) | — | 1,52 (.060) | 0,99 (.039) |
| DD | 66,93 (2.635) | 52,81 (2.079) | 61,11 (2.406) | 11,07 (.436) | 15,37 (.605) | 10,82 (.426) | — | 6,84 (.269) | — | 1,52 (.060) | 0,99 (.039) |

♦ Connector footprint measured from the front shell.
♦♦ Connector footprint measured from the rear shell.



Dimensions are shown in mm (inch)
Dimensions subject to change

## 90° PC Tail — European Footprint 10,2♦ or 9,4 mm♦♦ (Sizes DE-DD)

Receptacle

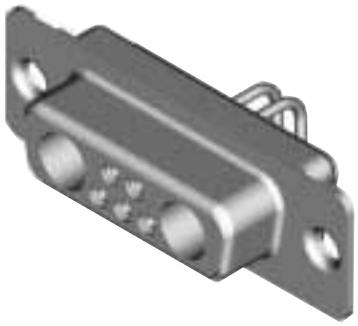

Reader's Resource
For contact cavity arrangements, see page 223.
For P.C. hole patterns, see pages 263-265.
For panel cutouts, see page 221.
For hardware views (European), see page 227.

Part Numbers

| Shell Size | Layout | Part Number Without Hardware | Part Number Metal Bracket With #4-40 Nut |
|---|---|---|---|
| DE | 5W1 | DEM-5W1S-1A0N-A197 | DEM-5W1S-1A7N-A197 |
| DA | 7W2 | DAM-7W2S-1A0N-A197 | DAM-7W2S-1A7N-A197 |
| DA | 11W1 | DAM-11W1S-1A0N-A197 | DAM-11W1S-1A7N-A197 |
| DA | 3W3 | DAM-3W3S-1A0N-A197 | DAM-3W3S-1A7N-A197 |
| DA | 3WK3♣ | DAM-3WK3S-1A0N-A197 | DAM-3WK3S-1A7N-A197 |
| DB | 5W5 | DBM-5W5S-1A0N-A197 | DBM-5W5S-1A7N-A197 |
| DB | 9W4 | DBM-9W4S-1A0N-A197 | DBM-9W4S-1A7N-A197 |
| DB | 13W3 | DBM-13W3S-1A0N-A197 | DBM-13W3S-1A7N-A197 |
| DB | 17W2 | DBM-17W2S-1A0N-A197 | DBM-17W2S-1A7N-A197 |
| DB | 21W1 | DBM-21W1S-1A0N-A197 | DBM-21W1S-1A7N-A197 |
| DC | 8W8 | DCM-8W8S-1A0N-A197 | DCM-8W8S-1A7N-A197 |
| DC | 13W6 | DCM-13W6S-1A0N-A197 | DCM-13W6S-1A7N-A197 |
| DC | 17W5 | DCM-17W5S-1A0N-A197 | DCM-17W5S-1A7N-A197 |
| DC | 21WA4 | DCM-21WA4S-1A0N-A197 | DCM-21WA4S-1A7N-A197 |
| DC | 25W3 | DCM-25W3S-1A0N-A197 | DCM-25W3S-1A7N-A197 |
| DC | 27W2 | DCM-27W2S-1A0N-A197 | DCM-27W2S-1A7N-A197 |
| DD | 24W7 | DDM-24W7S-1A0N-A197 | DDM-24W7S-1A7N-A197 |
| DD | 36W4 | DDM-36W4S-1A0N-A197 | DDM-36W4S-1A7N-A197 |
| DD | 43W2 | DDM-43W2S-1A0N-A197 | DDM-43W2S-1A7N-A197 |
| DD | 47W1 | DDM-47W1S-1A0N-A197 | DDM-47W1S-1A7N-A197 |

Note: Performance class 3 standard, for performance class 2 add -A191. Example: DEM-5W1S-1A0N-A191-A197
♣ Keyed.

Engaging Face

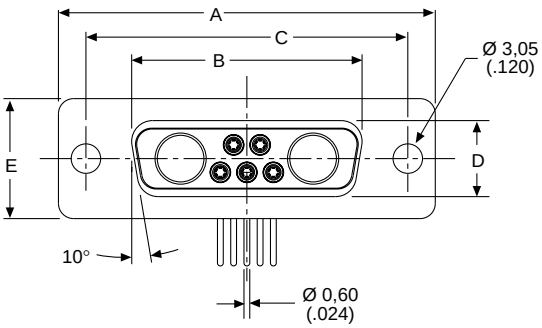


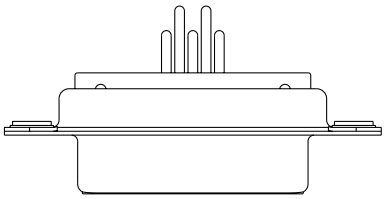

DD Configuration

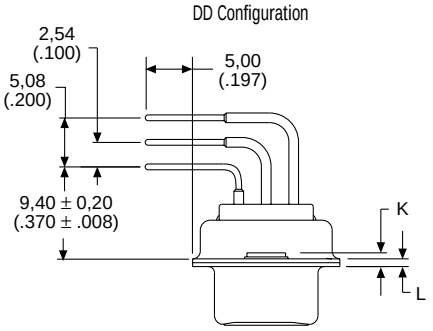


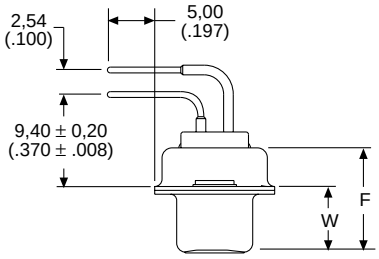


Dimensions

| Shell Size | A ±0,38 (.015) | B ±0,13 (.005) | C ±0,13 (.005) | D ±0,13 (.005) | E ±0,38 (.015) | F ±0,25 (.010) | W ±0,38 (.015) | K ±0,318 (.0125) | L ±0,25 (.010) |
|---|---|---|---|---|---|---|---|---|---|
| DE | 30,81 (1.213) | 16,33 (.643) | 24,99 (.984) | 7,90 (.311) | 12,55 (.494) | 10,90 (.429) | 6,94 (.273) | 1,206 (.0475) | 0,76 (.030) |
| DA | 39,14 (1.541) | 24,66 (.971) | 33,32 (1.312) | 7,90 (.311) | 12,55 (.494) | 10,90 (.429) | 6,94 (.273) | 1,206 (.0475) | 0,76 (.030) |
| DB | 53,04 (2.088) | 38,38 (1.511) | 47,04 (1.852) | 7,90 (.311) | 12,55 (.494) | 10,90 (.429) | 6,94 (.273) | 1,206 (.0475) | 0,76 (.030) |
| DC | 69,32 (2.729) | 54,84 (2.159) | 63,50 (2.500) | 7,90 (.311) | 12,55 (.494) | 10,90 (.429) | 6,94 (.273) | 1,206 (.0475) | 0,76 (.030) |
| DD | 66,93 (2.635) | 52,42 (2.064) | 61,11 (2.406) | 10,74 (.423) | 15,37 (.605) | 10,90 (.429) | 6,94 (.273) | 1,206 (.0475) | 0,76 (.030) |

♦ Connector footprint measured from the front shell.
♦ ♦ Connector footprint measured from the rear shell.

## Straight PC Tails — European (Sizes DE-DD)

Plug

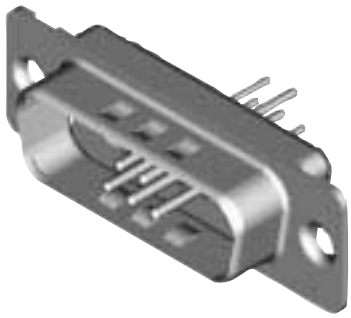

Reader's Resource
For contact cavity arrangements, see page 222.
For P.C. hole patterns, see pages 266-268.
For panel cutouts, see page 221.
For hardware views (European), see page 227.

Part Numbers

| Shell Size | Layout | Part Number X 4,60 (.181) | Part Number X 6,05 (.238) |
|---|---|---|---|
| DE | 5W1 | DEM-5W1P-OL2-K87 | DEM-5W1P-OL4-K87 |
| DA | 7W2 | DAM-7W2P-OL2-K87 | DAM-7W2P-OL4-K87 |
| DA | 11W1 | DAM-11W1P-OL2-K87 | DAM-11W1P-OL4-K87 |
| DA | 3W3 | DAM-3W3P-OL2-K87 | DAM-3W3P-OL4-K87 |
| DA | 3WK3♣ | DAM-3WK3P-OL2-K87 | DAM-3WK3P-OL4-K87 |
| DB | 5W5 | DBM-5W5P-OL2-K87 | DBM-5W5P-OL4-K87 |
| DB | 9W4 | DBM-9W4P-OL2-K87 | DBM-9W4P-OL4-K87 |
| DB | 13W3 | DBM-13W3P-OL2-K87 | DBM-13W3P-OL4-K87 |
| DB | 17W2 | DBM-17W2P-OL2-K87 | DBM-17W2P-OL4-K87 |
| DB | 21W1 | DBM-21W1P-OL2-K87 | DBM-21W1P-OL4-K87 |
| DC | 8W8 | DCM-8W8P-OL2-K87 | DCM-8W8P-OL4-K87 |
| DC | 13W6 | DCM-13W6P-OL2-K87 | DCM-13W6P-OL4-K87 |
| DC | 17W5 | DCM-17W5P-OL2-K87 | DCM-17W5P-OL4-K87 |
| DC | 21WA4 | DCM-21WA4P-OL2-K87 | DCM-21WA4P-OL4-K87 |
| DC | 25W3 | DCM-25W3P-OL2-K87 | DCM-25W3P-OL4-K87 |
| DC | 27W2 | DCM-27W2P-OL2-K87 | DCM-27W2P-OL4-K87 |
| DD | 24W7 | DDM-24W7P-OL2-K87 | DDM-24W7P-OL4-K87 |
| DD | 36W4 | DDM-36W4P-OL2-K87 | DDM-36W4P-OL4-K87 |
| DD | 43W2 | DDM-43W2P-OL2-K87 | DDM-43W2P-OL4-K87 |
| DD | 47W1 | DDM-47W1P-OL2-K87 | DDM-47W1P-OL4-K87 |

Note: Performance class 3 standard, for performance class 2 add -A191. Example: DEM-5W1P-OL2-A191-K87
♣ Keyed.

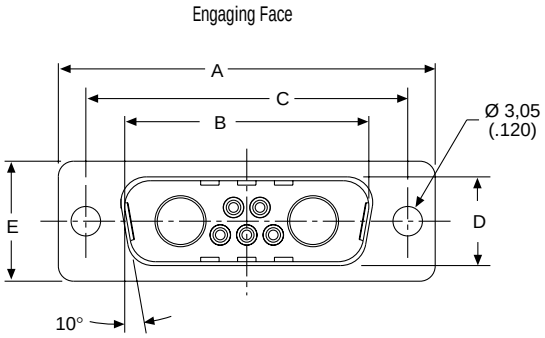


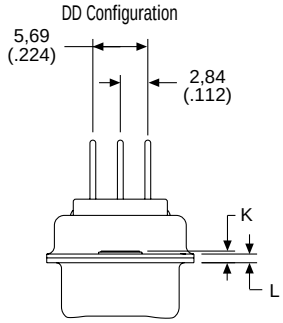


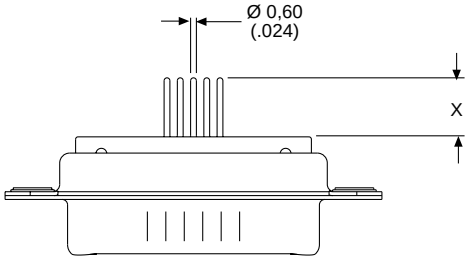


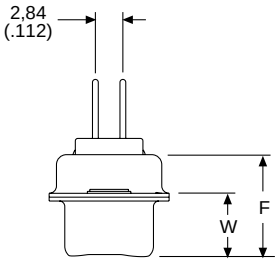


Dimensions

| Shell Size | A ±0,38 (.015) | B ±0,13 (.005) | C ±0,13 (.005) | D ±0,13 (.005) | E ±0,38 (.015) | F ±0,25 (.010) | W ±0,368 (.0145) | W ±0,41 (.016) | K ±0,317 (.0125) | K ±0,25 (.010) | L ±0,25 (.010) |
|---|---|---|---|---|---|---|---|---|---|---|---|
| DE | 30,81 (1.213) | 16,92 (.666) | 24,99 (.984) | 8,36 (.329) | 12,55 (.494) | 10,72 (.422) | 6,693 (.2635) | — | 1,206 (.0475) | — | 0,76 (.030) |
| DA | 39,14 (1.541) | 25,25 (.994) | 33,32 (1.312) | 8,36 (.329) | 12,55 (.494) | 10,72 (.422) | 6,693 (.2635) | — | 1,206 (.0475) | — | 0,76 (.030) |
| DB | 53,04 (2.088) | 38,96 (1.534) | 47,04 (1.852) | 8,36 (.329) | 12,55 (.494) | 10,82 (.426) | — | 6,84 (.269) | — | 1,52 (.060) | 0,99 (.039) |
| DC | 69,32 (2.729) | 55,42 (2.182) | 63,50 (2.500) | 8,36 (.329) | 12,55 (.494) | 10,82 (.426) | — | 6,84 (.269) | — | 1,52 (.060) | 0,99 (.039) |
| DD | 66,93 (2.635) | 52,81 (2.079) | 61,11 (2.406) | 11,07 (.436) | 15,37 (.605) | 10,82 (.426) | — | 6,84 (.269) | — | 1,52 (.060) | 0,99 (.039) |



Dimensions are shown in mm (inch)
Dimensions subject to change

## Straight PC Tails — European (Sizes DE-DD)

Receptacle

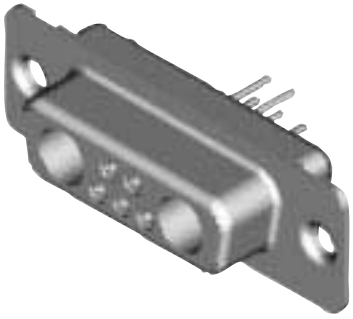

Reader's Resource

For contact cavity arrangements, see page 223.
For P.C. hole patterns, see pages 269-271.
For panel cutouts, see page 221.
For hardware views (European), see page 227.

Part Numbers

| Shell Size | Layout | Part Number X 4.60 (.181) | Part Number X 6.05 (.238) |
|---|---|---|---|
| DE | 5W1 | DEM-5W1S-OL2-A197 | DEM-5W1S-OL4-A197 |
| DA | 7W2 | DAM-7W2S-OL2-A197 | DAM-7W2S-OL4-A197 |
| DA | 11W1 | DAM-11W1S-OL2-A197 | DAM-11W1S-OL4-A197 |
| DA | 3W3 | DAM-3W3S-OL2-A197 | DAM-3W3S-OL4-A197 |
| DA | 3WK3♣ | DAM-3WK3S-OL2-A197 | DAM-3WK3S-OL4-A197 |
| DB | 5W5 | DBM-5W5S-OL2-A197 | DBM-5W5S-OL4-A197 |
| DB | 9W4 | DBM-9W4S-OL2-A197 | DBM-9W4S-OL4-A197 |
| DB | 13W3 | DBM-13W3S-OL2-A197 | DBM-13W3S-OL4-A197 |
| DB | 17W2 | DBM-17W2S-OL2-A197 | DBM-17W2S-OL4-A197 |
| DB | 21W1 | DBM-21W1S-OL2-A197 | DBM-21W1S-OL4-A197 |
| DC | 8W8 | DCM-8W8S-OL2-A197 | DCM-8W8S-OL4-A197 |
| DC | 13W6 | DCM-13W6S-OL2-A197 | DCM-13W6S-OL4-A197 |
| DC | 17W5 | DCM-17W5S-OL2-A197 | DCM-17W5S-OL4-A197 |
| DC | 21WA4 | DCM-21WA4S-OL2-A197 | DCM-21WA4S-OL4-A197 |
| DC | 25W3 | DCM-25W3S-OL2-A197 | DCM-25W3S-OL4-A197 |
| DC | 27W2 | DCM-27W2S-OL2-A197 | DCM-27W2S-OL4-A197 |
| DD | 24W7 | DDM-24W7S-OL2-A197 | DDM-24W7S-OL4-A197 |
| DD | 36W4 | DDM-36W4S-OL2-A197 | DDM-36W4S-OL4-A197 |
| DD | 43W2 | DDM-43W2S-OL2-A197 | DDM-43W2S-OL4-A197 |
| DD | 47W1 | DDM-47W1S-OL2-A197 | DDM-47W1S-OL4-A197 |

Note: Performance class 3 standard, for performance class 2 add -A191. Example: DEM-5W1S-OL2-A191-A197
♣ Keyed.

Engaging Face

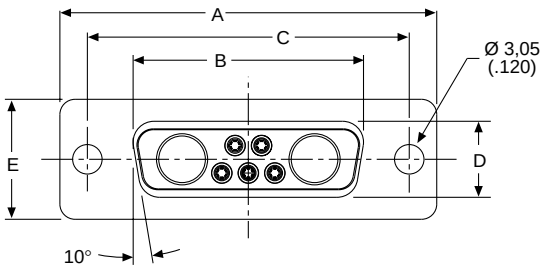


DD Configuration

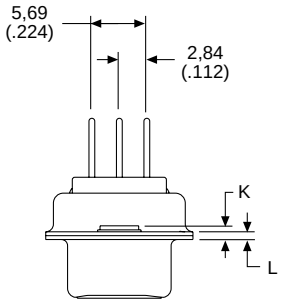


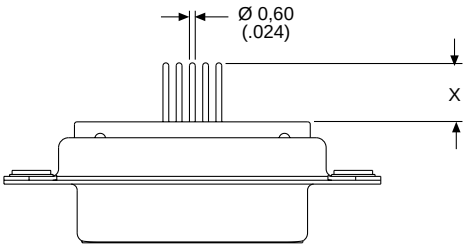


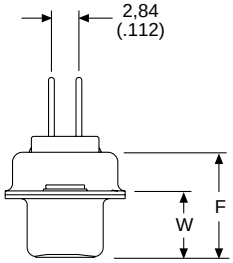


Dimensions

| Shell Size | A ±0,38 (.015) | B ±0,13 (.005) | C ±0,13 (.005) | D ±0,13 (.005) | E ±0,38 (.015) | F ±0,25 (.010) | W ±0,38 (.015) | K ±0,318 (.0125) | L ±0,25 (.010) |
|---|---|---|---|---|---|---|---|---|---|
| DE | 30,81 (1.213) | 16,33 (.643) | 24,99 (.984) | 7,90 (.311) | 12,55 (.494) | 10,90 (.429) | 6,94 (.273) | 1,206 (.0475) | 0,76 (.030) |
| DA | 39,14 (1.541) | 24,66 (.971) | 33,32 (1.312) | 7,90 (.311) | 12,55 (.494) | 10,90 (.429) | 6,94 (.273) | 1,206 (.0475) | 0,76 (.030) |
| DB | 53,04 (2.088) | 38,38 (1.511) | 47,04 (1.852) | 7,90 (.311) | 12,55 (.494) | 10,90 (.429) | 6,94 (.273) | 1,206 (.0475) | 0,76 (.030) |
| DC | 69,32 (2.729) | 54,84 (2.159) | 63,50 (2.500) | 7,90 (.311) | 12,55 (.494) | 10,90 (.429) | 6,94 (.273) | 1,206 (.0475) | 0,76 (.030) |
| DD | 66,93 (2.635) | 52,42 (2.064) | 61,11 (2.406) | 10,74 (.423) | 15,37 (.605) | 10,90 (.429) | 6,94 (.273) | 1,206 (.0475) | 0,76 (.030) |

## Solder Cup (Sizes DE-DD)

Plug

Reader's Resource

For contact cavity arrangements, see page 222.
For panel cutouts, see page 221.
For hardware views (Standard), see page 226.

Part Numbers

| Shell Size | Layout | Through Hole | Dual Float Mount | Clinch Nut #4-40 UNC |
|---|---|---|---|---|
| DE | 5W1 | DEM5W1PK87 | DEMY5W1PK87 | DEME5W1PK87 |
| DA | 7W2 | DAM7W2PK87 | DAMY7W2PK87 | DAME7W2PK87 |
| DA | 11W1 | DAM11W1PK87 | DAMY11W1PK87 | DAME11W1PK87 |
| DA | 3W3 | DAM3W3PK87 | DAMY3W3PK87 | DAME3W3PK87 |
| DA | 3WK3♣ | DAM3WK3PK87 | DAMY3WK3PK87 | DAME3WK3PK87 |
| DB | 5W5 | DBMP5W5PK87 | DBMY5W5PK87 | DBME5W5PK87 |
| DB | 9W4 | DBM9W4PK87 | DBMY9W4PK87 | DBME9W4PK87 |
| DB | 13W3 | DBM13W3PK87 | DBMY13W3PK87 | DBME13W3PK87 |
| DB | 17W2 | DBM17W2PK87 | DBMY17W2PK87 | DBME17W2PK87 |
| DB | 21W1 | DBM21W1PK87 | DBMY21W1PK87 | DBME21W1PK87 |
| DC | 8W8 | DCM8W8PK87 | DCMY8W8PK87 | DCME8W8PK87 |
| DC | 13W6 | DCM13W6PK87 | DCMY13W6PK87 | DCME13W6PK87 |
| DC | 17W5 | DCM17W5PK87 | DCMY17W5PK87 | DCME17W5PK87 |
| DC | 21WA4 | DCM21WA4PK87 | DCMY21WA4PK87 | DCME21WA4PK87 |
| DC | 25W3 | DCM25W3PK87 | DCMY25W3PK87 | DCME25W3PK87 |
| DC | 27W2 | DCM27W2PK87 | DCMY27W2PK87 | DCME27W2PK87 |
| DD | 24W7 | DDM24W7PK87 | DDMY24W7PK87 | DDME24W7PK87 |
| DD | 36W4 | DDM36W4PK87 | DDMY36W4PK87 | DDME36W4PK87 |
| DD | 43W2 | DDM43W2PK87 | DDMY43W2PK87 | DDME43W2PK87 |
| DD | 47W1 | DDM47W1PK87 | DDMY47W1PK87 | DDME47W1PK87 |

For contacts with 30 microinches gold substitute K127 for K87. Example: DEM5W1PK127
For M3 clinch nuts substitute X for E. Example: DEMX5W1PK87
♣ Keyed.

Engaging Face

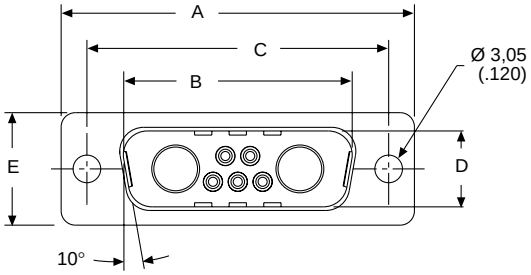


DD Configuration

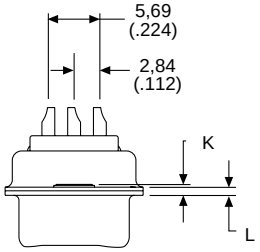


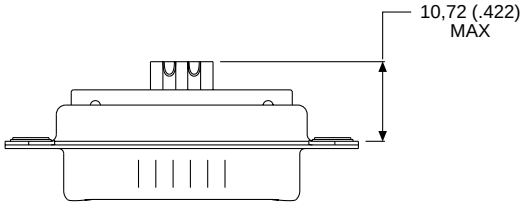


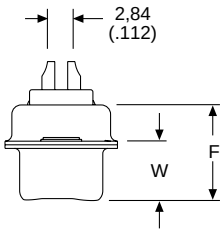


Dimensions

| Shell Size | A ±0,38 (.015) | B ±0,13 (.005) | C ±0,13 (.005) | D ±0,13 (.005) | E ±0,38 (.015) | F ±0,25 (.010) | W ±0,368 (.0145) | W ±0,41 (.016) | K ±0,317 (.0125) | K ±0,25 (.010) | L ±0,25 (.010) |
|---|---|---|---|---|---|---|---|---|---|---|---|
| DE | 30,81 (1.213) | 16,92 (.666) | 24,99 (.984) | 8,36 (.329) | 12,55 (.494) | 10,72 (.422) | 6,693 (.2635) | — | 1,206 (.0475) | — | 0,76 (.030) |
| DA | 39,14 (1.541) | 25,25 (.994) | 33,32 (1.312) | 8,36 (.329) | 12,55 (.494) | 10,72 (.422) | 6,693 (.2635) | — | 1,206 (.0475) | — | 0,76 (.030) |
| DB | 53,04 (2.088) | 38,96 (1.534) | 47,04 (1.852) | 8,36 (.329) | 12,55 (.494) | 10,82 (.426) | — | 6,84 (.269) | — | 1,52 (.060) | 0,99 (.039) |
| DC | 69,32 (2.729) | 55,42 (2.182) | 63,50 (2.500) | 8,36 (.329) | 12,55 (.494) | 10,82 (.426) | — | 6,84 (.269) | — | 1,52 (.060) | 0,99 (.039) |
| DD | 66,93 (2.635) | 52,81 (2.079) | 61,11 (2.406) | 11,07 (.436) | 15,37 (.605) | 10,82 (.426) | — | 6,84 (.269) | — | 1,52 (.060) | 0,99 (.039) |



Dimensions are shown in mm (inch)
Dimensions subject to change

## Solder Cup (Sizes DE-DD)

Receptacle

Reader's Resource

For contact cavity arrangements, see page 223.
For panel cutouts, see page 221.
For hardware views (Standard), see page 226.

Part Numbers

| Shell Size | Layout | Through Hole | Dual Float Mount | Clinch Nut #4-40 UNC |
|---|---|---|---|---|
| DE | 5W1 | DEM5W1SA197 | DEMY5W1SA197 | DEME5W1SA197 |
| DA | 7W2 | DAM7W2SA197 | DAMY7W2SA197 | DAME7W2SA197 |
| DA | 11W1 | DAM11W1SA197 | DAMY11W1SA197 | DAME11W1SA197 |
| DA | 3W3 | DAM3W3SA197 | DAMY3W3SA197 | DAME3W3SA197 |
| DA | 3WK3♣ | DAM3WK3SA197 | DAMY3WK3SA197 | DAME3WK3SA197 |
| DB | 5W5 | DBM5W5SA197 | DBMY5W5SA197 | DBME5W5SA197 |
| DB | 9W4 | DBM9W4SA197 | DBMY9W4SA197 | DBME9W4SA197 |
| DB | 13W3 | DBM13W3SA197 | DBMY13W3SA197 | DBME13W3SA197 |
| DB | 17W2 | DBM17W2SA197 | DBMY17W2SA197 | DBME17W2SA197 |
| DB | 21W1 | DBM21W1SA197 | DBMY21W1SA197 | DBME21W1SA197 |
| DC | 8W8 | DCM8W8SA197 | DCMY8W8SA197 | DCME8W8SA197 |
| DC | 13W6 | DCM13W6SA197 | DCMY13W6SA197 | DCME13W6SA197 |
| DC | 17W5 | DCM17W5SA197 | DCMY17W5SA197 | DCME17W5SA197 |
| DC | 21WA4 | DCM21WA4SA197 | DCMY21WA4SA197 | DCME21WA4SA197 |
| DC | 25W3 | DCM25W3SA197 | DCMY25W3SA197 | DCME25W3SA197 |
| DC | 27W2 | DCM27W2SA197 | DCMY27W2SA197 | DCME27W2SA197 |
| DD | 24W7 | DDM24W7SA197 | DDMY24W7SA197 | DDME24W7SA197 |
| DD | 36W4 | DDM36W4SA197 | DDMY36W4SA197 | DDME36W4SA197 |
| DD | 43W2 | DDM43W2SA197 | DDMY43W2SA197 | DDME43W2SA197 |
| DD | 47W1 | DDM47W1SA197 | DDMY47W1SA197 | DDME47W1SA197 |

For contacts with 30 microinches gold substitute K126 for A197. Example: DEM5W1SK126
For M3 clinch nuts substitute X for E. Example: DEMX5W1SA197
♣ Keyed.

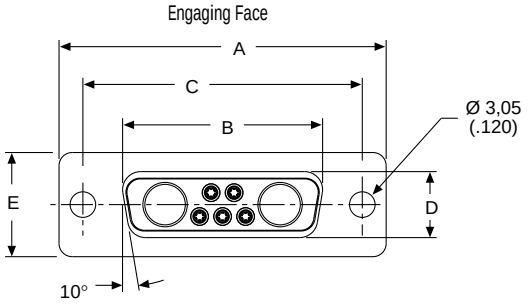


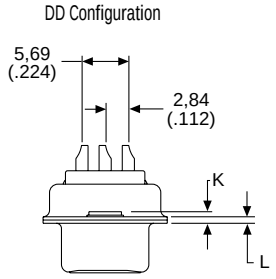


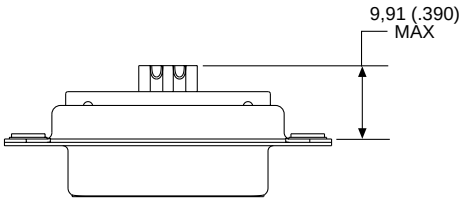


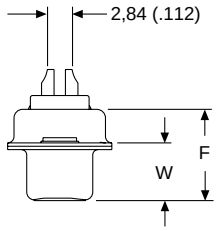


Dimensions

| Shell Size | A ±0,38 (.015) | B ±0,13 (.005) | C ±0,13 (.005) | D ±0,13 (.005) | E ±0,38 (.015) | F ±0,25 (.010) | W ±0,38 (.015) | K ±0,318 (.0125) | L ±0,25 (.010) |
|---|---|---|---|---|---|---|---|---|---|
| DE | 30,81 (1.123) | 16,33 (.643) | 24,99 (.984) | 7,90 (.311) | 12,55 (.494) | 10,90 (.429) | 6,94 (.273) | 1,206 (.0475) | 0,76 (.030) |
| DA | 39,14 (1.541) | 24,66 (.971) | 33,32 (1.312) | 7,90 (.311) | 12,55 (.494) | 10,90 (.429) | 6,94 (.273) | 1,206 (.0475) | 0,76 (.030) |
| DB | 53,04 (2.088) | 38,38 (1.511) | 47,04 (1.852) | 7,90 (.311) | 12,55 (.494) | 10,90 (.429) | 6,94 (.273) | 1,206 (.0475) | 0,76 (.030) |
| DC | 69,32 (2.729) | 54,84 (2.159) | 63,50 (2.500) | 7,90 (.311) | 12,55 (.494) | 10,90 (.429) | 6,94 (.273) | 1,206 (.0475) | 0,76 (.030) |
| DD | 66,93 (2.635) | 52,42 (2.064) | 61,11 (2.406) | 10,74 (.423) | 15,37 (.605) | 10,90 (.429) | 6,94 (.273) | 1,206 (.0475) | 0,76 (.030) |

## Crimp Cable Connectors without Contacts (Sizes DA-DD)

Plug

Reader's Resource
For contact cavity arrangements, see page 222.
For panel cutouts, see page 221.

Part Numbers

| Shell Size | Layout | Part Number |
|---|---|---|
| DA | 7W2 | DAA7W2PK87F0 |
| DA | 11W1 | DAA11W1PK87F0 |
| DA | 3W3 | DAA3W3PK87F0 |
| DB | 5W5 | DBA5W5PK87F0 |
| DB | 9W4 | DBA9W4PK87F0 |
| DB | 13W3 | DBA13W3PK87F0 |
| DB | 17W2 | DBA17W2PK87F0 |
| DB | 21W1 | DBA21W1PK87F0 |
| DC | 8W8 | DCA8W8PK87F0 |
| DC | 21WA4 | DCA21WA4PK87F0 |
| DC | 25W3 | DCA25W3PK87F0 |
| DD | 24W7 | DDA24W7PK87F0 |
| DD | 36W4 | DDA36W4PK87F0 |

Note: For crimp (Size 20) contacts and tooling, see pages 83 & 275.

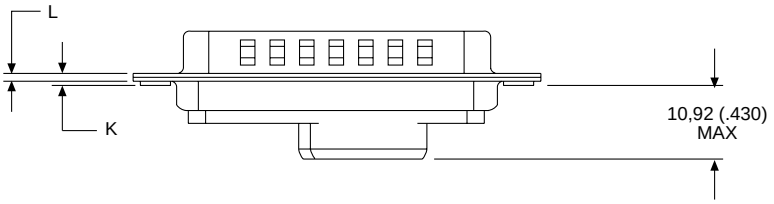


Engaging Face

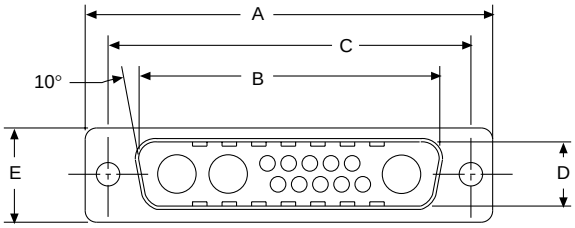


Dimensions

| Shell Size | A ±0,38 (.015) | B ±0,13 (.005) | C ±0,13 (.005) | D ±0,13 (.005) | E ±0,38 (.015) | F ±0,25 (.010) | W ±0,368 (.0145) | W ±0,41 (.016) | K ±0,317 (.0125) | K ±0,25 (.010) | L ±0,25 (.010) |
|---|---|---|---|---|---|---|---|---|---|---|---|
| DE | 30,81 (1.213) | 16,92 (.666) | 24,99 (.984) | 8,36 (.329) | 12,55 (.494) | 10,72 (.422) | 6,693 (.2635) | — | 1,206 (.0475) | — | 0,76 (.030) |
| DA | 39,14 (1.541) | 25,25 (.994) | 33,32 (1.312) | 8,36 (.329) | 12,55 (.494) | 10,72 (.422) | 6,693 (.2635) | — | 1,206 (.0475) | — | 0,76 (.030) |
| DB | 53,04 (2.088) | 38,96 (1.534) | 47,04 (1.852) | 8,36 (.329) | 12,55 (.494) | 10,82 (.426) | — | 6,84 (.269) | — | 1,52 (.060) | 0,99 (.039) |
| DC | 69,32 (2.729) | 55,42 (2.182) | 63,50 (2.500) | 8,36 (.329) | 12,55 (.494) | 10,82 (.426) | — | 6,84 (.269) | — | 1,52 (.060) | 0,99 (.039) |
| DD | 66,93 (2.635) | 52,81 (2.079) | 61,11 (2.406) | 11,07 (.436) | 15,37 (.605) | 10,82 (.426) | — | 6,84 (.269) | — | 1,52 (.060) | 0,99 (.039) |



Dimensions are shown in mm (inch)
Dimensions subject to change

## Crimp Cable Connectors without Contacts (Sizes DA-DD)

Receptacle

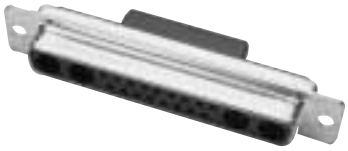

Reader's Resource
For contact cavity arrangements, see page 223.
For panel cutouts, see page 221.

Part Numbers

| Shell Size | Layout | Part Number |
|---|---|---|
| DA | 7W2 | DAA7W2SA197F0 |
| DA | 11W1 | DAA11W1SA197F0 |
| DA | 3W3 | DAA3W3SA197F0 |
| DB | 5W5 | DBA5W5SA197F0 |
| DB | 9W4 | DBA9W4SA197F0 |
| DB | 13W3 | DBA13W3SA197F0 |
| DB | 17W2 | DBA17W2SA197F0 |
| DB | 21W1 | DBA21W1SA197F0 |
| DC | 8W8 | DCA8W8SA197F0 |
| DC | 21WA4 | DCA21WA4SA197F0 |
| DD | 24W7 | DDA24W7SA197F0 |
| DD | 36W4 | DDA36W4SA197F0 |

Note: For crimp (Size 20) contacts and tooling, see pages 83 & 275.

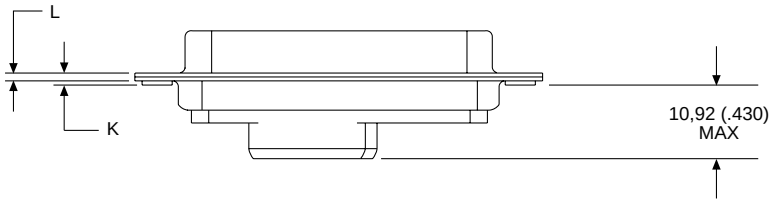


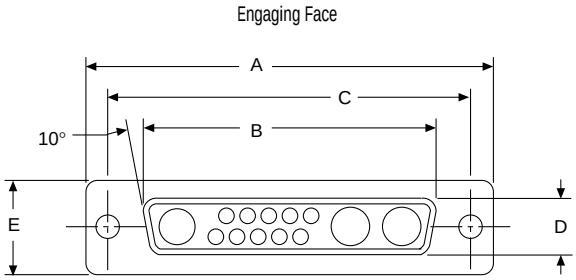


Dimensions

| Shell Size | A ±0,38 (.015) | B ±0,13 (.005) | C ±0,13 (.005) | D ±0,13 (.005) | E ±0,38 (.015) | F ±0,25 (.010) | W ±0,38 (.015) | K ±0,317 (.0125) | L ±0,25 (.010) |
|---|---|---|---|---|---|---|---|---|---|
| DE | 30,81 (1.213) | 16,33 (.643) | 24,99 (.984) | 7,90 (.311) | 12,55 (.494) | 10,90 (.429) | 6,94 (.273) | 1,206 (.0475) | 0,76 (.030) |
| DA | 39,14 (1.541) | 24,66 (.971) | 33,32 (1.312) | 7,90 (.311) | 12,55 (.494) | 10,90 (.429) | 6,94 (.273) | 1,206 (.0475) | 0,76 (.030) |
| DB | 53,04 (2.088) | 38,38 (1.511) | 47,04 (1.852) | 7,90 (.311) | 12,55 (.494) | 10,90 (.429) | 6,94 (.273) | 1,206 (.0475) | 0,76 (.030) |
| DC | 69,32 (2.729) | 54,84 (2.159) | 63,50 (2.500) | 7,90 (.311) | 12,55 (.494) | 10,90 (.429) | 6,94 (.273) | 1,206 (.0475) | 0,76 (.030) |
| DD | 66,93 (2.635) | 52,42 (2.064) | 61,11 (2.406) | 10,74 (.423) | 15,37 (.605) | 10,90 (.429) | 6,94 (.273) | 1,206 (.0475) | 0,76 (.030) |

## Shield Cans

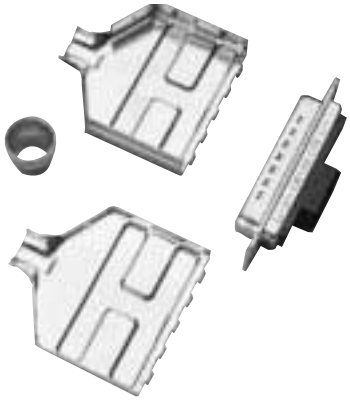

Order 1 top can, 1 bottom can, 1 ferrule per connector.

| Ø Cable | Ferrule Ø A | Ferrule Part Number | Crimp Tool Part Number | Crimp Tool Position |
|---|---|---|---|---|
| 4,8 - 5,5 | 6,25 (.246) | 304-8810-000 | D115433-1 | B |
| 5,5 - 6,2 | 6,25 (.246) | 304-8810-000 | D115433-1 | A |
| 6,2 - 7,2 | 8,20 (.323) | 304-8811-000 | D115433-2 | B |
| 7,2 - 8,2 | 8,20 (.323) | 304-8811-000 | D115433-2 | A |
| 8,2 - 9,5 | 11,50 (.452) | 304-8812-000 | D115433-3 | B |
| 9,5 - 11,1 | 11,50 (.452) | 304-8813-000 | D115433-3 | A |

### Part Numbers

| | |
|---|---|
| Top Can (B size): | 348-8946-000 |
| Bottom Can (B size): | 348-8945-000 |

Note: For other available can sizes, consult factory for details.

### Materials and Finishes

| | |
|---|---|
| Shield Can and Ferrule | |
| Material: | Steel |
| Finish: | Tin |

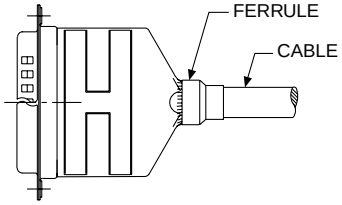


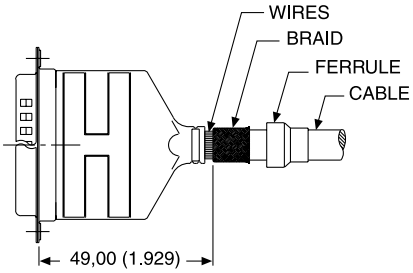


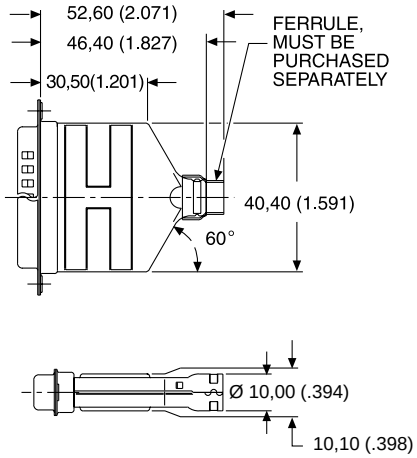


Ferrule

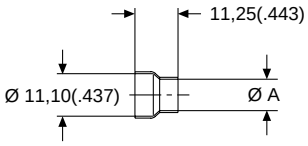


Wire Trim Dimensions

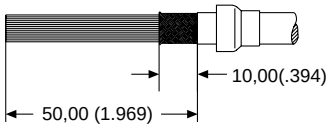


Crimp Tool Positions

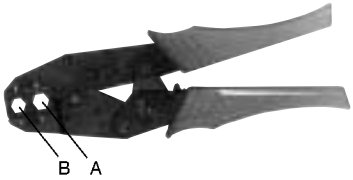




ITT Cannon

Dimensions are shown in mm (inch)
Dimensions subject to change

## Crimp (Size 20) Contacts

### Loose Contacts

Stamped contacts with insulation support are supplied loose for use with hand crimp tooling. Two sizes are available to accommodate wire ranges 20 - 26 AWG.

Pin Contact

Socket Contact

| Finish | Part Number Pin Contact 24-26 AWG | Part Number Pin Contact 20-24 AWG | Part Number Socket Contact 24-26 AWG | Part Number Socket Contact 20-24 AWG |
|---|---|---|---|---|
| 30µ inches Gold over Nickel | 030-2487-017 | 030-2487-016 | 030-2488-017 | 030-2488-016 |

For tooling, see this page.

### Reeled Contacts (5,000 Pieces per Reel)

Stamped contacts with insulation support are supplied on reels of 5,000 for use with semi-automatic strip and crimp machines. Two sizes are available to accommodate wire ranges 20 - 26 AWG.

Pin Contacts

Socket Contacts

| Finish | Part Number Pin Contact 24-26 AWG | Part Number Pin Contact 20-24 AWG | Part Number Socket Contact 24-26 AWG | Part Number Socket Contact 20-24 AWG |
|---|---|---|---|---|
| Gold over Nickel | 980-2000-925 | 980-2000-924 | 980-2000-926 | 980-2000-923 |
| 30µ inches Gold over Nickel | 980-2000-946 | 980-2000-945 | 980-2000-944 | 980-2000-943 |

For semi-automatic tooling, see page 275.

Pin Contacts

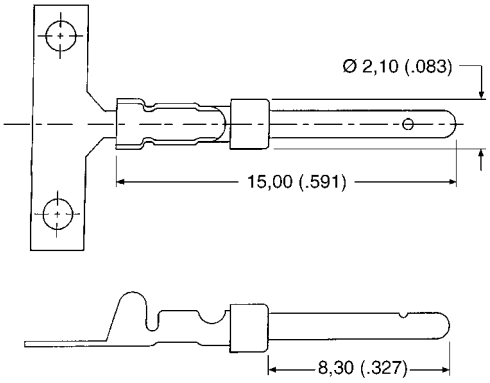


Socket Contacts

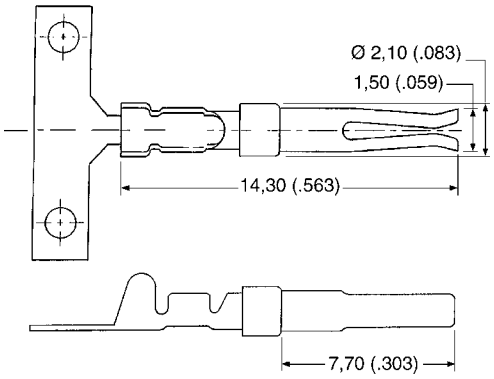


## Tooling

CCT-D*A-1

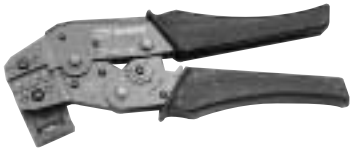

### Hand Crimp Tool

| Description | Part Number |
|---|---|
| CCT-D*A-1 | 995-2000-000 |

### Extraction Tool

| Description | Part Number | Wire Size |
|---|---|---|
| CIET-D*A-20-24 | 980-0008-135 | 20-24 AWG |
| CIET-D*A-24-26 | 980-0008-136 | 24-26 AWG |

For semi-automatic tooling, see page 275.

## Cable (Size 8) Loose Contacts — Coaxial 75 Ohm

Stamped Crimp/Crimp

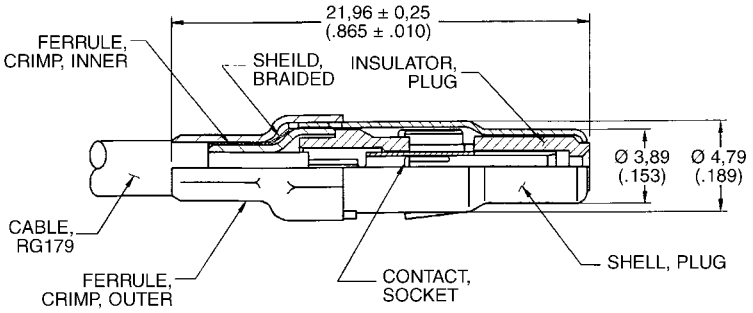


Recommended Wire Trim Dimensions

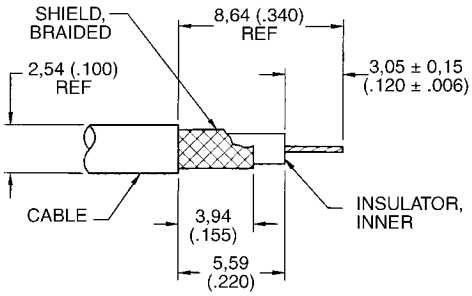


### Kit (Body, Ferrule, Center Contact)

| Stamped Crimp/Crimp | Kit Gold over Ni | Kit 30µ in. Gold over Ni | Kit 50µ in. Gold over Ni | RG Cable Number |
|---|---|---|---|---|
| Plug | D130322-2 | D130322-1 | D130322-6 | 179/U |
| Receptacle | D130344-1 | D130344 | D130344-2 | 179/U |

### Loose Components for High Volume (3 Pieces — Body, Ferrule, Center Contact)

| Stamped Crimp/Crimp | Body | Ferrule | Center Contact Gold over Ni 10,000 Reel | Center Contact 30µ in. Gold over Ni 10,000 Reel |
|---|---|---|---|---|
| Plug | 249-2272-000 | 304-0444-000 | 110238-1015 | 110238-1012 |
| Receptacle | 249-2271-000 | 304-0444-000 | 110238-1014 | 110238-1013 |

### Tooling for Stamped Crimp/Crimp

| Description | Crimping Tool | Tool Number |
|---|---|---|
| Stamped Center Conductor | Hand Crimp, "B" Crimp | CCTP-750HM |
| | Semi-Automatic Crimper | ABT-607 (Leased) |
| Stamped Outer Conductor | Hand Tool, Hex Crimp | CCTP-DM |
| | Pneumatic Hex Crimp | 995-2000-094 |

For semi-automatic tooling, see page 275.



Dimensions are shown in mm (inch)
Dimensions subject to change

## Cable (Size 8) Loose Contacts — Coaxial 75 Ohm — 90°

90° Crimp Braid/Solder Center Contact

| | Part Number Gold over Ni | Part Number 30µ in. Gold over Ni | Part Number 50µ in. Gold over Ni |
|---|---|---|---|
| Plug | D130357-1 | D130357 | D130357-4 |
| Receptacle | D130356-1 | D130356 | D130356-3 |

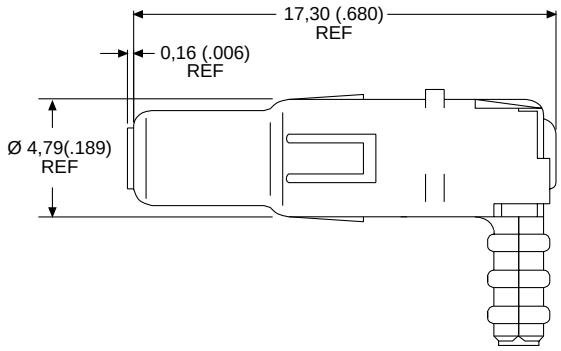


Plug

Note: Ferrule not shown.

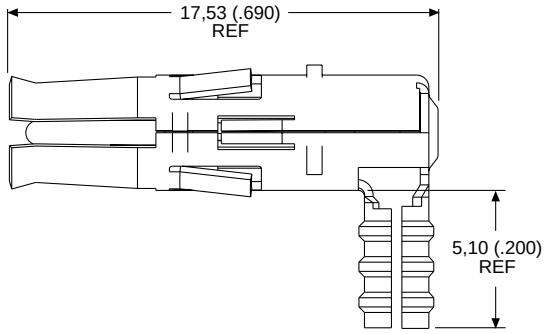


Receptacle

Note: Ferrule not shown.

Tooling for 90° Crimp Braid

| Description | Part Number |
|---|---|
| Hand Tool: | 995-0001-761 |
| Die Set: | 995-2000-110 |

## Cable (Size 8) Loose Contacts — Coaxial 50 Ohm — Straight

### Straight Crimp Braid

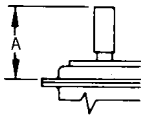


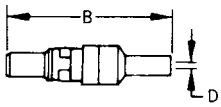


Plug

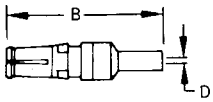


Receptacle

Note: Dimensions include outer sleeve.

| | Part Number Gold Over Nickel | Part Number 50µ in. Gold Over Copper | A max. | B max. | D min. | RG Cable Number Old | RG Cable Number New |
|---|---|---|---|---|---|---|---|
| Plug | DM53740 | DM53740-17 | 18,80 (.739) | 24,00 (.945) | 1,00 (.040) | 196/U | 178B/U |
| Plug | DM53740-1 | DM53740-15 | 18,80 (.739) | 24,00 (.945) | 1,70 (.067) | 187/U<br>188/U | 179B/U<br>316B/U |
| Plug | DM53740-35 | — | 18,80 (.739) | 24,00 (.945) | 1,70 (.067) | — | RD316 |
| Plug | DM53740-3 | DM53740-16 | 21,50 (.847) | 26,34 (1.037) | 2,79 (.110) | 195/U | 180B/U |
| Plug | DM53740-5 | DM53740-18 | 21,50 (.847) | 26,34 (1.037) | 3,18 (.125) | 58/U | 58B/U |
| Receptacle | DM53742 | DM53742-18 | 18,80 (.739) | 24,00 (.945) | 1,00 (.040) | 196/U | 178B/U |
| Receptacle | DM53742-1 | DM53742-16 | 18,80 (.739) | 24,00 (.945) | 1,70 (.067) | 187/U<br>188/U | 179B/U<br>316B/U |
| Receptacle | DM53742-36 | — | 18,80 (.739) | 24,00 (.945) | 1,70 (.067) | — | RD316 |
| Receptacle | DM53742-3 | DM53742-17 | 21,50 (.847) | 26,34 (1.037) | 2,79 (.110) | 195/U | 180B/U |
| Receptacle | DM53742-5 | DM53742-19 | 21,50 (.847) | 26,34 (1.037) | 3,18 (.125) | 58/U | 58B/U |

For crimp tooling, see page 89.

### Straight Solder Braid

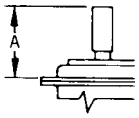


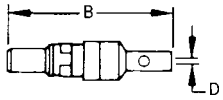


Plug

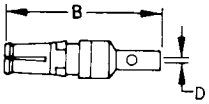


Receptacle

| | Part Number Gold Over Nickel | Part Number 50µ in. Gold Over Copper | A max. | B max. | D min. | RG Cable Number Old | RG Cable Number New |
|---|---|---|---|---|---|---|---|
| Plug | DM53740-5008 | DM53740-5105 | 18,80 (.739) | 24,00 (.945) | 1,00 (.040) | 196/U | 178B/U |
| Plug | DM53740-5001 | DM53740-5099 | 18,80 (.739) | 24,00 (.945) | 1,70 (.067) | 187/U<br>188/U | 179B/U<br>316B/U |
| Plug | DM53740-5145 | — | 18,80 (.739) | 24,00 (.945) | 1,70 (.067) | — | RD316 |
| Plug | DM53740-5002 | DM53740-5104 | 21,50 (.847) | 26,34 (1.037) | 2,79 (.110) | 195/U | 180B/U |
| Plug | DM53740-5005 | DM53740-5101 | 21,50 (.847) | 26,34 (1.037) | 3,18 (.125) | 58/U | 58/U |
| Plug (Short Type) | DM53740-5000 | DM53740-5100 | 17,00 (.670) | 22,20 (.874) | 1,14 (.045) | 196/U | 178B/U |
| Receptacle | DM53742-5006 | DM53742-5092 | 18,80 (.739) | 24,00 (.945) | 1,00 (.040) | 196/U | 178B/U |
| Receptacle | DM53742-5001 | DM53742-5089 | 18,80 (.739) | 24,00 (.945) | 1,70 (.067) | 187/U<br>188/U | 179B/U<br>316B/U |
| Receptacle | DM53742-5126 | — | 18,80 (.739) | 24,00 (.945) | 1,70 (.067) | — | RD316 |
| Receptacle | DM53742-5002 | DM53742-5091 | 21,50 (.847) | 26,34 (1.037) | 2,79 (.110) | 195/U | 180B/U |
| Receptacle | DM53742-5004 | DM53742-5086 | 21,50 (.847) | 26,34 (1.037) | 3,18 (.125) | 58/U | 58/U |
| Receptacle (Short Type) | DM53742-5000 | DM53742-5085 | 17,00 (.670) | 22,20 (.874) | 1,14 (.045) | 196/U | 178B/U |



Dimensions are shown in mm (inch)
Dimensions subject to change

## Cable (Size 8) Loose Contacts — Coaxial 50 Ohm — 90°

### 90° Crimp Braid

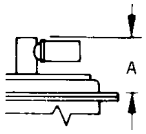


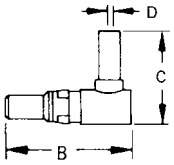


Plug

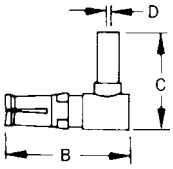


Receptacle

Note: Dimensions include outer sleeve.

| | Part Number Gold Over Nickel | Part Number 50µ in. Gold Over Copper | A max. | B max. | C | D ±0,13 (.005) | RG Cable Number Old | New |
|---|---|---|---|---|---|---|---|---|
| Plug | DM53741 | DM53741-12 | 13,46 (.530) | 18,92 (.745) | 15,10 (.594) | 1,14 (.045) | 196/U | 178B/U |
| Plug | DM53741-1 | DM53741-11 | 13,46 (.530) | 18,92 (.745) | 15,10 (.594) | 1,83 (.072) | 187/U<br>188/U | 179B/U<br>316B/U |
| Plug | DM53741-3 | DM53741-10 | 13,46 (.530) | 18,92 (.745) | 16,00 (.630) | 2,79 (.110) | 195/U | 180B/U |
| Plug | DM53741-4 | DM53741-13 | 13,46 (.530) | 18,92 (.745) | 16,00 (.630) | 3,18 (.125) | 58/U | 58B/U |
| Receptacle | DM53743-2 | DM53743-18 | 13,46 (.530) | 18,92 (.745) | 15,09 (.594) | 1,14 (.045) | 196/U | 178B/U |
| Receptacle | DM53743-3 | DM53743-16 | 13,46 (.530) | 18,92 (.745) | 15,09 (.594) | 1,83 (.072) | 187/U<br>188/U | 179B/U<br>316B/U |
| Receptacle | DM53743-5 | DM53743-17 | 13,46 (.530) | 18,92 (.745) | 16,00 (.630) | 2,79 (.110) | 195/U | 180B/U |
| Receptacle | DM53743-6 | DM53743-19 | 13,46 (.530) | 18,92 (.745) | 16,00 (.630) | 3,18 (.125) | 58/U | 58B/U |

For crimp tooling, see page 89.

### 90° Solder Braid

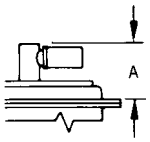


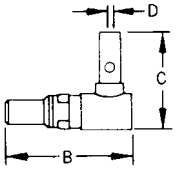


Plug

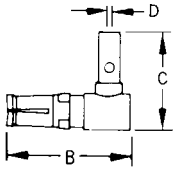


Receptacle

| | Part Number Gold Over Nickel | Part Number 50µ in. Gold Over Copper | A max. | B max. | C | D min. | RG Cable Number Old | New |
|---|---|---|---|---|---|---|---|---|
| Plug | DM53741-5000 | DM53741-5059 | 13,46 (.530) | 18,92 (.745) | 15,10 (.594) | 1,00 (.040) | 196/U | 178B/U |
| Plug | DM53741-5001 | DM53741-5062 | 13,46 (.530) | 18,92 (.745) | 15,10 (.594) | 1,70 (.067) | 187/U<br>188/U | 179B/U<br>316B/U |
| Plug | DM53741-5003 | DM53741-5063 | 13,46 (.530) | 18,92 (.745) | 16,00 (.630) | 2,79 (.110) | 195/U | 180B/U |
| Plug | DM53741-5004 | DM53741-5060 | 13,46 (.530) | 18,92 (.745) | 16,00 (.630) | 3,18 (.125) | 58/U | 58/U |
| Receptacle | DM53743-5000 | DM53743-5073 | 13,46 (.530) | 18,92 (.745) | 15,09 (.594) | 1,00 (.040) | 196/U | 178B/U |
| Receptacle | DM53743-5001 | DM53743-5076 | 13,46 (.530) | 18,92 (.745) | 15,09 (.594) | 1,70 (.067) | 187/U<br>188/U | 179B/U<br>316B/U |
| Receptacle | DM53743-5003 | DM53743-5077 | 13,46 (.530) | 18,92 (.745) | 16,00 (.630) | 2,79 (.110) | 195/U | 180B/U |
| Receptacle | DM53743-5004 | DM53743-5074 | 13,46 (.530) | 18,92 (.745) | 16,00 (.630) | 3,18 (.125) | 58/U | 58B/U |

## Insertion/Extraction Instructions for Coaxial, High Power and High Voltage Contacts

Insertion Tool

No insertion tool is required. The contact is easily snapped in from the rear of the connector manually.

Insertion Instructions

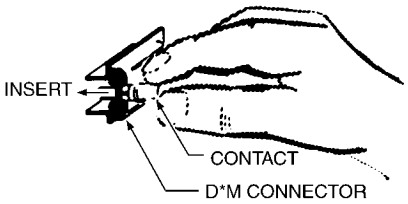


## Extraction Tool

CET-C6B-2

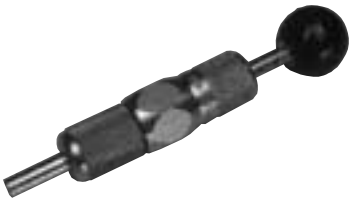

The CET-C6B-2 tool extracts all coaxial, high power and high voltage contacts (plug and receptacle).

| Description | Part Number |
|---|---|
| CET-C6B-2 | 070064-0002 |

Operating Instructions

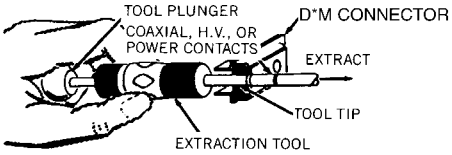


To extract the coaxial contact, hold the tool by the body and insert the tip into the front of the contact cavity until it bottoms and closes the coaxial retaining ring. Holding the body in this position securely enough to keep coaxial retaining ring closed, push the plunger; contact will be pushed out of the rear of the assembly.



Dimensions are shown in mm (inch)
Dimensions subject to change

## Coaxial Assembly Instructions

### Straight and 90° Coaxial Assembly
STEP 1:
Slide the outer ring over the cable jacket. Trim the cable as specified in the table of Coaxial Cable Trim Dimensions (see this page). Insert the cable dielectric and center conductor into the inside diameter of the inner sleeve. Then solder the center conductor to the coaxial center contact.

Straight Coaxial

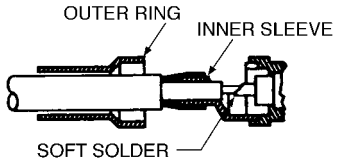


90° Coaxial

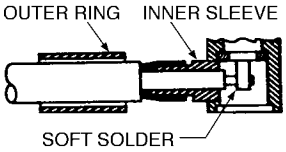


### Straight and 90° Coaxial Assembly
STEP 2:
Slide the outer ring forward until it is flush with the coaxial shell containing the braid between the outer ring and the inner sleeve. For solder type coaxes, soft solder the outer ring to the assembly through the cross-drilled solder hold. For crimp type coaxes, crimp with the appropriate tool in the area defined.

Straight Coaxial

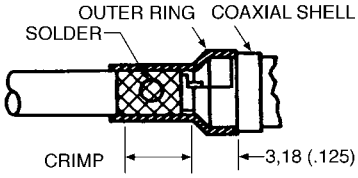


90° Coaxial

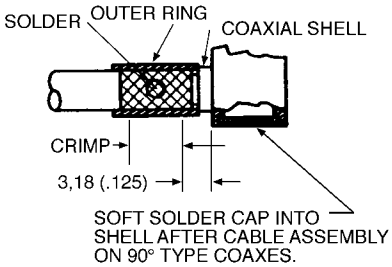


### Coaxial Cable Trim Dimensions

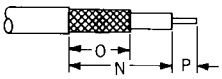


| RG Cable Number | Straight Coaxial N ± 0,25 (.010) | Straight Coaxial O ± 0,25 (.010) | Straight Coaxial P ± 0,25 (.010) | 90° Coaxial N ± 0,25 (.010) | 90° Coaxial O ± 0,25 (.010) | 90° Coaxial P ± 0,25 (.010) |
|---|---|---|---|---|---|---|
| 196/U, 178B/U, 187/U, 188/U, 179B/U, 316B/U | 7,92 (.312) | 6,35 (.250) | 1,98 (.078) | 9,52 (.375) | 5,94 (.234) | 1,57 (.062) |
| 195/U, 180B/U, 58/U, 58B/U | 9,52 (.375) | 7,92 (.312) | 1,98 (.078) | 10,69 (.422) | 7,92 (.312) | 2,39 (.094) |

### Crimp Tooling

Hand tool with integral die set for all coaxial straight crimp braid.

| RG Cable Number | Tool Part Number | Description | Closure |
|---|---|---|---|
| 196/U, 178B/U | 070051-0000 | CCT-DM | C |
| 187/U, 179B/U, 188/U, 316B/U | 070051-0000 | CCT-DM | B |
| 195/U, 180B/U, 58/U, 58B/U | 070051-0000 | CCT-DM | A |

## Cable (Size 8) Loose Contacts — High Power — Solder

Plug

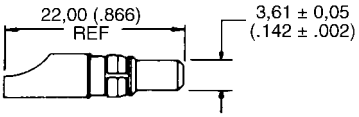


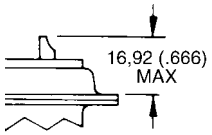


| Part Number Gold Over Nickel | Part Number 50µ in. Gold over Ni | Current Rating | Wire Size |
|---|---|---|---|
| DM53745-1 | DM53745-28 | 40 A | 8 AWG |
| DM53745-7 | DM53745-27 | 20 A | 12 AWG |
| DM53745-8 | DM53745-25 | 10 A | 16 AWG |

Receptacle

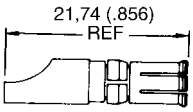


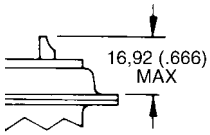


| Part Number Gold Over Nickel | Part Number 50µ in. Gold over Ni | Current Rating | Wire Size |
|---|---|---|---|
| DM53744-1 | DM53744-21 | 40 A | 8 AWG |
| DM53744-6 | DM53744-25 | 20 A | 12 AWG |
| DM53744-7 | DM53744-24 | 10 A | 16 AWG |

## Cable (Size 8) Loose Contacts — High Power — Crimp

Plug

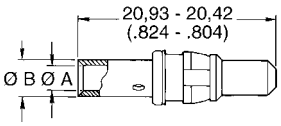


Recommended Wire Trim Length

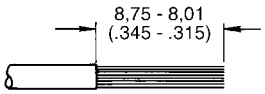


| Part Number Gold Over Nickel | Part Number 30µ in. Gold over Ni | Part Number 50µ in. Gold over Ni | ØA max. | ØB max. | Current Rating | Wire Size |
|---|---|---|---|---|---|---|
| DM130338-4 | DM130338 | DM130338-1 | 4,60 (.181) | 5,84 (.230) | 40 A | 8 AWG |
| DM130339-4 | DM130339 | DM130339-1 | 2,54 (.100) | 5,54 (.218) | 20 A | 12 AWG |
| DM130340-4 | DM130340 | DM130340-1 | 1,07 (.067) | 2,59 (.102) | 10 A | 16 AWG |

Receptacle

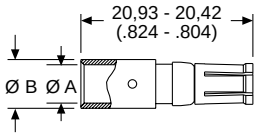


Recommended Wire Trim Length

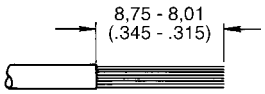


| Part Number Gold Over Nickel | Part Number 30µ in. Gold over Ni | Part Number 50µ in. Gold over Ni | ØA max. | ØB max. | Current Rating | Wire Size |
|---|---|---|---|---|---|---|
| DM130341-4 | DM130341 | DM130341-1 | 4,60 (.181) | 5,84 (.230) | 40 A | 8 AWG |
| DM130342-4 | DM130342 | DM130342-1 | 2,54 (.100) | 5,54 (.218) | 20 A | 12 AWG |
| DM130343-4 | DM130343 | DM130343-1 | 1,07 (.067) | 2,59 (.102) | 10 A | 16 AWG |

## High Power Crimp Tooling

M300-BT

| Wire Size | Crimp Tool/Locator | | |
|---|---|---|---|
| | Crimp Tool | Tool Setting Number | Locator |
| 8 AWG | M300-BT | 6 | TP968 |
| 10 AWG | M300-BT | 5 | TP968 |
| 12/14 AWG | M300-BT | 1 | TP968 |
| 16 AWG | FT-8 | 6 | TH554 |
| 18 AWG | FT-8 | 5 | TH554 |



ITT Cannon

Dimensions are shown in mm (inch)
Dimensions subject to change

## Cable (Size 8) Loose Contacts — High Voltage — Straight

Plug

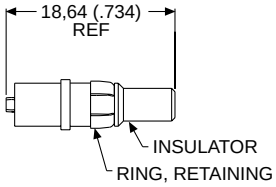


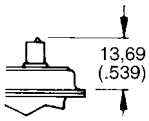


For tooling, see page 88.

| Part Number Gold over Ni | Part Number 50µ. in. Gold | Wire Size |
|---|---|---|
| DM51157 | DM51157-8 | 20 AWG |

Receptacle

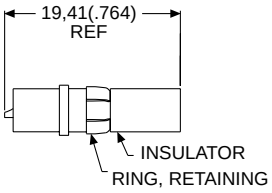


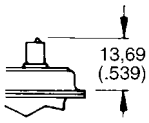


For tooling, see page 88.

| Part Number Gold over Ni | Part Number 50µ. in. Gold | Wire Size |
|---|---|---|
| DM51155 | DM51155-7 | 20 AWG |

## Cable (Size 8) Loose Contacts — High Voltage — 90°

Plug

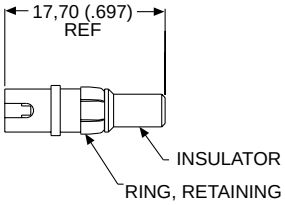


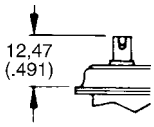


For tooling, see page 88.

| Part Number Gold over Ni | Part Number 50µ. in. Gold | Wire Size |
|---|---|---|
| DM51157-5000 | DM51157-5005 | 20 AWG |

Receptacle

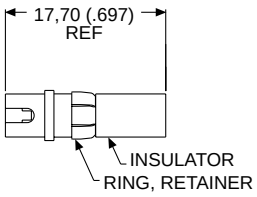


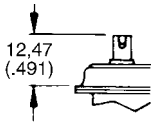


For tooling, see page 88.

| Part Number Gold over Ni | Part Number 50µ. in. Gold | Wire Size |
|---|---|---|
| DM51155-5000 | DM51155-5004 | 20 AWG |

## PCB (Size 8) Loose Contacts — Coaxial 75 Ohm — Straight

Plug

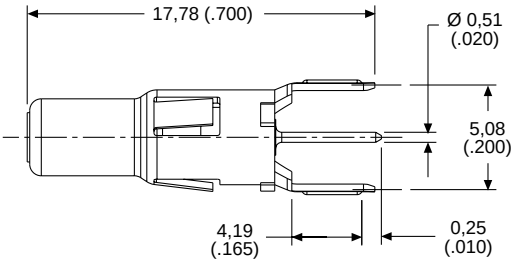


| Description | Part Number |
|---|---|
| Plug | DM130358-2 |

Receptacle

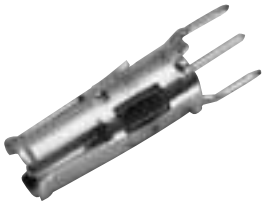

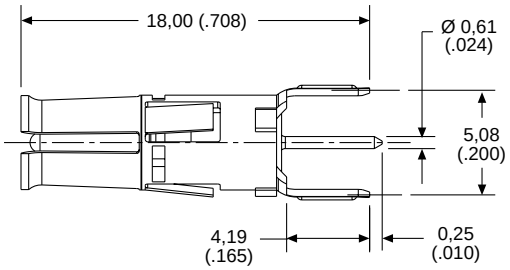


| Description | Part Number |
|---|---|
| Receptacle | DM130346-2 |

## PCB (Size 8) Loose Contacts — Coaxial 75 Ohm — 90°

Plug

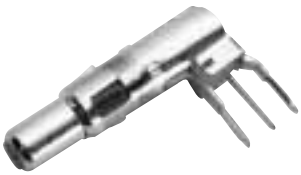

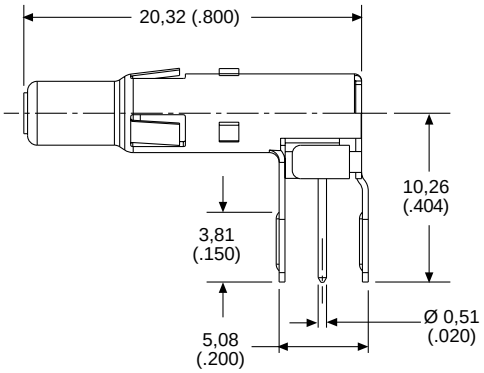


| Description | Part Number |
|---|---|
| Plug | DM130352-2 |

Receptacle

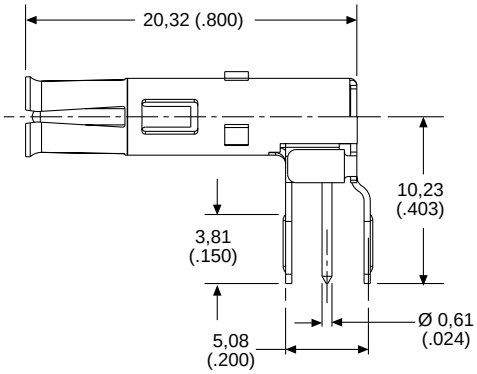


| Description | Part Number |
|---|---|
| Receptacle | DM130321-3 |



ITT Cannon

Dimensions are shown in mm (inch)
Dimensions subject to change

## PCB (Size 8) Loose Contacts — High Power — Straight

Pin

| Description | Part Number |
|---|---|
| Pin | DM53745-110 |

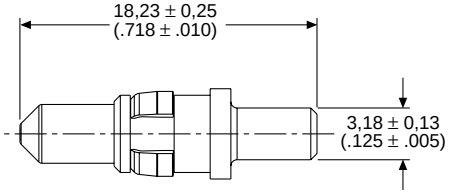


Socket

| Description | Part Number |
|---|---|
| Socket | DM53744-98 |

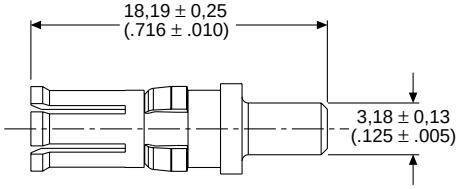


## PCB (Size 8) Loose Contacts — High Power —90°

Pin

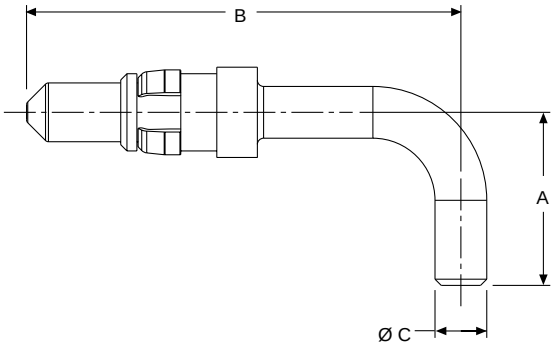


| Shell Size | Part Number | A ± 0,25 (.010) | B ±0,25 (.010) | Ø C ±0,13 (.005) |
|---|---|---|---|---|
| DE, DA, DB, DC | DM53745-104 | 10,62 (.418) | 26,64 (1.049) | 3,18 (.125) |
| DD | DM53745-107 | 13,41 (.528) | 26,64 (1.049) | 3,18 (.125) |
| European Footprint DE, DA, DB, DC, DD | DM53745-120 | 18,06 (.711) | 11,00 (.433) | 2,90 (.114) |

Socket

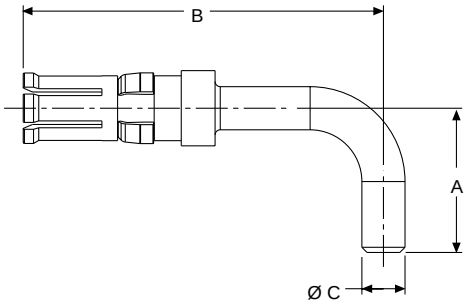


| Shell Size | Part Number | A ± 0,25 (.010) | B ±0,25 (.010) | Ø C ±0,13 (.005) |
|---|---|---|---|---|
| DE, DA, DB, DC | DM53744-92 | 13,41 (.528) | 26,52 (1.044) | 3,18 (.125) |
| DD | DM53744-95 | 10,62 (.418) | 26,52 (1.044) | 3,18 (.125) |
| European Footprint DE, DA, DB, DC, DD | DM53744-107 | 11,00 (.433) | 17,93 (.706) | 2,90 (.114) |

## PCB (Size 8) Loose Contacts — High Voltage — Straight

Plug

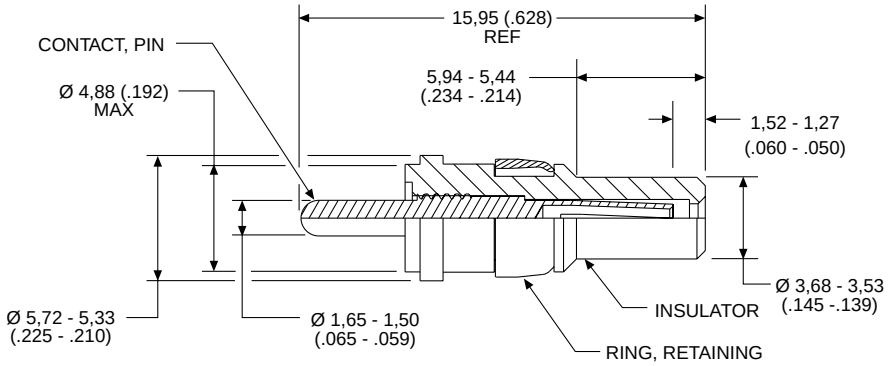


| Part Number Gold over Ni | Part Number 50µ in. Gold |
|---|---|
| DM51157-13 | DM51157-14 |

Receptacle

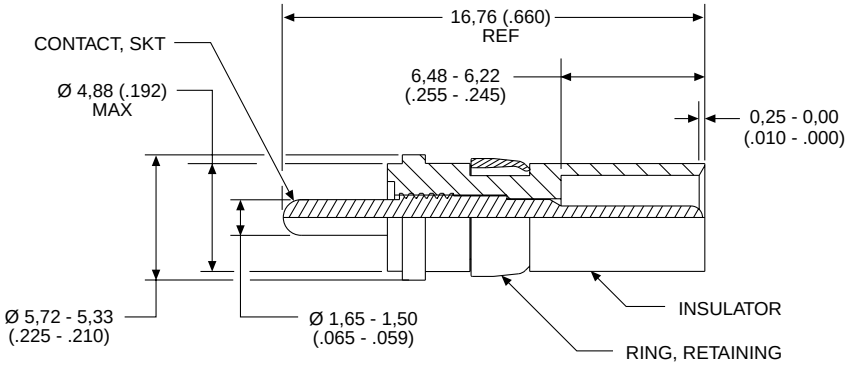


| Part Number Gold over Ni | Part Number 50µ in. Gold |
|---|---|
| DM51155-12 | DM51155-13 |



ITT Cannon

Dimensions are shown in mm (inch)
Dimensions subject to change

## PCB Guide Pin and Socket

Installs into any Combo D, Size 8 cavity. This guide pin and socket system is ideal for blind mate applications where space is limited.

### PCB Guide Pin

| Part Number | Material | Finish |
|---|---|---|
| DM53745-126 | Copper Alloy | Tin |

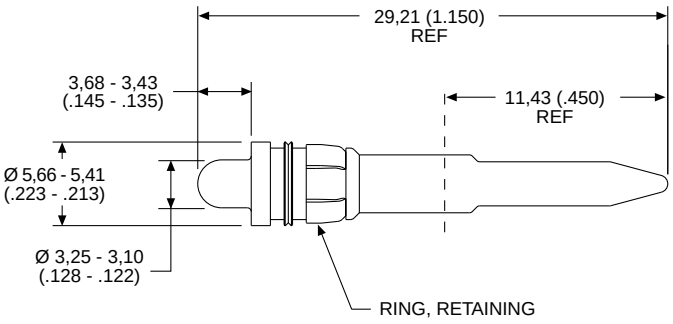


### PCB Guide Socket

| Part Number | Material | Finish |
|---|---|---|
| 248-2967-000 | Copper Alloy | Tin |

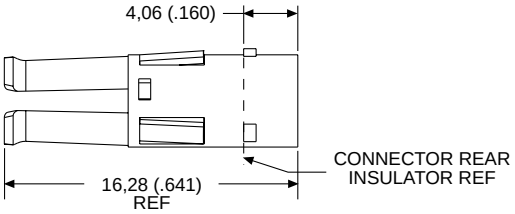

Selection Index Page

Commercial Shielded Micro D

An Introduction . . . . . 97
Locking/Latching Options . . . . . 98
Cable Assemblies — Pigtail. . . . . 98
PCB Connector 90° — Single or Stacked. . . . . 99
Cable Connectors (Unassembled Components) . . . . . 100
Crimp Contacts . . . . . 100
Tooling. . . . . 101
MDSM SSA Compatible Cable Assemblies . . . . . 102



Dimensions are shown in mm (inch)
Dimensions subject to change

MDSM is the commercial industry's smallest D-type connector for shielded I/O wire-to-board applications. Requiring less than 1/3 the area of a traditional D Subminiature connector, MDSM is designed for situations where space and EMI shielding are the primary design drivers.

Unlike other micro connectors, MDSM's rugged construction and unique contact design combined with a PdNi contact finish provide durability of 10,000 mating cycles. All of this comes in a sleek package that includes a snap together shield can and a slide over boot producing a cable assembly with an overmolded look and a low assembled cost. MDSM is an ideal solution for applications where size, shielding, durability and aesthetics are key design criteria.

Applications:
- Electronic Notepads
- VME Cards
- Multiplexors
- Serial Storage Devices
- Computer Workstations
- Hand Held Devices
- Bar Code Scanners

## Product Features

- 1,27 (.050) Pitch / Saves Space
- Fully Shielded / Reduces EMI
- Crimp Contacts / Applied Cost Savings
- Accessories Included / Fewer Part Numbers
- PdNi Plating / 10,000 Mating Cycles
- Stacked Versions / Saves Horizontal Space
- Slide Over Boot / Results in Overmolded Appearance
- Choice of Two Different Latching Options (Thumbscrew / Push-Pull)
- Approvals & Certifications
  - SSA (Serial Storage Architecture)
  - U.L. File Number E8572
  - ISO 9001

## Specifications

| | |
|---|---|
| Temperature Rating | − 55°C to 125°C |
| Current Rating | 1 A — temp dependent |
| Contact Resistance | 20 mΩ Max. |
| Insulation Resistance | 5000 MΩ Min. |
| Dielectric Withstanding Voltage | 350 V at Sea Level |
| Durability | 10,000 Mating Cycles |
| Shock / Vibration | 50 G's / 50 G's |
| Wire Size | 26 to 30 AWG |

## Materials and Finishes

| Description | Material | Finish |
|---|---|---|
| Shell | Steel | Nickel |
| Shield Can | Steel | Tin |
| Cover | Steel | Tin |
| Insulator | Thermoplastic, UL94 V-O | None |
| Contacts | Copper Alloy | Gold flash over 30 microinches PdNi in mating area, Tin on balance |

## Contact Arrangements

(Face View of Pin Insert — Use Mirror Image for Socket Side)

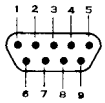

9 Contacts

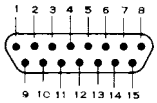

15 Contacts

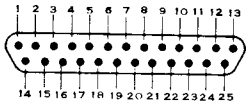

25 Contacts

ITT Cannon

Dimensions are shown in mm (inch)
Dimensions subject to change

## Locking/Latching Options

Jackscrew

The jackscrew locking system is designed for applications which require a secure connection. Utilize thumbscrews when the connectors are infrequently unmated.

Push/Pull

The push/pull latching system is designed for applications which require a quick connect and disconnect. A spring retention mechanism latches to a post on the board side to prevent unintentional unmatings.

Z10 Jackpost

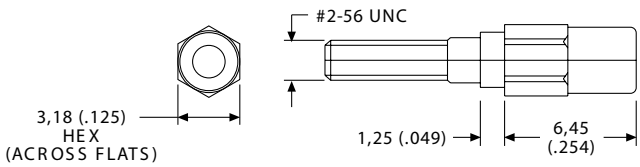


Note: Two Jackposts supplied with boardside connectors.

Z42 Jackpost

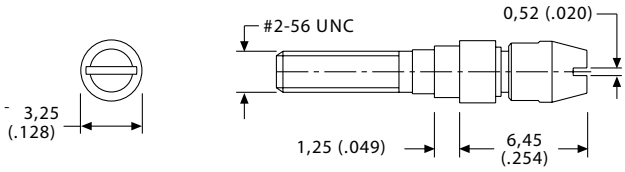


Note: Two Jackposts supplied with boardside connectors.



Dimensions are shown in mm (inch)
Dimensions subject to change

## PCB Connector 90° - Single

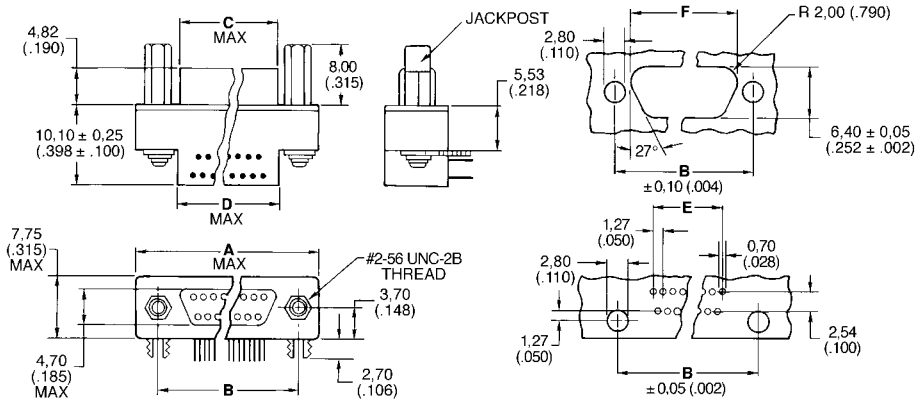


Note: Standard jackpost offering recommended for use with .060 panel.

| No. of Contacts | Part Numbers - Single | | A max. | B | C max. | D max. | E | F ±0,05 (.002) |
|---|---|---|---|---|---|---|---|---|
| | Thumbscrew | Push/Pull | | | | | | |
| 9 | MDSM-9PE-Z10-VR25* | MDSM-9E-Z42-VR25* | 19,90 (.783) | 14,35 (.565) | 8,60 (.339) | 9,00 (.354) | 5,08 (.200) | 10,24 (.403) |
| 15 | MDSM-15PE-Z10-VR22 | MDSM-15PE-Z42-VR22 | 23,60 (.929) | 18,16 (.715) | 12,30 (.484) | 12,90 (.508) | 8,89 (.350) | 14,01 (.551) |
| 25 | MDSM-25PE-Z10-VR17 | MDSM-25PE-Z42-VR17 | 29,95 (1.179) | 24,51 (.965) | 18,65 (.734) | 19,25 (.758) | 15,24 (.600) | 20,35 (.801) |

*For use with SSA applications

## PCB Connector 90° - Stacked

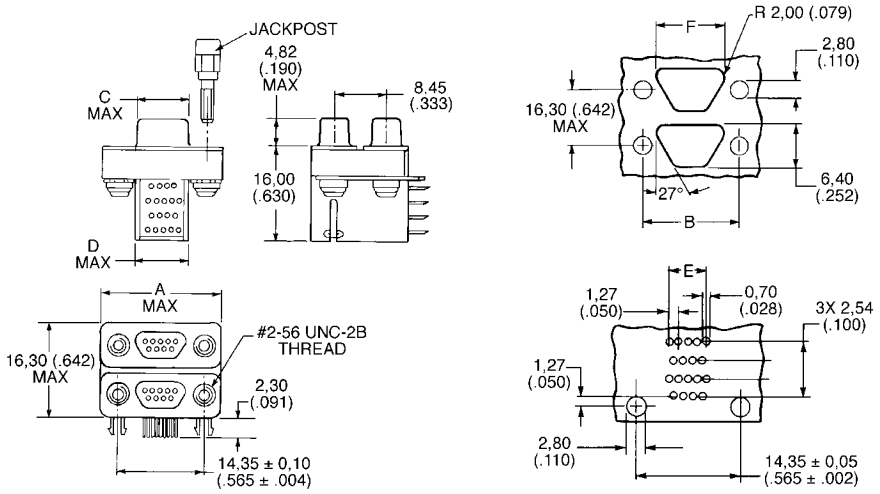


| No. of Contacts | Part Numbers - Stacked | | A max. | B | C max. | D max. | E | F |
|---|---|---|---|---|---|---|---|---|
| | Thumbscrew | Push/Pull | | | | | | |
| 18 | MDSM-18PE-Z10-VR25* | MDSM-18PE-Z42-VR25* | 19,90 (.783) | 14,35 (.565) | 8,60 (.339) | 9,00 (.354) | 5,08 (.200) | 10,24 (.403) |
| 30 | MDSM-30PE-Z10-VR22 | MDSM-30PE-Z42-VR22 | 23,50 (.925) | 18,16 (.715) | 12,30 (.484) | 12,71 (.500) | 8,89 (.350) | 14,00 (.551) |

*For use with SSA applications

## Cable Connectors (Unassembled Components)

### Jackscrew

Cable connectors are supplied as complete kits with insulator, hood, locking hardware, shell/shield assembly, and cover, bulk packaged.

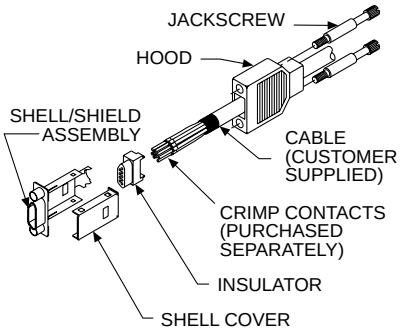


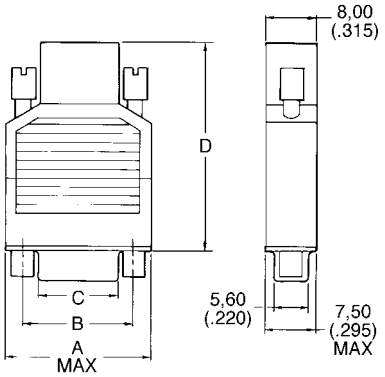


### Push/Pull

Cable connectors are supplied as complete kits with insulator, hood, shell/shield assembly, and cover, bulk packaged.

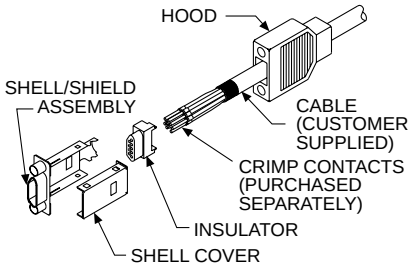


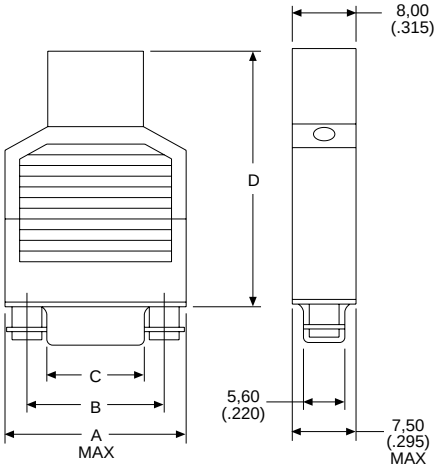


| Layout | Jackscrew Part Numbers | Push/Pull Part Numbers | A max. | B 0,10 (.004) | C 0,10 (.004) | D max. | Max. Cable Entry |
|---|---|---|---|---|---|---|---|
| 9 | MDSM-9SC-Z11-VS1 | MDSM-9SC-Z24-VS1 | 19,90 (.783) | 14,35 (.565) | 9,45 (.372) | 35,50 (1.40) | 5,70 (.224) |
| 15 | MDSM-15SC-Z11-VS1 | MDSM-15SC-Z24-VS1 | 23,70 (.993) | 18,16 (.715) | 13,17 (.519) | 35,50 (1.40) | 6,70 (.264) |
| 25 | MDSM-25SC-Z11-VS1 | MDSM-25SC-Z24-VS1 | 30,05 (1.183) | 24,51 (.965) | 19,52 (.769) | 42,50 (1.67) | 7,90 (.311) |

Note: VS1 refers to packaging multiples of 100.
Contacts are sold separately, see this page.

## Crimp Contacts

### Wire Trim Dimensions

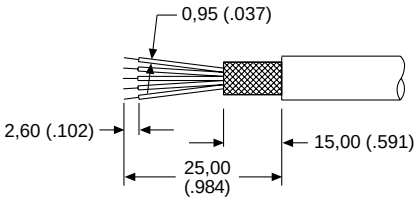


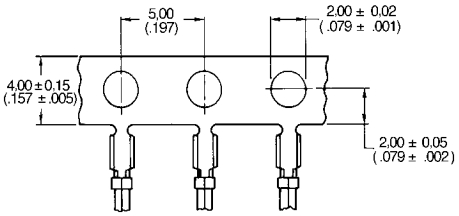


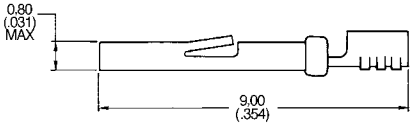


| | Part Numbers | |
|---|---|---|
| | 1,000 Piece Reel | 10,000 Piece Reel |
| Socket | MDS-S-TS | MDS-S-RL |

For crimp tooling, see page 101.



ITT Cannon

Dimensions are shown in mm (inch)
Dimensions subject to change

## Contact Crimping Tools

### Parallel Action Low Volume Hand Tool

Part Number: CCTP-MDS

Note: For use with individual contacts (break off reel MDS-S-TS or MDS-S-RL.

### Hand Tool

Part Number: CCTR-MDS

Note: For use with reeled contacts - Part Number MDS-S-TS.

### Semi-Automatic Crimper/Stripper

Part Number: ABT-620-MDS (Lease Only)

Note: For use with reeled contacts - Part Number MDS-S-RL.
For additional information, see page 275.
Crimp dies for SSA Cable will be offered by ITT Cannon. Consult factory for details.

## Contact Insertion/Extraction Tools

### Jackpost Tool

Part Number: CIET-MDSM

Note: For use with Z10 Jackpost.

### Insertion Tool

Part Number: 120090-0102

Note: Contacts cannot be removed from MDSM connectors.

## Shield Crimp Tooling

Shield crimping requires four items; one press, one locator, and one each of the two dies listed below.
Locator and Dies for Shield Termination Ordered Separately

| | Part Numbers | |
|---|---|---|
| Layout | Locator | Die |
| 9 | 317-8666-013 | 274-8649-332/274-8649-333 |
| 15 | 317-8666-014 | 274-8649-334/274-8649-335 |
| 25 | 317-8666-016 | 274-8649-338/274-8649-339 |

Note: For assembly instructions and crimping information, refer to Manual #MY-1/190.

### Hand Press

Part Number: CHP-MDSM-SR

### Pneumatic Press

Part Number: CPT-MDSM-SR

## MDSM SSA Compatible Cable Assemblies

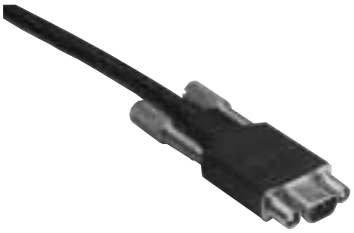

ITT Cannon's 9 position MDSM connectors have been designed into the ANSI specification called SSA, ''Serial Storage Architecture,'' as the external I/O. SSA is a new serial interface for interconnecting storage devices, storage subsystems, servers and workstations. Storage subsystems are increasing in function, availability, density and performance. With this comes the trend for them to become more complex and ITT Cannon has the interconnect system which meets SSA's high performance requirements.

SSA is an architecture which allows these new subsystems to be implemented more easily and at lower costs than other new high speed parallel interfaces. SSA permits the transfer of data at progressively higher speeds - 20 MB/sec interface currently available with 40 MB/sec becoming available in 1997/98. ITT Cannon's MDSM connector not only functions at these high speeds, but also brings to SSA smaller, less cumbersome and higher reliability cables and connectors than current options.

ITT Cannon is offering SSA compatable external cable assemblies in six different lengths to meet your needs. These assemblies consist of two MDSM 9SC type cable connectors terminated to SSA specified external cable.

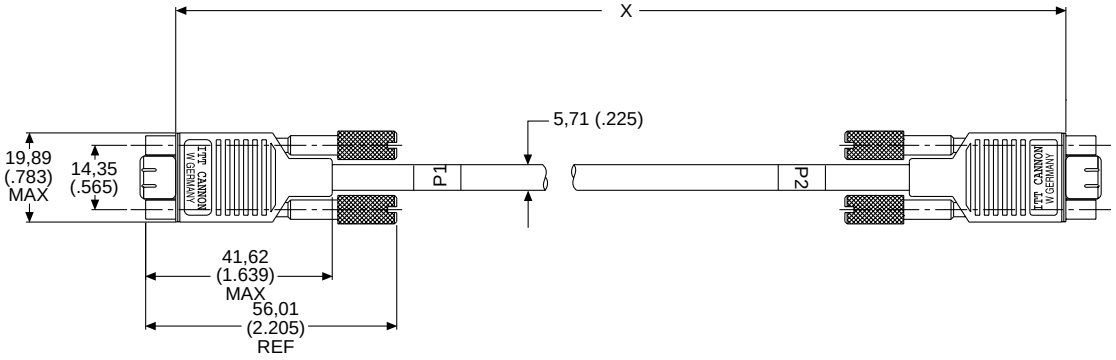


Note: Cables shown with Z50 thumbscrews.

| Part Number | X<br>Meter (Feet) | Tolerance |
|---|---|---|
| CA112104 | 0,50 (1.600) | ±25,00 (1.000) |
| CA112104-1 | 1,00 (2.200) | ±25,00 (1.000) |
| CA112104-2 | 3,00 (9.800) | ±25,00 (1.000) |
| CA112104-3 | 5,00 (16.400) | ±64,00 (2.500) |
| CA112104-4 | 10,00 (32.800) | ±64,00 (2.500) |
| CA112104-5 | 20,00 (65.600) | ±64,00 (2.500) |

Note: For push/pull assemblies or other thumbscrews, please consult the factory.
Crimp dies for SSA applications will be offered by ITT Cannon. Consult factory for details.



Dimensions are shown in mm (inch)
Dimensions subject to change

Pinout

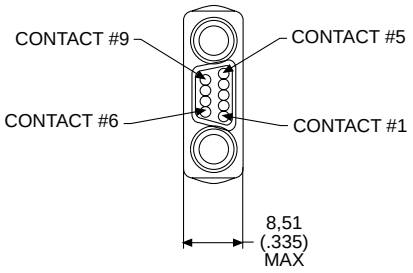


SSA External Cable Wiring Table

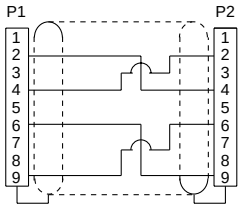


Note: Shield connected to both shells.

External Cable Pinouts

| P1 | | P2 | |
|---|---|---|---|
| Pin | Signal Name | Pin | Signal Name |
| 2 | LineOut− | 4 | LineIn− |
| 6 | LineOut+ | 9 | LineIn+ |
| 4 | LineIn− | 2 | LineOut− |
| 9 | LineIn+ | 6 | LineOut+ |

Note: Pins 1, 3, 5, 7 and 8 are not connected.

SSA External Cable Wire Cross Section (For Reference Only)

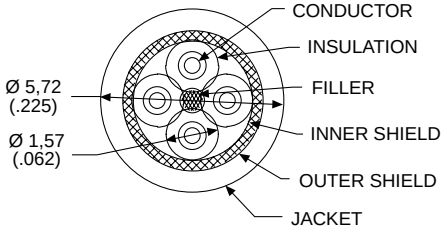


Transfer Impedance Performance
Requirements for External SSA Connections

| Frequency MHz | Value (dB-Ohm)(max.) |
|---|---|
| 30 | −25 |
| 159 | −16 |
| 500 | −10 |

Selection Index Page

Filter D
An Introduction to D*JK and D*JT . . . . . 105
D*JK Filter Performance and Electrical Data . . . . . 106
D*JT Filter Performance and Electrical Data . . . . . 107
D*JK Connectors
Standard Footprint .318♦ or .283♦♦ inches
90° PC Tails . . . . . 108
90° PC Tails, Metal Brackets . . . . . 112
European Footprint 10,2♦ or 9,4♦♦ mm
90° PC Tails . . . . . 110
90° PC Tails, Metal Brackets . . . . . 114
90° PC Tails, Plastic Brackets & Grounding Straps . . . . . 116
90° PC Tails, Plastic Brackets . . . . . 118
Straight PC Tails . . . . . 120
D*JT Connectors
Solder Cup . . . . . 122
Combo — High Power 90° . . . . . 124
Combo — High Power Straight . . . . . 126
Combo — High Power Solder Cup . . . . . 128

♦ Connector footprint measured from the front shell.
♦♦ Connector footprint measured from the rear shell.



Dimensions are shown in mm (inch)
Dimensions subject to change

## D*JK/D*JT

Filter connectors series D*JK and D*JT from ITT Cannon especially designed for commercial applications provide excellent protection against EMI and RFI.

Using D Subminiature standard components a cost-effective production can be achieved as well as 100% compatibility with equivalent products according to DIN 41652. D Subminiature standard accessories can be used.

High quality tubular ceramic capacitors are assembled onto the D*JK contacts and soldered to contact and backshell while series D*JT connectors apply planar array filters.

Applications:
- EMI/RFI Sensitive Electronics
- Test & Measurement Equipment
- Computer Equipment
- Medical Equipment
- Telecommunication Transmission

## Product Features

- HF–tightness and mechanical stability by closed backshell
- Free-stamped grounding fingers (pin connector only)
- Straight and 90° solder pins (D*JK)
- Solder cups, straight and 90° solder pins (D*JT)
- Versatile mounting possibilities (brackets, captive nuts)
- Contact finsh according to performance class 2 (standard) or class 1

## Specifications

| | |
|---|---|
| Temperature Range Per DIN IEC 68 Part 1 | −55°C to 125°C |

## Materials and Finishes

| Description | Material | Finish |
|---|---|---|
| Shell | Steel | Tin |
| Insulator | Thermoplastic, UL 94V-0 | None |
| Contacts | Copper Alloy | Gold over Nickel |

## Mechanical Data

| | |
|---|---|
| Coupling | Friction, accessories |
| Polarization | Keystone shape of shell |
| Termination | PC tails, straight and 90°<br>Solder cups |

## D*JK Filter Performance

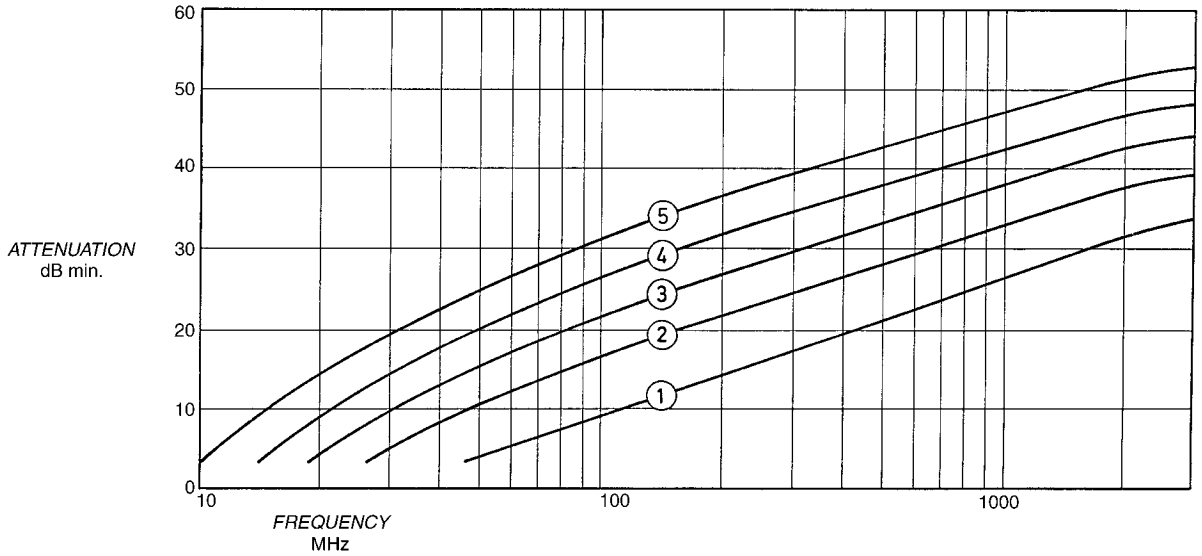


## D*JK Electrical Data

| | |
|---|---|
| Voltage rating (working) | 100 VDC |
| Current rating | 5 A |
| Insulation resistance, electrification time 30 s, temperature 25°C | 5000 MΩ min./100 V |
| Dielectric Withstanding Voltage (Sea Level) 500 micro amps max. charge/discharge | 250 VDC |
| Filter Type C | Capacitor |
| Filter Symbol per DIN | |

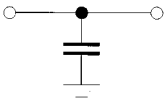

| Filter designation | 5 | 4 | 3 | 2 | 1 |
|---|---|---|---|---|---|
| Capacitance, type at 1 KHz, 0,1 Vrms, 25°C | 1500 pF | 1000 pF | 680 pF | 470 pF | 330 pF |
| Frequency MHz | Attenuation db min. | Attenuation db min. | Attenuation db min. | Attenuation db min. | Attenuation db min. |
| 10 | 3 | — | — | — | — |
| 30 | 20 | 14 | 10 | 7 | 2 |
| 100 | 31 | 27 | 22 | 18 | 9 |
| 300 | 39 | 35 | 30 | 27 | 18 |
| 1000 | 47 | 42 | 37 | 32 | 28 |
| 2000 | 51 | 46 | 42 | 36 | 31 |

Attenuation per MIL-STD-220 at 25°C with no applied voltage or current



Dimensions are shown in mm (inch)
Dimensions subject to change

## D*JT Filter Performance

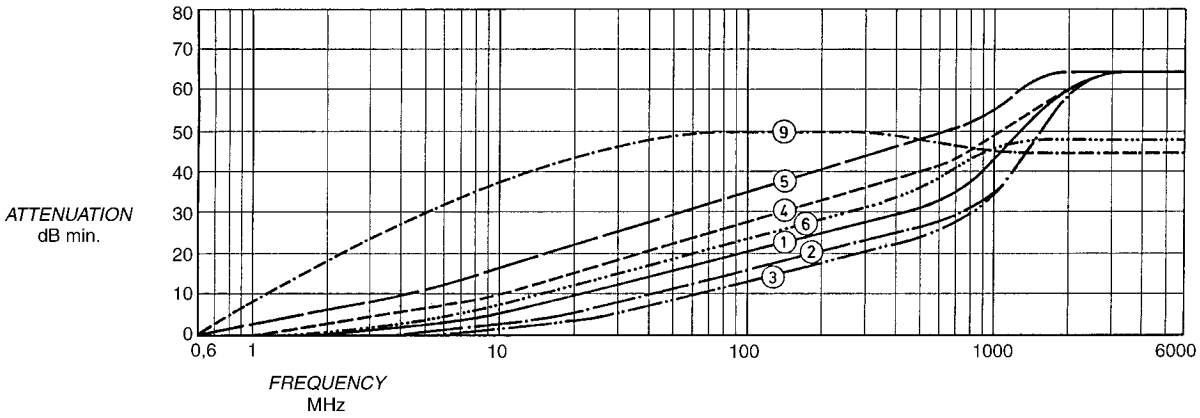


## D*JT Electrical Data

| | |
|---|---|
| Voltage rating (working) | 200 VDC/120 Vrms, 400 Hz |
| Current rating | 5 A (Size 20 contacts), 30 A (Size 8 contacts) |
| Insulation resistance, electrification time 30 s, temperature 25°C | 10,000 MΩ min./100 V |
| Dielectric Withstanding Voltage (Sea Level) 500 micro amps max. charge/discharge | 500 VDC |
| Filter type C | Capacitor |
| Filter symbol per DIN | 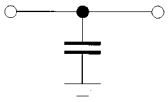 |

| Filter designation | 9 | 5 | 4 | 6 | 1 | 2 | 3 |
|---|---|---|---|---|---|---|---|
| Capacitance, type at 1 KHz, 0,1 Vrms, 25°C | 47000 pF | 5000 pF | 2000 pF | 1500 pF | 1000 pF | 500 pF | 250 pF |
| Frequency MHz | Attenuation db min. | Attenuation db min. | Attenuation db min. | Attenuation db min. | Attenuation db min. | Attenuation db min. | Attenuation db min. |
| 5 | 30 | 11 | 6 | 3 | — | — | — |
| 10 | 37 | 16 | 10 | 7 | 5 | 2 | 1 |
| 100 | 50 | 35 | 27 | 23 | 20 | 16 | 14 |
| 1000 | 45 | 54 | 48 | 46 | 42 | 37 | 35 |
| 2000 | — | 64 | 60 | — | 60 | 60 | 60 |
| 5000 | — | 64 | 64 | — | 64 | 64 | 64 |

Attenuation per MIL-STD-220 at 25°C with no applied voltage or current

## D*JK — 90° PC Tails — Standard Footprint .318♦ or .283 inch ♦♦

Plug

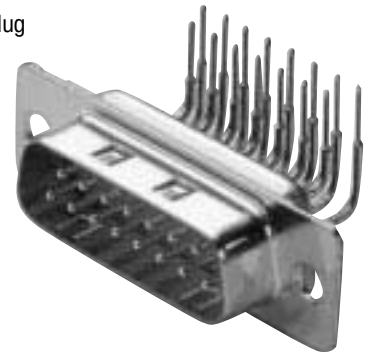

Reader's Resource
For contact cavity arrangements, see page 224.
For P.C. hole patterns, see page 272.
For panel cutouts, see page 221.
For hardware views (European), see page 227.

Part Numbers

| Shell Size | Layout | Through Hole | Clinch Nut #4-40 UNC |
|---|---|---|---|
| DE | 9 | DEJK9P*-1U0N | DEJKE9P*-1U0N |
| DA | 15 | DAJK15P*-1U0N | DAJKE15P*-1U0N |
| DB | 25 | DBJK25P*-1U0N | DBJKE25P*-1U0N |
| DC | 37 | DCJK37P*-1U0N | DCJKE37P*-1U0N |

* Insert filter designator. Example: DEJK9P4-1U0N (For 1000 pF Filter Capacitance)
Note: For performance class 1 add -A190. Example: DEJK9P1-1U0N-A190

| Filter Designator* | Filter Capacitance |
|---|---|
| 1 | 330 pF |
| 2 | 470 pF |
| 3 | 680 pF |
| 4 | 1000 pF |
| 5 | 1500 pF |

For electrical data, see page 106.

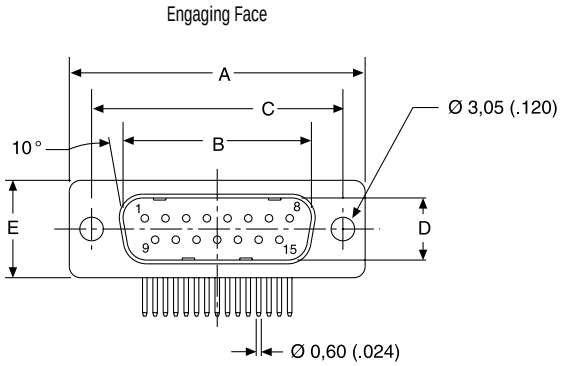


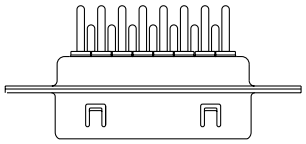

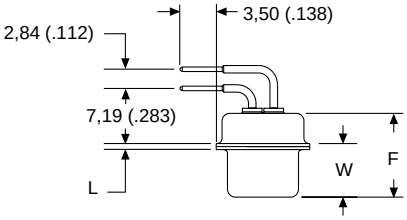


Dimensions

| Shell Size | A ±0,38 (.015) | B ±0,13 (.005) | C ±0,13 (.005) | D ±0,13 (.005) | E ±0,38 (.015) | F ±0,25 (.010) | W ±0,37 (.015) | W ±0,41 (.016) | L ±0,25 (.010) |
|---|---|---|---|---|---|---|---|---|---|
| DE | 30,81 (1.213) | 16,92 (.666) | 24,99 (.984) | 8,36 (.329) | 12,55 (.494) | 10,72 (.422) | 6,69 (.264) | — | 0,76 (.030) |
| DA | 39,14 (1.541) | 25,25 (.994) | 33,32 (1.312) | 8,36 (.329) | 12,55 (.494) | 10,72 (.422) | 6,69 (.264) | — | 0,76 (.030) |
| DB | 53,04 (2.088) | 38,96 (1.534) | 47,04 (1.852) | 8,36 (.329) | 12,55 (.494) | 10,72 (.422) | — | 6,84 (.269) | 0,99 (.039) |
| DC | 69,32 (2.729) | 55,42 (2.182) | 63,50 (2.500) | 8,36 (.329) | 12,55 (.494) | 10,72 (.422) | — | 6,84 (.269) | 0,99 (.039) |

♦ Connector footprint measured from the front shell.
♦♦ Connector footprint measured from the rear shell.



Dimensions are shown in mm (inch)
Dimensions subject to change

## D*JK — 90° PC Tails — Standard Footprint .318♦ or .283 inch ♦♦

Receptacle

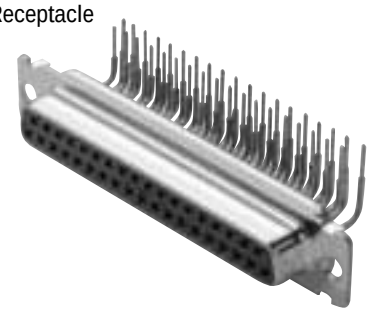

Reader's Resource

For contact cavity arrangements, see page 224.
For P.C. hole patterns, see page 272.
For panel cutouts, see page 221.
For hardware views (European), see page 227.

Part Numbers

| Shell Size | Layout | Through Hole | Clinch Nut #4-40 UNC |
|---|---|---|---|
| DE | 9 | DEJK9S*-1U0N | DEJKE9S*-1U0N |
| DA | 15 | DAJK15S*-1U0N | DAJKE15S*-1U0N |
| DB | 25 | DBJK25S*-1U0N | DBJKE25S*-1U0N |
| DC | 37 | DCJK37S*-1U0N | DCJKE37S*-1U0N |

* Insert filter designator. Example: DEJK9S4-1U0N (for 1000 pF Filter Capacitance)
Note: For performance class 1, add -A190. Example: DEJK9S1-1U0N-A190

| Filter Designator* | Filter Capacitance |
|---|---|
| 1 | 330 pF |
| 2 | 470 pF |
| 3 | 680 pF |
| 4 | 1000 pF |
| 5 | 1500 pF |

For electrical data, see page 106.

Engaging Face

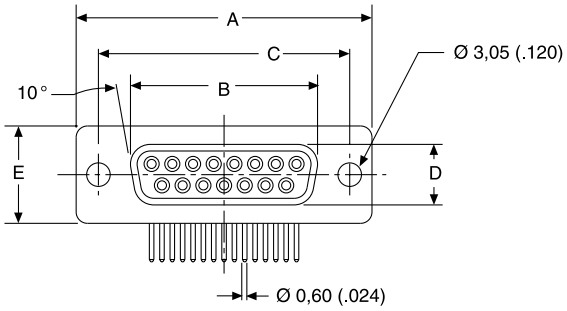


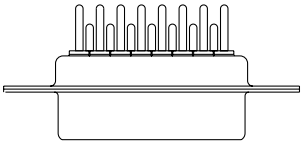

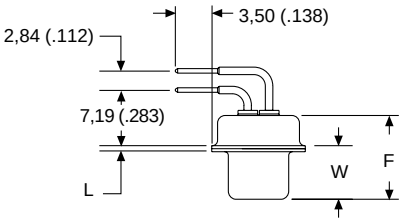


Dimensions

| Shell Size | A ±0,38 (.015) | B ±0,13 (.005) | C ±0,13 (.005) | D ±0,13 (.005) | E ±0,38 (.015) | F ±0,25 (.010) | W ±0,38 (.015) | L ±0,25 (.010) |
|---|---|---|---|---|---|---|---|---|
| DE | 30,81 (1.213) | 16,33 (.643) | 24,99 (.984) | 7,90 (.311) | 12,55 (.494) | 10,90 (.429) | 6,94 (.273) | 0,76 (.030) |
| DA | 39,14 (1.541) | 24,66 (.971) | 33,32 (1.312) | 7,90 (.311) | 12,55 (.494) | 10,90 (.429) | 6,94 (.273) | 0,76 (.030) |
| DB | 53,04 (2.088) | 38,38 (1.511) | 47,04 (1.852) | 7,90 (.311) | 12,55 (.494) | 10,90 (.429) | 6,94 (.273) | 0,76 (.030) |
| DC | 69,32 (2.729) | 54,84 (2.159) | 63,50 (2.500) | 7,90 (.311) | 12,55 (.494) | 10,90 (.429) | 6,94 (.273) | 0,76 (.030) |

♦ Connector footprint measured from the front shell.
♦ ♦ Connector footprint measured from the rear shell.

## D*JK — 90° PC Tails — European Footprint 10,2♦ or 9,4 mm♦♦

Plug

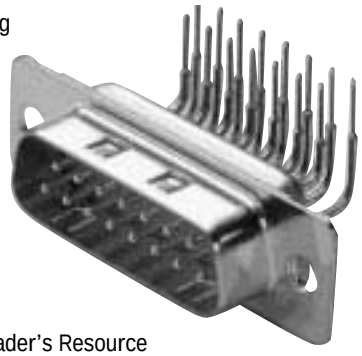

Reader's Resource

For contact cavity arrangements, see page 224.
For P.C. hole patterns, see page 273.
For panel cutouts, see page 221.
For hardware options (European), see page 227.

Part Numbers

| Shell Size | Layout | Through Hole | Clinch Nut #4-40 UNC | Clinch Nut M3 |
|---|---|---|---|---|
| DE | 9 | DEJK9P*-1A0N | DEJKE9P*-1A0N | DEJKX9P*-1A0N |
| DA | 15 | DAJK15P*-1A0N | DAJKE15P*-1A0N | DAJKX15P*-1A0N |
| DB | 25 | DBJK25P*-1A0N | DBJKE25P*-1A0N | DBJKX25P*-1A0N |
| DC | 37 | DCJK37P*-1A0N | DCJKE37P*-1A0N | DCJKX37P*-1A0N |

* Insert filter designator. Example: DEJK9P4-1A0N (For 1000 pF Filter Capacitance)
Modifier: For performance class 1 add -A190. Example: DEJK9P1-1A0N-A190

| Filter Designator* | Filter Capacitance |
|---|---|
| 1 | 330 pF |
| 2 | 470 pF |
| 3 | 680 pF |
| 4 | 1000 pF |
| 5 | 1500 pF |

For electrical data, see page 106.

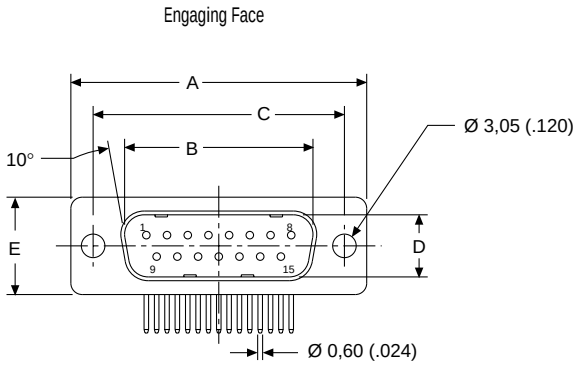


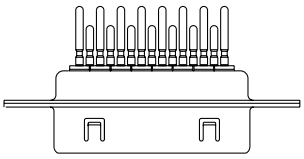

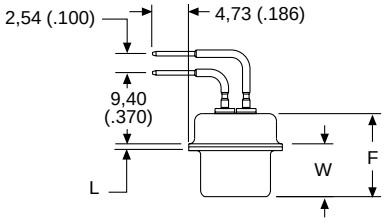


Dimensions

| Shell Size | A ±0,38 (.015) | B ±0,13 (.005) | C ±0,13 (.005) | D ±0,13 (.005) | E ±0,38 (.015) | F ±0,25 (.010) | W ±0,37 (.015) | W ±0,41 (.016) | L ±0,25 (.010) |
|---|---|---|---|---|---|---|---|---|---|
| DE | 30,81 (1.213) | 16,92 (.666) | 24,99 (.984) | 8,36 (.329) | 12,55 (.494) | 10,72 (.422) | 6,69 (.264) | — | 0,76 (.030) |
| DA | 39,14 (1.541) | 25,25 (.994) | 33,32 (1.312) | 8,36 (.329) | 12,55 (.494) | 10,72 (.422) | 6,69 (.264) | — | 0,76 (.030) |
| DB | 53,04 (2.088) | 38,96 (1.534) | 47,04 (1.852) | 8,36 (.329) | 12,55 (.494) | 10,72 (.422) | — | 6,84 (.269) | 0,99 (.039) |
| DC | 69,32 (2.729) | 55,42 (2.182) | 63,50 (2.500) | 8,36 (.329) | 12,55 (.494) | 10,72 (.422) | — | 6,84 (.269) | 0,99 (.039) |

♦ Connector footprint measured from the front shell.
♦♦ Connector footprint measured from the rear shell.



Dimensions are shown in mm (inch)
Dimensions subject to change

## D*JK — 90° PC Tails — European Footprint 10,2♦ or 9,4 mm♦♦

Receptacle

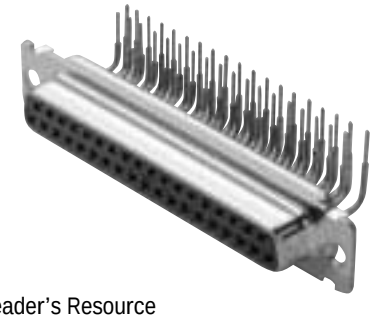

Reader's Resource

For contact cavity arrangements, see page 224.
For P.C. hole patterns, see page 273.
For panel cutouts, see page 221.
For hardware options (European), see page 227.

Part Numbers

| Shell Size | Layout | Through Hole | Clinch Nut #4-40 UNC | Clinch Nut M3 |
|---|---|---|---|---|
| DE | 9 | DEJK9S*-1A0N | DEJKE9S*-1A0N | DEJKX9S*-1A0N |
| DA | 15 | DAJK15S*-1A0N | DAJKE15S*-1A0N | DAJKX15S*-1A0N |
| DB | 25 | DBJK25S*-1A0N | DBJKE25S*-1A0N | DBJKX25S*-1A0N |
| DC | 37 | DCJK37S*-1A0N | DCJKE37S*-1A0N | DCJKX37S*-1A0N |

* Insert filter designator. Example: DEJK9S4-1A0N (for 1000 pF Filter Capacitance)
Note: For performance class 1, add -A190. Example: DEJK9S1-1A0N-A190

| Filter Designator* | Filter Capacitance |
|---|---|
| 1 | 330 pF |
| 2 | 470 pF |
| 3 | 680 pF |
| 4 | 1000 pF |
| 5 | 1500 pF |

For electrical data, see page 106.

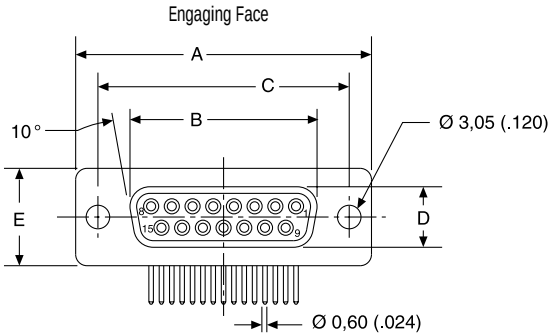


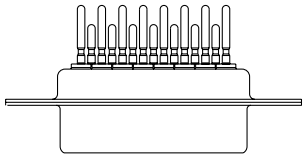

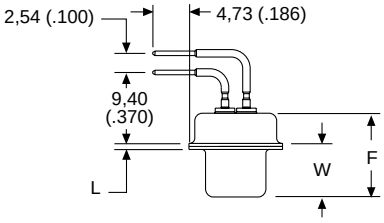


Dimensions

| Shell Size | A ±0,38 (.015) | B ±0,13 (.005) | C ±0,13 (.005) | D ±0,13 (.005) | E ±0,38 (.015) | F ±0,25 (.010) | W ±0,38 (.015) | L ±0,25 (.010) |
|---|---|---|---|---|---|---|---|---|
| DE | 30,81 (1.213) | 16,33 (.643) | 24,99 (.984) | 7,90 (.311) | 12,55 (.494) | 10,90 (.429) | 6,94 (.273) | 0,76 (.030) |
| DA | 39,14 (1.541) | 24,66 (.971) | 33,32 (1.312) | 7,90 (.311) | 12,55 (.494) | 10,90 (.429) | 6,94 (.273) | 0,76 (.030) |
| DB | 53,04 (2.088) | 38,38 (1.511) | 47,04 (1.852) | 7,90 (.311) | 12,55 (.494) | 10,90 (.429) | 6,94 (.273) | 0,76 (.030) |
| DC | 69,32 (2.729) | 54,84 (2.159) | 63,50 (2.500) | 7,90 (.311) | 12,55 (.494) | 10,90 (.429) | 6,94 (.273) | 0,76 (.030) |

♦ Connector footprint measured from the front shell.
♦♦ Connector footprint measured from the rear shell.

## D*JK — 90° PC Tails and Metal Brackets — Standard Footprint .318♦ or .283 inch♦♦

### Plug

Reader's Resource
For contact cavity arrangements, see page 224.
For P.C. hole patterns, see page 273.
For panel cutouts, see page 221.
For hardware views (European), see page 227.
For alternate bracket configuration (when connectors are supplied without boardlocks), see page 226.
For pushfit/boardlock configuration, see page 225.

### Part Numbers

| Shell Size | Layout | Bracket, #4-40 Nut | Bracket, #4-40 Nut, Boardlock |
|---|---|---|---|
| DE | 9 | DEJK9P*-1U7N | DEJK9P*-1U7N-146 |
| DA | 15 | DAJK15P*-1U7N | DAJK15P*-1U7N-146 |
| DB | 25 | DBJK25P*-1U7N | DBJK25P*-1U7N-146 |
| DC | 37 | DCJK37P*-1U7N | DCJK37P*-1U7N-146 |

Insert filter designator *. Example: DEJK9P4-1U7N-146 (For 1000 pF Filter Capacitance)
Note: For performance class 1, add -A190. Example: DEJK9P4-1U7N-A190-146

| Filter Designator* | Filter Capacitance |
|---|---|
| 1 | 330 pF |
| 2 | 470 pF |
| 3 | 680 pF |
| 4 | 1000 pF |
| 5 | 1500 pF |

For electrical data, see page 106.

Engaging Face

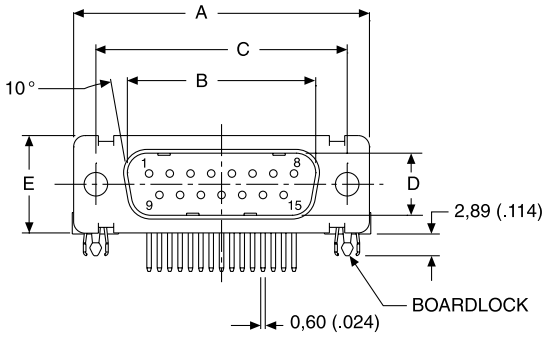


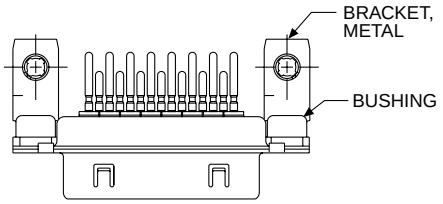


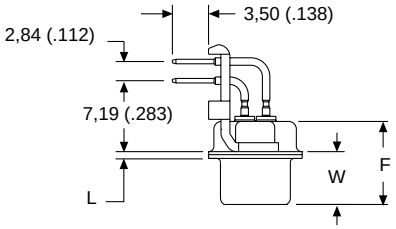


Boardlock removed for clarity

### Dimensions

| Shell Size | A ±0,38 (.015) | B ±0,13 (.005) | C ±0,13 (.005) | D ±0,13 (.005) | E ±0,38 (.015) | F ±0,25 (.010) | W ±0,368 (.0145) | W ±0,41 (.016) | L ±0,25 (.010) |
|---|---|---|---|---|---|---|---|---|---|
| DE | 30,81 (1.213) | 16,92 (.666) | 24,99 (.984) | 8,36 (.329) | 12,55 (.494) | 10,72 (.422) | 6,693 (.2635) | — | 0,76 (.030) |
| DA | 39,14 (1.541) | 25,25 (.994) | 33,32 (1.312) | 8,36 (.329) | 12,55 (.494) | 10,72 (.422) | 6,693 (.2635) | — | 0,76 (.030) |
| DB | 53,04 (2.088) | 38,96 (1.534) | 47,04 (1.852) | 8,36 (.329) | 12,55 (.494) | 10,82 (.426) | — | 6,84 (.269) | 0,99 (.039) |
| DC | 69,32 (2.729) | 55,42 (2.182) | 63,50 (2.500) | 8,36 (.329) | 12,55 (.494) | 10,82 (.426) | — | 6,84 (.269) | 0,99 (.039) |

♦ Connector footprint measured from the front shell.
♦♦ Connector footprint measured from the rear shell.



Dimensions are shown in mm (inch)
Dimensions subject to change

## D*JK — 90° PC Tails and Metal Brackets — Standard Footprint .318♦ or .283 inch♦♦

Receptacle

Reader's Resource
For contact cavity arrangements, see page 224.
For P.C. hole patterns, see page 273.
For panel cutouts, see page 221.
For hardware views (European), see page 227.
For alternate bracket configuration (when connectors are supplied without boardlocks), see page 226.
For pushfit/boardlock configuration, see page 225.

Part Numbers

| Shell Size | Layout | Bracket, #4-40 Nut | Bracket, #4-40 Nut, Boardlock |
|---|---|---|---|
| DE | 9 | DEJK9S*-1U7N | DEJK9S*-1U7N-146 |
| DA | 15 | DAJK15S*-1U7N | DAJK15S*-1U7N-146 |
| DB | 25 | DBJK25S*-1U7N | DBJK25S*-1U7N-146 |
| DC | 37 | DCJK37S*-1U7N | DCJK37S*-1U7N-146 |

Insert filter designator *. Example DEJK9S4-1U7N-146 (For 1000 pF Filter Capacitance)
Note: For performance class 1, add -A190. Example: DEJK9S4-1U7N-A190-146

| Filter Designator* | Filter Capacitance |
|---|---|
| 1 | 330 pF |
| 2 | 470 pF |
| 3 | 680 pF |
| 4 | 1000 pF |
| 5 | 1500 pF |

For electrical data, see page 106.

Engaging Face

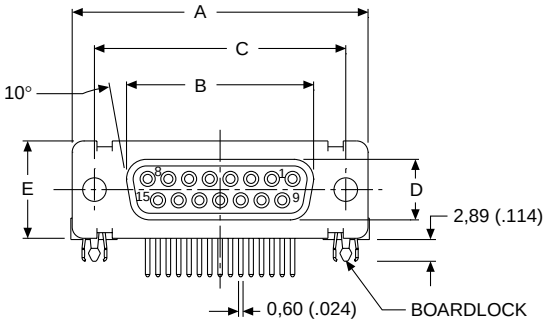


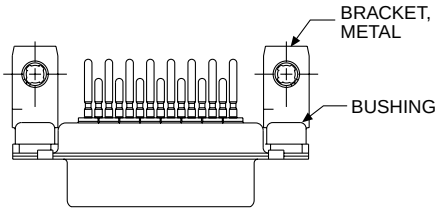


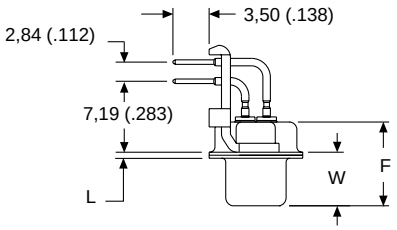


Boardlock removed for clarity

Dimensions

| Shell Size | A ±0,38 (.015) | B ±0,13 (.005) | C ±0,13 (.005) | D ±0,13 (.005) | E ±0,38 (.015) | F ±0,25 (.010) | W ±0,38 (.015) | L ±0,25 (.010) |
|---|---|---|---|---|---|---|---|---|
| DE | 30,81 (1.213) | 16,33 (.643) | 24,99 (.984) | 7,90 (.311) | 12,55 (.494) | 10,90 (.429) | 6,94 (.273) | 0,76 (.030) |
| DA | 39,14 (1.541) | 24,66 (.971) | 33,32 (1.312) | 7,90 (.311) | 12,55 (.494) | 10,90 (.429) | 6,94 (.273) | 0,76 (.030) |
| DB | 53,04 (2.088) | 38,38 (1.511) | 47,04 (1.852) | 7,90 (.311) | 12,55 (.494) | 10,90 (.429) | 6,94 (.273) | 0,76 (.030) |
| DC | 69,32 (2.729) | 54,84 (2.159) | 63,50 (2.500) | 7,90 (.311) | 12,55 (.494) | 10,90 (.429) | 6,94 (.273) | 0,76 (.030) |

♦ Connector footprint measured from the front shell.
♦♦ Connector footprint measured from the rear shell.

## D*JK — 90° PC Tails and Metal Brackets — European Footprint 10,2♦ or 9,4 mm♦♦

Plug

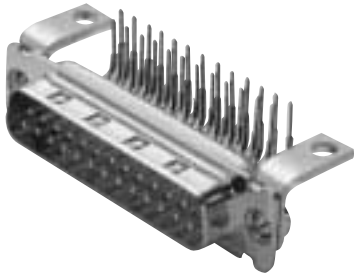

Reader's Resource

For contact cavity arrangements, see page 224.
For P.C. hole patterns, see page 273.
For panel cutouts, see page 221.
For hardware views (European), see page 227.
For alternate bracket configuration (when connectors are supplied without boardlocks), see page 226.
For pushfit/boardlock configuration, see page 225.

Part Numbers

| Bushing with Through Hole | Captive Nut #4-40 UNC | Captive Nut M3 | Post #4-40 UNC | Post M3 |
|---|---|---|---|---|
| DEJK9P*-1AFN | DEJK9P*-1A7N | DEJK9P*-1A9N | DEJK9P*-1A8N | DEJK9P*-1AHN |
| DAJK15P*-1AFN | DAJK15P*-1A7N | DAJK15P*-1A9N | DAJK15P*-1A8N | DAJK15P*-1AHN |
| DBJK25P*-1AFN | DBJK25P*-1A7N | DBJK25P*-1A9N | DBJK25P*-1A8N | DBJK25P*-1AHN |
| DCJK37P*-1AFN | DCJK37P*-1A7N | DCJK37P*-1A9N | DCJK37P*-1A8N | DCJK37P*-1AHN |

* Insert filter designator. Example: DEJK9P4-1A7N (For 1000 pF capacitance)
Notes: For performance class 1 add -A190. Example: DEJK9P1-1AFN-A190
For pushfit/boardlocks add -146. Example: DEJK9P1-1AFN-A190-146

| Filter Designator* | Filter Capacitance |
|---|---|
| 1 | 330 pF |
| 2 | 470 pF |
| 3 | 680 pF |
| 4 | 1000 pF |
| 5 | 1500 pF |

For electrical data, see page 106.

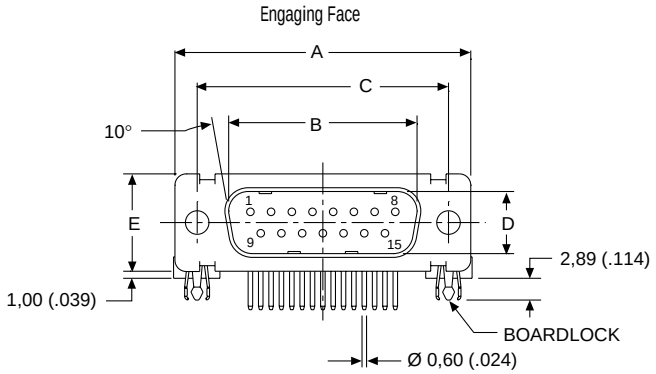


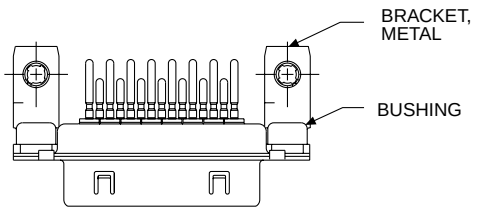


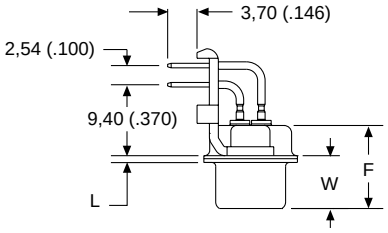


Boardlock removed for clarity

Dimensions

| Shell Size | A ±0,38 (.015) | B ±0,13 (.005) | C ±0,13 (.005) | D ±0,13 (.005) | E ±0,38 (.015) | F ±0,25 (.010) | W ±0,368 (.0145) | W ±0,41 (.016) | L ±0,25 (.010) |
|---|---|---|---|---|---|---|---|---|---|
| DE | 30,81 (1.213) | 16,92 (.666) | 24,99 (.984) | 8,36 (.329) | 12,55 (.494) | 10,72 (.422) | 6,693 (.2635) | — | 0,76 (.030) |
| DA | 39,14 (1.541) | 25,25 (.994) | 33,32 (1.312) | 8,36 (.329) | 12,55 (.494) | 10,72 (.422) | 6,693 (.2635) | — | 0,76 (.030) |
| DB | 53,04 (2.088) | 38,96 (1.534) | 47,04 (1.852) | 8,36 (.329) | 12,55 (.494) | 10,82 (.426) | — | 6,84 (.269) | 0,99 (.039) |
| DC | 69,32 (2.729) | 55,42 (2.182) | 63,50 (2.500) | 8,36 (.329) | 12,55 (.494) | 10,82 (.426) | — | 6,84 (.269) | 0,99 (.039) |

♦ Connector footprint measured from the front shell.
♦♦ Connector footprint measured from the rear shell.



Dimensions are shown in mm (inch)
Dimensions subject to change

## D*JK — 90° PC Tails and Metal Brackets — European Footprint 10,2♦ or 9,4 mm♦♦

Receptacle

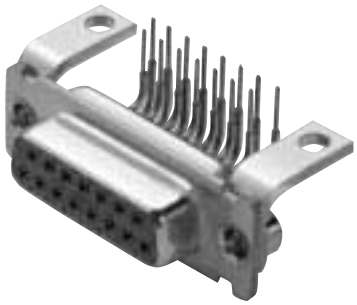

Reader's Resource

For contact cavity arrangements, see page 224.
For P.C. hole patterns, see page 273.
For panel cutouts, see page 221.
For hardware views (European), see page 227.
For alternate bracket configuration (when connectors are supplied without boardlocks), see page 226.
For pushfit/boardlock configuration, see page 225.

Part Numbers

| Bushing with Through Hole | Captive Nut #4-40 UNC | Captive Nut M3 | Post #4-40 UNC | Post M3 |
|---|---|---|---|---|
| DEJK9S*-1AFN | DEJK9S*-1A7N | DEJK9S*-1A9N | DEJK9S*-1A8N | DEJK9S*-1AHN |
| DAJK15S*-1AFN | DAJK15S*-1A7N | DAJK15S*-1A9N | DAJK15S*-1A8N | DAJK15S*-1AHN |
| DBJK25S*-1AFN | DBJK25S*-1A7N | DBJK25S*-1A9N | DBJK25S*-1A8N | DBJK25S*-1AHN |
| DCJK37S*-1AFN | DCJK37S*-1A7N | DCJK37S*-1A9N | DCJK37S*-1A8N | DCJK37S*-1AHN |

* Insert filter designator. Example: DEJK9S4-1A7N (For 1000 pF capacitance)
Notes: For performance class 1 add -A190. Example: DEJK9S1-1AFN-A190
For pushfit/boardlocks add -146. Example: DEJK9S1-1AFN-A190-146

| Filter Designator* | Filter Capacitance |
|---|---|
| 1 | 330 pF |
| 2 | 470 pF |
| 3 | 680 pF |
| 4 | 1000 pF |
| 5 | 1500 pF |

For electrical data, see page 106.

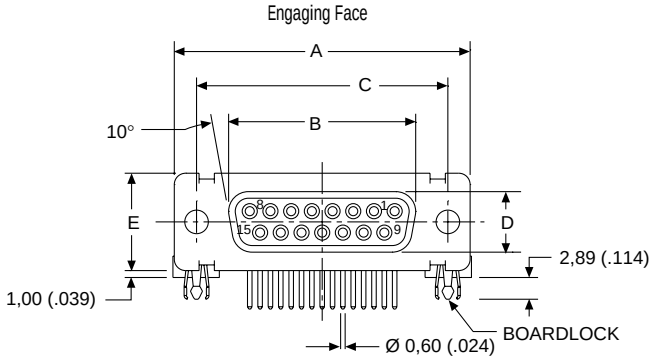


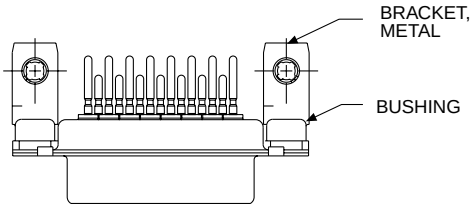


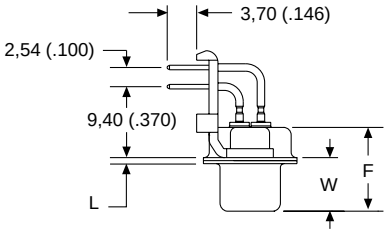


Boardlock removed for clarity

Dimensions

| Shell Size | A ±0,38 (.015) | B ±0,13 (.005) | C ±0,13 (.005) | D ±0,13 (.005) | E ±0,38 (.015) | F ±0,25 (.010) | W ±0,38 (.015) | K ±0,318 (.0125) | L ±0,25 (.010) |
|---|---|---|---|---|---|---|---|---|---|
| DE | 30,81 (1.213) | 16,33 (.643) | 24,99 (.984) | 7,90 (.311) | 12,55 (.494) | 10,90 (.429) | 6,94 (.273) | 1,206 (.0475) | 0,76 (.030) |
| DA | 39,14 (1.541) | 24,66 (.971) | 33,32 (1.312) | 7,90 (.311) | 12,55 (.494) | 10,90 (.429) | 6,94 (.273) | 1,206 (.0475) | 0,76 (.030) |
| DB | 53,04 (2.088) | 38,38 (1.511) | 47,04 (1.852) | 7,90 (.311) | 12,55 (.494) | 10,90 (.429) | 6,94 (.273) | 1,206 (.0475) | 0,76 (.030) |
| DC | 69,32 (2.729) | 54,84 (2.159) | 63,50 (2.500) | 7,90 (.311) | 12,55 (.494) | 10,90 (.429) | 6,94 (.273) | 1,206 (.0475) | 0,76 (.030) |

♦ Connector footprint measured from the front shell.
♦♦ Connector footprint measured from the rear shell.

## D*JK — 90° PC Tails & Plastic Brackets with Grounding Straps — European Footprint 10,2♦ or 9,4 mm♦♦

Plug

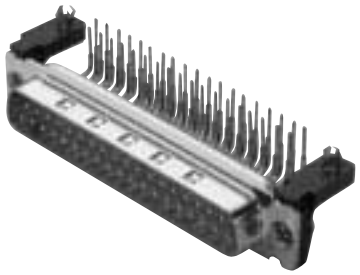

Reader's Resource

For contact cavity arrangements, see page 224.
For P.C. hole patterns, see page 273.
For panel cutouts, see page 221.
For hardware views (European), see page 227.
For pushfit/boardlock configuration, see page 225.

Part Numbers

| Bushing with Through Hole | Captive Nut #4-40 UNC | Captive Nut M3 | Post #4-40 UNC | Post M3 |
|---|---|---|---|---|
| DEJK9P*-1ADN | DEJK9P*-1AWN | DEJK9P*-1AVN | DEJK9P*-1AJN | DEJK9P*-1AGN |
| DAJK15P*-1ADN | DAJK15P*-1AWN | DAJK15P*-1AVN | DAJK15P*-1AJN | DAJK15P*-1AGN |
| DBJK25P*-1ADN | DBJK25P*-1AWN | DBJK25P*-1AVN | DBJK25P*-1AJN | DBJK25P*-1AGN |
| DCJK37P*-1ADN | DCJK37P*-1AWN | DCJK37P*-1AVN | DCJK37P*-1AJN | DCJK37P*-1AGN |

* Insert filter designator. Example: DEJK9P4-1AWN (For 1000 pF capacitance)
Notes: For performance class 1 add -A190. Example: DEJK9P1-1ADN-A190
For pushfit/boardlocks add -146. Example: DEJK9P1-1ADN-A190-146

| Filter Designator* | Filter Capacitance |
|---|---|
| 1 | 330 pF |
| 2 | 470 pF |
| 3 | 680 pF |
| 4 | 1000 pF |
| 5 | 1500 pF |

For electrical data, see page 106.

Engaging Face

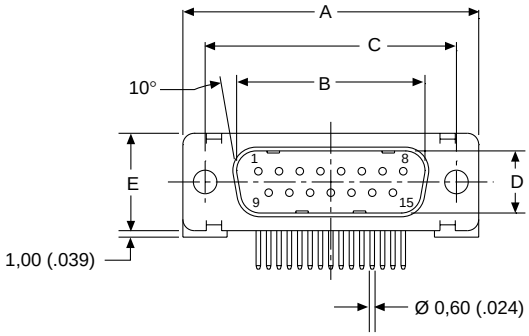


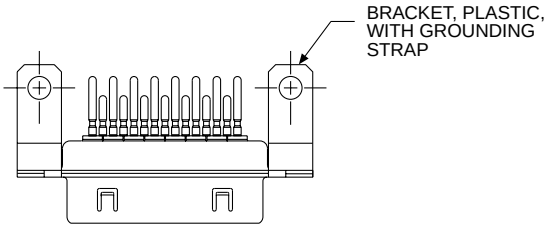


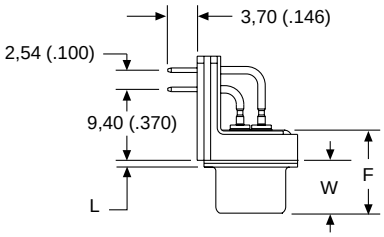


Dimensions

| Shell Size | A ±0,38 (.015) | B ±0,13 (.005) | C ±0,13 (.005) | D ±0,13 (.005) | E ±0,38 (.015) | F ±0,25 (.010) | W ±0,368 (.0145) | W ±0,41 (.016) | L ±0,25 (.010) |
|---|---|---|---|---|---|---|---|---|---|
| DE | 30,81 (1.213) | 16,92 (.666) | 24,99 (.984) | 8,36 (.329) | 12,55 (.494) | 10,72 (.422) | 6,693 (.2635) | — | 0,76 (.030) |
| DA | 39,14 (1.541) | 25,25 (.994) | 33,32 (1.312) | 8,36 (.329) | 12,55 (.494) | 10,72 (.422) | 6,693 (.2635) | — | 0,76 (.030) |
| DB | 53,04 (2.088) | 38,96 (1.534) | 47,04 (1.852) | 8,36 (.329) | 12,55 (.494) | 10,82 (.426) | — | 6,84 (.269) | 0,99 (.039) |
| DC | 69,32 (2.729) | 55,42 (2.182) | 63,50 (2.500) | 8,36 (.329) | 12,55 (.494) | 10,82 (.426) | — | 6,84 (.269) | 0,99 (.039) |

♦ Connector footprint measured from the front shell.
♦♦ Connector footprint measured from the rear shell.



Dimensions are shown in mm (inch)
Dimensions subject to change

## D*JK — 90° PC Tails & Plastic Brackets with Grounding Straps — European Footprint 10,2♦ or 9,4 mm♦♦

Receptacle

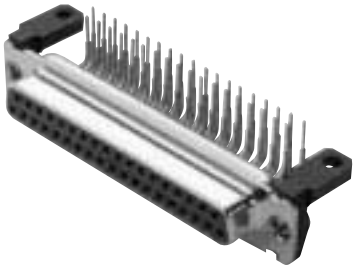

Part Numbers

| Bushing with Through Hole | Captive Nut #4-40 UNC | Captive Nut M3 | Post #4-40 UNC | Post M3 |
|---|---|---|---|---|
| DEJK9S*-1ADN | DEJK9S*-1AWN | DEJK9S*-1AVN | DEJK9S*-1AJN | DEJK9S*-1AGN |
| DAJK15S*-1ADN | DAJK15S*-1AWN | DAJK15S*-1AVN | DAJK15S*-1AJN | DAJK15S*-1AGN |
| DBJK25S*-1ADN | DBJK25S*-1AWN | DBJK25S*-1AVN | DBJK25S*-1AJN | DBJK25S*-1AGN |
| DCJK37S*-1ADN | DCJK37S*-1AWN | DCJK37S*-1AVN | DCJK37S*-1AJN | DCJK37S*-1AGN |

* Insert filter designator. Example: DEJK9S4-1AWN (For 1000 pF capacitance)
Notes: For performance class 1 add -A190. Example: DEJKS1-1ADN-A190
For pushfit/boardlocks add -146. Example: DEJK9P1-1ADN-A190-146

Reader's Resource
For contact cavity arrangements, see page 224.
For P.C. hole patterns, see page 273.
For panel cutouts, see page 221.
For hardware views (European), see page 227.
For pushfit/boardlock configuration, see page 225.

| Filter Desginator* | Filter Capacitance |
|---|---|
| 1 | 330 pF |
| 2 | 470 pF |
| 3 | 680 pF |
| 4 | 1000 pF |
| 5 | 1500 pF |

For electrical data, see page 106.

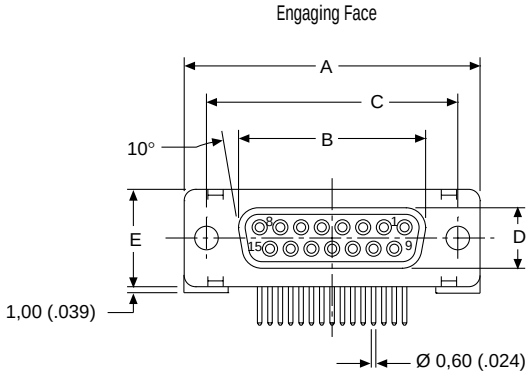


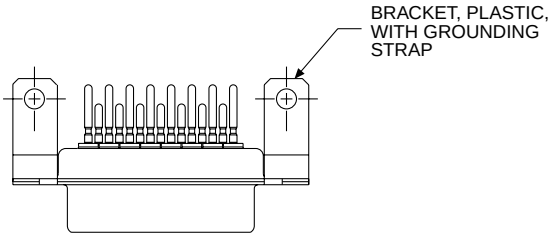


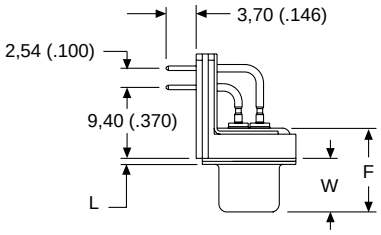


Dimensions

| Shell Size | A ±0,38 (.015) | B ±0,13 (.005) | C ±0,13 (.005) | D ±0,13 (.005) | E ±0,38 (.015) | F ±0,25 (.010) | W ±0,38 (.015) | L ±0,25 (.010) |
|---|---|---|---|---|---|---|---|---|
| DE | 30,81 (1.213) | 16,33 (.643) | 24,99 (.984) | 7,90 (.311) | 12,55 (.494) | 10,90 (.429) | 6,94 (.273) | 0,76 (.030) |
| DA | 39,14 (1.541) | 24,66 (.971) | 33,32 (1.312) | 7,90 (.311) | 12,55 (.494) | 10,90 (.429) | 6,94 (.273) | 0,76 (.030) |
| DB | 53,04 (2.088) | 38,38 (1.511) | 47,04 (1.852) | 7,90 (.311) | 12,55 (.494) | 10,90 (.429) | 6,94 (.273) | 0,76 (.030) |
| DC | 69,32 (2.729) | 54,84 (2.159) | 63,50 (2.500) | 7,90 (.311) | 12,55 (.494) | 10,90 (.429) | 6,94 (.273) | 0,76 (.030) |

♦ Connector footprint measured from the front shell.
♦♦ Connector footprint measured from the rear shell.

## D*JK — 90° PC Tails & Plastic Brackets — European Footprint 10,2♦ or 9,4 mm♦♦

Plug

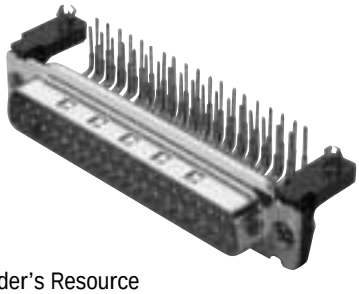

Reader's Resource

For contact cavity arrangements, see page 224.
For P.C. hole patterns, see page 273.
For panel cutouts, see page 221.
For hardware views (European), see page 227.
For pushfit/boardlock configuration, see page 225.

Part Numbers

| Bushing with Through Hole | Captive Nut #4-40 UNC | Captive Nut M3 | Post #4-40 UNC | Post M3 |
|---|---|---|---|---|
| DEJK9P*-1A5N | DEJK9P*-1AUN | DEJK9P*-1ATN | DEJK9P*-1A6N | DEJK9P*-1APN |
| DAJK15P*-1A5N | DAJK15P*-1AUN | DAJK15P*-1ATN | DAJK15P*-1A6N | DAJK15P*-1APN |
| DBJK25P*-1A5N | DBJK25P*-1AUN | DBJK25P*-1ATN | DBJK25P*-1A6N | DBJK25P*-1APN |
| DCJK37P*-1A5N | DCJK37P*-1AUN | DCJK37P*-1ATN | DCJK37P*-1A6N | DCJK37P*-1APN |

* Insert filter designator. Example: DEJK9P4-1A5N (For 1000 pF filter capacitance)
Notes: For performance class 1 add -A190. Example: DEJK9P1-1A5N-A190
For pushfit/boardlocks add-146. Example: DEJK9P1-1A5N-A190-146

| Filter Designator* | Filter Capacitance |
|---|---|
| 1 | 330 pF |
| 2 | 470 pF |
| 3 | 680 pF |
| 4 | 1000 pF |
| 5 | 1500 pF |

For electrical data, see page 106.

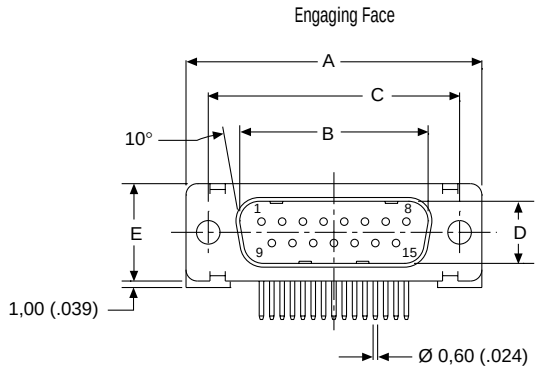


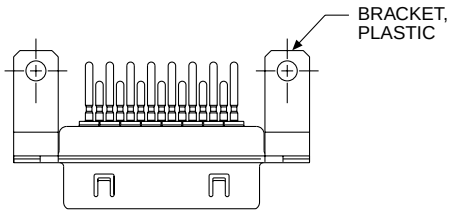


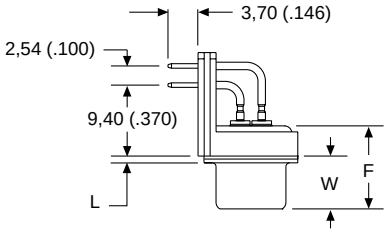


Dimensions

| Shell Size | A ±0,38 (.015) | B ±0,13 (.005) | C ±0,13 (.005) | D ±0.13 (.005) | E ±0,38 (.015) | F ±0,25 (.010) | W ±0,37 (.015) | W ±0,41 (.016) | L ±0,25 (.010) |
|---|---|---|---|---|---|---|---|---|---|
| DE | 30,81 (1.213) | 16,92 (.666) | 24,99 (.984) | 8,36 (.329) | 12,55 (.494) | 10,72 (.422) | 6,69 (.264) | — | 0,76 (.030) |
| DA | 39,14 (1.541) | 25,25 (.994) | 33,32 (1.312) | 8,36 (.329) | 12,55 (.494) | 10,72 (.422) | 6,69 (.264) | — | 0,76 (.030) |
| DB | 53,04 (2.088) | 38,96 (1.534) | 47,04 (1.852) | 8,36 (.329) | 12,55 (.494) | 10,82 (.426) | — | 6,84 (.269) | 0,99 (.039) |
| DC | 69,32 (2.729) | 55,42 (2.182) | 63,50 (2.500) | 8,36 (.329) | 12,55 (.494) | 10,82 (.426) | — | 6,84 (.269) | 0,99 (.039) |

♦ Connector footprint measured from the front shell.
♦♦ Connector footprint measured from the rear shell.



Dimensions are shown in mm (inch)
Dimensions subject to change

## D*JK — 90° PC Tails and Plastic Brackets — European Footprint 10,2♦ or 9,4 mm♦♦

Receptacle

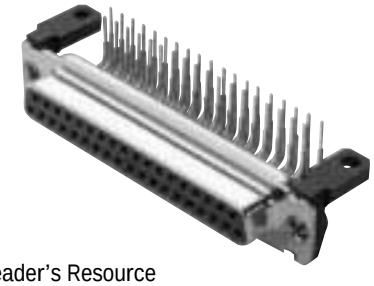

Reader's Resource

For contact cavity arrangements, see page 224.
For P.C. hole patterns, see page 273.
For panel cutouts, see page 221.
For hardware views (European), see page 227.
For pushfit/boardlock configuration, see page 225.

Part Numbers

| Bushing with Through Hole | Captive Nut #4-40 UNC | Captive Nut M3 | Post #4-40 UNC | Post M3 |
|---|---|---|---|---|
| DEJK9S*-1A5N | DEJK9S*-1AUN | DEJK9S*-1ATN | DEJK9S*-1A6N | DEJK9S*-1APN |
| DAJK15S*-1A5N | DAJK15S*-1AUN | DAJK15S*-1ATN | DAJK15S*-1A6N | DAJK15S*-1APN |
| DBJK25S*-1A5N | DBJK25S*-1AUN | DBJK25S*-1ATN | DBJK25S*-1A6N | DBJK25S*-1APN |
| DCJK37S*-1A5N | DCJK37S*-1AUN | DCJK37S*-1ATN | DCJK37S*-1A6N | DCJK37S*-1APN |

* Insert filter designator. Example: DEJK9S4-1A5N (for 1000 pF filter capacitance)
Notes: For performance class 1 add -A190. Example: DEJK9S1-1A5N-A190
For pushfit/boardlocks add -146. Example: DEJK9S1-1A5N-A190-146

| Filter Designator* | Filter Capacitance |
|---|---|
| 1 | 330 pF |
| 2 | 470 pF |
| 3 | 680 pF |
| 4 | 1000 pF |
| 5 | 1500 pF |

For electrical data, see page 106.

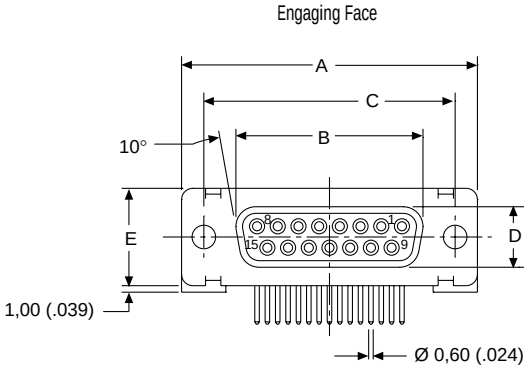


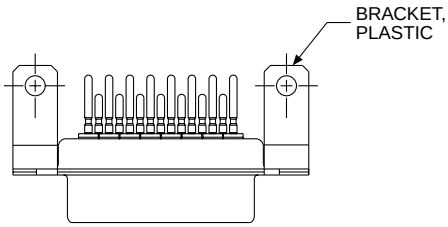


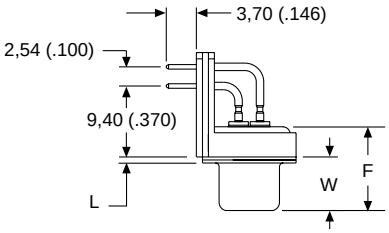


Dimensions

| Shell Size | A ±0,38 (.015) | B ±0,13 (.005) | C ±0,13 (.005) | D ±0,13 (.005) | E ±0,38 (.015) | F ±0,25 (.010) | W ±0,38 (.015) | L ±0,25 (.010) |
|---|---|---|---|---|---|---|---|---|
| DE | 30,81 (1.213) | 16,33 (.643) | 24,99 (.984) | 7,90 (.311) | 12,55 (.494) | 10,90 (.429) | 6,94 (.273) | 0,76 (.030) |
| DA | 39,14 (1.541) | 24,66 (.971) | 33,32 (1.312) | 7,90 (.311) | 12,55 (.494) | 10,90 (.429) | 6,94 (.273) | 0,76 (.030) |
| DB | 53,04 (2.088) | 38,38 (1.511) | 47,04 (1.852) | 7,90 (.311) | 12,55 (.494) | 10,90 (.429) | 6,94 (.273) | 0,76 (.030) |
| DC | 69,32 (2.729) | 54,84 (2.159) | 63,50 (2.500) | 7,90 (.311) | 12,55 (.494) | 10,90 (.429) | 6,94 (.273) | 0,76 (.030) |

♦ Connector footprint measured from the front shell.
♦♦ Connector footprint measured from the rear shell.

## D*JK — Straight P.C. Tails

Plug

Reader's Resource
For contact cavity arrangements, see page 224.
For P.C. hole patterns, see page 274.
For panel cutouts, see page 221.
For Hardware views (European), see page 227.
For pushfit/boardlock configuration, see page 225.

Part Numbers

| Shell Size | Layout | Through Hole | Clinch Nut #4-40 UNC | Clinch Nut M3 | Pushfit/Boardlock #4-40 UNC | Pushfit/Boardlock M3 |
|---|---|---|---|---|---|---|
| DE | 9 | DEJK9P*-OL4 | DEJKE9P*-OL4 | DEJKX9P*-OL4 | DEJKE9P*-OL4-146 | DEJKX9P*-OL4-146 |
| DA | 15 | DAJK15P*-OL4 | DAJKE15P*-OL4 | DAJKX15P*-OL4 | DAJKE15P*-OL4-146 | DAJKX15P*-OL4-146 |
| DB | 25 | DBJK25P*-OL4 | DBJKE25P*-OL4 | DBJKX25P*-OL4 | DBJKE25P*-OL4-146 | DBJKX25P*-OL4-146 |
| DC | 37 | DCJK37P*-OL4 | DCJKE37P*-OL4 | DCJKX37P*-OL4 | DCJKE37P*-OL4-146 | DCJKX37P*-OL4-146 |
| DD | 50 | DDJK50P*-OL4 | DDJKE50P*-OL4 | DDJKX50P*-OL4 | DDJKE50P*-OL4-146 | DDJKX50P*-OL4-146 |

* Insert filter designator. Example: DEJK9P4-0L4 (for 1000 pF filter capacitance)
Note: For performance class 1 add -A190. Example: DEJK9P1-0L4-A190

| Filter Designator* | Filter Capacitance |
|---|---|
| 1 | 330 pF |
| 2 | 470 pF |
| 3 | 680 pF |
| 4 | 1000 pF |
| 5 | 1500 pF |

For electrical data, see page 106.

Engaging Face

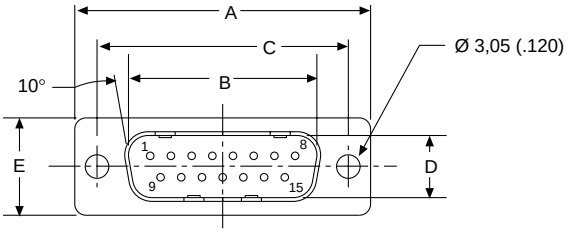


DD Configuration

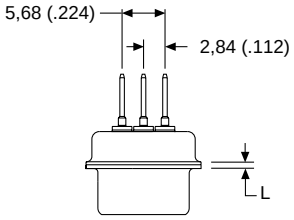


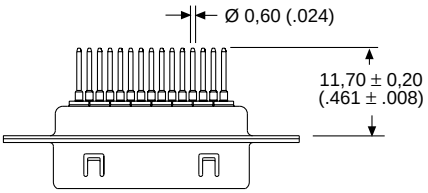


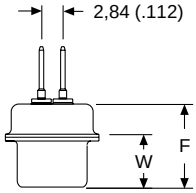


Dimensions

| Shell Size | A ±0,38 (.015) | B ±0,13 (.005) | C ±0,13 (.005) | D ±0,13 (.005) | E ±0,38 (.015) | F ±0,25 (.010) | W ±0,368 (.0145) | W ±0,41 (.016) | L ±0,25 (.010) |
|---|---|---|---|---|---|---|---|---|---|
| DE | 30,81 (1.213) | 16,92 (.666) | 24,99 (.984) | 8,36 (.329) | 12,55 (.494) | 10,72 (.422) | 6,693 (.2635) | — | 0,76 (.030) |
| DA | 39,14 (1.541) | 25,25 (.994) | 33,32 (1.312) | 8,36 (.329) | 12,55 (.494) | 10,72 (.422) | 6,693 (.2635) | — | 0,76 (.030) |
| DB | 53,04 (2.088) | 38,96 (1.534) | 47,04 (1.852) | 8,36 (.329) | 12,55 (.494) | 10,82 (.426) | — | 6,84 (.269) | 0,99 (.039) |
| DC | 69,32 (2.729) | 55,42 (2.182) | 63,50 (2.500) | 8,36 (.329) | 12,55 (.494) | 10,82 (.426) | — | 6,84 (.269) | 0,99 (.039) |
| DD | 66,93 (2.635) | 52,81 (2.079) | 61,11 (2.406) | 11,07 (.439) | 15,37 (.607) | 10,82 (.426) | — | 6,84 (.269) | 0,99 (.039) |



Dimensions are shown in mm (inch)
Dimensions subject to change

## D*JK — Straight P.C. Tails

Receptacle

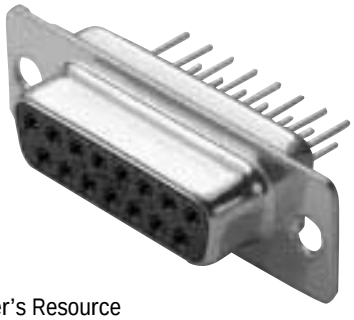

Reader's Resource

For contact cavity arrangements, see page 224.
For P.C. hole patterns, see page 274.
For panel cutouts, see page 221.
For Hardware views (European), see page 227.
For pushfit/boardlock configuration, see page 225.

Part Numbers

| Shell Size | Layout | Through Hole | Clinch Nut #4-40 UNC | Clinch Nut M3 | Pushfit/Boardlock #4-40 UNC | Pushfit/Boardlock M3 |
|---|---|---|---|---|---|---|
| DE | 9 | DEJK9S*-OL4 | DEJKE9S*-OL4 | DEJKX9S*-OL4 | DEJKE9S*-OL4-146 | DEJKX9S*-OL4-146 |
| DA | 15 | DAJK15S*-OL4 | DAJKE15S*-OL4 | DAJKX15S*-OL4 | DAJKE15S*-OL4-146 | DAJKX15S*-OL4-146 |
| DB | 25 | DBJK25S*-OL4 | DBJKE25S*-OL4 | DBJKX25S*-OL4 | DBJKE25S*-OL4-146 | DBJKX25S*-OL4-146 |
| DC | 37 | DCJK37S*-OL4 | DCJKE37S*-OL4 | DCJKX37S*-OL4 | DCJKE37S*-OL4-146 | DCJKX37S*-OL4-146 |

* Insert filter designator. Example: DEJK9S4-OL4 (for 1000 pF filter capacitance)
Note: For performance class 1 add -A190. Example: DEJK9S1-OL4-A190

| Filter Designator* | Filter Capacitance |
|---|---|
| 1 | 330 pF |
| 2 | 470 pF |
| 3 | 680 pF |
| 4 | 1000 pF |
| 5 | 1500 pF |

For electrical data, see page 106.

Engaging Face

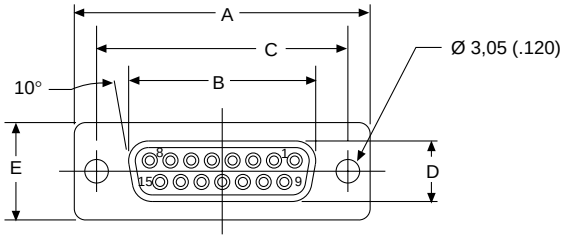


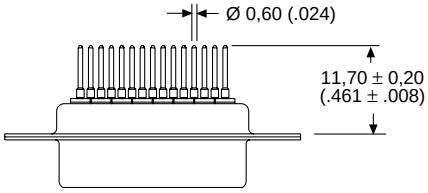


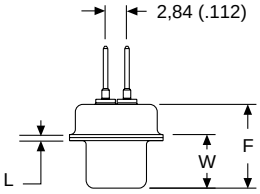


Dimensions

| Shell Size | A ±0,38 (.015) | B ±0,13 (.005) | C ±0,13 (.005) | D ±0,13 (.005) | E ±0,38 (.015) | F ±0,25 (.010) | W ±0,38 (.015) | L ±0,25 (.010) |
|---|---|---|---|---|---|---|---|---|
| DE | 30,81 (1.213) | 16,33 (.643) | 24,99 (.984) | 7,90 (.311) | 12,55 (.494) | 10,90 (.429) | 6,94 (.273) | 0,76 (.030) |
| DA | 39,14 (1.541) | 24,66 (.971) | 33,32 (1.312) | 7,90 (.311) | 12,55 (.494) | 10,90 (.429) | 6,94 (.273) | 0,76 (.030) |
| DB | 53,04 (2.088) | 38,38 (1.511) | 47,04 (1.852) | 7,90 (.311) | 12,55 (.494) | 10,90 (.429) | 6,94 (.273) | 0,76 (.030) |
| DC | 69,32 (2.729) | 54,84 (2.159) | 63,50 (2.500) | 7,90 (.311) | 12,55 (.494) | 10,90 (.429) | 6,94 (.273) | 0,76 (.030) |

## D*JT — Solder Cup

Plug

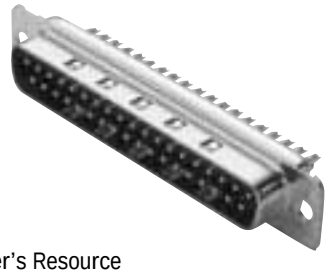

Reader's Resource
For contact cavity arrangements, see page 224.
For panel cutouts, see page 221.
For hardware views (European), see page 227.

Part Numbers

| Shell Size | Layout | Through Hole | Clinch Nut #4-40 UNC | Clinch Nut M3 |
|---|---|---|---|---|
| DE | 9 | DEJT9P* | DEJTE9P* | DEJTX9P* |
| DA | 15 | DAJT15P* | DAJTE15P* | DAJTX15P* |
| DB | 25 | DBJT25P* | DBJTE25P* | DBJTX25P* |
| DC | 37 | DCJT37P* | DCJTE37P* | DCJTX37P* |

* Insert filter designator. Example: DCJT37P4 (for 2000 pF filter capacitance)
Note: For performance class 1 add -A190. Example: DCJT37P1-A190

| Filter Designator* | Filter Capacitance |
|---|---|
| 1 | 1000 pF |
| 2 | 500 pF |
| 3 | 250 pF |
| 4 | 2000 pF |
| 5 | 5000 pF |

For electrical data, see page 107.

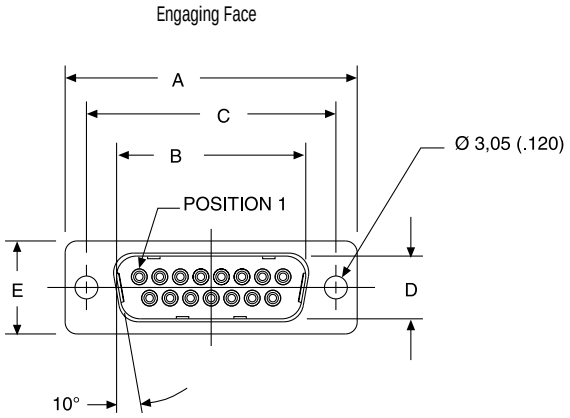


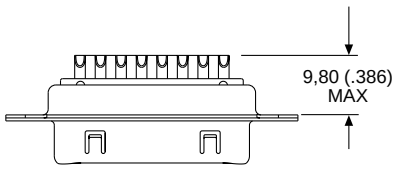


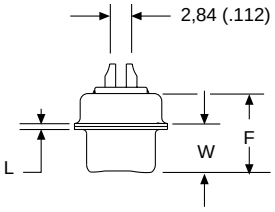


Dimensions

| Shell Size | A ±0,38 (.015) | B ±0,13 (.005) | C ±0,13 (.005) | D ±0.13 (.005) | E ±0,38 (.015) | F ±0,25 (.010) | W ±0,37 (.015) | W ±0,41 (.016) | L ±0,25 (.010) |
|---|---|---|---|---|---|---|---|---|---|
| DE | 30,81 (1.213) | 16,92 (.666) | 24,99 (.984) | 8,36 (.329) | 12,55 (.494) | 10,72 (.422) | 6,69 (.264) | — | 0,76 (.030) |
| DA | 39,14 (1.541) | 25,25 (.994) | 33,32 (1.312) | 8,36 (.329) | 12,55 (.494) | 10,72 (.422) | 6,69 (.264) | — | 0,76 (.030) |
| DB | 53,04 (2.088) | 38,96 (1.534) | 47,04 (1.852) | 8,36 (.329) | 12,55 (.494) | 10,82 (.426) | — | 6,84 (.269) | 0,99 (.039) |
| DC | 69,32 (2.729) | 55,42 (2.182) | 63,50 (2.500) | 8,36 (.329) | 12,55 (.494) | 10,82 (.426) | — | 6,84 (.269) | 0,99 (.039) |



Dimensions are shown in mm (inch)
Dimensions subject to change

## D*JT — Solder Cup

Receptacle

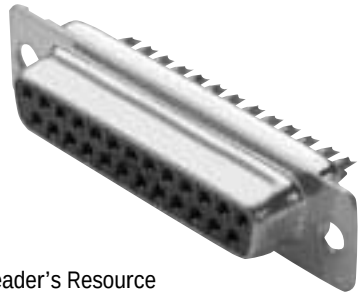

Reader's Resource
For contact cavity arrangements, see page 224.
For panel cutouts, see page 221.
For hardware views (European), see page 227.

Part Numbers

| Shell Size | Layout | Through Hole | Clinch Nut #4-40 UNC | Clinch Nut M3 |
|---|---|---|---|---|
| DE | 9 | DEJT9S* | DEJTE9S* | DEJTX9S* |
| DA | 15 | DAJT15S* | DAJTE15S* | DAJTX15S* |
| DB | 25 | DBJT25S* | DBJTE25S* | DBJTX25S* |
| DC | 37 | DCJT37S* | DCJTE37S* | DCJTX37S* |

* Insert filter designator. Example: DEJT9S4 (for 2000 pF filter capacitance)
Note: For performance class 1 add -A190. Example: DEJT9S1-A190

| Filter Designator* | Filter Capacitance |
|---|---|
| 1 | 1000 pF |
| 2 | 500 pF |
| 3 | 250 pF |
| 4 | 2000 pF |
| 5 | 5000 pF |

For electrical data, see page 107.

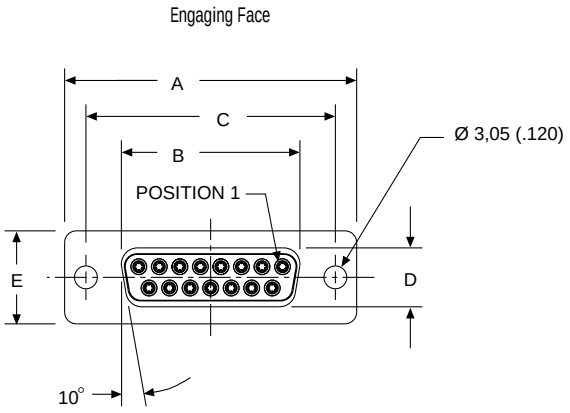


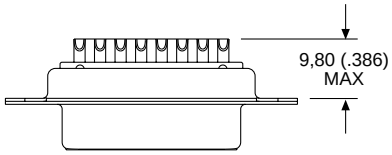


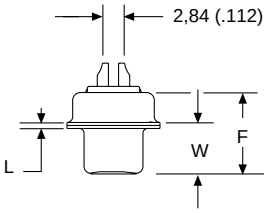


Dimensions

| Shell Size | A ±0,38 (.015) | B ±0,13 (.005) | C ±0,13 (.005) | D ±0,13 (.005) | E ±0,38 (.015) | F ±0,25 (.010) | W ±0,38 (.015) | L ±0,25 (.010) |
|---|---|---|---|---|---|---|---|---|
| DE | 30,81 (1.213) | 16,33 (.643) | 24,99 (.984) | 7,90 (.311) | 12,55 (.494) | 10,90 (.429) | 6,94 (.273) | 0,76 (.030) |
| DA | 39,14 (1.541) | 24,66 (.971) | 33,32 (1.312) | 7,90 (.311) | 12,55 (.494) | 10,90 (.429) | 6,94 (.273) | 0,76 (.030) |
| DB | 53,04 (2.088) | 38,38 (1.511) | 47,04 (1.852) | 7,90 (.311) | 12,55 (.494) | 10,90 (.429) | 6,94 (.273) | 0,76 (.030) |
| DC | 69,32 (2.729) | 54,84 (2.159) | 63,50 (2.500) | 7,90 (.311) | 12,55 (.494) | 10,90 (.429) | 6,94 (.273) | 0,76 (.030) |

## D*JT Combo — High Power 90°

Plug

Reader's Resource
For contact cavity arrangements, see page 222.
For P.C. hole patterns, see page 250.
For panel cutouts, see page 221.
For hardware views (European), see page 227.

### Part Numbers

| Filter Capacitance | Through Hole | Clinch Nut #4-40 UNC | Clinch Nut M3 |
|---|---|---|---|
| 1000 pF | DAJT3W3P1-1A0N | DAJTE3W3P1-1A0N | DAJTX3W3P1-1A0N |
| 1500 pF | DAJT3W3P6-1A0N | DAJTE3W3P6-1A0N | DAJTX3W3P6-1A0N |
| 5000 pF | DAJT3W3P5-1A0N | DAJTE3W3P5-1A0N | DAJTX3W3P5-1A0N |
| 47000 pF | DAJT3W3P9-1A0N | DAJTE3W3P9-1A0N | DAJTX3W3P9-1A0N |

Note: For performance class 1 add -A190. Example: DAJT3WK3P6-1A0N-A190

### Part Numbers — Keyed Configuration

| Filter Capacitance | Through Hole | Clinch Nut #4-40 UNC | Clinch Nut M3 |
|---|---|---|---|
| 1000 pF | DAJT3WK3P1-1A0N | DAJTE3WK3P1-1A0N | DAJTX3WK3P1-1A0N |
| 1500 pF | DAJT3WK3P6-1A0N | DAJTE3WK3P6-1A0N | DAJTX3WK3P6-1A0N |
| 5000 pF | DAJT3WK3P5-1A0N | DAJTE3WK3P5-1A0N | DAJTX3WK3P5-1A0N |
| 47000 pF | DAJT3WK3P9-1A0N | DAJTE3WK3P9-1A0N | DAJTX3WK3P9-1A0N |

Note: For performance class 1 add -A190. Example: DAJT3WK3P6-1A0N-A190
For electrical data, see page 107.

Engaging Face

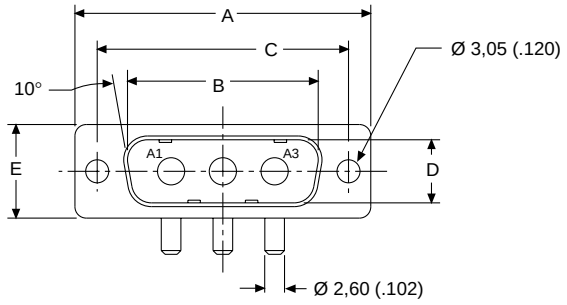


Keyed Configuration

Engaging Face

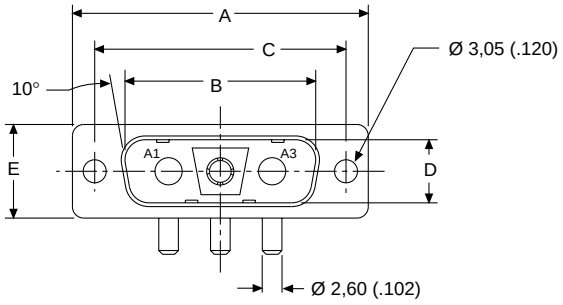


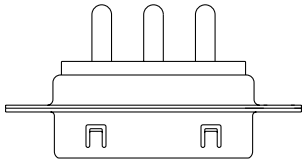

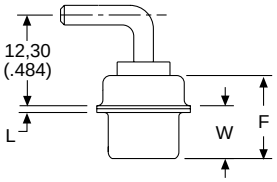


### Dimensions

| Shell Size | A ±0,38 (.015) | B ±0,13 (.005) | C ±0,13 (.005) | D ±0,13 (.005) | E ±0,38 (.015) | F ±0,25 (.010) | W ±0,368 (.0145) | L ±0,25 (.010) |
|---|---|---|---|---|---|---|---|---|
| DA | 39,14 (1.541) | 25,25 (.994) | 33,32 (1.312) | 8,36 (.329) | 12,55 (.494) | 10,72 (.422) | 6,693 (.2635) | 0,76 (.030) |



Dimensions are shown in mm (inch)
Dimensions subject to change

## D*JT Combo — High Power 90°

Receptacle

Reader's Resource
For contact cavity arrangements, see page 223.
For P.C. hole patterns, see page 252.
For panel cutouts, see page 221.
For hardware views (European), see page 227.

### Part Numbers

| Filter Capacitance | Through Hole | Clinch Nut #4-40 UNC | Clinch Nut M3 |
|---|---|---|---|
| 1000 pF | DAJT3W3S1-1A0N | DAJTE3W3S1-1A0N | DAJTX3W3S1-1A0N |
| 1500 pF | DAJT3W3S6-1A0N | DAJTE3W3S6-1A0N | DAJTX3W3S6-1A0N |
| 5000 pF | DAJT3W3S5-1AON | DAJTE3W3S5-1AON | DAJTX3W3S5-1AON |
| 47000 pF | DAJT3W3S9-1A0N | DAJTE3W3S9-1A0N | DAJTX3W3S9-1A0N |

Note: For performance class 1 add -A190. Example: DAJT3W3S9-1AON-A190

### Part Numbers — Keyed Configuration

| Filter Capacitance | Through Hole | Clinch Nut #4-40 UNC | Clinch Nut M3 |
|---|---|---|---|
| 1000 pF | DAJT3WK3S1-1A0N | DAJTE3WK3S1-1A0N | DAJTX3WK3S1-1A0N |
| 1500 pF | DAJT3WK3S6-1A0N | DAJTE3WK3S6-1A0N | DAJTX3WK3S6-1A0N |
| 5000 pF | DAJT3WK3S5-1AON | DAJTE3WK3S5-1AON | DAJTX3WK3S5-1AON |
| 47000pF | DAJT3WK3S9-1A0N | DAJTE3WK3S9-1A0N | DAJTX3WK3S9-1A0N |

Note: For performance class 1 add -A190. Example: DAJT3WK3S9-1AON-A190
For electrical data, see page 107.

Engaging Face

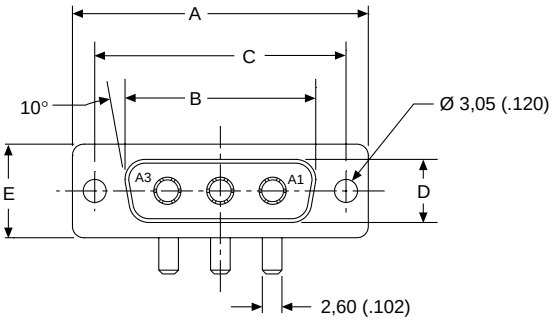


Keyed Configuration

Engaging Face

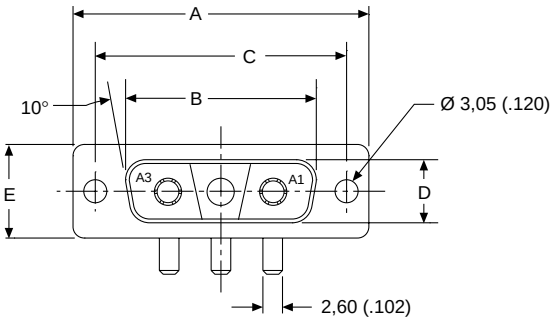


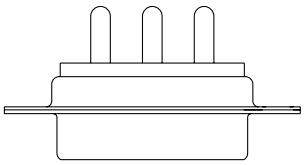

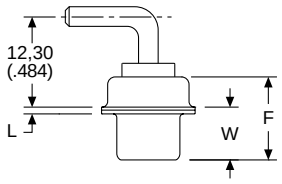


### Dimensions

| Shell Size | A ±0,38 (.015) | B ±0,13 (.005) | C ±0,13 (.005) | D ±0,13 (.005) | E ±0,38 (.015) | F ±0,25 (.010) | W ±0,38 (.015) | L ±0,25 (.010) |
|---|---|---|---|---|---|---|---|---|
| DA | 39,14 (1.541) | 24,66 (.971) | 33,32 (1.312) | 7,90 (.311) | 12,55 (.494) | 10,90 (.429) | 6,94 (.273) | 0,76 (.030) |

## D*JT Combo — High Power Straight

Plug

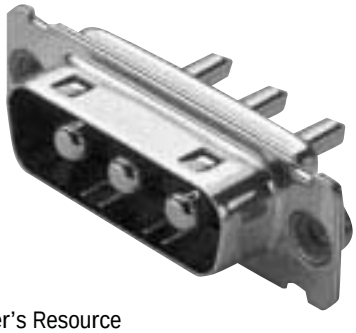

Reader's Resource
For contact cavity arrangements, see page 222.
For P.C. hole patterns, see page 254.
For panel cutouts, see page 221.
For hardware views (European), see page 227.

### Part Numbers

| Filter Capacitance | Through Hole | Clinch Nut #4-40 UNC | Clinch Nut M3 |
|---|---|---|---|
| 1000 pF | DAJT3W3P1-OL4 | DAJTE3W3P1-OL4 | DAJTX3W3P1-OL4 |
| 1500 pF | DAJT3W3P6-OL4 | DAJTE3W3P6-OL4 | DAJTX3W3P6-OL4 |
| 5000 pF | DAJT3W3P5-OL4 | DAJTE3W3P5-OL4 | DAJTX3W3P5-OL4 |
| 47000 pF | DAJT3W3P9-OL4 | DAJTE3W3P9-OL4 | DAJTX3W3P9-OL4 |

Note: For performance class 1 add -A190. Example: DAJT3W3P6-OL4-A190

### Part Numbers — Keyed Configuration

| Filter Capacitance | Through Hole | Clinch Nut #4-40 UNC | Clinch Nut M3 |
|---|---|---|---|
| 1000 pF | DAJT3WK3P1-OL4 | DAJTE3WK3P1-OL4 | DAJTX3WK3P1-OL4 |
| 1500 pF | DAJT3WK3P6-OL4 | DAJTE3WK3P6-OL4 | DAJTX3WK3P6-OL4 |
| 5000 pF | DAJT3WK3P5-OL4 | DAJTE3WK3P5-OL4 | DAJTX3WK3P5-OL4 |
| 47000 pF | DAJT3WK3P9-OL4 | DAJTE3WK3P9-OL4 | DAJTX3WK3P9-OL4 |

Note: For performance class 1 add -A190. Example: DAJT3WK3P6-OL4-A190
For electrical data, see page 107.

Engaging Face

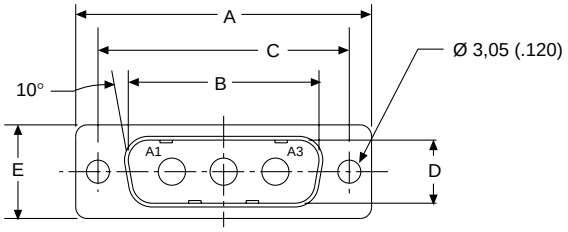


Keyed Configuration

Engaging Face

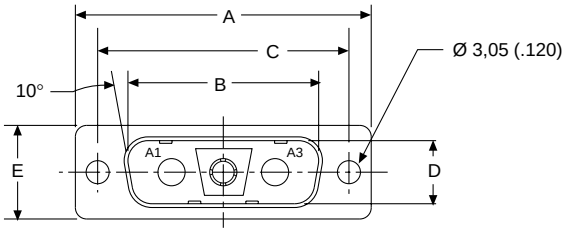


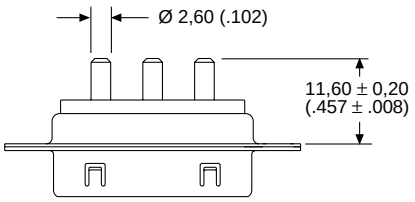


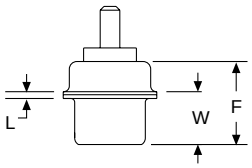


### Dimensions

| Shell Size | A ±0,38 (.015) | B ±0,13 (.005) | C ±0,13 (.005) | D ±0,13 (.005) | E ±0,38 (.015) | F ±0,25 (.010) | W ±0,368 (.0145) | L ±0,25 (.010) |
|---|---|---|---|---|---|---|---|---|
| DA | 39,14 (1.541) | 25,25 (.994) | 33,32 (1.312) | 8,36 (.329) | 12,55 (.494) | 10,72 (.422) | 6,693 (.2635) | 0,76 (.030) |



Dimensions are shown in mm (inch)
Dimensions subject to change

## D*JT Combo — High Power Straight

Receptacle

Reader's Resource
For contact cavity arrangements, see page 223.
For P.C. hole patterns, see page 257.
For panel cutouts, see page 221.
For hardware views (European), see page 227.

### Part Numbers

| Filter Capacitance | Through Hole | Clinch Nut #4-40 UNC | Clinch Nut M3 |
|---|---|---|---|
| 1000 pF | DAJT3W3S1-OL4 | DAJTE3W3S1-OL4 | DAJTX3W3S1-OL4 |
| 1500 pF | DAJT3W3S6-OL4 | DAJTE3W3S6-OL4 | DAJTX3W3S6-OL4 |
| 5000 pF | DAJT3W3S5-OL4 | DAJTE3W3S5-OL4 | DAJTX3W3S5-OL4 |
| 47000 pF | DAJT3W3S9-OL4 | DAJTE3W3S9-OL4 | DAJTX3W3S9-OL4 |

Note: For performance class 1 add -A190. Example: DAJT3W3S6-OL4-A190

### Part Numbers — Keyed Configuration

| Filter Capacitance | Through Hole | Clinch Nut #4-40 UNC | Clinch Nut M3 |
|---|---|---|---|
| 1000 pF | DAJT3WK3S1-OL4 | DAJTE3WK3S1-OL4 | DAJTX3WK3S1-OL4 |
| 1500 pF | DAJT3WK3S6-OL4 | DAJTE3WK3S6-OL4 | DAJTX3WK3S6-OL4 |
| 5000 pF | DAJT3WK3S5-OL4 | DAJTE3WK3S5-OL4 | DAJTX3WK3S5-OL4 |
| 47000 pF | DAJT3WK3S9-OL4 | DAJTE3WK3S9-OL4 | DAJTX3WK3S9-OL4 |

Note: For performance class 1 add -A190. Example: DAJT3WK3S-OL4-A190
For electrical data, see page 107.

Engaging Face

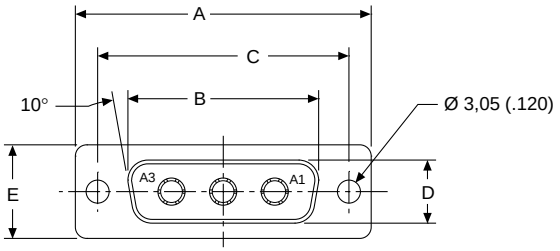


Keyed Configuration

Engaging Face

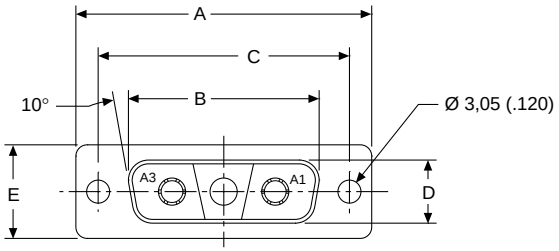


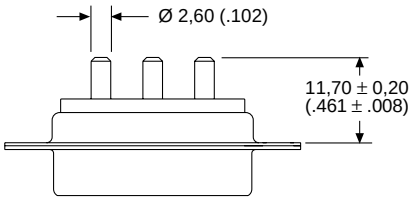


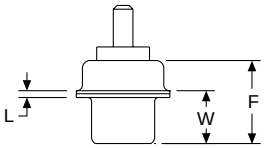


### Dimensions

| Shell Size | A ±0,38 (.015) | B ±0,13 (.005) | C ±0,13 (.005) | D ±0,13 (.005) | E ±0,38 (.015) | F ±0,25 (.010) | W ±0,38 (.015) | L ±0,25 (.010) |
|---|---|---|---|---|---|---|---|---|
| DA | 39,14 (1.541) | 24,66 (.971) | 33,32 (1.312) | 7,90 (.311) | 12,55 (.494) | 10,90 (.429) | 6,94 (.273) | 0,76 (.030) |

## D*JT Combo — High Power Solder Cup

Plug

Reader's Resource
For contact cavity arrangements, see page 222.
For panel cutouts, see page 221.
For hardware views (European), see page 227.

### Part Numbers

| Filter Capacitance | Through Hole | Clinch Nut #4-40 UNC | Clinch Nut M3 |
|---|---|---|---|
| 1000 pF | DAJT3W3P1 | DAJTE3W3P1 | DAJTX3W3P1 |
| 1500 pF | DAJT3W3P6 | DAJTE3W3P6 | DAJTX3W3P6 |
| 5000 pF | DAJT3W3P5 | DAJTE3W3P5 | DAJTX3W3P5 |
| 47000 pF | DAJT3W3P9 | DAJTE3W3P9 | DAJTX3W3P9 |

Note: For performance class 1 add -A190. Example: DAJT3W3P6-A190

### Part Numbers – Keyed Configuration

| Filter Capacitance | Through Hole | Clinch Nut #4-40 UNC | Clinch Nut M3 |
|---|---|---|---|
| 1000 pF | DAJT3WK3P1 | DAJTE3WK3P1 | DAJTX3WK3P1 |
| 1500 pF | DAJT3WK3P6 | DAJTE3WK3P6 | DAJTX3WK3P6 |
| 5000 pF | DAJT3WK3P5 | DAJTE3WK3P5 | DAJTX3WK3P5 |
| 47000 pF | DAJT3WK3P9 | DAJTE3WK3P9 | DAJTX3WK3P9 |

Note: For performance class 1 add -A190. Example: DAJT3WK3P6-A190
For electrical data, see page 107.

Engaging Face

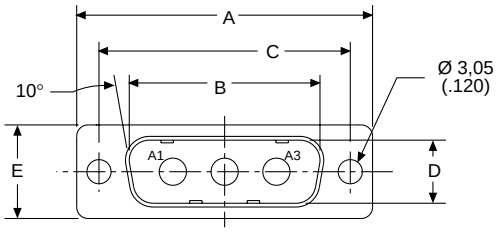


Keyed Configuration

Engaging Face

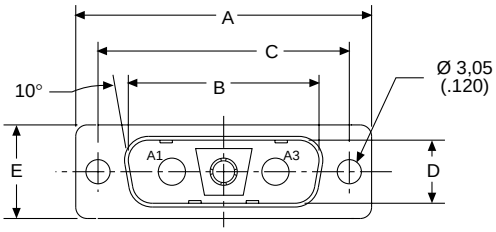


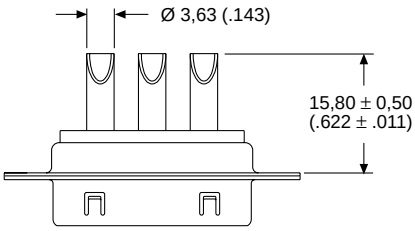


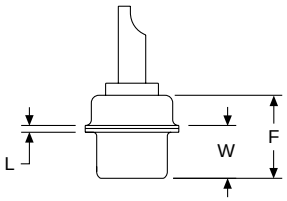


### Dimensions

| Shell Size | A ±0,38 (.015) | B ±0,13 (.005) | C ±0,13 (.005) | D ±0,13 (.005) | E ±0,38 (.015) | F ±0,25 (.010) | W ±0,368 (.0145) | L ±0,25 (.010) |
|---|---|---|---|---|---|---|---|---|
| DA | 39,14 (1.541) | 25,25 (.994) | 33,32 (1.312) | 8,36 (.329) | 12,55 (.494) | 10,72 (.422) | 6,693 (.2635) | 0,76 (.030) |



ITT Cannon

Dimensions are shown in mm (inch)
Dimensions subject to change

## D*JT Combo — High Power Solder Cup

Receptacle

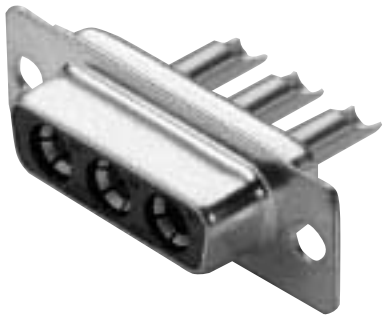

Reader's Resource
For contact cavity arrangements, see page 223.
For panel cutouts, see page 221.
For hardware views (European), see page 227.

### Part Numbers

| Filter Capacitance | Through Hole | Clinch Nut #4-40 UNC | Clinch Nut M3 |
|---|---|---|---|
| 1000 pF | DAJT3W3S1 | DAJTE3W3S1 | DAJTX3W3S1 |
| 1500 pF | DAJT3W3S6 | DAJTE3W3S6 | DAJTX3W3S6 |
| 5000 pF | DAJT3W3S5 | DAJTE3W3S5 | DAJTX3W3S5 |
| 47000 pF | DAJT3W3S9 | DAJTE3W3S9 | DAJTX3W3S9 |

Note: For performance class 1 add -A190. Example: DAJT3W3S6-A190

### Part Numbers — Keyed Configuration

| Filter Capacitance | Through Hole | Clinch Nut #4-40 UNC | Clinch Nut M3 |
|---|---|---|---|
| 1000 pF | DAJT3WK3S1 | DAJTE3WK3S1 | DAJTX3WK3S1 |
| 1500 pF | DAJT3WK3S6 | DAJTE3WK3S6 | DAJTX3WK3S6 |
| 5000 pF | DAJT3WK3S5 | DAJTE3WK3S5 | DAJTX3WK3S5 |
| 47000 pF | DAJT3WK3S9 | DAJTE3WK3S9 | DAJTX3WK3S9 |

Note: For performance class 1 add -A190. Example: DAJT3WK3S6-A190
For electrical data, see page 107.

Engaging Face

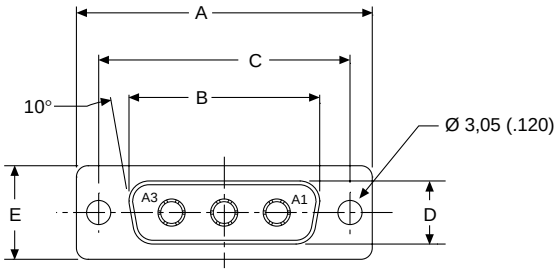


Keyed Configuration

Engaging Face

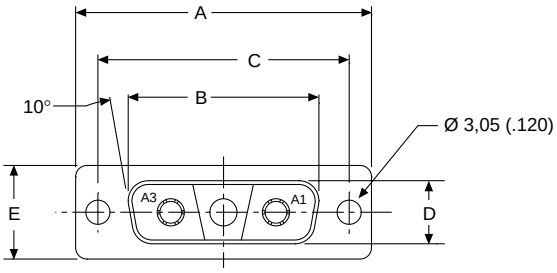


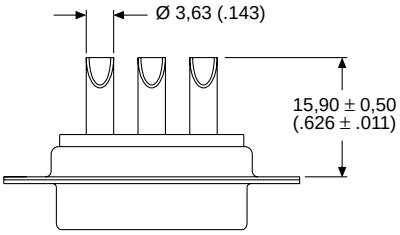


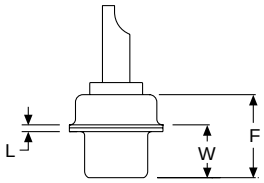


### Dimensions

| Shell Size | A ±0,38 (.015) | B ±0,13 (.005) | C ±0,13 (.005) | D ±0,13 (.005) | E ±0,38 (.015) | F ±0,25 (.010) | W ±0,38 (.015) | L ±0,25 (.010) |
|---|---|---|---|---|---|---|---|---|
| DA | 39,14 (1.541) | 24,66 (.971) | 33,32 (1.312) | 7,90 (.311) | 12,55 (.494) | 10,90 (.429) | 6,94 (.273) | 0,76 (.030) |

Selection Index Page

Military/High Reliability
An Introduction . . . . . 130
Standard Layout
90° PC Tail with Plastic Bracket . . . . . 132
90° PC Tail. . . . . 134
Straight PC Tail . . . . . 136
Wrap Post Connector . . . . . 138
Solder Cup Connector . . . . . 140
24308-Style Cross Reference . . . . . 142
MIL-C-39028 Crimp Contacts . . . . . 143
HE501/D*M Cross Reference . . . . . 144
MIL-24308 Test Data . . . . . 145
Combo D® PCB Connectors with Coaxial 75 Ohm Contacts (50 Ohm Option)
Coaxial 90° (Sizes DE-DC) . . . . . 146
Coaxial 90° (Size DD). . . . . 148
Coaxial Straight (Sizes DE-DC) . . . . . 150
Coaxial Straight (Size DD). . . . . 152
Combo D® PCB Connectors with High Power Contacts
40 A High Power 90° (Sizes DE-DC). . . . . 154
40 A High Power 90° (Size DD) . . . . . 156
40 A High Power Straight (Sizes DE-DC). . . . . 158
40 A High Power Straight (Size DD) . . . . . 160
Combo D® PCB Connectors with High Voltage Contacts
High Voltage Straight (Sizes DE-DC) . . . . . 162
High Voltage Straight (Size DD). . . . . 164
Combo D® PCB Connectors with (Size 20) Signal Contacts Only
Cable Solder Cup (Sizes DE-DD). . . . . 166



Dimensions are shown in mm (inch)
Dimensions subject to change

ITT Cannon Military/High Reliability D Subminiature connectors are used in many applications, including aerospace, transportation, communication systems, information systems and test equipment. Being the inventor of the D Subminiature connector, ITT Cannon is able to use its extensive design expertise and high quality manufacturing processes to insure the optimum performance and reliability.

The D Subminiature connectors with fixed contacts in solder cup, straight and 90° PC contact terminations are designed to be comparable to MIL-C-24308 (see cross reference, pages 142-143). These high-reliability D Subminiature connectors are the finest quality connectors available at the most competitive prices in the market.

Applications:
- Aerospace
- Transportation
- Communication Systems
- Information Systems
- Test Equipment

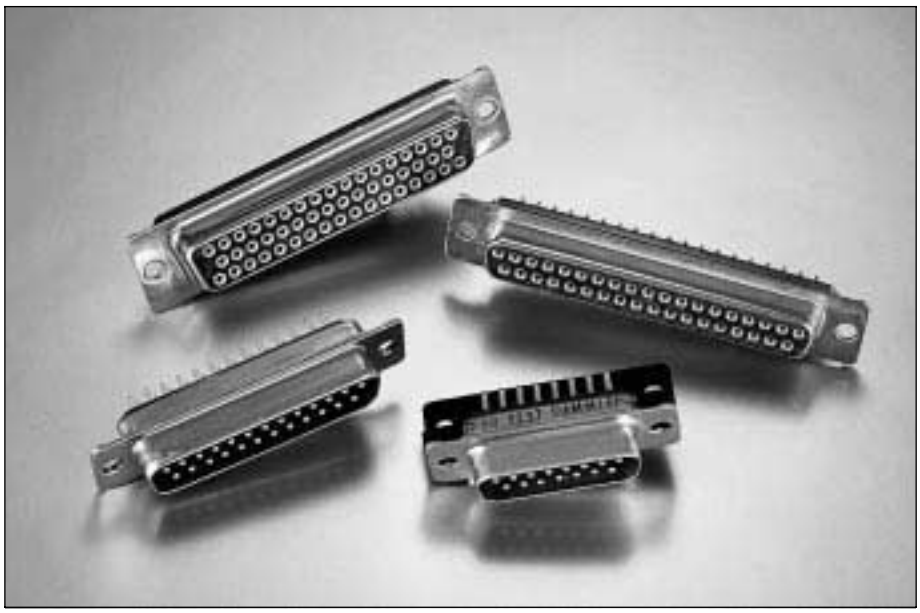

## Product Features

- Suitable for a variety of cable and printed circuit board options
- Solder cup version accommodates wire size 20 AWG maximum
- 5 A standard current rating
- Clinch Nut and Float Mount Options

## Specifications

| | |
|---|---|
| Temperature Rating | −55°C to 125°C |
| Signal Contact Current Rating | 7.5 A current capacity |
| Signal Contact Resistance | 55 millivolt max. at 7.5 test current |
| Signal Contact Dielectric Withstanding Voltage | 1250 VAC at Sea Level |
| Coaxial Current Rating | 5 A |
| Coaxial Dielectric Withstanding Voltage | 1000 VAC at Sea Level |
| Coaxial Impedance | 75 Ω or 50 Ω |
| Coaxial VSWR | Less than 1.30 + .03F for F up to 500 MHz |
| Coaxial Insertion Loss | .3dB loss at 500 MHz |
| High Power Current Rating | Up to 40 A |
| High Power Dielectric Withstanding Voltage | 1000 VAC at Sea Level |
| High Voltage Current Rating | 5 A |
| High Voltage Contact Dielectric Withstanding Voltage | 2800 V at Sea Level |

## Materials and Finishes

| Description | Material | Finish/Treatment |
|---|---|---|
| Shell | Steel | Yellow Chromate over Zinc (Cadmium available upon request; order code -A101) |
| Insulator | Polyester, UL 94V-0, Color: Green | None |
| Contacts (Military) | Copper Alloy | 50 microinches of Gold over Nickel in mating area, Gold over Nickel on balance |
| Contacts (Commercial) | Copper Alloy | Gold over Nickel on mating area, Tin on balance |
| Dual Float Mount Hardware | Stainless Steel | Passivated |
| Clinch Nut Hardware | Stainless Steel with plastic insert | Passivated |
| Standoff | Stainless Steel | Passivated |
| Plastic Bracket | Thermoplastic, UL 94V-0 | None |
| Metal Bracket | Steel | Zinc (Tin if boardlocks are attached) |

Coaxial/High Power/High Voltage Contact Assemblies

| | | |
|---|---|---|
| Contacts and Outer Shells | Copper Alloy | Gold over Nickel |
| Ring, Retaining | Copper Alloy | Nickel |
| Insulator (Coaxial Only) | Teflon | None |
| Insulator (High Voltage Only) | Thermoplastic | None |

## 90° PC Tail with Plastic Bracket

Plug

Reader's Resource

For contact cavity arrangements, see page 224.
For P.C. hole patterns, see page 272.
For panel cutouts, see page 221.

Part Numbers

| | | Military Part Numbers | | | | | |
|---|---|---|---|---|---|---|---|
| | | Ø Y 0,76 (.030) | | | Ø Y 1,02 (.040) | | |
| Shell Size | Layout | X 3,23 (.127) | X 4,01 (.158) | X 4,65 (.183) | X 3,23 (.127) | X 4,01 (.158) | X 4,65 (.183) |
| DE | 9 | DEMM9PD | DEMM9PL | DEMM9PS | DEMM9PA | DEMM9PG | DEMM9PW |
| DA | 15 | DAMM15PD | DAMM15PL | DAMM15PS | DAMM15PA | DAMM15PG | DAMM15PW |
| DB | 25 | DBMM25PD | DBMM25PL | DBMM25PS | DBMM25PA | DBMM25PG | DBMM25PW |
| DC | 37 | DCMM37PD | DCMM37PL | DCMM37PS | DCMM37PA | DCMM37PG | DCMM37PW |
| DD | 50 | DDMM50PD | DDMM50PL | DDMM50PS | DDMM50PA | DDMM50PG | DDMM50PW |

| | | Commercial Part Numbers | | | | | |
|---|---|---|---|---|---|---|---|
| | | Ø Y 0,76 (.030) | | | Ø Y 1,02 (.040) | | |
| Shell Size | Layout | X 3,23 (.127) | X 4,01 (.158) | X 4,65 (.183) | X 3,23 (.127) | X 4,01 (.158) | X 4,65 (.183) |
| DE | 9 | DEM9PD | DEM9PL | DEM9PS | DEM9PA | DEM9PG | DEM9PW |
| DA | 15 | DAM15PD | DAM15PL | DAM15PS | DAM15PA | DAM15PG | DAM15PW |
| DB | 25 | DBM25PD | DBM25PL | DBM25PS | DBM25PA | DBM25PG | DBM25PW |
| DC | 37 | DCM37PD | DCM37PL | DCM37PS | DCM37PA | DCM37PG | DCM37PW |
| DD | 50 | DDM50PD | DDM50PL | DDM50PS | DDM50PA | DDM50PG | DDM50PW |

Engaging Face

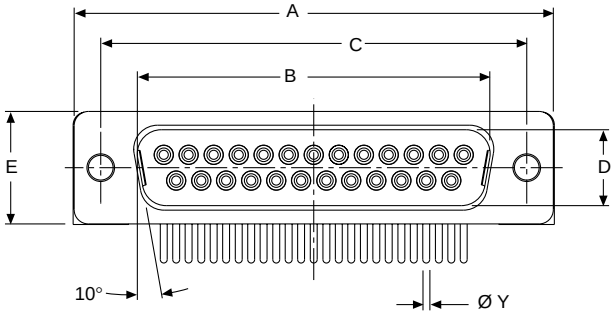


DD Configuration

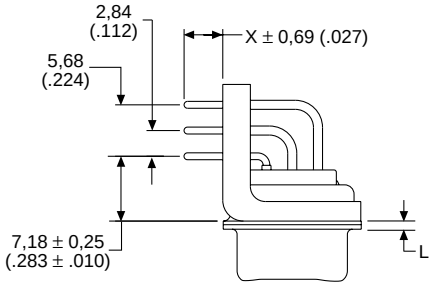


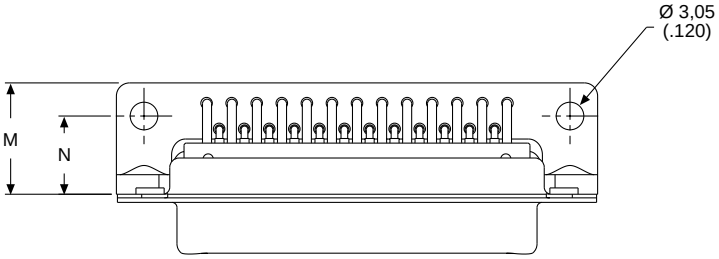


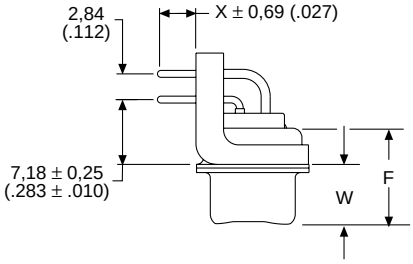


Dimensions

| Shell Size | A ±0,38 (.015) | B ±0,13 (.005) | C ±0,13 (.005) | D ±0,13 (.005) | E ±0,38 (.015) | F ±0,25 (.010) | W ±0,368 (.0145) | W ±0,41 (.016) | L ±0,25 (.010) | M ±0,25 (.010) | N ±0,13 (.005) |
|---|---|---|---|---|---|---|---|---|---|---|---|
| DE | 30,81 (1.213) | 16,92 (.666) | 24,99 (.984) | 8,36 (.329) | 12,55 (.494) | 10,72 (.422) | 6,693 (.2635) | — | 0,76 (.030) | 12,30 (.484) | 8,64 (.340) |
| DA | 39,14 (1.541) | 25,25 (.994) | 33,32 (1.312) | 8,36 (.329) | 12,55 (.494) | 10,72 (.422) | 6,693 (.2635) | — | 0,76 (.030) | 12,30 (.484) | 8,64 (.340) |
| DB | 53,04 (2.088) | 38,96 (1.534) | 47,04 (1.852) | 8,36 (.329) | 12,55 (.494) | 10,82 (.426) | — | 6,84 (.269) | 0,99 (.039) | 12,30 (.484) | 8,64 (.340) |
| DC | 69,32 (2.729) | 55,42 (2.182) | 63,50 (2.500) | 8,36 (.329) | 12,55 (.494) | 10,82 (.426) | — | 6,84 (.269) | 0,99 (.039) | 12,30 (.484) | 8,64 (.340) |
| DD | 66,93 (2.635) | 52,81 (2.079) | 61,11 (2.406) | 11,07 (.436) | 15,37 (.605) | 10,82 (.426) | — | 6,84 (.269) | 0,99 (.039) | 15,09 (.594) | 10,04 (.395) |



ITT Cannon

Dimensions are shown in mm (inch)
Dimensions subject to change

## 90° PC Tail with Plastic Bracket

Receptacle

Reader's Resource
For contact cavity arrangements, see page 224.
For P.C. hole patterns, see page 272.
For panel cutouts, see page 221.

Part Numbers

| | | Military Part Numbers | | | | | |
|---|---|---|---|---|---|---|---|
| | | Ø Y 0,76 (.030) | | | Ø Y 1,02 (.040) | | |
| Shell Size | Layout | X 3,23 (.127) | X 4,01 (.158) | X 4,65 (.183) | X 3,23 (.127) | X 4,01 (.158) | X 4,65 (.183) |
| DE | 9 | DEMM9SD | DEMM9SL | DEMM9SS | DEMM9SA | DEMM9SG | DEMM9SW |
| DA | 15 | DAMM15SD | DAMM15SL | DAMM15SS | DAMM15SA | DAMM15SG | DAMM15SW |
| DB | 25 | DBMM25SD | DBMM25SL | DBMM25SS | DBMM25SA | DBMM25SG | DBMM25SW |
| DC | 37 | DCMM37SD | DCMM37SL | DCMM37SS | DCMM37SA | DCMM37SG | DCMM37SW |
| DD | 50 | DDMM50SD | DDMM50SL | DDMM50SS | DDMM50SA | DDMM50SG | DDMM50SW |

| | | Commercial Part Numbers | | | | | |
|---|---|---|---|---|---|---|---|
| | | Ø Y 0,76 (.030) | | | Ø Y 1,02 (.040) | | |
| Shell Size | Layout | X 3,23 (.127) | X 4,01 (.158) | X 4,65 (.183) | X 3,23 (.127) | X 4,01 (.158) | X 4,65 (.183) |
| DE | 9 | DEM9SD | DEM9SL | DEM9SS | DEM9SA | DEM9SG | DEM9SW |
| DA | 15 | DAM15SD | DAM15SL | DAM15SS | DAM15SA | DAM15SG | DAM15SW |
| DB | 25 | DBM25SD | DBM25SL | DBM25SS | DBM25SA | DBM25SG | DBM25SW |
| DC | 37 | DCM37SD | DCM37SL | DCM37SS | DCM37SA | DCM37SG | DCM37SW |
| DD | 50 | DDM50SD | DDM50SL | DDM50SS | DDM50SA | DDM50SG | DDM50SW |

Engaging Face

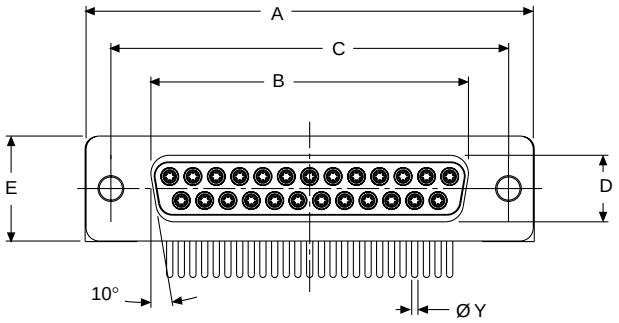


DD Configuration

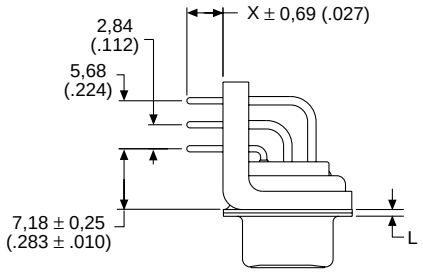


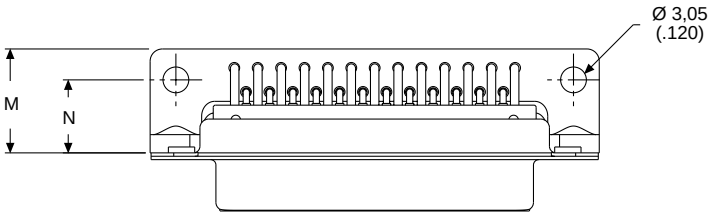


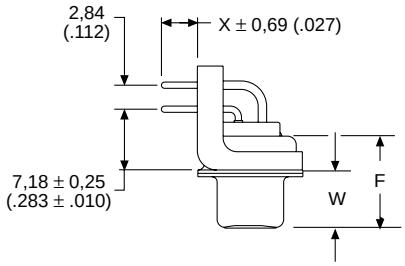


Dimensions

| Shell Size | A ±0,38 (.015) | B ±0,13 (.005) | C ±0,13 (.005) | D ±0,13 (.005) | E ±0,38 (.015) | F ±0,25 (.010) | W ±0,38 (.015) | L ±0,25 (.010) | M ±0,25 (.010) | N ±0,13 (.005) |
|---|---|---|---|---|---|---|---|---|---|---|
| DE | 30,81 (1.213) | 16,33 (.643) | 24,99 (.984) | 7,90 (.311) | 12,55 (.494) | 10,90 (.429) | 6,94 (.273) | 0,76 (.030) | 12,30 (.484) | 8,64 (.340) |
| DA | 39,14 (1.541) | 24,66 (.971) | 33,32 (1.312) | 7,90 (.311) | 12,55 (.494) | 10,90 (.429) | 6,94 (.273) | 0,76 (.030) | 12,30 (.484) | 8,64 (.340) |
| DB | 53,04 (2.088) | 38,38 (1.511) | 47,04 (1.852) | 7,90 (.311) | 12,55 (.494) | 10,90 (.429) | 6,94 (.273) | 0,76 (.030) | 12,30 (.484) | 8,64 (.340) |
| DC | 69,32 (2.729) | 54,84 (2.159) | 63,50 (2.500) | 7,90 (.311) | 12,55 (.494) | 10,90 (.429) | 6,94 (.273) | 0,76 (.030) | 12,30 (.484) | 8,64 (.340) |
| DD | 66,93 (2.635) | 52,42 (2.064) | 61,11 (2.406) | 10,74 (.423) | 15,37 (.605) | 10,90 (.429) | 6,94 (.273) | 0,76 (.030) | 15,09 (.594) | 10,04 (.395) |

## 90° PC Tail

Plug

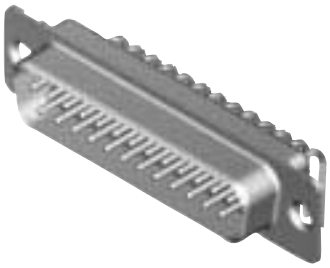

Reader's Resource

For contact cavity arrangements, see page 224.
For P.C. hole patterns, see page 272.
For panel cutouts, see page 221.
For hardware views (Standard), see page 226.

Part Numbers

| | | Military Part Numbers | | | | |
|---|---|---|---|---|---|---|
| | | Ø Y 0,76 (.030) | | | Ø Y 1,02 (.040) | |
| Shell Size | Layout | X 3,23 (.127) | X 4,01 (.158) | X 4,65 (.183) | X 3,23 (.127) | X 4,01 (.158) |
| DE | 9 | DEMM9PF | DEMM9PP | DEMM9PR | DEMM9PC | DEMM9PK |
| DA | 15 | DAMM15PF | DAMM15PP | DAMM15PR | DAMM15PC | DAMM15PK |
| DB | 25 | DBMM25PF | DBMM25PP | DBMM25PR | DBMM25PC | DBMM25PK |
| DC | 37 | DCMM37PF | DCMM37PP | DCMM37PR | DCMM37PC | DCMM37PK |
| DD | 50 | DDMM50PF | DDMM50PP | DDMM50PR | DDMM50PC | DDMM50PK |

| | | Commercial Part Numbers | | | | |
|---|---|---|---|---|---|---|
| | | Ø Y 0,76 (.030) | | | Ø Y 1,02 (.040) | |
| Shell Size | Layout | X 3,23 (.127) | X 4,01 (.158) | X 4,65 (.183) | X 3,23 (.127) | X 4,01 (.158) |
| DE | 9 | DEM9PF | DEM9PP | DEM9PR | DEM9PC | DEM9PK |
| DA | 15 | DAM15PF | DAM15PP | DAM15PR | DAM15PC | DAM15PK |
| DB | 25 | DBM25PF | DBM25PP | DBM25PR | DBM25PC | DBM25PK |
| DC | 37 | DCM37PF | DCM37PP | DCM37PR | DCM37PC | DCM37PK |
| DD | 50 | DDM50PF | DDM50PP | DDM50PR | DCM50PC | DDM50PK |

Engaging Face

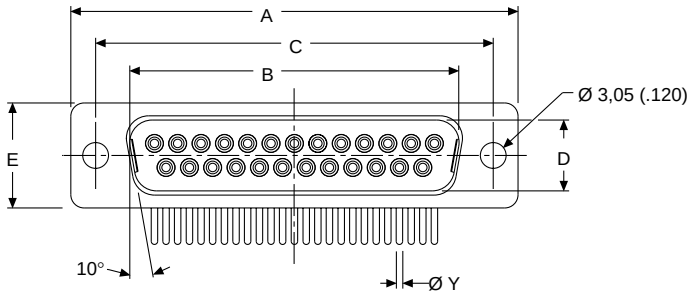


DD Configuration

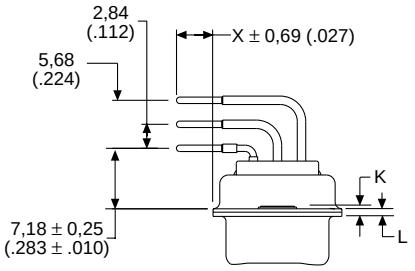


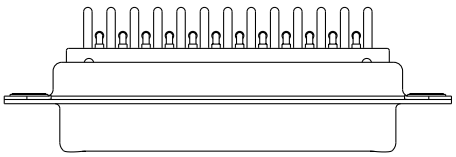

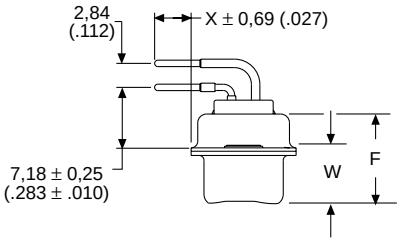


Dimensions

| Shell Size | A ±0,38 (.015) | B ±0,13 (.005) | C ±0,13 (.005) | D ±0,13 (.005) | E ±0,38 (.015) | F ±0,25 (.010) | W ±0,368 (.0145) | W ±0,41 (.016) | K ±0,317 (.0125) | K ±0,25 (.010) | L ±0,25 (.010) |
|---|---|---|---|---|---|---|---|---|---|---|---|
| DE | 30,81 (1.213) | 16,92 (.666) | 24,99 (.984) | 8,36 (.329) | 12,55 (.494) | 10,72 (.422) | 6,693 (.2635) | — | 1,206 (.0475) | — | 0,76 (.030) |
| DA | 39,14 (1.541) | 25,25 (.994) | 33,32 (1.312) | 8,36 (.329) | 12,55 (.494) | 10,72 (.422) | 6,693 (.2635) | — | 1,206 (.0475) | — | 0,76 (.030) |
| DB | 53,04 (2.088) | 38,96 (1.534) | 47,04 (1.852) | 8,36 (.329) | 12,55 (.494) | 10,82 (.426) | — | 6,84 (.269) | — | 1,52 (.060) | 0,99 (.039) |
| DC | 69,32 (2.729) | 55,42 (2.182) | 63,50 (2.500) | 8,36 (.329) | 12,55 (.494) | 10,82 (.426) | — | 6,84 (.269) | — | 1,52 (.060) | 0,99 (.039) |
| DD | 66,93 (2.635) | 52,81 (2.079) | 61,11 (2.406) | 11,07 (.436) | 15,37 (.605) | 10,82 (.426) | — | 6,84 (.269) | — | 1,52 (.060) | 0,99 (.039) |



Dimensions are shown in mm (inch)
Dimensions subject to change

## 90° PC Tail

Receptacle

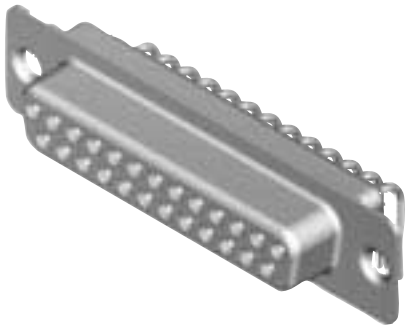

Reader's Resource
For contact cavity arrangements, see page 224.
For P.C. hole patterns, see page 272.
For panel cutouts, see page 221.
For hardware view (Standard), see page 226.

### Part Numbers

| | | Military Part Numbers | | | | |
|---|---|---|---|---|---|---|
| | | Ø Y 0,76 (.030) | | | Ø Y 1,02 (.040) | |
| Shell Size | Layout | X 3,23 (.127) | X 4,01 (.158) | X 4,65 (.183) | X 3,23 (.127) | X 4,01 (.158) |
| DE | 9 | DEMM9SF | DEMM9SP | DEMM9SR | DEMM9SC | DEMM9SK |
| DA | 15 | DAMM15SF | DAMM15SP | DAMM15SR | DAMM15SC | DAMM15SK |
| DB | 25 | DBMM25SF | DBMM25SP | DBMM25SR | DBMM25SC | DBMM25SK |
| DC | 37 | DCMM37SF | DCMM37SP | DCMM37SR | DCMM37SC | DCMM37SK |
| DD | 50 | DDMM50SF | DDMM50SP | DDMM50SR | DDMM50SC | DDMM50SK |

| | | Commercial Part Numbers | | | | |
|---|---|---|---|---|---|---|
| | | Ø Y 0,76 (.030) | | | Ø Y 1,02 (.040) | |
| Shell Size | Layout | X 3,23 (.127) | X 4,01 (.158) | X 4,65 (.183) | X 3,23 (.127) | X 4,01 (.158) |
| DE | 9 | DEM9SF | DEM9SP | DEM9SR | DEM9SC | DEM9SK |
| DA | 15 | DAM15SF | DAM15SP | DAM15SR | DAM15SC | DAM15SK |
| DB | 25 | DBM25SF | DBM25SP | DBM25SR | DBM25SC | DBM25SK |
| DC | 37 | DCM37SF | DCM37SP | DCM37SR | DCM37SC | DCM37SK |
| DD | 50 | DDM50SF | DDM50SP | DDM50SR | DDM50SC | DDM50SK |

Engaging Face

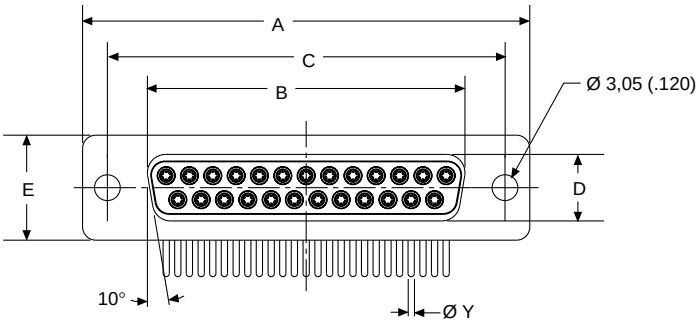


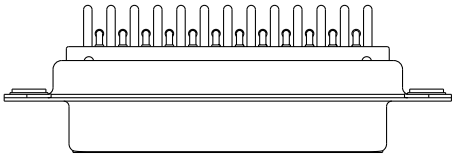

DD Configuration

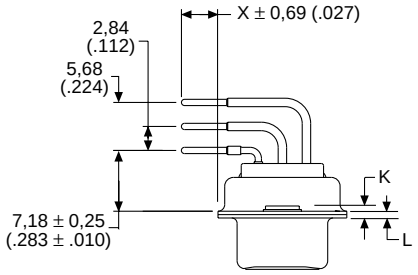


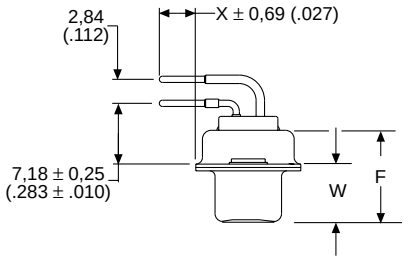


### Dimensions

| Shell Size | A ±0,38 (.015) | B ±0.13 (.005) | C ±0,13 (.005) | D ±0,13 (.005) | E ±0,38 (.015) | F ±0,25 (.010) | W ±0,38 (.015) | K ±0,318 (.0125) | L ±0,25 (.010) |
|---|---|---|---|---|---|---|---|---|---|
| DE | 30,81 (1.213) | 16,33 (.643) | 24,99 (.984) | 7,90 (.311) | 12,55 (.494) | 10,90 (.429) | 6,94 (.273) | 1,206 (.0475) | 0,76 (.030) |
| DA | 39,14 (1.541) | 24,66 (.971) | 33,32 (1.312) | 7,90 (.311) | 12,55 (.494) | 10,90 (.429) | 6,94 (.273) | 1,206 (.0475) | 0,76 (.030) |
| DB | 53,04 (2.088) | 38,38 (1.511) | 47,04 (1.852) | 7,90 (.311) | 12,55 (.494) | 10,90 (.429) | 6,94 (.273) | 1,206 (.0475) | 0,76 (.030) |
| DC | 69,32 (2.729) | 54,84 (2.159) | 63,50 (2.500) | 7,90 (.311) | 12,55 (.494) | 10,90 (.429) | 6,94 (.273) | 1,206 (.0475) | 0,76 (.030) |
| DD | 66,93 (2.635) | 52,42 (2.064) | 61,11 (2.406) | 10,74 (.423) | 15,37 (.605) | 10,90 (.429) | 6,94 (.273) | 1,206 (.0475) | 0,76 (.030) |

## Straight PC Tail

Plug

Reader's Resource

For contact cavity arrangements, see page 224.
For P.C. hole patterns, see page 274.
For panel cutouts, see page 221.
For hardware views (Standard), see page 226.

Part Numbers

| | | Military Part Numbers | | | | | |
|---|---|---|---|---|---|---|---|
| | | Ø Y 0,76 (.030) | | | Ø Y 1,02 (.040) | | |
| Shell Size | Layout | X 3,23 (.127) | X 4,01 (.158) | X 4,65 (.183) | X 3,23 (.127) | X 4,01 (.158) | X 4,65 (.183) |
| DE | 9 | DEMM9PE* | DEMM9PM* | DEMM9PZ* | DEMM9PB | DEMM9PH | DEMM9PX* |
| DA | 15 | DAMM15PE* | DAMM15PM* | DAMM15PZ* | DAMM15PB | DAMM15PH | DAMM15PX* |
| DB | 25 | DBMM25PE* | DBMM25PM* | DBMM25PZ* | DBMM25PB | DBMM25PH | DBMM25PX* |
| DC | 37 | DCMM37PE* | DCMM37PM* | DCMM37PZ* | DCMM37PB | DCMM37PH | DCMM37PX* |
| DD | 50 | DDMM50PE* | DDMM50PM* | DDMM50PZ* | DDMM50PB | DDMM50PH | DDMM50PX* |

Note: Spacers (shipped loose) provided only on parts marked *

| | | Commercial Part Numbers | | | | | |
|---|---|---|---|---|---|---|---|
| | | Ø Y 0,76 (.030) | | | Ø Y 1,02 (.040) | | |
| Shell Size | Layout | X 3,23 (.127) | X 4,01 (.158) | X 4,65 (.183) | X 3,23 (.127) | X 4,01 (.158) | X 4,65 (.183) |
| DE | 9 | DEM9PE | DEM9PM | DEM9PZ | DEM9PB | DEM9PH | DEM9PX |
| DA | 15 | DAM15PE | DAM15PM | DAM15PZ | DAM15PB | DAM15PH | DAM15PX |
| DB | 25 | DBM25PE | DBM25PM | DBM25PZ | DBM25PB | DBM25PH | DBM25PX |
| DC | 37 | DCM37PE | DCM37PM | DCM37PZ | DCM37PB | DCM37PH | DCM37PX |
| DD | 50 | DDM50PE | DDM50PM | DDM50PZ | DDM50PB | DDM50PH | DDM50PX |

Engaging Face

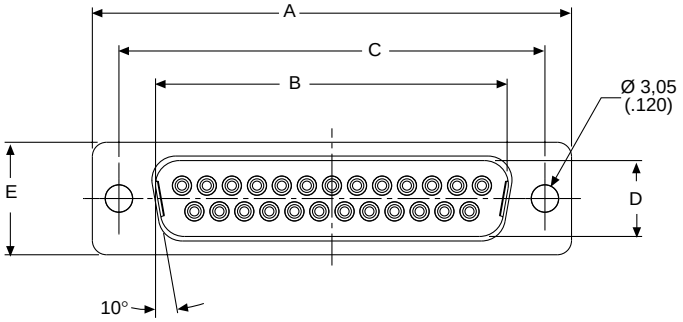


DD Configuration

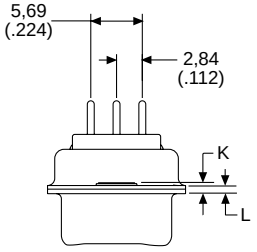


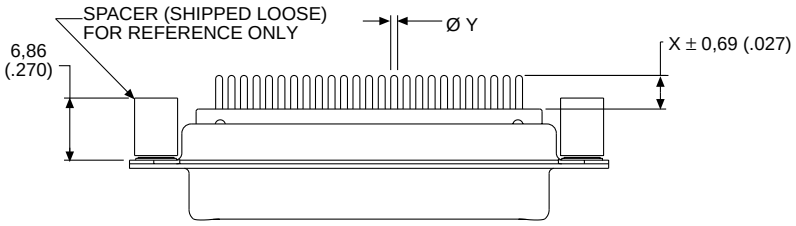


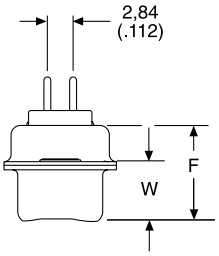


Dimensions

| Shell Size | A ±0,38 (.015) | B ±0,13 (.005) | C ±0,13 (.005) | D ±0,13 (.005) | E ±0,38 (.015) | F ±0,25 (.010) | W ±0,368 (.0145) | W ±0,41 (.016) | K ±0,317 (.0125) | K ±0,25 (.010) | L ±0,25 (.010) |
|---|---|---|---|---|---|---|---|---|---|---|---|
| DE | 30,81 (1.213) | 16,92 (.666) | 24,99 (.984) | 8,36 (.329) | 12,55 (.494) | 10,72 (.422) | 6,693 (.2635) | — | 1,206 (.0475) | — | 0,76 (.030) |
| DA | 39,14 (1.541) | 25,25 (.994) | 33,32 (1.312) | 8,36 (.329) | 12,55 (.494) | 10,72 (.422) | 6,693 (.2635) | — | 1,206 (.0475) | — | 0,76 (.030) |
| DB | 53,04 (2.088) | 38,96 (1.534) | 47,04 (1.852) | 8,36 (.329) | 12,55 (.494) | 10,82 (.426) | — | 6,84 (.269) | — | 1,52 (.060) | 0,99 (.039) |
| DC | 69,32 (2.729) | 55,42 (2.182) | 63,50 (2.500) | 8,36 (.329) | 12,55 (.494) | 10,82 (.426) | — | 6,84 (.269) | — | 1,52 (.060) | 0,99 (0.39) |
| DD | 66,93 (2.635) | 52,81 (2.079) | 61,11 (2.406) | 11,07 (.436) | 15,37 (.605) | 10,82 (.426) | — | 6,84 (.269) | — | 1,52 (.060) | 0,99 (.039) |



ITT Cannon

Dimensions are shown in mm (inch)
Dimensions subject to change

## Straight PC Tail

Receptacle

Reader's Resource

For contact cavity arrangements, see page 224.
For P.C. hole patterns, see page 274.
For panel cutouts, see page 221.
For hardware views (Standard), see page 226.

### Part Numbers

| | | Military Part Numbers | | | | | |
|---|---|---|---|---|---|---|---|
| | | Ø Y 0,76 (.030) | | | Ø Y 1,02 (.040) | | |
| Shell Size | Layout | X 3,23 (.127) | X 4,01 (.158) | X 4,65 (.183) | X 3,23 (.127) | X 4,01 (.158) | X 4,65 (.183) |
| DE | 9 | DEMM9SE* | DEMM9SM* | DEMM9SZ* | DEMM9SB | DEMM9SH | DEMM9SX* |
| DA | 15 | DAMM15SE* | DAMM15SM* | DAMM15SZ* | DAMM15SB | DAMM15SH | DAMM15SX* |
| DB | 25 | DBMM25SE* | DBMM25SM* | DBMM25SZ* | DBMM25SB | DBMM25SH | DBMM25SX* |
| DC | 37 | DCMM37SE* | DCMM37SM* | DCMM37SZ* | DCMM37SB | DCMM37SH | DCMM37SX* |
| DD | 50 | DDMM50SE* | DDMM50SM* | DDMM50SZ* | DDMM50SB | DDMM50SH | DDMM50SX* |

Note: Spacers (shipped loose) provided only on parts marked *

| | | Commercial Part Numbers | | | | | |
|---|---|---|---|---|---|---|---|
| | | Ø Y 0,76 (.030) | | | Ø Y 1,02 (.040) | | |
| Shell Size | Layout | X 3,23 (.127) | X 4,01 (.158) | X 4,65 (.183) | X 3,23 (.127) | X 4,01 (.158) | X 4,65 (.183) |
| DE | 9 | DEM9SE | DEM9SM | DEM9SZ | DEM9SB | DEM9SH | DEM9SX |
| DA | 15 | DAM15SE | DAM15SM | DAM15SZ | DAM15SB | DAM15SH | DAM15SX |
| DB | 25 | DBM25SE | DBM25SM | DBM25SZ | DBM25SB | DBM25SH | DBM25SX |
| DC | 37 | DCM37SE | DCM37SM | DCM37SZ | DCM37SB | DCM37SH | DCM37SX |
| DD | 50 | DDM50SE | DDM50SM | DDM50SZ | DDM50SB | DDM50SH | DDM50SX |

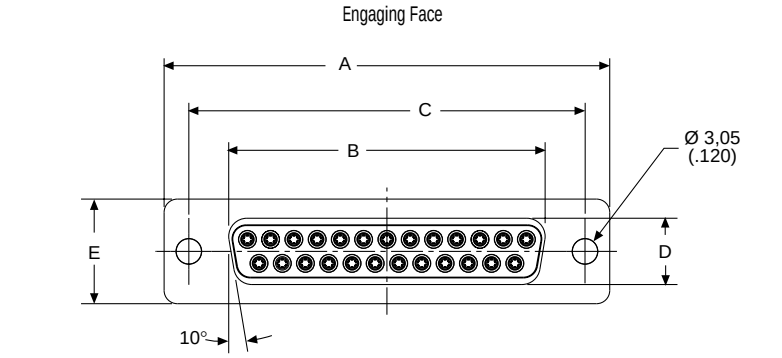


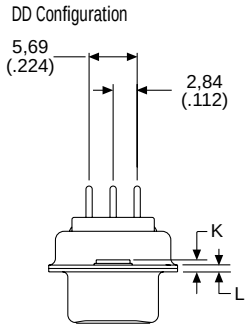


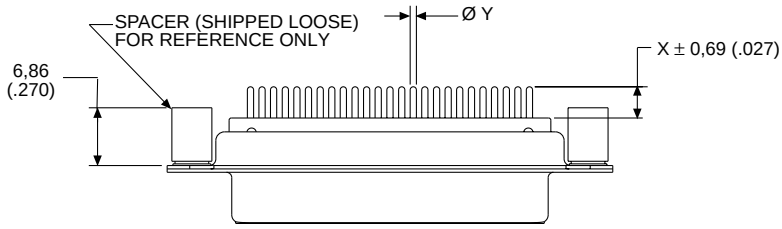


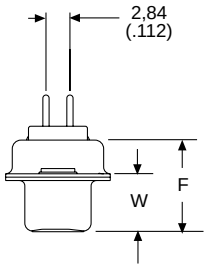


### Dimensions

| Shell Size | A ±0,38 (.015) | B ±0,13 (.005) | C ±0,13 (.005) | D ±0,13 (.005) | E ±0,38 (.015) | F ±0,25 (.010) | W ±0,38 (.015) | K ±0,318 (.0125) | L ±0,25 (.010) |
|---|---|---|---|---|---|---|---|---|---|
| DE | 30,81 (1.213) | 16,33 (.643) | 24,99 (.984) | 7,90 (.311) | 12,55 (.494) | 10,90 (.429) | 6,94 (.273) | 1,206 (.0475) | 0,76 (.030) |
| DA | 39,14 (1.541) | 24,66 (.971) | 33,32 (1.312) | 7,90 (.311) | 12,55 (.494) | 10,90 (.429) | 6,94 (.273) | 1,206 (.0475) | 0,76 (.030) |
| DB | 53,04 (2.088) | 38,38 (1.511) | 47,04 (1.852) | 7,90 (.311) | 12,55 (.494) | 10,90 (.429) | 6,94 (.273) | 1,206 (.0475) | 0,76 (.030) |
| DC | 69,32 (2.729) | 54,84 (2.159) | 63,50 (2.500) | 7,90 (.311) | 12,55 (.494) | 10,90 (.429) | 6,94 (.273) | 1,206 (.0475) | 0,76 (.030) |
| DD | 66,93 (2.635) | 52,42 (2.064) | 61,11 (2.406) | 10,74 (.423) | 15,37 (.605) | 10,90 (.429) | 6,94 (.273) | 1,206 (.0475) | 0,76 (.030) |

## Wrap Post Connector

Plug

Reader's Resource
For contact cavity arrangements, see page 224.
For P.C. hole patterns, see page 274.
For panel cutouts, see page 221.
For hardware views (Standard), see page 226.

Part Numbers

| Shell Size | Layout | Military Part Numbers | |
|---|---|---|---|
| DE | 9 | DEMM9PF179 | DEMM9PF179A |
| DA | 15 | DAMM15PF179 | DAMM15PF179A |
| DB | 25 | DBMM25PF179 | DBMM25PF179A |
| DC | 37 | DCMM37PF179 | DCMM37PF179A |
| DD | 50 | DDMM50PF179 | DDMM50PF179A |

| Shell Size | Layout | Commercial Part Numbers | |
|---|---|---|---|
| DE | 9 | DEM9PF179 | DEM9PF179A |
| DA | 15 | DAM15PF179 | DAM15PF179A |
| DB | 25 | DBM25PF179 | DBM25PF179A |
| DC | 37 | DCM37PF179 | DCM37PF179A |
| DD | 50 | DDM50PF179 | DDM50PF179A |

| Modification Code | Number of Wraps | X ±0,51 (.020) |
|---|---|---|
| F179 | 2 | 9,60 (.378) |
| F179A | 3 | 12,90 (.508) |

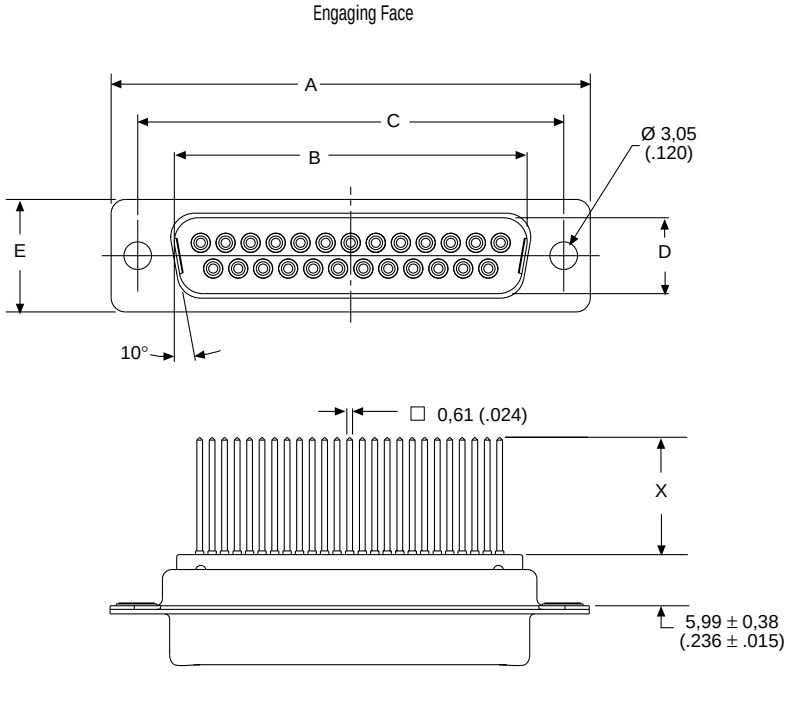


DD Configuration

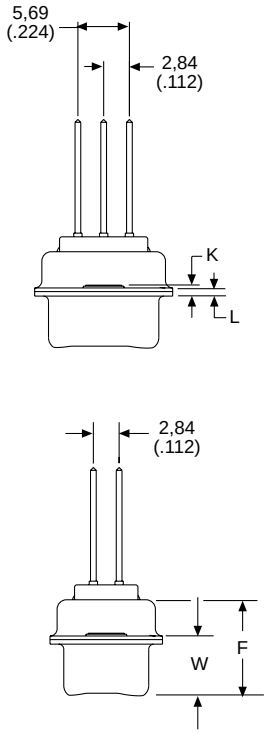


Dimensions

| Shell Size | A ±0,38 (.015) | B ±0,13 (.005) | C ±0,13 (.005) | D ±0,13 (.005) | E ±0,38 (.015) | F ±0,25 (.010) | W ±0,368 (.0145) | W ±0,41 (.016) | K ±0,317 (.0125) | K ±0,25 (.010) | L ±0,25 (.010) |
|---|---|---|---|---|---|---|---|---|---|---|---|
| DE | 30,81 (1.213) | 16,92 (.666) | 24,99 (.984) | 8,36 (.329) | 12,55 (.494) | 10,72 (.422) | 6,693 (.2635) | — | 1,206 (.0475) | — | 0,76 (.030) |
| DA | 39,14 (1.541) | 25,25 (.994) | 33,32 (1.312) | 8,36 (.329) | 12,55 (.494) | 10,72 (.422) | 6,693 (.2635) | — | 1,206 (.0475) | — | 0,76 (.030) |
| DB | 53,04 (2.088) | 38,96 (1.534) | 47,04 (1.852) | 8,36 (.329) | 12,55 (.494) | 10,82 (.426) | — | 6,84 (.269) | — | 1,52 (.060) | 0,99 (.039) |
| DC | 69,32 (2.729) | 55,42 (2.182) | 63,50 (2.500) | 8,36 (.329) | 12,55 (.494) | 10,82 (.426) | — | 6,84 (.269) | — | 1,52 (.060) | 0,99 (.039) |
| DD | 66,93 (2.635) | 52,81 (2.079) | 61,11 (2.406) | 11,07 (.436) | 15,37 (.605) | 10,82 (.426) | — | 6,84 (.269) | — | 1,52 (.060) | 0,99 (.039) |



Dimensions are shown in mm (inch)
Dimensions subject to change

## Wrap Post Connector

Receptacle

Reader's Resource

For contact cavity arrangements, see page 224.
For P.C. hole patterns, see page 274.
For panel cutouts, see page 221.
For hardware views (Standard), see page 226.

Part Numbers

| Shell Size | Layout | Military Part Numbers | |
|---|---|---|---|
| DE | 9 | DEMM9SF179 | DEMM9SF179A |
| DA | 15 | DAMM15SF179 | DAMM15SF179A |
| DB | 25 | DBMM25SF179 | DBMM25SF179A |
| DC | 37 | DCMM37SF179 | DCMM37SF179A |
| DD | 50 | DDMM50SF179 | DDMM50SF179A |

| Shell Size | Layout | Commercial Part Numbers | |
|---|---|---|---|
| DE | 9 | DEM9SF179 | DEM9SF179A |
| DA | 15 | DAM15SF179 | DAM15SF179A |
| DB | 25 | DBM25SF179 | DBM25SF179A |
| DC | 37 | DCM37SF179 | DCM37SF179A |
| DD | 50 | DDM50SF179 | DDM50SF179A |

| Modification Code | Number of Wraps | X ±0,51 (.020) |
|---|---|---|
| F179 | 2 | 9,60 (.378) |
| F179A | 3 | 12,90 (.508) |

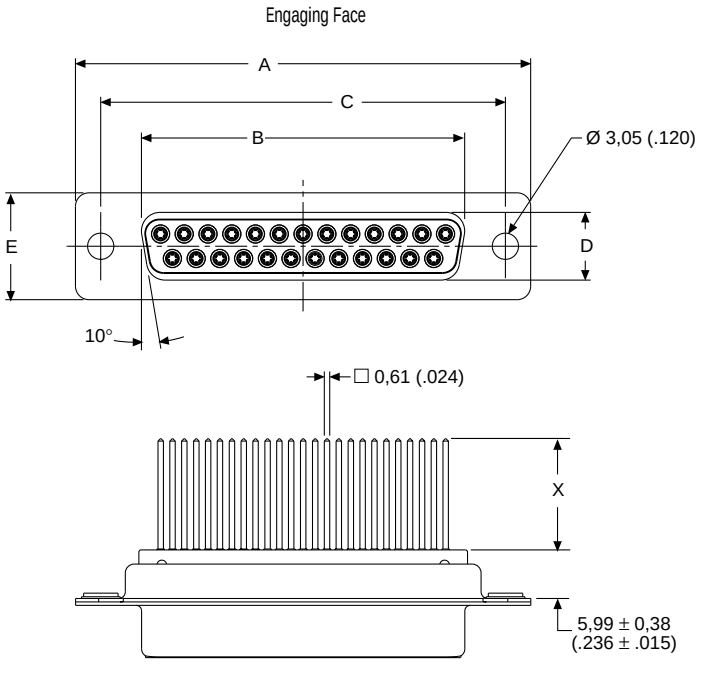


DD Configuration

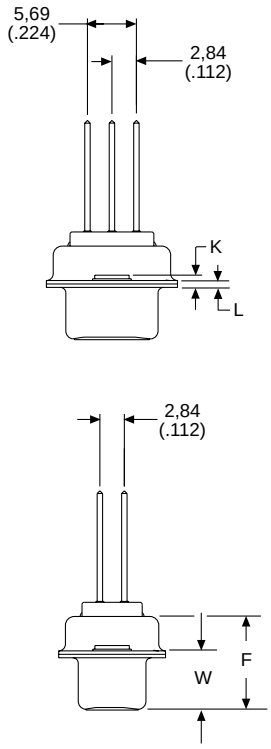


Dimensions

| Shell Size | A ±0,38 (.015) | B ±0,13 (.005) | C ±0,13 (.005) | D ±0,13 (.005) | E ±0,38 (.015) | F ±0,25 (.010) | W ±0,38 (.015) | K ±0,318 (.0125) | L ±0,25 (.010) |
|---|---|---|---|---|---|---|---|---|---|
| DE | 30,81 (1.213) | 16,33 (.643) | 24,99 (.984) | 7,90 (.311) | 12,55 (.494) | 10,90 (.429) | 6,94 (.273) | 1,206 (.0475) | 0,76 (.030) |
| DA | 39,14 (1.541) | 24,66 (.971) | 33,32 (1.312) | 7,90 (.311) | 12,55 (.494) | 10,90 (.429) | 6,94 (.273) | 1,206 (.0475) | 0,76 (.030) |
| DB | 53,04 (2.088) | 38,38 (1.511) | 47,04 (1.852) | 7,90 (.311) | 12,55 (.494) | 10,90 (.429) | 6,94 (.273) | 1,206 (.0475) | 0,76 (.030) |
| DC | 69,32 (2.729) | 54,84 (2.159) | 63,50 (2.500) | 7,90 (.311) | 12,55 (.494) | 10,90 (.429) | 6,94 (.273) | 1,206 (.0475) | 0,76 (.030) |
| DD | 66,93 (2.635) | 52,42 (2.064) | 61,11 (2.406) | 10,74 (.423) | 15,37 (.605) | 10,90 (.429) | 6,94 (.273) | 1,206 (.0475) | 0,76 (.030) |

## Solder Cup Connector

Plug

Reader's Resource

For contact cavity arrangements, see page 224.
For panel cutouts, see page 221.
For hardware views (Standard), see page 226.

Part Numbers

| Shell Size | Layout | Military Part Numbers: Through Hole | Dual Float Mount | Clinch Nut #4-40 UNC |
|---|---|---|---|---|
| DE | 9 | DEMM9P | DEMMY9P | DEMME9P |
| DA | 15 | DAMM15P | DAMMY15P | DAMME15P |
| DB | 25 | DBMM25P | DBMMY25P | DBMME25P |
| DC | 37 | DCMM37P | DCMMY37P | DCMME37P |
| DD | 50 | DDMM50P | DDMMY50P | DDMME50P |

| Shell Size | Layout | Commercial Part Numbers: Through Hole | Dual Float Mount | Clinch Nut #4-40 UNC |
|---|---|---|---|---|
| DE | 9 | DEM9P | DEMY9P | DEME9P |
| DA | 15 | DAM15P | DAMY15P | DAME15P |
| DB | 25 | DBM25P | DBMY25P | DBME25P |
| DC | 37 | DCM37P | DCMY37P | DCME37P |
| DD | 50 | DDM50P | DDMY50P | DDME50P |

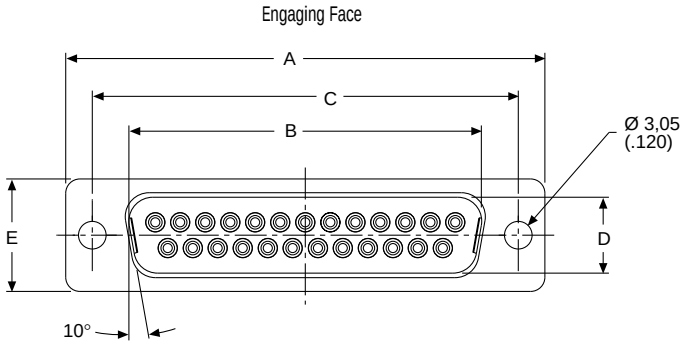


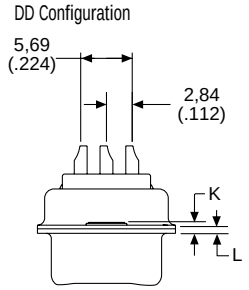


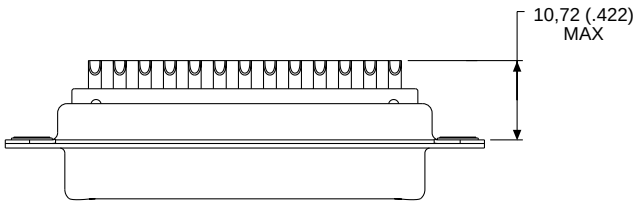


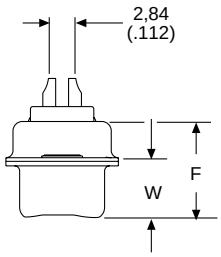


Dimensions

| Shell Size | A ±0,38 (.015) | B ±0,13 (.005) | C ±0,13 (.005) | D ±0,13 (.005) | E ±0,38 (.015) | F ±0,25 (.010) | W ±0,368 (.0145) | W ±0,41 (.016) | K ±0,317 (.0125) | K ±0,25 (.010) | L ±0,25 (.010) |
|---|---|---|---|---|---|---|---|---|---|---|---|
| DE | 30,81 (1.213) | 16,92 (.666) | 24,99 (.984) | 8,36 (.329) | 12,55 (.494) | 10,72 (.422) | 6,693 (.2635) | — | 1,206 (.0475) | — | 0.76 (.030) |
| DA | 39,14 (1.541) | 25,25 (.994) | 33,32 (1.312) | 8,36 (.329) | 12,55 (.494) | 10,72 (.422) | 6,693 (.2635) | — | 1,206 (.0475) | — | 0,76 (.030) |
| DB | 53,04 (2.088) | 38,96 (1.534) | 47,04 (1.852) | 8,36 (.329) | 12,55 (.494) | 10,82 (.426) | — | 6,84 (.269) | — | 1,52 (.060) | 0,99 (.039) |
| DC | 69,32 (2.729) | 55,42 (2.182) | 63,50 (2.500) | 8,36 (.329) | 12,55 (.494) | 10,82 (.426) | — | 6,84 (.269) | — | 1,52 (.060) | 0,99 (.039) |
| DD | 66,93 (2.635) | 52,81 (2.079) | 61,11 (2.406) | 11,07 (.436) | 15,37 (.605) | 10,82 (.426) | — | 6,84 (.269) | — | 1,52 (.060) | 0,99 (.039) |



ITT Cannon

Dimensions are shown in mm (inch)
Dimensions subject to change

## Solder Cup Connector

Receptacle

Reader's Resource

For contact cavity arrangements, see page 224.
For panel cutouts, see page 221.
For hardware views (Standard), see page 226.

Part Numbers

| Shell Size | Layout | Military Part Numbers: Through Hole | Dual Float Mount | Clinch Nut #4-40 UNC |
|---|---|---|---|---|
| DE | 9 | DEMM9S | DEMMY9S | DEMME9S |
| DA | 15 | DAMM15S | DAMMY15S | DAMME15S |
| DB | 25 | DBMM25S | DBMMY25S | DBMME25S |
| DC | 37 | DCMM37S | DCMMY37S | DCMME37S |
| DD | 50 | DDMM50S | DDMMY50S | DDMME50S |

| Shell Size | Layout | Commercial Part Numbers: Through Hole | Dual Float Mount | Clinch Nut #4-40 UNC |
|---|---|---|---|---|
| DE | 9 | DEM9S | DEMY9S | DEME9S |
| DA | 15 | DAM15S | DAMY15S | DAME15S |
| DB | 25 | DBM25S | DBMY25S | DBME25S |
| DC | 37 | DCM37S | DCMY37S | DCME37S |
| DD | 50 | DDM50S | DDMY50S | DDME50S |

Engaging Face

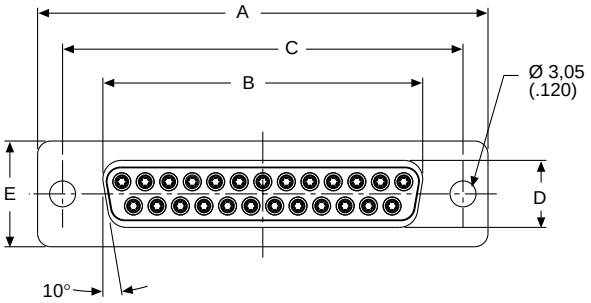


DD Configuration

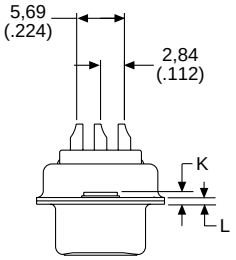


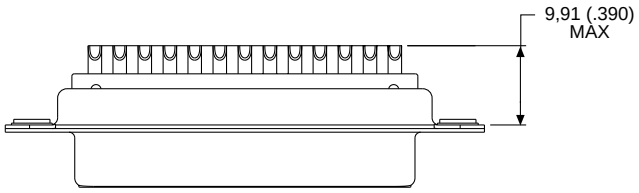


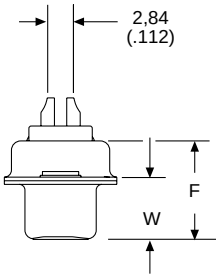


Dimensions

| Shell Size | A ±0,38 (.015) | B ±0,13 (.005) | C ±0,13 (.005) | D ±0,13 (.005) | E ±0,38 (.015) | F ±0,25 (.010) | W ±0,38 (.015) | K ±0,318 (.0125) | L ±0,25 (.010) |
|---|---|---|---|---|---|---|---|---|---|
| DE | 30,81 (1.213) | 16,33 (.643) | 24,99 (.984) | 7,90 (.311) | 12,55 (.494) | 10,90 (.429) | 6,94 (.273) | 1,206 (.0475) | 0,76 (.030) |
| DA | 39,14 (1.541) | 24,66 (.971) | 33,32 (1.312) | 7,90 (.311) | 12,55 (.494) | 10,90 (.429) | 6,94 (.273) | 1,206 (.0475) | 0,76 (.030) |
| DB | 53,04 (2.088) | 38,38 (1.511) | 47,04 (1.852) | 7,90 (.311) | 12,55 (.494) | 10,90 (.429) | 6,94 (.273) | 1,206 (.0475) | 0,76 (.030) |
| DC | 69,32 (2.729) | 54,84 (2.159) | 63,50 (2.500) | 7,90 (.311) | 12,55 (.494) | 10,90 (.429) | 6,94 (.273) | 1,206 (.0475) | 0,76 (.030) |
| DD | 66,93 (2.635) | 52,42 (2.064) | 61,11 (2.406) | 10,74 (.423) | 15,37 (.605) | 10,90 (.429) | 6,94 (.273) | 1,206 (.0475) | 0,76 (.030) |

## 24308-Style Cross Reference

| Military Part Number | ITT Cannon Part Number | Military Part Number | ITT Cannon Part Number | Military Part Number | ITT Cannon Part Number |
|---|---|---|---|---|---|
| M24308/1-1 | DEMM9S | M24308/3-3 | DBMM25P | M24308/6-261 | DBMAMF25SNM |
| M24308/1-2 | DAMM15S | M24308/3-4 | DCMM37P | M24308/6-262 | DCMAMF37SNM |
| M24308/1-3 | DBMM25S | M24308/3-5 | DDMM50P | M24308/6-263 | DDMAMF50SNM |
| M24308/1-4 | DCMM37S | M24308/3-12 | DEMMF9P | M24308/6-270 | DEMAMFT9SNM |
| M24308/1-5 | DDMM50S | M24308/3-13 | DAMMF15P | M24308/6-271 | DAMAMFT15SNM |
| M24308/1-12 | DEMMF9S | M24308/3-14 | DBMMF25P | M24308/6-272 | DBMAMFT25SNM |
| M24308/1-13 | DAMMF15S | M24308/3-15 | DCMMF37P | M24308/6-273 | DCMAMFT37SNM |
| M24308/1-14 | DBMMF25S | M24308/3-16 | DDMMF50P | M24308/6-274 | DDMAMFT50SNM |
| M24308/1-15 | DCMMF37S | M24308/4-1 | DEMAM9P | M24308/6-281 | DEMAM9SNM-FO |
| M24308/1-16 | DDMMF50S | M24308/4-2 | DAMAM15P | M24308/6-282 | DAMAM15SNM-FO |
| M24308/1-23 | DEMMY9S | M24308/4-3 | DBMAM25P | M24308/6-283 | DBMAM25SNM-FO |
| M24308/1-24 | DAMMY15S | M24308/4-4 | DCMAM37P | M24308/6-284 | DCMAM37SNM-FO |
| M24308/1-25 | DBMMY25S | M24308/4-5 | DDMAM50P | M24308/6-285 | DDMAM50SNM-FO |
| M24308/1-26 | DCMMY37S | M24308/4-6 | DEMAMT9P | M24308/6-324 | DEMAMF9SNM-FO |
| M24308/1-27 | DDMMY50S | M24308/4-7 | DAMAMT15P | M24308/6-325 | DAMAMF15SNM-FO |
| M24308/2-1 | DEMAM9S | M24308/4-8 | DBMAMT25P | M24308/6-326 | DBMAMF25SNM-FO |
| M24308/2-2 | DAMAM15S | M24308/4-9 | DCMAMT37P | M24308/6-327 | DCMAMF37SNM-FO |
| M24308/2-3 | DBMAM25S | M24308/4-10 | DDMAMT50P | M24308/6-328 | DDMAMF50SNM-FO |
| M24308/2-4 | DCMAM37S | M24308/4-259 | DEMAM9P-FO | M24308/6-453 | DEMAMY9SNM |
| M24308/2-5 | DDMAM50S | M24308/4-260 | DAMAM15P-FO | M24308/6-454 | DAMAMY15SNM |
| M24308/2-6 | DEMAMT9S | M24308/4-261 | DBMAMF25P-FO | M24308/6-455 | DBMAMY25SNM |
| M24308/2-7 | DAMAMT15S | M24308/4-262 | DCMAM37P-FO | M24308/6-456 | DCMAMY37SNM |
| M24308/2-8 | DBMAMT25S | M24308/4-263 | DDMAM50P-FO | M24308/6-457 | DDMAMY50SNM |
| M24308/2-9 | DCMAMT37S | M24308/4-302 | DEMAMF9P | M24308/6-464 | DDMEMYT9SNM |
| M24308/2-10 | DDMAMT50S | M24308/4-303 | DAMAMF15P | M24308/6-465 | DAMAMYT15SNM |
| M24308/2-23 | DEMAMF9S | M24308/4-304 | DBMAMF25P | M24308/6-466 | DBMAMYT25SNM |
| M24308/2-24 | DAMAMF15S | M24308/4-305 | DCMAMF37P | M24308/6-467 | DCMAMYT37SNM |
| M24308/2-25 | DBMAMF25S | M24308/4-306 | DDMAMF50P | M24308/6-468 | DDMAMYT50SNM |
| M24308/2-26 | DCMAMF37S | M24308/4-313 | DEMAMFT9P | M24308/6-491 | DEMAMY9SNM-FO |
| M24308/2-27 | DDMAMF50S | M24308/4-314 | DAMAMFT15P | M24308/6-492 | DAMAMY15SNM-FO |
| M24308/2-34 | DEMAMFT9S | M24308/4-315 | DBMAMFT25P | M24308/6-493 | DBMAMY25SNM-FO |
| M24308/2-35 | DAMAMFT15S | M24308/4-316 | DCMAMFT37P | M24308/6-494 | DCMAMY37SNM-FO |
| M24308/2-36 | DBMAMFT25S | M24308/4-317 | DDMAMFT50P | M24308/6-495 | DDMAMY50SNM-FO |
| M24308/2-37 | DCMAMFT37S | M24308/4-324 | DEMAMF9P-FO | M24308/7-1 | DEMM9PNM |
| M24308/2-38 | DDMAMFT50S | M24308/4-325 | DAMAMF15P-FO | M24308/7-2 | DAMM15PNM |
| M24308/2-281 | DEMAM9S-FO | M24308/4-326 | DBMAMF25P-FO | M24308/7-3 | DBMM25PNM |
| M24308/2-282 | DAMAM15S-FO | M24308/4-327 | DCMAMF37P-FO | M24308/7-4 | DCMM37PNM |
| M24308/2-283 | DBMAM25S-FO | M24308/4-328 | DDMAMF50P-FO | M24308/7-5 | DDMM50PNM |
| M24308/2-284 | DCMAM37S-FO | M24308/5-1 | DEMM9SNM | M24308/7-12 | DEMMF9PNM |
| M24308/2-285 | DDMAM50S-FO | M24308/5-2 | DAMM15SNM | M24308/7-13 | DAMMF15PNM |
| M24308/2-292 | DEMAMF9S-FO | M24308/5-3 | DBMM25SNM | M24308/7-14 | DBMMF25PNM |
| M24308/2-293 | DAMAMF15S-FO | M24308/5-4 | DCMM37SNM | M24308/7-15 | DCMMF37PNM |
| M24308/2-294 | DBMAMF25S-FO | M24308/5-5 | DDMM50SNM | M24308/7-16 | DDMMF50PNM |
| M24308/2-295 | DCMAMF37S-FO | M24308/5-12 | DEMMF9SNM | M24308/8-1 | DEMAM9PNM |
| M24308/2-296 | DDMAMF50S-FO | M24308/5-13 | DAMMF15SNM | M24308/8-2 | DAMAM15PNM |
| M24308/2-335 | DBMAMR25S | M24308/5-14 | DBMMF25SNM | M24308/8-3 | DBMAM25PNM |
| M24308/2-336 | DCMAMR37S | M24308/5-15 | DCMMF37SNM | M24308/8-4 | DCMAM37PNM |
| M24308/2-341 | DAMAMR15S | M24308/5-16 | DDMMF50SNM | M24308/8-5 | DDMAM50PNM |
| M24308/2-342 | DEMAMY9S | M24308/5-23 | DDMMY9SNM | M24308/8-6 | DEMAMT9PNM |
| M24308/2-343 | DAMAMY15S | M24308/5-24 | DAMMY15SNM | M24308/8-7 | DAMAMT15PNM |
| M24308/2-344 | DBMAMY25S | M24308/5-25 | DBMMY25SNM | M24308/8-8 | DBMAMT25PNM |
| M24308/2-345 | DCMAMY37S | M24308/5-26 | DCMMY37SNM | M24308/8-9 | DCMAMT37PNM |
| M24308/2-346 | DDMAMY50S | M24308/5-27 | DDMMY50SNM | M24308/8-10 | DDMAMT50PNM |
| M24308/2-353 | DEMAMYT9S | M24308/6-1 | DEMAM9SNM | M24308/8-259 | DEMAM9PNM-FO |
| M24308/2-354 | DAMAMYT15S | M24308/6-2 | DAMAM15SNM | M24308/8-260 | DAMAM15PNM-FO |
| M24308/2-355 | DBMAMYT25S | M24308/6-3 | DBMAM25SNM | M24308/8-261 | DBMAM25PNM-FO |
| M24308/2-356 | DCMAMYT37S | M24308/6-4 | DCMAM37SNM | M24308/8-262 | DCMAM37PNM-FO |
| M24308/2-357 | DDMAMYT50S | M24308/6-5 | DDMAM50SNM | M24308/8-263 | DDMAM50PNM-FO |
| M24308/2-482 | DEMAMY9S-FO | M24308/6-6 | DEMAMT9SNM | M24308/8-302 | DEMAMF9PNM |
| M24308/2-483 | DEMAMY15S-FO | M24308/6-7 | DAMAMT15SNM | M24308/8-303 | DAMAMF15PNM |
| M24308/2-484 | DEMAMY25S-FO | M24308/6-8 | DBMAMT25SNM | M24308/8-304 | DBMAMF25PNM |
| M24308/2-485 | DCMAMY37S-FO | M24308/6-9 | DCMAMT37SNM | M24308/8-305 | DCMAMF37PNM |
| M24308/2-486 | DDMAMY50S-FO | M24308/6-10 | DDMAMT50SNM | M24308/8-306 | DDMAMF50PNM |
| M24308/3-1 | DEMM9P | M24308/6-259 | DEMAMF9SNM | M24308/8-313 | DEMAMFT9PNM |
| M24308/3-2 | DAMM15P | M24308/6-260 | DAMAMF15SNM | M24308/8-314 | DAMAMFT15PNM |



Dimensions are shown in mm (inch)
Dimensions subject to change

## 24308-Style Cross Reference

| Military Part Number | ITT Cannon Part Number | Military Part Number | ITT Cannon Part Number | Military Part Number | ITT Cannon Part Number |
|---|---|---|---|---|---|
| M24308/8-315 | DBMAMFT25PNM | M24308/23-21 | DBMM25SX | M24308/24-15 | DBMM25PH |
| M24308/8-316 | DCMAMFT37PNM | M24308/23-22 | DCMM37SX | M24308/24-16 | DCMM37PH |
| M24308/8-317 | DDMAMFT50PNM | M24308/23-23 | DDMM50SX | M24308/24-17 | DDMM50PH |
| M24308/8-324 | DEMAMF9PNM-FO | M24308/23-25 | DEMM9SD | M24308/24-19 | DEMM9PX |
| M24308/8-325 | DAMAMF15PNM-FO | M24308/23-26 | DAMM15SD | M24308/24-20 | DAMM15PX |
| M24308/8-326 | DBMAMF25PNM-FO | M24308/23-27 | DBMM25SD | M24308/24-21 | DBMM25PX |
| M24308/8-327 | DCMAMF37PNM-FO | M24308/23-28 | DCMM37SD | M24308/24-22 | DCMM37PX |
| M24308/8-328 | DDMAMF50PNM-FO | M24308/23-29 | DDMM50SD | M24308/24-23 | DDMM50PX |
| M24308/9-1 | DEH9P002 | M24308/23-31 | DEMM9SL | M24308/24-25 | DEMM9PD |
| M24308/9-2 | DAH15P002 | M24308/23-32 | DAMM15SL | M24308/24-26 | DAMM15PD |
| M24308/9-3 | DBH25P002 | M24308/23-33 | DBMM25SL | M24308/24-27 | DBMM25PD |
| M24308/9-4 | DCH37P002 | M24308/23-34 | DCMM37SL | M24308/24-28 | DCMM37PD |
| M24308/9-5 | DDH50P002 | M24308/23-35 | DDMM50SL | M24308/24-29 | DDMM50PD |
| M24308/9-6 | DEH9P001 | M24308/23-37 | DEMM9SA | M24308/24-31 | DEMM9PL |
| M24308/9-7 | DAH15P001 | M24308/23-38 | DAMM15SA | M24308/24-32 | DAMM15PL |
| M24308/9-8 | DBH25P001 | M24308/23-39 | DBMM25SA | M24308/24-33 | DBMM25PL |
| M24308/9-9 | DCH37P001 | M24308/23-40 | DCMM37SA | M24308/24-34 | DCMM37PL |
| M24308/9-10 | DDH50P001 | M24308/23-41 | DDMM50SA | M24308/24-35 | DDMM50PL |
| M24308/9-11 | DEH9P202 | M24308/23-43 | DEMM9SG | M24308/24-37 | DEMM9PA |
| M24308/9-12 | DAH15P202 | M24308/23-44 | DAMM15SG | M24308/24-38 | DAMM15PA |
| M24308/9-13 | DBH25P202 | M24308/23-45 | DBMM25SG | M24308/24-39 | DBMM25PA |
| M24308/9-14 | DCH37P202 | M24308/23-46 | DCMM37SG | M24308/24-40 | DCMM37PA |
| M24308/9-15 | DDH50P202 | M24308/23-47 | DDMM50SG | M24308/24-41 | DDMM50PA |
| M24308/9-16 | DEH9P201 | M24308/23-49 | DEMM9SS | M24308/24-43 | DEMM9PG |
| M24308/9-17 | DAH15P201 | M24308/23-50 | DAMM15SS | M24308/24-44 | DAMM15PG |
| M24308/9-18 | DBH25P201 | M24308/23-51 | DBMM25SS | M24308/24-45 | DBMM25PG |
| M24308/9-19 | DCH37P201 | M24308/23-52 | DCMM37SS | M24308/24-46 | DCMM37PG |
| M24308/9-20 | DDH50P201 | M24308/23-53 | DDMM50SS | M24308/24-47 | DDMM50PG |
| M24308/23-1 | DEMM9SM | M24308/23-55 | DEMM9SW | M24308/24-49 | DEMM9PS |
| M24308/23-2 | DAMM15SM | M24308/23-56 | DAMM15SW | M24308/24-50 | DAMM15PS |
| M24308/23-3 | DBMM25SM | M24308/23-57 | DBMM25SW | M24308/24-51 | DBMM25PS |
| M24308/23-4 | DCMM37SM | M24308/23-58 | DCMM37SW | M24308/24-52 | DCMM37PS |
| M24308/23-5 | DDMM50SM | M24308/23-59 | DDMM50SW | M24308/24-53 | DDMM50PS |
| M24308/23-7 | DEMM9SZ | M24308/24-1 | DEMM9PM | M24308/24-55 | DEMM9PW |
| M24308/23-8 | DAMM15SZ | M24308/24-2 | DAMM15PM | M24308/24-56 | DAMM15PW |
| M24308/23-9 | DBMM25SZ | M24308/24-3 | DBMM25PM | M24308/24-57 | DBMM25PW |
| M24308/23-10 | DCMM37SZ | M24308/24-4 | DCMM37PM | M24308/24-58 | DCMM37PW |
| M24308/23-11 | DDMM50SZ | M24308/24-5 | DDMM50PM | M24308/24-59 | DDMM50PW |
| M24308/23-13 | DEMM9SH | M24308/24-7 | DEMM9PZ | M24308/26-1 | D20418-2 |
| M24308/23-14 | DAMM15SH | M24308/24-8 | DAMM15PZ | M24308/26-2 | D20418-39 |
| M24308/23-15 | DBMM25SH | M24308/24-9 | DBMM25PZ | | |
| M24308/23-16 | DCMM37SH | M24308/24-10 | DCMM37PZ | | |
| M24308/23-17 | DDMM50SH | M24308/24-11 | DDMM50PZ | | |
| M24308/23-19 | DEMM9SX | M24308/24-13 | DEMM9PH | | |
| M24308/23-20 | DAMM15SX | M24308/24-14 | DAMM15PH | | |

## MIL-C-39029 Crimp Contacts

| Military Part Number | ITT Cannon Part Number | Contact Size | Contact Style | Product Line | MIL Specification |
|---|---|---|---|---|---|
| M39029/63-368 | 031-1007-078 | 20 | Socket | D*MA | 24308-Style |
| M39029/64-369 | 330-5291-097 | 20 | Pin | D*MA | 24308-Style |

## HE501/D*M Cross Reference

| HE501 Part Number | ITT Cannon Part Number | HE501 Part Number | ITT Cannon Part Number | HE501 Part Number | ITT Cannon Part Number |
|---|---|---|---|---|---|
| HE501N09AS3 | DEM9S | HE501N9KS33 | DEM9SF179A | HE501N09YP4 | DEM9POL3 |
| HE501N15AS3 | DAM15S | HE501N15KS33 | DAM15SF179A | HE501N15YP4 | DAM15POL3 |
| HE501N25AS3 | DBM25S | HE501N25KS33 | DBM25SF179A | HE501N25YP4 | DBM25POL3 |
| HE501N37AS3 | DCM37S | HE501N37KS33 | DCM37SF179A | HE501N37YP4 | DCM37POL3 |
| HE501N50AS3 | DDM50S | HE501N50KS33 | DDM50SF179A | HE501N50YP4 | DDM50POL3 |
| HE501F09AS3 | DEMY9S | HE501N09AP | DEM9P | HE501P09VP6E | DEM9P1A5N |
| HE501F15AS3 | DAMY15S | HE501N15AP | DAM15P | HE501P15VP6E | DAM15P1A5N |
| HE501F25AS3 | DBMY25S | HE501N25AP | DBM25P | HE501P25VP6E | DBM25P1A5N |
| HE501F37AS3 | DCMY37S | HE501N37AP | DCM37P | HE501P37VP6E | DCM39P1A5N |
| HE501F50AS3 | DDMY50S | HE501N50AP | DDM50P | HE501P50VP6E | DDM50P1A5N |
| HE501N09YS43 | DEM9SOL3 | HE501F09AP | DEMY9P | HE501N9KP3 | DEM9PF179A |
| HE501N15YS43 | DAM15SOL3 | HE501F15AP | DAMY15P | HE501N15KP3 | DAM15PF179A |
| HE501N25YS43 | DBM25SOL3 | HE501F25AP | DBMY25P | HE501N25KP3 | DBM25PF179A |
| HE501N37YS43 | DCM37SOL3 | HE501F37AP | DCMY37P | HE501N37KP3 | DCM37PF179A |
| HE501N50YS43 | DDM50SOL3 | HE501F50AP | DDMY50P | HE501N50KP3 | DDM50PF179A |
| HE501P09VS63E | DEM9S1A5N | | | | |
| HE501P15VS63E | DAM15SA15N | | | | |
| HE501P25VS63E | DBM25S1A5N | | | | |
| HE501P37VS63E | DCM37S1A5N | | | | |
| HE501P50VS63E | DDM50S1A5N | | | | |



Dimensions are shown in mm (inch)
Dimensions subject to change

## Coaxial 90° PCB (Sizes DE-DC)

Plug

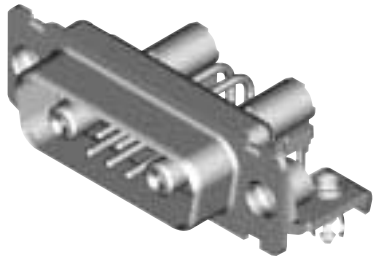

Reader's Resource

For contact cavity arrangements, see page 222.
For P.C. hole patterns, see pages 228-229.
For panel cutouts, see page 221.
For hardware views (Standard), see page 226.
For alternate bracket configuration (when connectors are supplied without boardlocks), see page 226.
For alternate 50 Ohm coaxial configuration, see page 225.

75 Ohm Part Numbers* with Bracket and Rivnut #4-40 UNC

| Shell Size | Layout | Part Number Without Screw Locks Without Boardlocks | Part Number Without Screw Locks With Boardlocks | Part Number With Screw Locks Without Boardlocks | Part Number With Screw Locks With Boardlocks |
|---|---|---|---|---|---|
| DE | 5W1 | DEMMP5C1PJ | DEMMC5C1PJ | DEMMD5C1PJ | DEMMG5C1PJ |
| DA | 7W2 | DAMMP7C2PJ | DAMMC7C2PJ | DAMMD7C2PJ | DAMMG7C2PJ |
| DA | 11W1 | DAMMP11C1PJ | DAMMC11C1PJ | DAMMD11C1PJ | DAMMG11C1PJ |
| DA | 3W3 | DAMMP3C3PJ | DAMMC3C3PJ | DAMMD3C3PJ | DAMMG3C3PJ |
| DA | 3WK3♣ | DAMMP3CK3PJTM | DAMMC3CK3PJTM | DAMMD3CK3PJTM | DAMMG3CK3PJTM |
| DB | 5W5 | DBMMP5C5PJ | DBMMC5C5PJ | DBMMD5C5PJ | DBMMG5C5PJ |
| DB | 9W4 | DBMMP9C4PJ | DBMMC9C4PJ | DBMMD9C4PJ | DBMMG9C4PJ |
| DB | 13W3 | DBMMP13C3PJ | DBMMC13C3PJ | DBMMD13C3PJ | DBMMG13C3PJ |
| DB | 17W2 | DBMMP17C2PJ | DBMMC17C2PJ | DBMMD17C2PJ | DBMMG17C2PJ |
| DB | 21W1 | DBMMP21C1PJ | DBMMC21C1PJ | DBMMD21C1PJ | DBMMG21C1PJ |
| DC | 8W8 | DCMMP8C8PJ | DCMMC8C8PJ | DCMMD8C8PJ | DCMMG8C8PJ |
| DC | 13W6 | DCMMP13C6PJ | DCMMC13C6PJ | DCMMD13C6PJ | DCMMG13C6PJ |
| DC | 17W5 | DCMMP17C5PJ | DCMMC17C5PJ | DCMMD17C5PJ | DCMMG17C5PJ |
| DC | 21WA4 | DCMMP21CA4PJ | DCMMC21CA4PJ | DCMMD21CA4PJ | DCMMG21CA4PJ |
| DC | 25W3 | DCMMP25C3PJ | DCMMC25C3PJ | DCMMD25C3PJ | DCMMG25C3PJ |
| DC | 27W2 | DCMMP27C2PJ | DCMMC27C2PJ | DCMMD27C2PJ | DCMMG27C2PJ |

Notes: *For 50 Ohm Coaxial substitute X for C. Example: DEMMP5X1PJ
For DD shell size, see page 148.
♣ Keyed

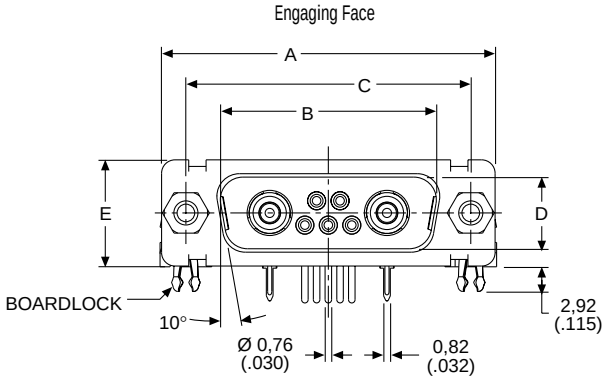


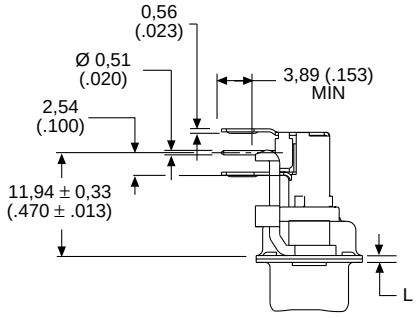


Screw lock, boardlock, and signal contacts removed for clarity

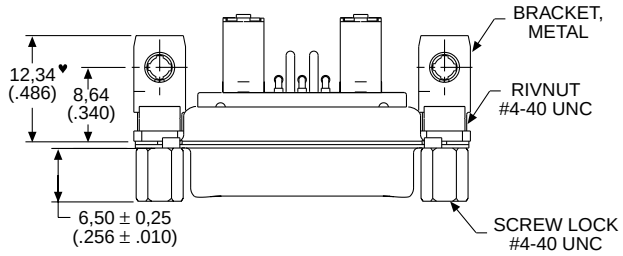


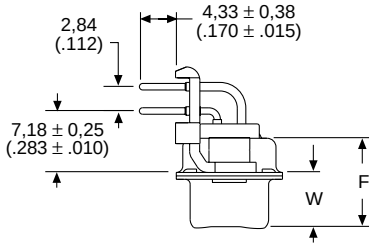


Screw lock, boardlock, and coaxial contact removed for clarity

Note: ♥ Dimension varies with alternate bracket configuration, see Reader's Resource page 226.

Dimensions

| Shell Size | A ±0,38 (.015) | B ±0,13 (.005) | C ±0,13 (.005) | D ±0,13 (.005) | E ±0,38 (.015) | F ±0,25 (.010) | W ±0,368 (.0145) | W ±0,41 (.016) | L ±0,25 (.010) |
|---|---|---|---|---|---|---|---|---|---|
| DE | 30,81 (1.213) | 16,92 (.666) | 24,99 (.984) | 8,36 (.329) | 12,55 (.494) | 10,72 (.422) | 6,693 (.2635) | — | 0,76 (.030) |
| DA | 39,14 (1.541) | 25,25 (.994) | 33,32 (1.312) | 8,36 (.329) | 12,55 (.494) | 10,72 (.422) | 6,693 (.2635) | — | 0,76 (.030) |
| DB | 53,04 (2.088) | 38,96 (1.534) | 47,04 (1.852) | 8,36 (.329) | 12,55 (.494) | 10,82 (.426) | — | 6,84 (.269) | 0,99 (.039) |
| DC | 69,32 (2.729) | 55,42 (2.182) | 63,50 (2.500) | 8,36 (.329) | 12,55 (.494) | 10,82 (.426) | — | 6,84 (.269) | 0,99 (.039) |



Dimensions are shown in mm (inch)
Dimensions subject to change

## Coaxial 90° PCB (Sizes DE-DC)

Receptacle

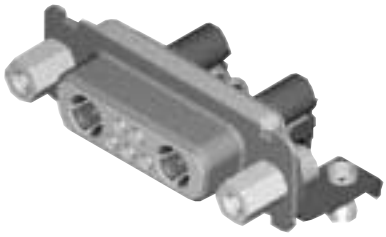

Reader's Resource

For contact cavity arrangements, see page 223.
For P.C. hole patterns, see pages 231-232.
For panel cutouts, see page 221.
For hardware views (Standard), see page 226.
For alternate bracket configuration (when connectors are supplied without boardlocks), see page 226.
For alternate 50 Ohm coaxial configuration, see page 225.

75 Ohm Part Numbers* with Bracket and Rivnut #4-40 UNC

| Shell Size | Layout | Part Number Without Screw Locks Without Boardlocks | Part Number Without Screw Locks With Boardlocks | Part Number With Screw Locks Without Boardlocks | Part Number With Screw Locks With Boardlocks |
|---|---|---|---|---|---|
| DE | 5W1 | DEMMP5C1SJ | DEMMC5C1SJ | DEMMD5C1SJ | DEMMG5C1SJ |
| DA | 7W2 | DAMMP7C2SJ | DAMMC7C2SJ | DAMMD7C2SJ | DAMMG7C2SJ |
| DA | 11W1 | DAMMP11C1SJ | DAMMC11C1SJ | DAMMD11C1SJ | DAMMG11C1SJ |
| DA | 3W3 | DAMMP3C3SJ | DAMMC3C3SJ | DAMMD3C3SJ | DAMMG3C3SJ |
| DA | 3WK3♣ | DAMMP3CK3SJTM | DAMMC3CK3SJTM | DAMMD3CK3SJTM | DAMMG3CK3SJTM |
| DB | 5W5 | DBMMP5C5SJ | DBMMC5C5SJ | DBMMD5C5SJ | DBMMG5C5SJ |
| DB | 9W4 | DBMMP9C4SJ | DBMMC9C4SJ | DBMMD9C4SJ | DBMMG9C4SJ |
| DB | 13W3 | DBMMP13C3SJ | DBMMC13C3SJ | DBMMD13C3SJ | DBMMG13C3SJ |
| DB | 17W2 | DBMMP17C2SJ | DBMMC17C2SJ | DBMMD17C2SJ | DBMMG17C2SJ |
| DB | 21W1 | DBMMP21C1SJ | DBMMC21C1SJ | DBMMD21C1SJ | DBMMG21C1SJ |
| DC | 8W8 | DCMMP8C8SJ | DCMMC8C8SJ | DCMMD8C8SJ | DCMMG8C8SJ |
| DC | 13W6 | DCMMP13C6SJ | DCMMC13C6SJ | DCMMD13C6SJ | DCMMG13C6SJ |
| DC | 17W5 | DCMMP17C5SJ | DCMMC17C5SJ | DCMMD17C5SJ | DCMMG17C5SJ |
| DC | 21WA4 | DCMMP21CA4SJ | DCMMC21CA4SJ | DCMMD21CA4SJ | DCMMG21CA4SJ |
| DC | 25W3 | DCMMP25C3SJ | DCMMC25C3SJ | DCMMD25C3SJ | DCMMG25C3SJ |
| DC | 27W2 | DCMMP27C2SJ | DCMMC27C2SJ | DCMMD27C2SJ | DCMMG27C2SJ |

Notes: *For 50 Ohm Coaxial substitute X for C. Example: DEMMP5X1SJ
For DD shell size, see page 149.
♣ Keyed

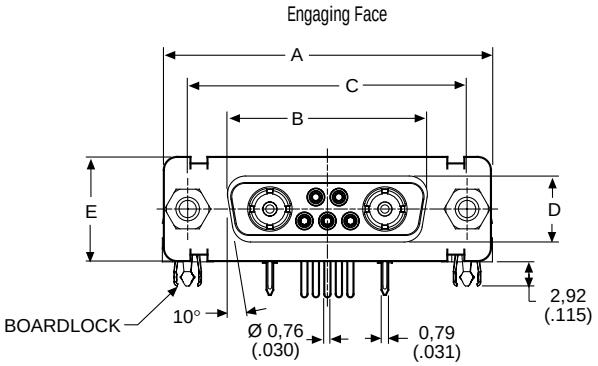


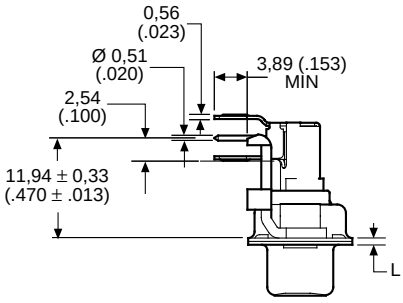


Screw lock, boardlock and signal contacts removed for clarity

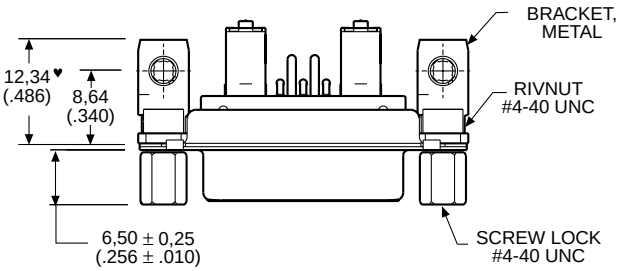


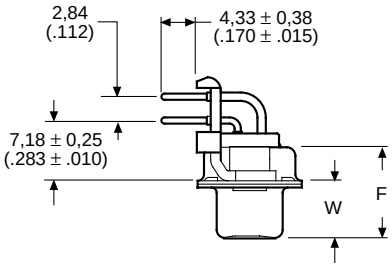


Screw lock, boardlock and coaxial contact removed for clarity

Note: ♥ Dimension varies with altenate bracket configuration, see Reader's Resource page 225.

Dimensions

| Shell Size | A ±0,38 (.015) | B ±0,13 (.005) | C ±0,13 (.005) | D ±0,13 (.005) | E ±0,38 (.015) | F ±0,25 (.010) | W ±0,38 (.015) | L ±0,25 (.010) |
|---|---|---|---|---|---|---|---|---|
| DE | 30,81 (1.213) | 16,33 (.643) | 24,99 (.984) | 7,90 (.311) | 12,55 (.494) | 10,90 (.429) | 6,94 (.273) | 0,76 (.030) |
| DA | 39,14 (1.541) | 24,66 (.971) | 33,32 (1.312) | 7,90 (.311) | 12,55 (.494) | 10,90 (.429) | 6,94 (.273) | 0,76 (.030) |
| DB | 53,04 (2.088) | 38,38 (1.511) | 47.04 (1.852) | 7,90 (.311) | 12,55 (.494) | 10,90 (.429) | 6,94 (.273) | 0,76 (.030) |
| DC | 69,32 (2.729) | 54,84 (2.159) | 63,50 (2.500) | 7,90 (.311) | 12,55 (.494) | 10,90 (.429) | 6,94 (.273) | 0,76 (.030) |

## Coaxial 90° PCB (Size DD)

Plug

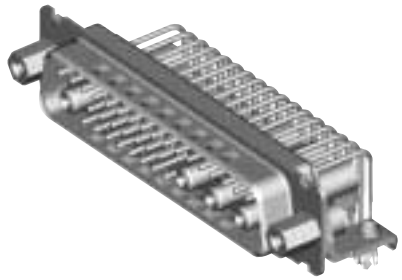

75 Ohm Part Numbers* with Metal Bracket and Rivnut #4-40 UNC

| Shell Size | Layout | Part Number Without Screw Locks Without Boardlocks | Part Number Without Screw Locks With Boardlocks | Part Number With Screw Locks Without Boardlocks | Part Number With Screw Locks With Boardlocks |
|---|---|---|---|---|---|
| DD | 24W7 | DDMMP24C7PJ | DDMMC24C7PJ | DDMMD24C7PJ | DDMMG24C7PJ |
| DD | 36W4 | DDMMP36C4PJ | DDMMC36C4PJ | DDMMD36C4PJ | DDMMG36C4PJ |
| DD | 43W2 | DDMMP43C2PJ | DDMMC43C2PJ | DDMMD43C2PJ | DDMMG43C2PJ |
| DD | 47W1 | DDMMP47C1PJ | DDMMC47C1PJ | DDMMD47C1PJ | DDMMG47C1PJ |

Note: *For 50 Ohm Coaxial substitute X for C. Example: DDMMP24X7PJ

Reader's Resource

For contact cavity arrangements, see page 222.
For P.C. hole patterns, see page 230.
For panel cutouts, see page 221.
For hardware views (Standard), see page 226.
For alternate bracket configuration (when connectors are supplied without boardlocks), see page 226.
For alternate 50 Ohm coaxial configuration, see page 225.

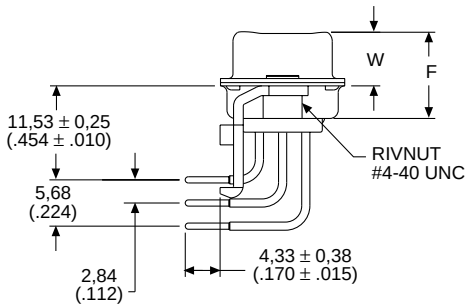


Screw lock, boardlock, and coaxial contact removed for clarity

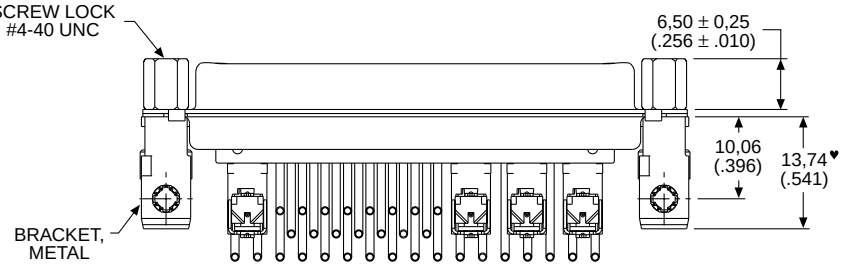


Engaging Face

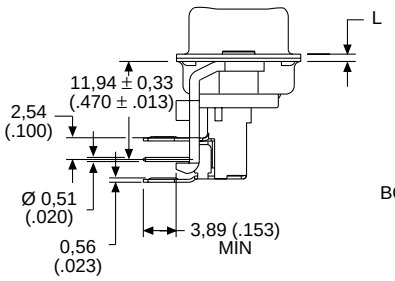


Screw lock, boardlock, and signal contacts removed for clarity

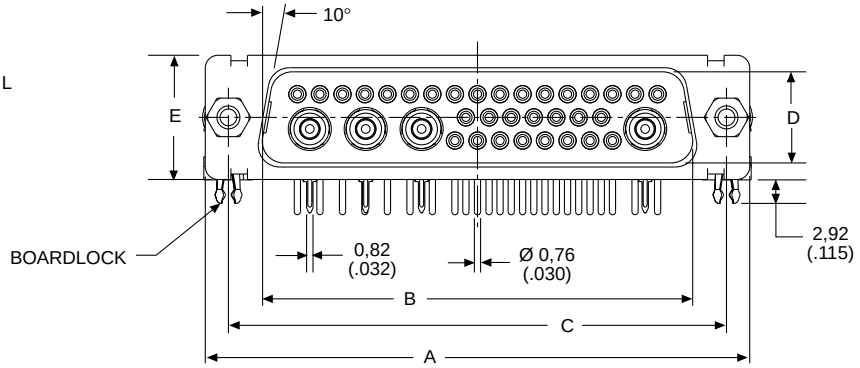


Note: ♥ Dimension varies with alternate bracket configuration, see Reader's Resource page 226.

Dimensions

| Shell Size | A ±0,38 (.015) | B ±0,13 (.005) | C ±0,13 (.005) | D ±0,13 (.005) | E ±0,38 (.015) | F ±0,25 (.010) | W ±0,41 (.016) | L ±0,25 (.010) |
|---|---|---|---|---|---|---|---|---|
| DD | 66,93 (2.635) | 52,81 (2.079) | 61,11 (2.406) | 11,07 (.436) | 15,37 (.605) | 10,82 (.426) | 6,84 (.269) | 0,99 (.039) |



Dimensions are shown in mm (inch)
Dimensions subject to change

## Coaxial 90° PCB (Size DD)

Receptacle

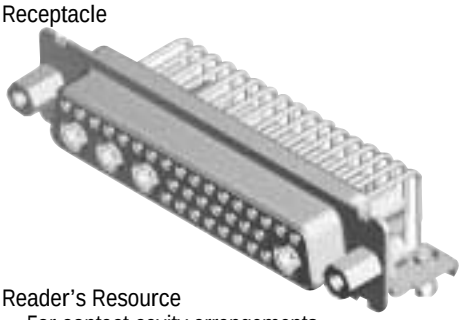

Reader's Resource

For contact cavity arrangements, see page 223.
For P.C. hole patterns, see page 233.
For panel cutouts, see page 221.
For hardware views (Standard), see page 226.
For alternate bracket configuration (when connectors are supplied without boardlocks), see page 226.
For alternate 50 Ohm coaxial configuration, see page 225.

75 Ohm Part Numbers* with Metal Bracket and Rivnut #4-40 UNC

| Shell Size | Layout | Part Number Without Screw Locks Without Boardlocks | Part Number Without Screw Locks With Boardlocks | Part Number With Screw Locks Without Boardlocks | Part Number With Screw Locks With Boardlocks |
|---|---|---|---|---|---|
| DD | 24W7 | DDMMP24C7SJ | DDMMC24C7SJ | DDMMD24C7SJ | DDMMG24C7SJ |
| DD | 36W4 | DDMMP36C4SJ | DDMMC36C4SJ | DDMMD36C4SJ | DDMMG36C4SJ |
| DD | 43W2 | DDMMP43C2SJ | DDMMC43C2SJ | DDMMD43C2SJ | DDMMG43C2SJ |
| DD | 47W1 | DDMMP47C1SJ | DDMMC47C1SJ | DDMMD47C1SJ | DDMMG47C1SJ |

Note: *For 50 Ohm Coaxial substitute X for C. Example: DDMMG36X4SJ

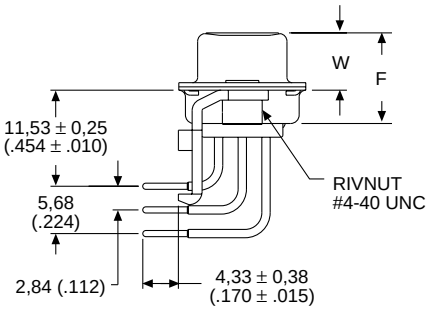


Screw lock, boardlock, and coaxial contacts removed for clarity

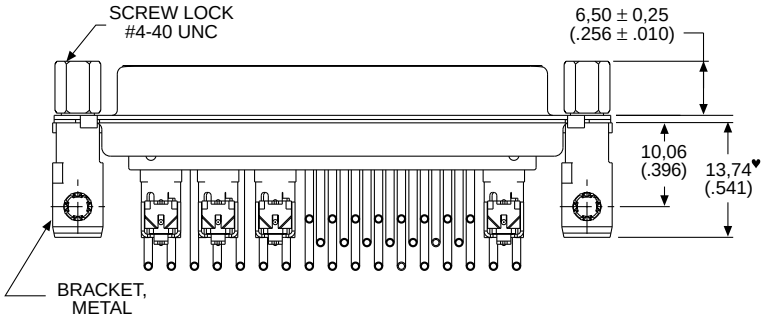


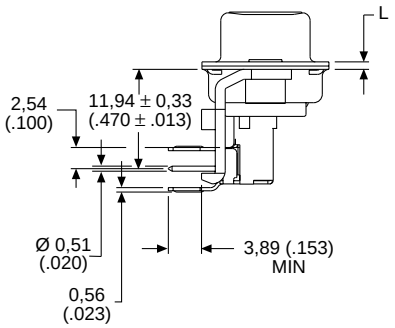


Screw lock, boardlock, and signal contacts removed for clarity

Engaging Face

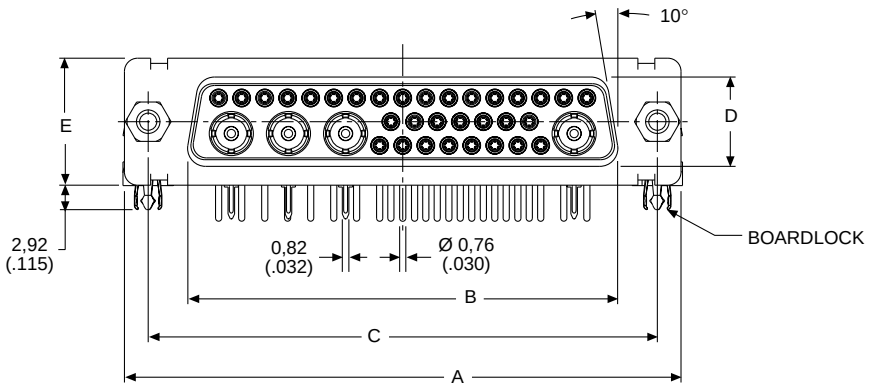


Note: ♥ Dimension varies with alternate bracket configuration, see Reader's Resource page 226.

### Dimensions

| Shell Size | A ±0,38 (.015) | B ±0,13 (.005) | C ±0,13 (.005) | D ±0,13 (.005) | E ±0,38 (.015) | F ±0,25 (.010) | W ±0,38 (.015) | L ±0,25 (.010) |
|---|---|---|---|---|---|---|---|---|
| DD | 66,93 (2.635) | 52,42 (2.064) | 61,11 (2.406) | 10,74 (.423) | 15,37 (.605) | 10,90 (.429) | 6,94 (.273) | 0,76 (.030) |

## Coaxial Straight PCB (Sizes DE-DC)

Plug

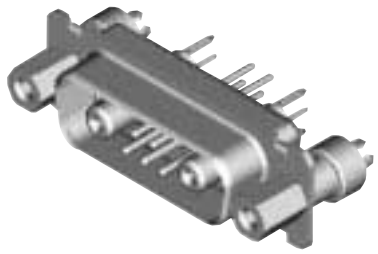

Reader's Resource
For contact cavity arrangements, see page 222.
For P.C. hole patterns, see pages 238-239.
For panel cutouts, see page 221.
For hardware views (Standard), see page 226.
For alternate 50 Ohm coaxial configuration, see page 225.

75 Ohm Part Numbers* with Standoff #4-40 UNC

| Shell Size | Layout | Part Number Without Screw Locks Without Boardlocks | Part Number Without Screw Locks With Boardlocks | Part Number With Screw Locks With Boardlocks |
|---|---|---|---|---|
| DE | 5W1 | DEMMV5C1PN | DEMMZ5C1PN | DEMMN5C1PN |
| DA | 7W2 | DAMMV7C2PN | DAMMZ7C2PN | DAMMN7C2PN |
| DA | 11W1 | DAMMV11C1PN | DAMMZ11C1PN | DAMMN11C1PN |
| DA | 3W3 | DAMMV3C3PN | DAMMZ3C3PN | DAMMN3C3PN |
| DA | 3WK3♣ | DAMMV3CK3PNTM | DAMMZ3CK3PNTM | DAMMN3CK3PNTM |
| DB | 5W5 | DBMMV5C5PN | DBMMZ5C5PN | DBMMN5C5PN |
| DB | 9W4 | DBMMV9C4PN | DBMMZ9C4PN | DBMMN9C4PN |
| DB | 13W3 | DBMMV13C3PN | DBMMZ13C3PN | DBMMN13C3PN |
| DB | 17W2 | DBMMV17C2PN | DBMMZ17C2PN | DBMMN17C2PN |
| DB | 21W1 | DBMMV21C1PN | DBMMZ21C1PN | DBMMN21C1PN |
| DC | 8W8 | DCMMV8C8PN | DCMMZ8C8PN | DCMMN8C8PN |
| DC | 13W6 | DCMMV13C6PN | DCMMZ13C6PN | DCMMN13C6PN |
| DC | 17W5 | DCMMV17C5PN | DCMMZ17C5PN | DCMMN17C5PN |
| DC | 21WA4 | DCMMV21CA4PN | DCMMZ21CA4PN | DCMMN21CA4PN |
| DC | 25W3 | DCMMV25C3PN | DCMMZ25C3PN | DCMMN25C3PN |
| DC | 27W2 | DCMMV27C2PN | DCMMZ27C2PN | DCMMN27C2PN |

Notes: *For 50 Ohm Coaxial substitute X for C. Example: DEMMV5X1PN
For DD shell size, see page 152.
♣ Keyed

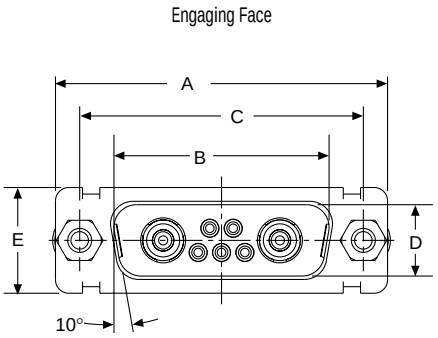


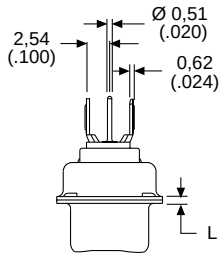


Screw lock, boardlock, and signal contacts removed for clarity

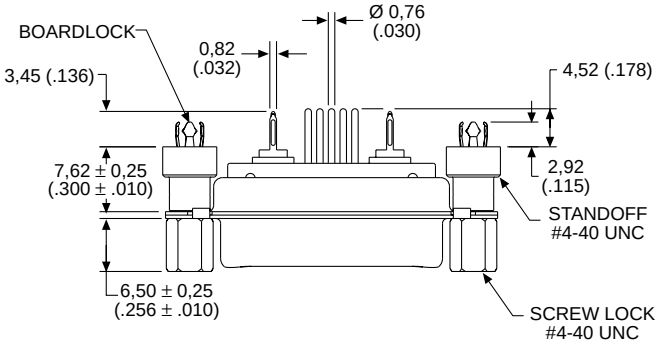


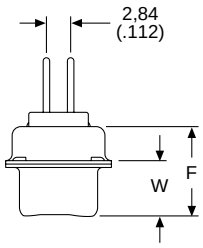


Screw lock, boardlock, and coaxial contact removed for clarity

Dimensions

| Shell Size | A ±0,38 (.015) | B ±0,13 (.005) | C ±0,13 (.005) | D ±0,13 (.005) | E ±0,38 (.015) | F ±0,25 (.010) | W ±0,368 (.0145) | W ±0,41 (.016) | L ±0,25 (.010) |
|---|---|---|---|---|---|---|---|---|---|
| DE | 30,81 (1.213) | 16,92 (.666) | 24,99 (.984) | 8,36 (.329) | 12,55 (.494) | 10,72 (.422) | 6,693 (.2635) | — | 0,76 (.030) |
| DA | 39,14 (1.541) | 25,25 (.994) | 33,32 (1.312) | 8,36 (.329) | 12,55 (.494) | 10,72 (.422) | 6,693 (.2635) | — | 0,76 (.030) |
| DB | 53,04 (2.088) | 38,96 (1.534) | 47,04 (1.852) | 8,36 (.329) | 12,55 (.494) | 10,82 (.426) | — | 6,84 (.269) | 0,99 (.039) |
| DC | 69,32 (2.729) | 55,42 (2.182) | 63,50 (2.500) | 8,36 (.329) | 12,55 (.494) | 10,82 (.426) | — | 6,84 (.269) | 0,99 (.039) |



Dimensions are shown in mm (inch)
Dimensions subject to change

## Coaxial Straight PCB (Sizes DE-DC)

Receptacle

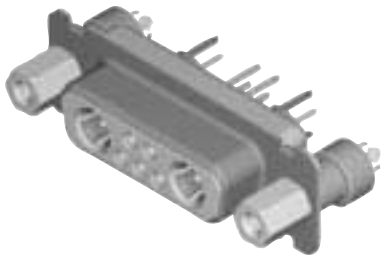

Reader's Resource

For contact cavity arrangements, see page 223.
For P.C. hole patterns, see pages 241-242.
For panel cutouts, see page 221.
For hardware views (Standard), see page 226.
For alternate 50 Ohm coaxial configuration, see page 225.

75 Ohm Part Numbers* with Standoff #4-40 UNC

| Shell Size | Layout | Part Number Without Screw Locks Without Boardlocks | Part Number Without Screw Locks With Boardlocks | Part Number With Screw Locks With Boardlocks |
|---|---|---|---|---|
| DE | 5W1 | DEMMV5C1SN | DEMMZ5C1SN | DEMMN5C1SN |
| DA | 7W2 | DAMMV7C2SN | DAMMZ7C2SN | DAMMN7C2SN |
| DA | 11W1 | DAMMV11C1SN | DAMMZ11C1SN | DAMMN11C1SN |
| DA | 3W3 | DAMMV3C3SN | DAMMZ3C3SN | DAMMN3C3SN |
| DA | 3WK3♣ | DAMMV3CK3SNTM | DAMMZ3CK3SNTM | DAMMN3CK3SNTM |
| DB | 5W5 | DBMMV5C5SN | DBMMZ5C5SN | DBMMN5C5SN |
| DB | 9W4 | DBMMV9C4SN | DBMMZ9C4SN | DBMMN9C4SN |
| DB | 13W3 | DBMMV13C3SN | DBMMZ13C3SN | DBMMN13C3SN |
| DB | 17W2 | DBMMV17C2SN | DBMMZ17C2SN | DBMMN17C2SN |
| DB | 21W1 | DBMMV21C1SN | DBMMZ21C1SN | DBMMN21C1SN |
| DC | 8W8 | DCMMV8C8SN | DCMMZ8C8SN | DCMMN8C8SN |
| DC | 13W6 | DCMMV13C6SN | DCMMZ13C6SN | DCMMN13C6SN |
| DC | 17W5 | DCMMV17C5SN | DCMMZ17C5SN | DCMMN17C5SN |
| DC | 21WA4 | DCMMV21CA4SN | DCMMZ21CA4SN | DCMMN21CA4SN |
| DC | 25W3 | DCMMV25C3SN | DCMMZ25C3SN | DCMMN25C3SN |
| DC | 27W2 | DCMMV27C2SN | DCMMZ27C2SN | DCMMN27C2SN |

Notes: *For 50 Ohm Coaxial substitute X for C. Example: DEMMV5X1SN
For DD shell size, see page 153.
♣ Keyed

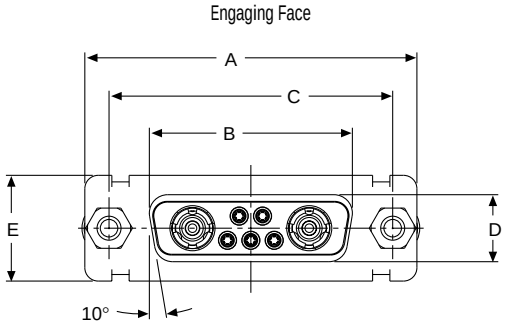


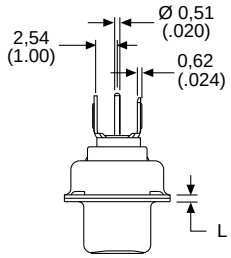


Screw lock, boardlock, and signal contacts removed for clarity

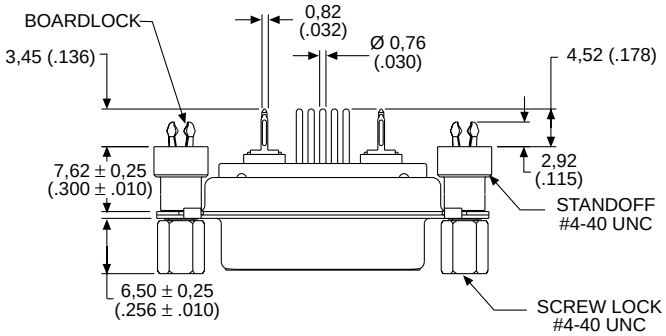


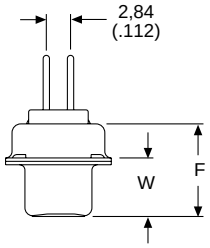


Hardware and coaxial contact removed for clarity

Dimensions

| Shell Size | A ±0,38 (.015) | B ±0,13 (.005) | C ±0,13 (.005) | D ±0,13 (.005) | E ±0,38 (.015) | F 0,25 (.010) | W ±0,38 (.015) | L ±0,25 (.010) |
|---|---|---|---|---|---|---|---|---|
| DE | 30,81 (1.213) | 16,33 (.643) | 24,99 (.984) | 7,90 (.311) | 12,55 (.494) | 10,90 (.429) | 6,94 (.273) | 0,76 (.030) |
| DA | 39,14 (1.541) | 24,66 (.971) | 33,32 (1.312) | 7,90 (.311) | 12,55 (.494) | 10,90 (.429) | 6,94 (.273) | 0,76 (.030) |
| DB | 53,04 (2.088) | 38,38 (1.511) | 47,04 (1.852) | 7,90 (.311) | 12,55 (.494) | 10,90 (.429) | 6,94 (.273) | 0,76 (.030) |
| DC | 69,32 (2.729) | 54,84 (2.159) | 63,50 (2.500) | 7,90 (.311) | 12,55 (.494) | 10,90 (.429) | 6,94 (.273) | 0,76 (.030) |

## Coaxial Straight PCB (Size DD)

Plug

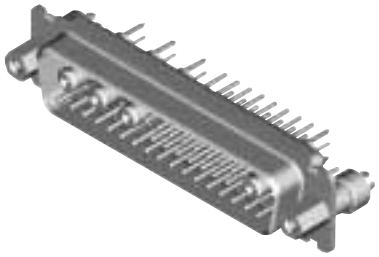

75 Ohm Part Numbers* with Standoff #4-40 UNC

| Shell Size | Layout | Part Number Without Screw Locks Without Boardlocks | Part Number Without Screw Locks With Boardlocks | Part Number With Screw Locks With Boardlocks |
|---|---|---|---|---|
| DD | 24W7 | DDMMV24C7PN | DDMMZ24C7PN | DDMMN24C7PN |
| DD | 36W4 | DDMMV36C4PN | DDMMZ36C4PN | DDMMN36C4PN |
| DD | 43W2 | DDMMV43C2PN | DDMMZ43C2PN | DDMMN43C2PN |
| DD | 47W1 | DDMMV47C1PN | DDMMZ47C1PN | DDMMN47C1PN |

Note: *For 50 Ohm Coaxial substitute X for C. Example: DDMMV24XPN

Reader's Resource

For contact cavity arrangements, see page 222.
For P.C. hole patterns, see page 256.
For panel cutouts, see page 221.
For hardware views (Standard), see page 226.
For alternate 50 Ohm coaxial configuration, see page 225.

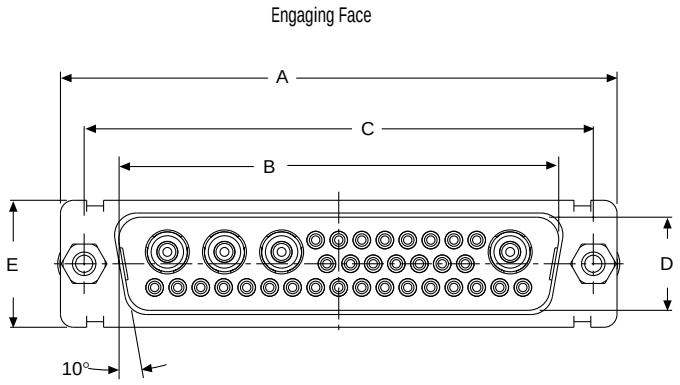


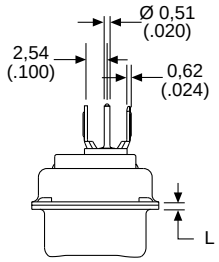


Screw lock, boardlock, and signal contacts removed for clarity

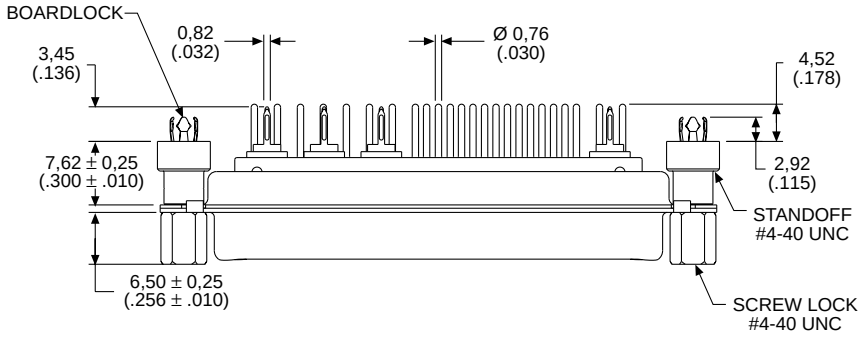


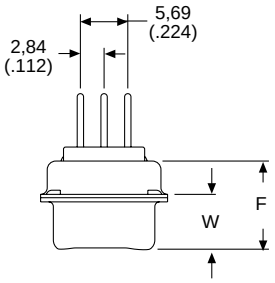


Screw lock, boardlock, and coaxial contact removed for clarity

Dimensions

| Shell Size | A ±0,38 (.015) | B ±0,13 (.005) | C ±0,13 (.005) | D ±0,13 (.005) | E ±0,38 (.015) | F ±0,25 (.010) | W ±0,41 (.016) | L ±0,25 (.010) |
|---|---|---|---|---|---|---|---|---|
| DD | 66,93 (2.635) | 52,81 (2.079) | 61,11 (2.406) | 11,07 (.436) | 15,37 (.605) | 10,82 (.426) | 6,84 (.269) | 0,99 (.039) |



Dimensions are shown in mm (inch)
Dimensions subject to change

## Coaxial Straight PCB (Size DD)

Receptacle

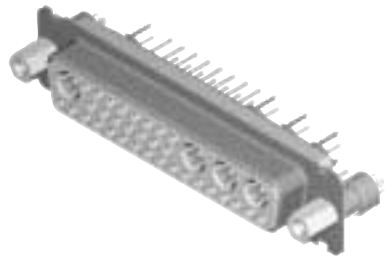

75 Ohm Part Numbers* with Standoff #4-40 UNC

| Shell Size | Layout | Part Number Without Screw Locks Without Boardlocks | Part Number Without Screw Locks With Boardlocks | Part Number With Screw Locks With Boardlocks |
|---|---|---|---|---|
| DD | 24W7 | DDMMV24C7SN | DDMMZ24C7SN | DDMMN24C7SN |
| DD | 36W4 | DDMMV36C4SN | DDMMZ36C4SN | DDMMN36C4SN |
| DD | 43W2 | DDMMV43C2SN | DDMMZ43C2SN | DDMMN43C2SN |
| DD | 47W1 | DDMMV47C1SN | DDMMZ47C1SN | DDMMN47C1SN |

Note: *For 50 Ohm Coaxial substitute X for C. Example: DDMMV24X7SN

Reader's Resource

For contact cavity arrangements, see page 223.
For P.C. hole patterns, see page 259.
For panel cutouts, see page 221.
For hardware views (Standard), see page 226.
For alternate 50 Ohm coaxial configuration, see page 225.

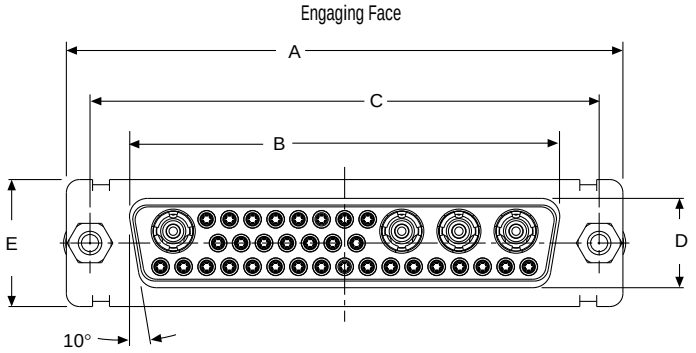


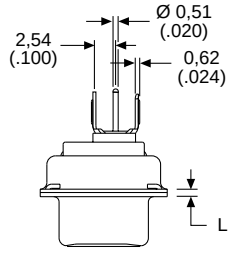


Screw lock, boardlock, and signal contacts removed for clarity

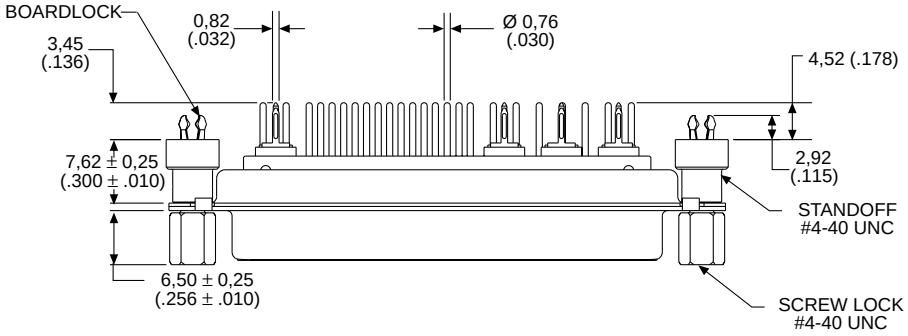


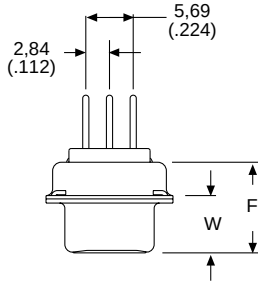


Screw lock, boardlock, and coaxial contact removed for clarity

Dimensions

| Shell Size | A ±0,38 (.015) | B ±0,13 (.005) | C ±0,13 (.005) | D ±0,13 (.005) | E ±0,38 (.015) | F ±0,25 (.010) | W ±0,38 (.015) | L ±0,25 (.010) |
|---|---|---|---|---|---|---|---|---|
| DD | 66,93 (2.635) | 52,42 (2.064) | 61,11 (2.406) | 10,74 (.423) | 15,37 (.605) | 10,90 (.429) | 6,94 (.273) | 0,76 (.030) |

## 40 A High Power 90° PCB (Sizes DE-DC)

Plug

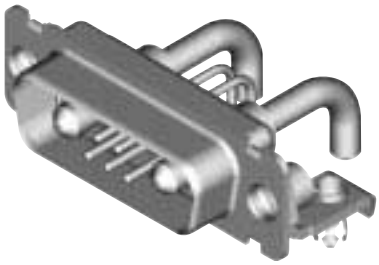

Reader's Resource

For contact cavity arrangements, see page 222.
For P.C. hole patterns, see pages 244-245.
For panel cutouts, see page 221.
For hardware views (Standard), see page 226.
For alternate bracket configuration (when connectors are supplied without boardlocks), see page 226.

Part Numbers with Metal Bracket and Rivnut #4-40 UNC

| Shell Size | Layout | Part Number Without Screw Locks Without Boardlocks | Part Number Without Screw Locks With Boardlocks | Part Number With Screw Locks Without Boardlocks | Part Number With Screw Locks With Boardlocks |
|---|---|---|---|---|---|
| DE | 5W1 | DEMMP5H1PJ | DEMMC5H1PJ | DEMMD5H1PJ | DEMMG5H1PJ |
| DA | 7W2 | DAMMP7H2PJ | DAMMC7H2PJ | DAMMD7H2PJ | DAMMG7H2PJ |
| DA | 11W1 | DAMMP11H1PJ | DAMMC11H1PJ | DAMMD11H1PJ | DAMMG11H1PJ |
| DA | 3W3 | DAMMP3H3PJ | DAMMC3H3PJ | DAMMD3H3PJ | DAMMG3H3PJ |
| DA | 3WK3♣ | DAMMP3HK3PJTM | DAMMC3HK3PJTM | DAMMD3HK3PJTM | DAMMG3HK3PJTM |
| DB | 5W5 | DBMMP5H5PJ | DBMMC5H5PJ | DBMMD5H5PJ | DBMMG5H5PJ |
| DB | 9W4 | DBMMP9H4PJ | DBMMC9H4PJ | DBMMD9H4PJ | DBMMG9H4PJ |
| DB | 13W3 | DBMMP13H3PJ | DBMMC13H3PJ | DBMMD13H3PJ | DBMMG13H3PJ |
| DB | 17W2 | DBMMP17H2PJ | DBMMC17H2PJ | DBMMD17H2PJ | DBMMG17H2PJ |
| DB | 21W1 | DBMMP21H1PJ | DBMMC21H1PJ | DBMMD21H1PJ | DBMMG21H1PJ |
| DC | 8W8 | DCMMP8H8PJ | DCMMC8H8PJ | DCMMD8H8PJ | DCMMG8H8PJ |
| DC | 13W6 | DCMMP13H6PJ | DCMMC13H6PJ | DCMMD13H6PJ | DCMMG13H6PJ |
| DC | 17W5 | DCMMP17H5PJ | DCMMC17H5PJ | DCMMD17H5PJ | DCMMG17H5PJ |
| DC | 21WA4 | DCMMP21HA4PJ | DCMMC21HA4PJ | DCMMD21HA4PJ | DCMMG21HA4PJ |
| DC | 25W3 | DCMMP25H3PJ | DCMMC25H3PJ | DCMMD25H3PJ | DCMMG25H3PJ |
| DC | 27W2 | DCMMP27H2PJ | DCMMC27H2PJ | DCMMD27H2PJ | DCMMG27H2PJ |

Notes: For DD shell size, see page 156.
♣ Keyed

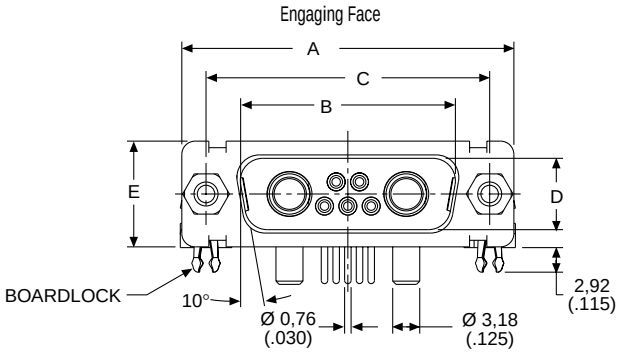


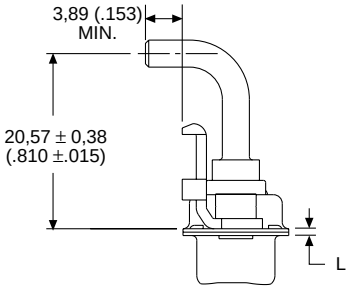


Screw lock, boardlock, and signal contacts removed for clarity

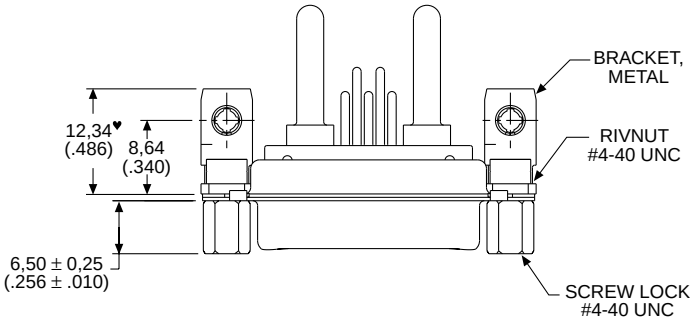


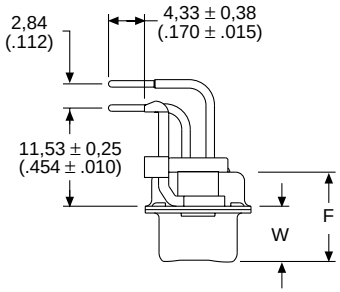


Screw lock, boardlock, and high power contact removed for clarity

Note: ♥ Dimension varies with alternate bracket configuration, see Reader's Resource page 226.

Dimensions

| Shell Size | A ±0,38 (.015) | B ±0,13 (.005) | C ±0,13 (.005) | D ±0,13 (.005) | E ±0,38 (.015) | F ±0,25 (.010) | W ±0,368 (.0145) | W ±0,41 (.016) | L ±0,25 (.010) |
|---|---|---|---|---|---|---|---|---|---|
| DE | 30,81 (1.213) | 16,92 (.666) | 24,99 (.984) | 8,36 (.329) | 12,55 (.494) | 10,72 (.422) | 6,693 (.2635) | — | 0,76 (.030) |
| DA | 39,14 (1.541) | 25,25 (.994) | 33,32 (1.312) | 8,36 (.329) | 12,55 (.494) | 10,72 (.422) | 6,693 (.2635) | — | 0,76 (.030) |
| DB | 53,04 (2.088) | 38,96 (1.534) | 47,04 (1.852) | 8,36 (.329) | 12,55 (.494) | 10,82 (.426) | — | 6,84 (.269) | 0,99 (.039) |
| DC | 69,32 (2.729) | 55,42 (2.182) | 63,50 (2.500) | 8,36 (.329) | 12,55 (.494) | 10,82 (.426) | — | 6,84 (.269) | 0,99 (.039) |



Dimensions are shown in mm (inch)
Dimensions subject to change

## 40 A High Power 90° PCB (Sizes DE-DC)

Receptacle

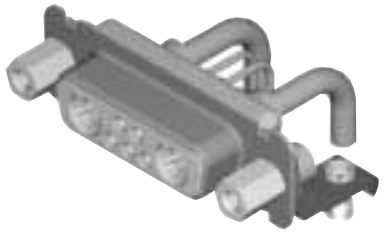

Reader's Resource

For contact cavity arrangements, see page 223.
For P.C. hole patterns, see pages 247-248.
For panel cutouts, see page 221.
For hardware views (Standard), see page 226.
For alternate bracket configuration (when connectors are supplied without boardlocks), see page 226.

Part Numbers with Metal Bracket and Rivnut #4-40 UNC

| Shell Size | Layout | Part Number Without Screw Locks Without Boardlocks | Part Number Without Screw Locks With Boardlocks | Part Number With Screw Locks Without Boardlocks | Part Number With Screw Locks With Boardlocks |
|---|---|---|---|---|---|
| DE | 5W1 | DEMMP5H1SJ | DEMMC5H1SJ | DEMMD5H1SJ | DEMMG5H1SJ |
| DA | 7W2 | DAMMP7H2SJ | DAMMC7H2SJ | DAMMD7H2SJ | DAMMG7H2SJ |
| DA | 11W1 | DAMMP11H1SJ | DAMMC11H1SJ | DAMMD11H1SJ | DAMMG11H1SJ |
| DA | 3W3 | DAMMP3H3SJ | DAMMC3H3SJ | DAMMD3H3SJ | DAMMG3H3SJ |
| DA | 3WK3♣ | DAMMP3HK3SJTM | DAMMC3HK3SJTM | DAMMD3HK3SJTM | DAMMG3HK3SJTM |
| DB | 5W5 | DBMMP5H5SJ | DBMMC5H5SJ | DBMMD5H5SJ | DBMMG5H5SJ |
| DB | 9W4 | DBMMP9H4SJ | DBMMC9H4SJ | DBMMD9H4SJ | DBMMG9H4SJ |
| DB | 13W3 | DBMMP13H3SJ | DBMMC13H3SJ | DBMMD13H3SJ | DBMMG13H3SJ |
| DB | 17W2 | DBMMP17H2SJ | DBMMC17H2SJ | DBMMD17H2SJ | DBMMG17H2SJ |
| DB | 21W1 | DBMMP21H1SJ | DBMMC21H1SJ | DBMMD21H1SJ | DBMMG21H1SJ |
| DC | 8W8 | DCMMP8H8SJ | DCMMC8H8SJ | DCMMD8H8SJ | DCMMG8H8SJ |
| DC | 13W6 | DCMMP13H6SJ | DCMMC13H6SJ | DCMMD13H6SJ | DCMMG13H6SJ |
| DC | 17W5 | DCMMP17H5SJ | DCMMC17H5SJ | DCMMD17H5SJ | DCMMG17H5SJ |
| DC | 21WA4 | DCMMP21HA4SJ | DCMMC21HA4SJ | DCMMD21HA4SJ | DCMMG21HA4SJ |
| DC | 25W3 | DCMMP25H3SJ | DCMMC25H3SJ | DCMMD25H3SJ | DCMMG25H3SJ |
| DC | 27W2 | DCMMP27H2SJ | DCMMC27H2SJ | DCMMD27H2SJ | DCMMG27H2SJ |

Notes: For DD shell size, see page 157.
♣ Keyed.

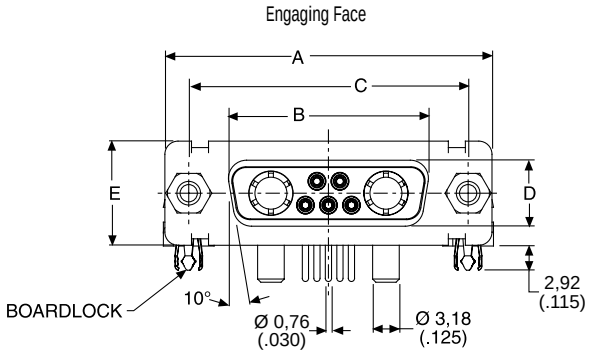


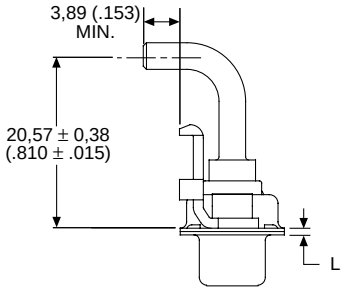


Screw lock, boardlock, and signal contacts removed for clarity

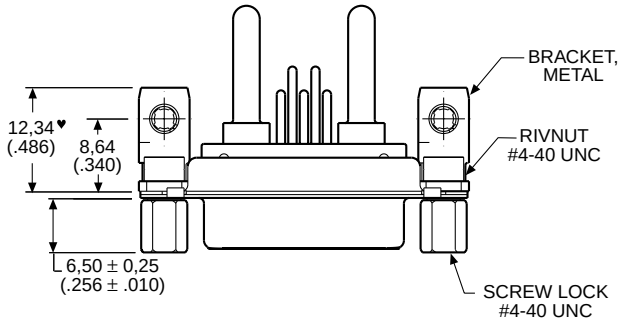


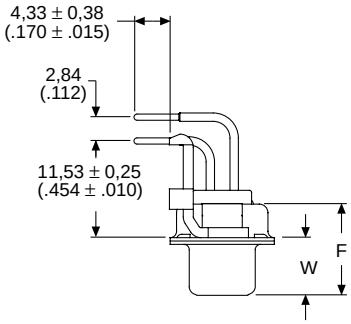


Screw lock, boardlock, and high power contact removed for clarity

Note: ♥ Dimension varies with alternate bracket configuration, see Reader's Resource page 226.

Dimensions

| Shell Size | A ±0,38 (.015) | B ±0,13 (.005) | C ±0,13 (.005) | D ±0,13 (.005) | E ±0,38 (.015) | F ±0,25 (.010) | W ±0,38 (.015) | L ±0,25 (.010) |
|---|---|---|---|---|---|---|---|---|
| DE | 30,81 (1.213) | 16,33 (.643) | 24,99 (.984) | 7,90 (.311) | 12,55 (.494) | 10,90 (.429) | 6,94 (.273) | 0,76 (.030) |
| DA | 39,14 (1.541) | 24,66 (.971) | 33,32 (1.312) | 7,90 (.311) | 12,55 (.494) | 10,90 (.429) | 6,94 (.273) | 0,76 (.030) |
| DB | 53,04 (2.088) | 38,38 (1.511) | 47,04 (1.852) | 7,90 (.311) | 12,55 (.494) | 10,90 (.429) | 6,94 (.273) | 0,76 (.030) |
| DC | 69,32 (2.729) | 54,84 (2.159) | 63,50 (2.500) | 7,90 (.311) | 12,55 (.494) | 10,90 (.429) | 6,94 (.273) | 0,76 (.030) |

## 40 A High Power 90° PCB (Size DD)

Plug

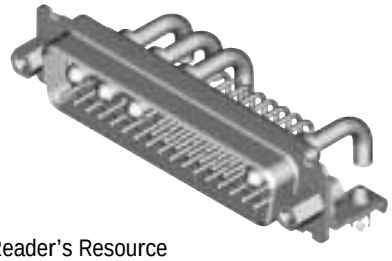

Reader's Resource
For contact cavity arrangements, see page 222.
For P.C. hole patterns, see page 246.
For panel cutouts, see page 221.
For hardware views (Standard), see page 226.
For alternate bracket configuration (when connectors are supplied without boardlocks), see page 226.

Part Numbers with Metal Bracket and Rivnut #4-40 UNC

| Shell Size | Layout | Part Number Without Screw Locks Without Boardlocks | Part Number Without Screw Locks With Boardlocks | Part Number With Screw Locks Without Boardlocks | Part Number With Screw Locks With Boardlocks |
|---|---|---|---|---|---|
| DD | 24W7 | DDMMP24H7PJ | DDMMC24H7PJ | DDMMD24H7PJ | DDMMG24H7PJ |
| DD | 36W4 | DDMMP36H4PJ | DDMMC36H4PJ | DDMMD36H4PJ | DDMMG36H4PJ |
| DD | 43W2 | DDMMP43H2PJ | DDMMC43H2PJ | DDMMD43H2PJ | DDMMG43H2PJ |
| DD | 47W1 | DDMMP47H1PJ | DDMMC47H1PJ | DDMMD47H1PJ | DDMMG47H1PJ |

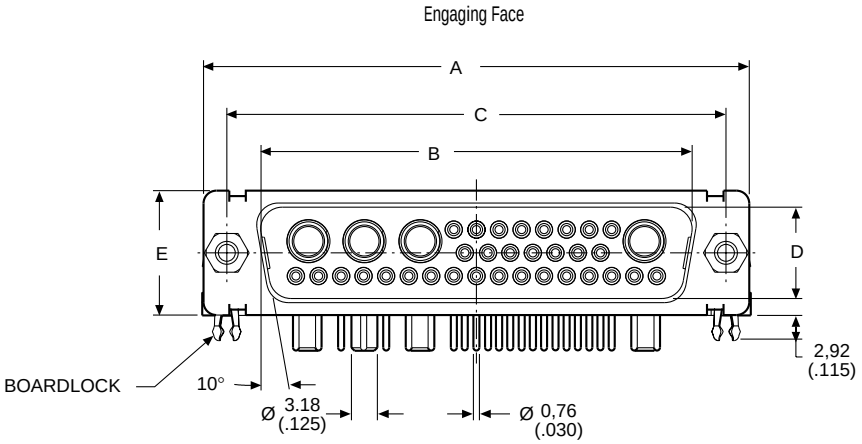


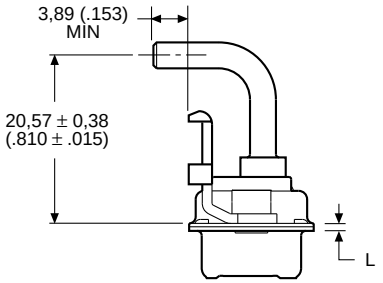


Screw lock, boardlock, and signal contacts removed for clarity

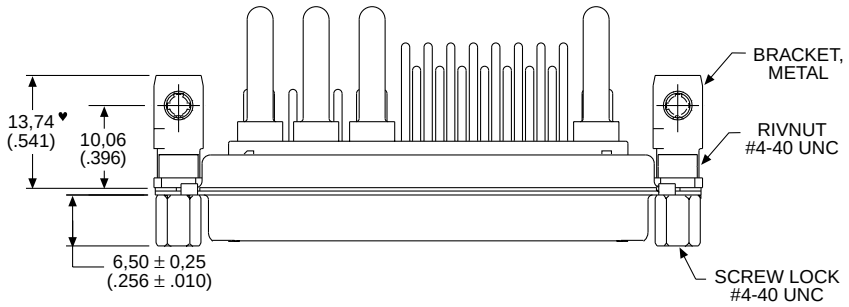


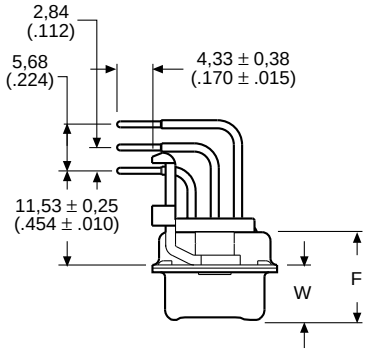


Screw lock, boardlock, and high power contact removed for clarity

Note: ♥ Dimension varies with alternate bracket configuration, see Reader's Resource page 226.

Dimensions

| Shell Size | A ±0,38 (.015) | B ±0,13 (.005) | C ±0,13 (.005) | D ±0,13 (.005) | E ±0,38 (.015) | F ±0,25 (.010) | W ±0,41 (.016) | L ±0,25 (.010) |
|---|---|---|---|---|---|---|---|---|
| DD | 66,93 (2.635) | 52,81 (2.079) | 61,11 (2.406) | 11,07 (.436) | 15,37 (.605) | 10,82 (.426) | 6,84 (.269) | 0,99 (.039) |



Dimensions are shown in mm (inch)
Dimensions subject to change

## 40 A High Power 90° PCB (Size DD)

Receptacle

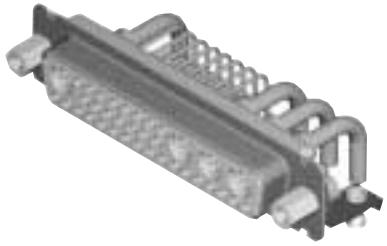

Reader's Resource

For contact cavity arrangements, see page 223.
For P.C. hole patterns, see page 249.
For panel cutouts, see page 221.
For hardware views (Standard), see page 226.
For alternate bracket configuration (when connectors are supplied without boardlocks), see page 226.

Part Numbers with Metal Bracket and Rivnut #4-40 UNC

| Shell Size | Layout | Part Number Without Screw Locks Without Boardlocks | Part Number Without Screw Locks With Boardlocks | Part Number With Screw Locks Without Boardlocks | Part Number With Screw Locks With Boardlocks |
|---|---|---|---|---|---|
| DD | 24W7 | DDMMP24H7SJ | DDMMC24H7SJ | DDMMD24H7SJ | DDMMG24H7SJ |
| DD | 36W4 | DDMMP36H4SJ | DDMMC36H4SJ | DDMMD36H4SJ | DDMMG36H4SJ |
| DD | 43W2 | DDMMP43H2SJ | DDMMC43H2SJ | DDMMD43H2SJ | DDMMG43H2SJ |
| DD | 47W1 | DDMMP47H1SJ | DDMMC47H1SJ | DDMMD47H1SJ | DDMMG47H1SJ |

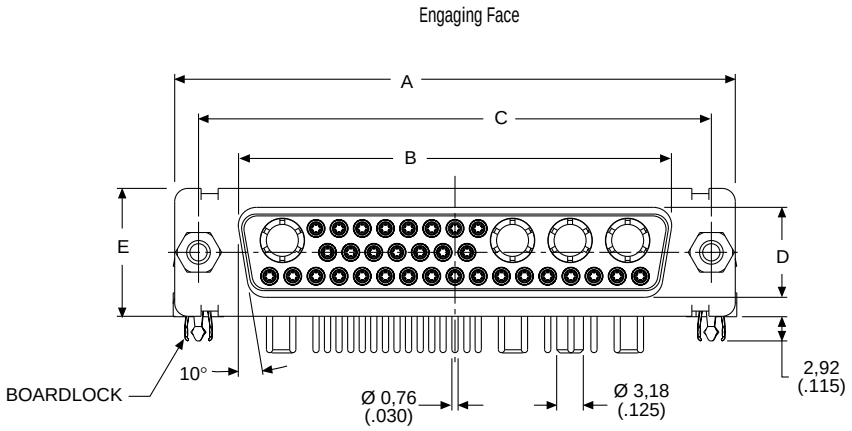


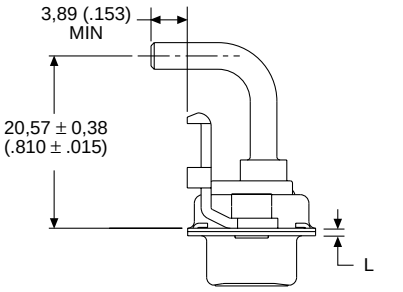


Screw lock, boardlock, and signal contacts removed for clarity

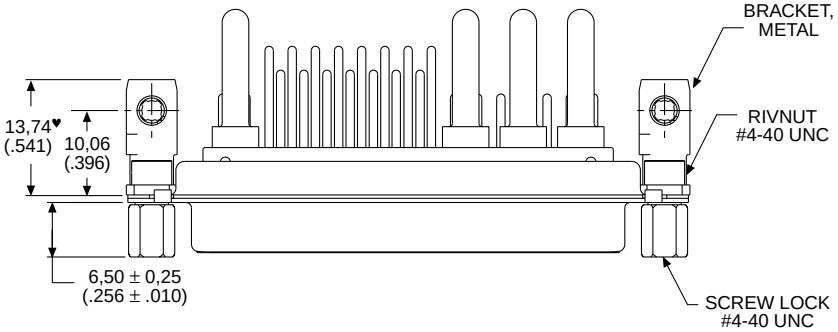


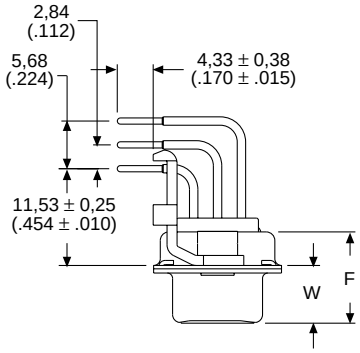


Screw lock, boardlock, and high power contact removed for clarity

Note: ♥ Dimension varies with alternate bracket configuration, see Reader's Resource page 226.

Dimensions

| Shell Size | A ±0,38 (.015) | B ±0,13 (.005) | C ±0,13 (.005) | D ±0,13 (.005) | E ±0,38 (.015) | F ±0,25 (.010) | W ±0,38 (.015) | L ±0,25 (.010) |
|---|---|---|---|---|---|---|---|---|
| DD | 66,93 (2.635) | 52,42 (2.064) | 61,11 (2.406) | 10,74 (.423) | 15,37 (.605) | 10,90 (.429) | 6,94 (.273) | 0,76 (.030) |

## 40 A High Power Straight PCB (Sizes DE-DC)

Plug

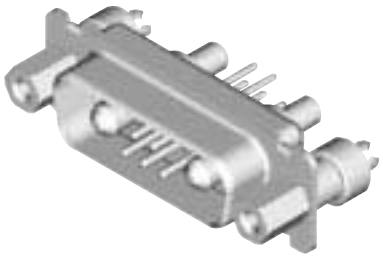

Reader's Resource

For contact cavity arrangements, see page 222.
For P.C. hole patterns, see pages 254-255.
For panel cutouts, see page 221.
For hardware views (Standard), see page 226.

Part Numbers with Standoff #4-40 UNC

| Shell Size | Layout | Part Number Without Screw Locks Without Boardlocks | Part Number Without Screw Locks With Boardlocks | Part Number With Screw Locks With Boardlocks |
|---|---|---|---|---|
| DE | 5W1 | DEMMV5H1PN | DEMMZ5H1PN | DEMMN5H1PN |
| DA | 7W2 | DAMMV7H2PN | DAMMZ7H2PN | DAMMN7H2PN |
| DA | 11W1 | DAMMV11H1PN | DAMMZ11H1PN | DAMMN11H1PN |
| DA | 3W3 | DAMMV3H3PN | DAMMZ3H3PN | DAMMN3H3PN |
| DA | 3WK3♣ | DAMMV3HK3PNTM | DAMMZ3HK3PNTM | DAMMN3HK3PNTM |
| DB | 5W5 | DBMMV5H5PN | DBMMZ5H5PN | DBMMN5H5PN |
| DB | 9W4 | DBMMV9H4PN | DBMMZ9H4PN | DBMMN9H4PN |
| DB | 13W3 | DBMMV13H3PN | DBMMZ13H3PN | DBMMN13H3PN |
| DB | 17W2 | DBMMV17H2PN | DBMMZ17H2PN | DBMMN17H2PN |
| DB | 21W1 | DBMMV21H1PN | DBMMZ21H1PN | DBMMN21H1PN |
| DC | 8W8 | DCMMV8H8PN | DCMMZ8H8PN | DCMMN8H8PN |
| DC | 13W6 | DCMMV13H6PN | DCMMZ13H6PN | DCMMN13H6PN |
| DC | 17W5 | DCMMV17H5PN | DCMMZ17H5PN | DCMMN17H5PN |
| DC | 21WA4 | DCMMV21HA4PN | DCMMZ21HA4PN | DCMMN21HA4PN |
| DC | 25W3 | DCMMV25H3PN | DCMMZ25H3PN | DCMMN25H3PN |
| DC | 27W2 | DCMMV27H2PN | DCMMZ27H2PN | DCMMN27H2PN |

Notes: For DD shell sizes, see page 160.
♣ Keyed.

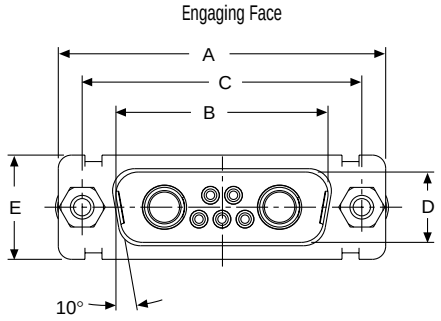


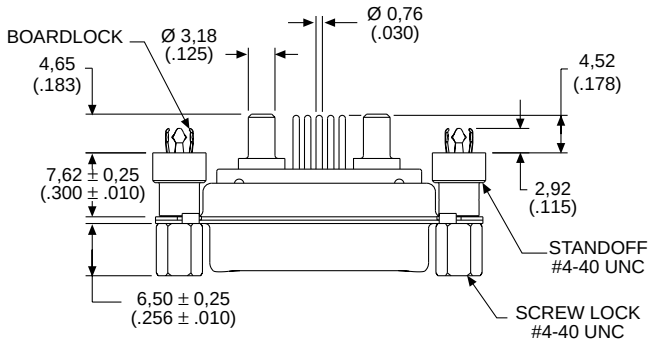


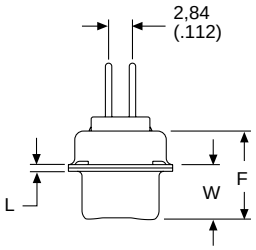


Screw lock, boardlock and high power contact removed for clarity

Dimensions

| Shell Size | A ±0,38 (.015) | B ±0,13 (.005) | C ±0,13 (.005) | D ±0,13 (.005) | E ±0,38 (.015) | F ±0,25 (.010) | W ±0,368 (.0145) | W ±0,41 (.016) | L ±0,25 (.010) |
|---|---|---|---|---|---|---|---|---|---|
| DE | 30,81 (1.213) | 16,92 (.666) | 24,99 (.984) | 8,36 (.329) | 12,55 (.494) | 10,72 (.422) | 6,693 (.2635) | — | 0,76 (.030) |
| DA | 39,14 (1.541) | 25,25 (.994) | 33,32 (1.312) | 8,36 (.329) | 12,55 (.494) | 10,72 (.422) | 6,693 (.2635) | — | 0,76 (.030) |
| DB | 53,04 (2.088) | 38,96 (1.534) | 47,04 (1.852) | 8,36 (.329) | 12,55 (.494) | 10,82 (.426) | — | 6,84 (.269) | 0,99 (.039) |
| DC | 69,32 (2.729) | 55,42 (2.182) | 63,50 (2.500) | 8,36 (.329) | 12,55 (.494) | 10,82 (.426) | — | 6,84 (.269) | 0,99 (.039) |



Dimensions are shown in mm (inch)
Dimensions subject to change

## 40 A High Power Straight PCB (Sizes DE-DC)

Receptacle

Reader's Resource
For contact cavity arrangements, see page 223.
For P.C. hole patterns, see pages 257-258.
For panel cutouts, see page 221.
For hardware views (Standard), see page 226.

Part Numbers with Standoff #4-40 UNC

| Shell Size | Layout | Part Number Without Screw Locks Without Boardlocks | Part Number Without Screw Locks With Boardlocks | Part Number With Screw Locks With Boardlocks |
|---|---|---|---|---|
| DE | 5W1 | DEMMV5H1SN | DEMMZ5H1SN | DEMMN5H1SN |
| DA | 7W2 | DAMMV7H2SN | DAMMZ7H2SN | DAMMN7H2SN |
| DA | 11W1 | DAMMV11H1SN | DAMMZ11H1SN | DAMMN11H1SN |
| DA | 3W3 | DAMMV3H3SN | DAMMZ3H3SN | DAMMN3H3SN |
| DA | 3WK3♣ | DAMMV3HK3SNTM | DAMMZ3HK3SNTM | DAMMN3HK3SNTM |
| DB | 5W5 | DBMMV5H5SN | DBMMZ5H5SN | DBMMN5H5SN |
| DB | 9W4 | DBMMV9H4SN | DBMMZ9H4SN | DBMMN9H4SN |
| DB | 13W3 | DBMMV13H3SN | DBMMZ13H3SN | DBMMN13H3SN |
| DB | 17W2 | DBMMV17H2SN | DBMMZ17H2SN | DBMMN17H2SN |
| DB | 21W1 | DBMMV21H1SN | DBMMZ21H1SN | DBMMN21H1SN |
| DC | 8W8 | DCMMV8H8SN | DCMMZ8H8SN | DCMMN8H8SN |
| DC | 13W6 | DCMMV13H6SN | DCMMZ13H6SN | DCMMN13H6SN |
| DC | 17W5 | DCMMV17H5SN | DCMMZ17H5SN | DCMMN17H5SN |
| DC | 21WA4 | DCMMV21HA4SN | DCMMZ21HA4SN | DCMMN21HA4SN |
| DC | 25W3 | DCMMV25H3SN | DCMMZ25H3SN | DCMMN25H3SN |
| DC | 27W2 | DCMMV27H2SN | DCMMZ27H2SN | DCMMN27H2SN |

Notes: For DD shell sizes, see page 161.
♣ Keyed.

Engaging Face

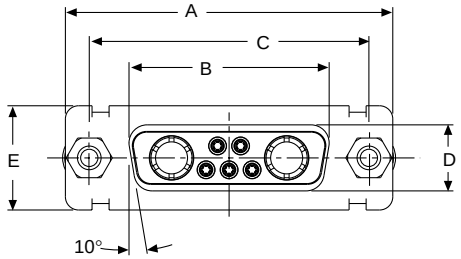


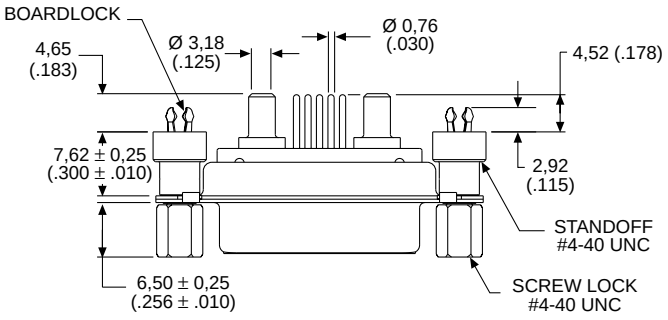


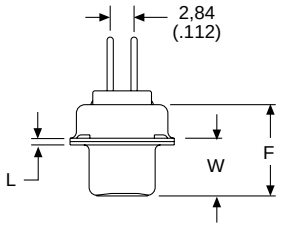


Screw lock, boardlock and high power contact removed for clarity

Dimensions

| Shell Size | A ±0,38 (.015) | B ±0,13 (.005) | C ±0,13 (.005) | D ±0,13 (.005) | E ±0,38 (.015) | F ±0,25 (.010) | W ±0,38 (.015) | L ±0,25 (.010) |
|---|---|---|---|---|---|---|---|---|
| DE | 30,81 (1.213) | 16,33 (.643) | 24,99 (.984) | 7,90 (.311) | 12,55 (.494) | 10,90 (.429) | 6,94 (.273) | 0,76 (.030) |
| DA | 39,14 (1.541) | 24,66 (.971) | 33,32 (1.312) | 7,90 (.311) | 12,55 (.494) | 10,90 (.429) | 6,94 (.273) | 0,76 (.030) |
| DB | 53,04 (2.088) | 38,38 (1.511) | 47,04 (1.852) | 7,90 (.311) | 12,55 (.494) | 10,90 (.429) | 6,94 (.273) | 0,76 (.030) |
| DC | 69,32 (2.729) | 54,84 (2.159) | 63,50 (2.500) | 7,90 (.311) | 12,55 (.494) | 10,90 (.429) | 6,94 (.273) | 0,76 (.030) |

## 40 A High Power Straight PCB (Size DD)

Plug

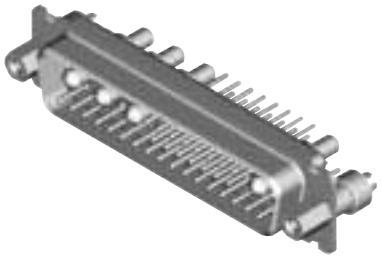

Part Numbers with Standoff #4-40 UNC

| Shell Size | Layout | Part Number Without Screw Locks Without Boardlocks | Part Number Without Screw Locks With Boardlocks | Part Number With Screw Locks With Boardlocks |
|---|---|---|---|---|
| DD | 24W7 | DDMMV24H7PN | DDMMZ24H7PN | DDMMN24H7PN |
| DD | 36W4 | DDMMV36H4PN | DDMMZ36H4PN | DDMMN36H4PN |
| DD | 43W2 | DDMMV43H2PN | DDMMZ43H2PN | DDMMN43H2PN |
| DD | 47W1 | DDMMV47H1PN | DDMMZ47H1PN | DDMMN47H1PN |

Reader's Resource
For contact cavity arrangements, see page 222.
For P.C. hole patterns, see page 256.
For panel cutouts, see page 221.
For hardware views (Standard), see page 226.

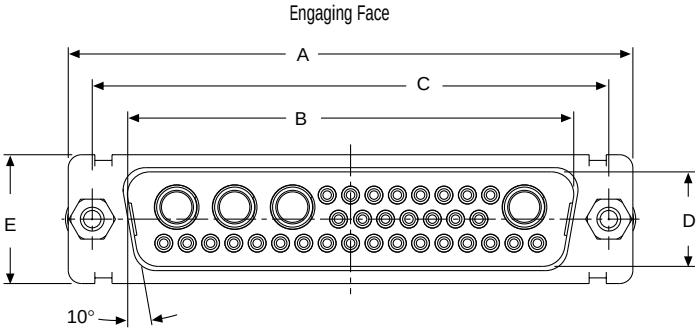


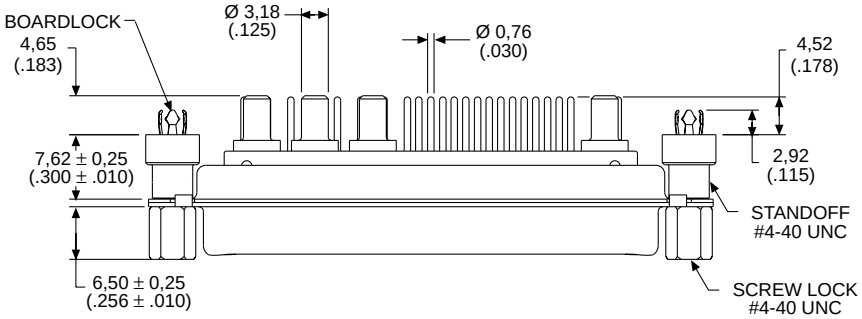


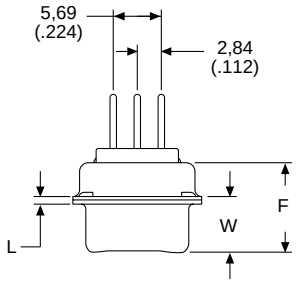


Screw lock, boardlock, and high power contact removed for clarity

Dimensions

| Shell Size | A ±0,38 (.015) | B ±0,13 (.005) | C ±0,13 (.005) | D ±0,13 (.005) | E ±0,38 (.015) | F ±0,25 (.010) | W ±0,41 (.016) | L ±0,25 (.010) |
|---|---|---|---|---|---|---|---|---|
| DD | 66,93 (2.635) | 52,81 (2.079) | 61,11 (2.406) | 11,07 (.436) | 15,37 (.605) | 10,82 (.426) | 6,84 (.269) | 0,99 (.039) |



Dimensions are shown in mm (inch)
Dimensions subject to change

## 40 A High Power Straight PCB (Size DD)

Receptacle

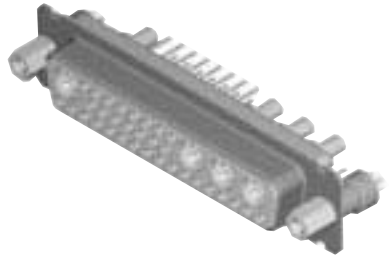

Part Numbers with Standoff #4-40 UNC

| Shell Size | Layout | Part Number Without Screw Locks Without Boardlocks | Part Number Without Screw Locks With Boardlocks | Part Number With Screw Locks With Boardlocks |
|---|---|---|---|---|
| DD | 24W7 | DDMMV24H7SN | DDMMZ24H7SN | DDMMN24H7SN |
| DD | 36W4 | DDMMV36H4SN | DDMMZ36H4SN | DDMMN36H4SN |
| DD | 43W2 | DDMMV43H2SN | DDMMZ43H2SN | DDMMN43H2SN |
| DD | 47W1 | DDMMV47H1SN | DDMMZ47H1SN | DDMMN47H1SN |

Reader's Resource

For contact cavity arrangements, see page 223.
For P.C. hole patterns, see page 259.
For panel cutouts, see page 221.
For hardware views (Standard), see page 226.

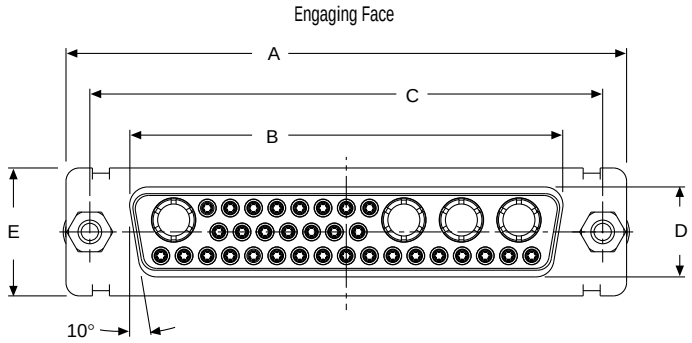


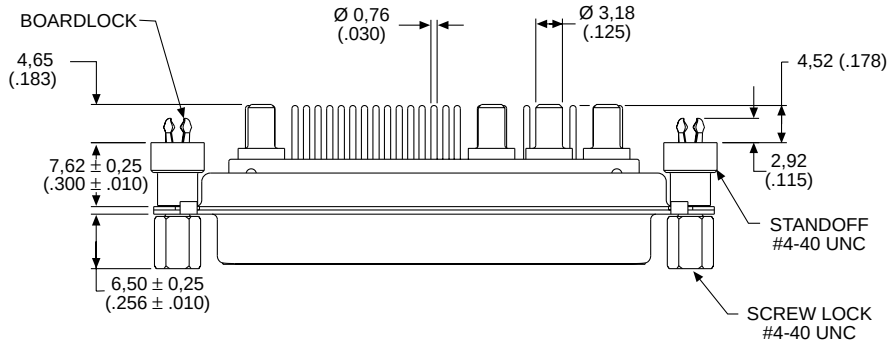


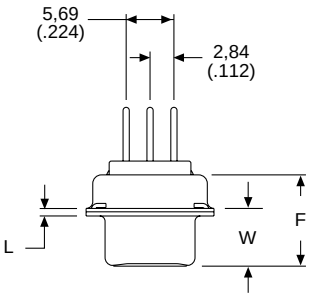


Screw lock, boardlock and high power contact removed for clarity

Dimensions

| Shell Size | A ±0,38 (.015) | B ±0,13 (.005) | C ±0,13 (.005) | D ±0,13 (.005) | E ±0,38 (.015) | F ±0,25 (.010) | W ±0,38 (.015) | L ±0,25 (.010) |
|---|---|---|---|---|---|---|---|---|
| DD | 66,93 (2.635) | 52,42 (2.064) | 61,11 (2.406) | 10,74 (.423) | 15,37 (.605) | 10,90 (.429) | 6,94 (.273) | 0,76 (.030) |

## High Voltage Straight PCB (Sizes DE-DC)

Plug

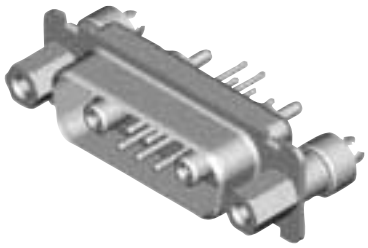

Reader's Resource
For contact cavity arrangements, see page 222.
For P.C. hole patterns, see pages 254-255.
For panel cutouts, see page 221.
For hardware views (Standard), see page 226.

Part Numbers with Standoff #4-40 UNC

| Shell Size | Layout | Part Number Without Screw Locks Without Boardlocks | Part Number Without Screw Locks With Boardlocks | Part Number With Screw Locks With Boardlocks |
|---|---|---|---|---|
| DE | 5W1 | DEMMV5V1PN | DEMMZ5V1PN | DEMMN5V1PN |
| DA | 7W2 | DAMMV7V2PN | DAMMZ7V2PN | DAMMN7V2PN |
| DA | 11W1 | DAMMV11V1PN | DAMMZ11V1PN | DAMMN11V1PN |
| DA | 3W3 | DAMMV3V3PN | DAMMZ3V3PN | DAMMN3V3PN |
| DA | 3WK3♣ | DAMMV3VK3PNTM | DAMMZ3VK3PNTM | DAMMN3VK3PNTM |
| DB | 5W5 | DBMMV5V5PN | DBMMZ5V5PN | DBMMN5V5PN |
| DB | 9W4 | DBMMV9V4PN | DBMMZ9V4PN | DBMMN9V4PN |
| DB | 13W3 | DBMMV13V3PN | DBMMZ13V3PN | DBMMN13V3PN |
| DB | 17W2 | DBMMV17V2PN | DBMMZ17V2PN | DBMMN17V2PN |
| DB | 21W1 | DBMMV21V1PN | DBMMZ21V1PN | DBMMN21V1PN |
| DC | 8W8 | DCMMV8V8PN | DCMMZ8V8PN | DCMMN8V8PN |
| DC | 13W6 | DCMMV13V6PN | DCMMZ13V6PN | DCMMN13V6PN |
| DC | 17W5 | DCMMV17V5PN | DCMMZ17V5PN | DCMMN17V5PN |
| DC | 21WA4 | DCMMV21VA4PN | DCMMZ21VA4PN | DCMMN21VA4PN |
| DC | 25W3 | DCMMV25V3PN | DCMMZ25V3PN | DCMMN25V3PN |
| DC | 27W2 | DCMMV27V2PN | DCMMZ27V2PN | DCMMN27V2PN |

Notes: For DD shell size, see page 164.
♣ Keyed.

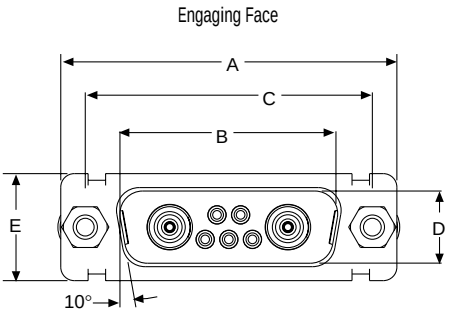


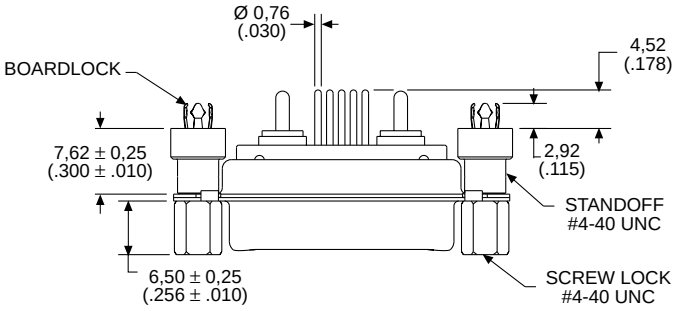


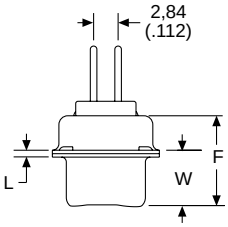


Hardware and high voltage contact removed for clarity

Dimensions

| Plug Shell Size | A ±0,38 (.015) | B ±0,13 (.005) | C ±0,13 (.005) | D ±0,13 (.005) | E ±0,38 (.015) | F ±0,25 (.010) | W ±0,37 (.015) | W ±0,41 (.016) | L ±0,25 (.010) |
|---|---|---|---|---|---|---|---|---|---|
| DE | 30,81 (1.213) | 16,92 (.666) | 24,99 (.984) | 8,36 (.329) | 12,55 (.494) | 10,72 (.422) | 6,69 (.264) | — | 0,76 (.030) |
| DA | 39,14 (1.541) | 25,25 (.994) | 33,32 (1.312) | 8,36 (.329) | 12,55 (.494) | 10,72 (.422) | 6,69 (.264) | — | 0,76 (.030) |
| DB | 53,04 (2.088) | 38,96 (1.534) | 47,04 (1.852) | 8,36 (.329) | 12,55 (.494) | 10,82 (.426) | — | 6,84 (.269) | 0,99 (.039) |
| DC | 69,32 (2.729) | 55,42 (2.182) | 63,50 (2.500) | 8,36 (.329) | 12,55 (.494) | 10,82 (.426) | — | 6,84 (.269) | 0,99 (.039) |



Dimensions are shown in mm (inch)
Dimensions subject to change

## High Voltage Straight PCB (Sizes DE-DC)

Receptacle

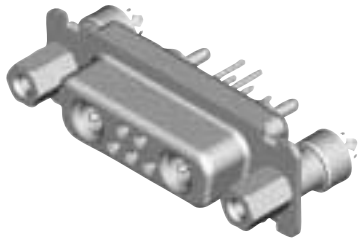

Reader's Resource
For contact cavity arrangements, see page 223.
For P.C. hole patterns, see pages 257-258.
For panel cutouts, see page 221.
For hardware views (Standard), see page 226.

Part Numbers with Standoff #4-40 UNC

| Shell Size | Layout | Part Number Without Screw Locks Without Boardlocks | Part Number Without Screw Locks With Boardlocks | Part Number With Screw Locks With Boardlocks |
|---|---|---|---|---|
| DE | 5W1 | DEMMV5V1SN | DEMMZ5V1SN | DEMMN5V1SN |
| DA | 7W2 | DAMMV7V2SN | DAMMZ7V2SN | DAMMN7V2SN |
| DA | 11W1 | DAMMV11V1SN | DAMMZ11V1SN | DAMMN11V1SN |
| DA | 3W3 | DAMMV3V3SN | DAMMZ3V3SN | DAMMN3V3SN |
| DA | 3WK3♣ | DAMMV3VK3SNTM | DAMMZ3VK3SNTM | DAMMN3VK3SNTM |
| DB | 5W5 | DBMMV5V5SN | DBMMZ5V5SN | DBMMN5V5SN |
| DB | 9W4 | DBMMV9V4SN | DBMMZ9V4SN | DBMMN9V4SN |
| DB | 13W3 | DBMMV13V3SN | DBMMZ13V3SN | DBMMN13V3SN |
| DB | 17W2 | DBMMV17V2SN | DBMMZ17V2SN | DBMMN17V2SN |
| DB | 21W1 | DBMMV21V1SN | DBMMZ21V1SN | DBMMN21V1SN |
| DC | 8W8 | DCMMV8V8SN | DCMMZ8V8SN | DCMMN8V8SN |
| DC | 13W6 | DCMMV13V6SN | DCMMZ13V6SN | DCMMN13V6SN |
| DC | 17W5 | DCMMV17V5SN | DCMMZ17V5SN | DCMMN17V5SN |
| DC | 21WA4 | DCMMV21VA4SN | DCMMZ21VA4SN | DCMMN21VA4SN |
| DC | 25W3 | DCMMV25V3SN | DCMMZ25V3SN | DCMMN25V3SN |
| DC | 27W2 | DCMMV27V2SN | DCMMZ27V2SN | DCMMN27V2SN |

Notes: For DD shell size, see page 165.
♣ Keyed.

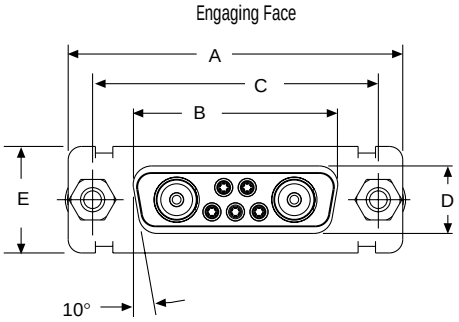


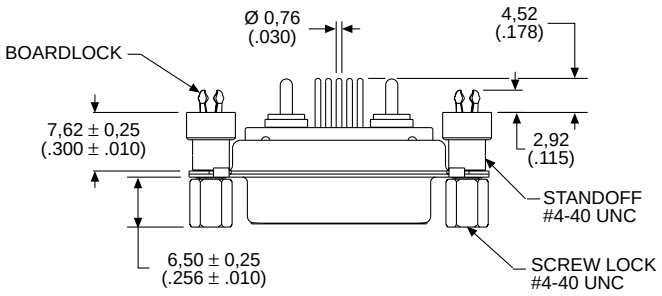


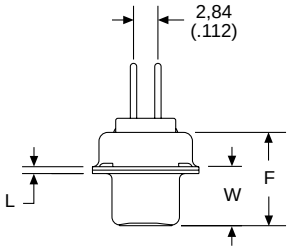


Hardware and high voltage contact removed for clarity.

Dimensions

| Receptacle Shell Size | A ±0,38 (.015) | B ±0,13 (.005) | C ±0,13 (.005) | D ±0,13 (.005) | E ±0,38 (.015) | F ±0,25 (.010) | W ±0,38 (.015) | L ±0,25 (.010) |
|---|---|---|---|---|---|---|---|---|
| DE | 30,81 (1.213) | 16,33 (.643) | 24,99 (.984) | 7,90 (.311) | 12,55 (.494) | 10,90 (.429) | 6,94 (.273) | 0,76 (.030) |
| DA | 39,14 (1.541) | 24,66 (.971) | 33,32 (1.312) | 7,90 (.311) | 12,55 (.494) | 10,90 (.429) | 6,94 (.273) | 0,76 (.030) |
| DB | 53,04 (2.088) | 38,38 (1.511) | 47,04 (1.852) | 7,90 (.311) | 12,55 (.494) | 10,90 (.429) | 6,94 (.273) | 0,76 (.030) |
| DC | 69,32 (2.729) | 54,84 (2.159) | 63,50 (2.500) | 7,90 (.311) | 12,55 (.494) | 10,90 (.429) | 6,94 (.273) | 0,76 (.030) |

## High Voltage Straight PCB (Size DD)

Plug

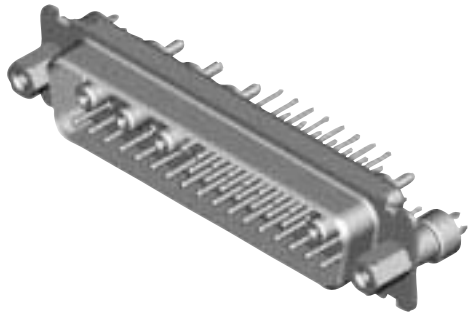

Part Numbers with Standoff #4-40 UNC

| Shell Size | Layout | Part Number Without Screw Locks Without Boardlocks | Part Number Without Screw Locks With Boardlocks | Part Number With Screw Locks With Boardlocks |
|---|---|---|---|---|
| DD | 24W7 | DDMMV24V7PN | DDMMZ24V7PN | DDMMN24V7PN |
| DD | 36W4 | DDMMV36V4PN | DDMMZ36V4PN | DDMMN36V4PN |
| DD | 43W2 | DDMMV43V2PN | DDMMZ43V2PN | DDMMN43V2PN |
| DD | 47W1 | DDMMV47V1PN | DDMMZ47V1PN | DDMMN47V1PN |

Reader's Resource
For contact cavity arrangements, see page 222.
For P.C. hole patterns, see page 256.
For panel cutouts, see page 221.
For hardware views (Standard), see page 226.

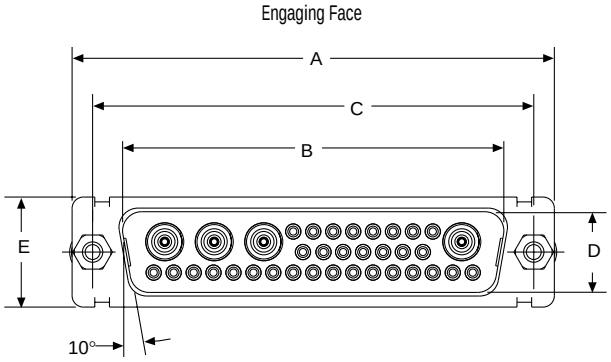


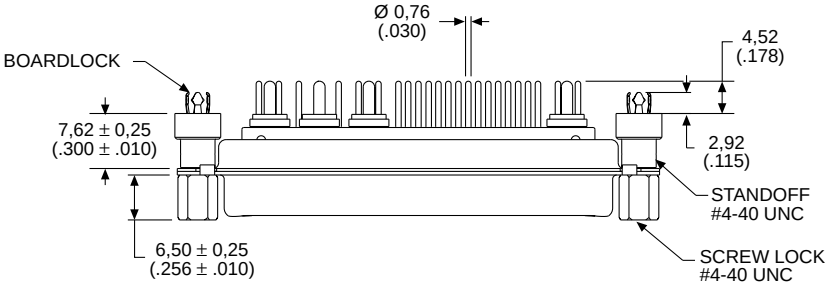


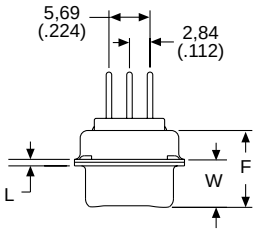


Hardware and high voltage contact removed for clarity.

Dimensions

| Plug Shell Size | A ±0,38 (.015) | B ±0,13 (.005) | C ±0,13 (.005) | D ±0,13 (.005) | E ±0,38 (.015) | F ±0,25 (.010) | W ±0,41 (.016) | L ±0,25 (.010) |
|---|---|---|---|---|---|---|---|---|
| DD | 66,93 (2.635) | 52,81 (2.079) | 61,11 (2.406) | 11,07 (.436) | 15,37 (.605) | 10,82 (.426) | 6,84 (.269) | 0,99 (.039) |



Dimensions are shown in mm (inch)
Dimensions subject to change

## High Voltage Straight PCB (Size DD)

Receptacle

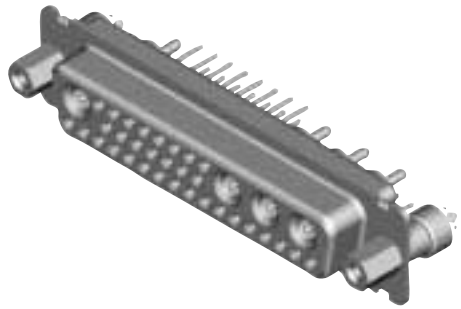

Part Numbers with Standoff #4-40 UNC

| Shell Size | Layout | Part Number Without Screw Locks Without Boardlocks | Part Number Without Screw Locks With Boardlocks | Part Number With Screw Locks With Boardlocks |
|---|---|---|---|---|
| DD | 24W7 | DDMMV24V7SN | DDMMZ24V7SN | DDMMN24V7SN |
| DD | 36W4 | DDMMV36V4SN | DDMMZ36V4SN | DDMMN36V4SN |
| DD | 43W2 | DDMMV43V2SN | DDMMZ43V2SN | DDMMN43V2SN |
| DD | 47W1 | DDMMV47V1SN | DDMMZ47V1SN | DDMMN47V1SN |

Reader's Resource
For contact cavity arrangements, see page 223.
For P.C. hole patterns, see page 259.
For panel cutouts, see page 221.
For hardware views (Standard), see page 226.

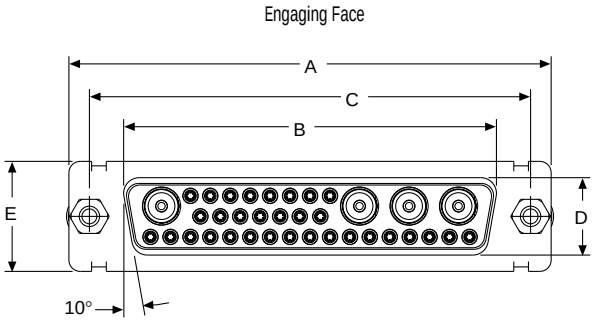


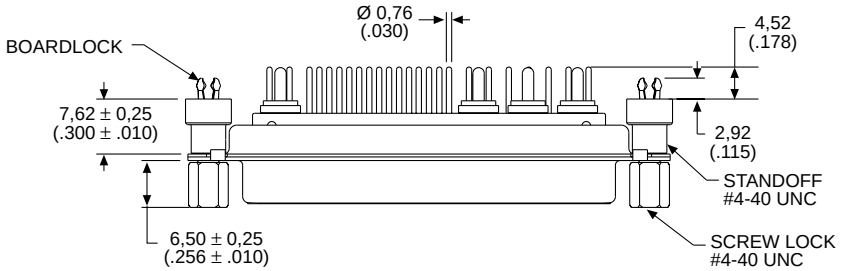


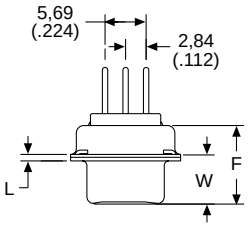


Hardware and high voltage contacts removed for clarity

Dimensions

| Receptacle Shell Size | A ±0,38 (.015) | B ±0,13 (.005) | C ±0,13 (.005) | D ±0,13 (.005) | E ±0,38 (.015) | F ±0,25 (.010) | W ±0,38 (.015) | L ±0,25 (.010) |
|---|---|---|---|---|---|---|---|---|
| DD | 66,93 (2.635) | 52,42 (2.064) | 61,11 (2.406) | 10,74 (.423) | 15,37 (.605) | 10,90 (.429) | 6,94 (.273) | 0,76 (.030) |

## Cable Solder Cup

### Plug

Reader's Resource
For contact cavity arrangements, see page 222.
For panel cutouts, see page 221.
For hardware views (Standard), see page 226.

### Part Numbers

| Shell Size | Layout | Through Hole | Dual Float Mount | Clinch Nut #4-40 UNC |
|---|---|---|---|---|
| DE | 5W1 | DEMM5W1P | DEMMY5W1P | DEMME5W1P |
| DA | 7W2 | DAMM7W2P | DAMMY7W2P | DAMME7W2P |
| DA | 11W1 | DAMM11W1P | DAMMY11W1P | DAMME11W1P |
| DA | 3W3 | DAMM3W3P | DAMMY3W3P | DAMME3W3P |
| DA | 3WK3♣ | DAMM3WK3P | DAMMY3WK3P | DAMME3WK3P |
| DB | 5W5 | DBMMP5W5P | DBMMY5W5P | DBMME5W5P |
| DB | 9W4 | DBMM9W4P | DBMMY9W4P | DBMME9W4P |
| DB | 13W3 | DBMM13W3P | DBMMY13W3P | DBMME13W3P |
| DB | 17W2 | DBMM17W2P | DBMMY17W2P | DBMME17W2P |
| DB | 21W1 | DBMM21W1P | DBMMY21W1P | DBMME21W1P |
| DC | 8W8 | DCMM8W8P | DCMMY8W8P | DCMME8W8P |
| DC | 13W6 | DCMM13W6P | DCMMY13W6P | DCMME13W6P |
| DC | 17W5 | DCMM17W5P | DCMMY17W5P | DCMME17W5P |
| DC | 21WA4 | DCMM21WA4P | DCMMY21WA4P | DCMME21WA4P |
| DC | 25W3 | DCMM25W3P | DCMMY25W3P | DCMME25W3P |
| DC | 27W2 | DCMM27W2P | DCMMY27W2P | DCMME27W2P |
| DD | 24W7 | DDMM24W7P | DDMMY24W7P | DDMME24W7P |
| DD | 36W4 | DDMM36W4P | DDMMY36W4P | DDMME36W4P |
| DD | 43W2 | DDMM43W2P | DDMMY43W2P | DDMME43W2P |
| DD | 47W1 | DDMM47W1P | DDMMY47W1P | DDMME47W1P |

Note: ♣ Keyed.

Engaging Face

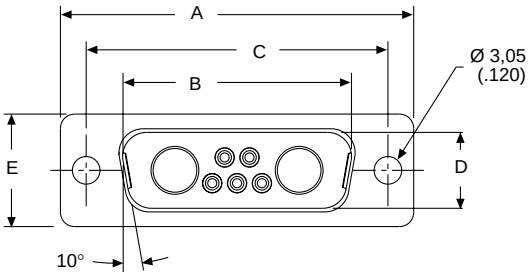


DD Configuration

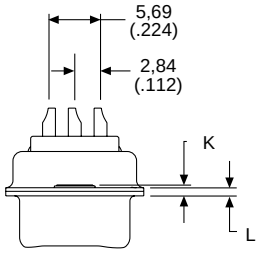


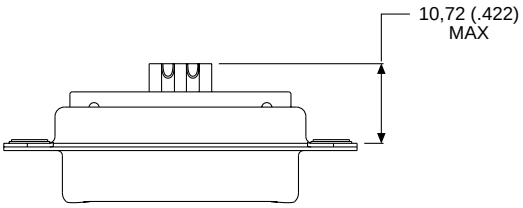


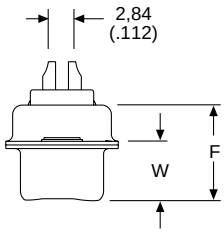


### Dimensions

| Shell Size | A ±0,38 (.015) | B ±0,13 (.005) | C ±0,13 (.005) | D ±0,13 (.005) | E ±0,38 (.015) | F ±0,25 (.010) | W ±0,368 (.0145) | W ±0,41 (.016) | K ±0,317 (.0125) | K ±0,25 (.010) | L ±0,25 (.010) |
|---|---|---|---|---|---|---|---|---|---|---|---|
| DE | 30,81 (1.213) | 16,92 (.666) | 24,99 (.984) | 8,36 (.329) | 12,55 (.494) | 10,72 (.422) | 6,693 (.2635) | — | 1,206 (.0475) | — | 0,76 (.030) |
| DA | 39,14 (1.541) | 25,25 (.994) | 33,32 (1.312) | 8,36 (.329) | 12,55 (.494) | 10,72 (.422) | 6,693 (.2635) | — | 1,206 (.0475) | — | 0,76 (.030) |
| DB | 53,04 (2.088) | 38,96 (1.534) | 47,04 (1.852) | 8,36 (.329) | 12,55 (.494) | 10,82 (.426) | — | 6,84 (.269) | — | 1,52 (.060) | 0,99 (.039) |
| DC | 69,32 (2.729) | 55,42 (2.182) | 63,50 (2.500) | 8,36 (.329) | 12,55 (.494) | 10,82 (.426) | — | 6,84 (.269) | — | 1,52 (.060) | 0,99 (.039) |
| DD | 66,93 (2.635) | 52,81 (2.079) | 61,11 (2.406) | 11,07 (.436) | 15,37 (.605) | 10,82 (.426) | — | 6,84 (.269) | — | 1,52 (.060) | 0,99 (.039) |



Dimensions are shown in mm (inch)
Dimensions subject to change

## Cable Solder Cup

Receptacle

Reader's Resource

For contact cavity arrangements, see page 223.
For panel cutouts, see page 221.
For hardware views (Standard), see page 226.

Part Numbers

| Shell Size | Layout | Through Hole | Dual Float Mount | Clinch Nut #4-40 UNC |
|---|---|---|---|---|
| DE | 5W1 | DEMM5W1S | DEMMY5W1S | DEMME5W1S |
| DA | 7W2 | DAMM7W2S | DAMMY7W2S | DAMME7W2S |
| DA | 11W1 | DAMM11W1S | DAMMY11W1S | DAMME11W1S |
| DA | 3W3 | DAMM3W3S | DAMMY3W3S | DAMME3W3S |
| DA | 3WK3♣ | DAMM3WK3S | DAMMY3WK3S | DAMME3WK3S |
| DB | 5W5 | DBMM5W5S | DBMMY5W5S | DBMME5W5S |
| DB | 9W4 | DBMM9W4S | DBMMY9W4S | DBMME9W4S |
| DB | 13W3 | DBMM13W3S | DBMMY13W3S | DBMME13W3S |
| DB | 17W2 | DBMM17W2S | DBMMY17W2S | DBMME17W2S |
| DB | 21W1 | DBMM21W1S | DBMMY21W1S | DBMME21W1S |
| DC | 8W8 | DCMM8W8S | DCMMY8W8S | DCMME8W8S |
| DC | 13W6 | DCMM13W6S | DCMMY13W6S | DCMME13W6S |
| DC | 17W5 | DCMM17W5S | DCMMY17W5S | DCMME17W5S |
| DC | 21WA4 | DCMM21WA4S | DCMMY21WA4S | DCMME21WA4S |
| DC | 25W3 | DCMM25W3S | DCMMY25W3S | DCMME25W3S |
| DC | 27W2 | DCMM27W2S | DCMMY27W2S | DCMME27W2S |
| DD | 24W7 | DCMM24W7S | DCMMY24W7S | DCMME24W7S |
| DD | 36W4 | DCMM36W4S | DCMMY36W4S | DCMME36W4S |
| DD | 43W2 | DCMM43W2S | DCMMY43W2S | DCMME43W2S |
| DD | 47W1 | DCMM47W1S | DCMMY47W1S | DCMME47W1S |

Note: ♣ Keyed.

Engaging Face

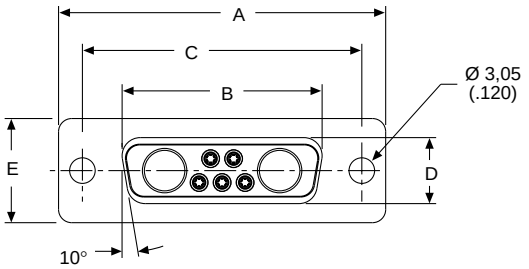


DD Configuration

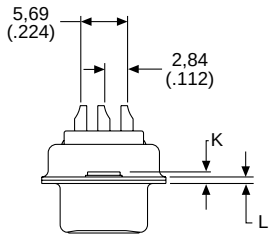


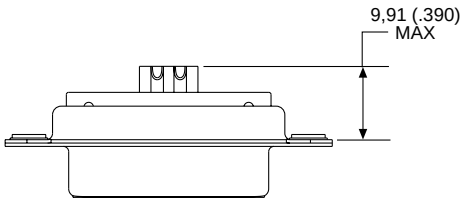


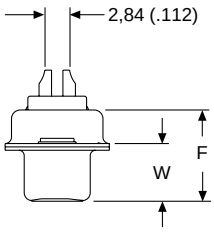


Dimensions

| Shell Size | A ±0,38 (.015) | B ±0,13 (.005) | C ±0,13 (.005) | D ±0,13 (.005) | E ±0,38 (.015) | F ±0,25 (.010) | W ±0,38 (.015) | K ±0,318 (.0125) | L ±0,25 (.010) |
|---|---|---|---|---|---|---|---|---|---|
| DE | 30,81 (1.123) | 16,33 (.643) | 24,99 (.984) | 7,90 (.311) | 12,55 (.494) | 10,90 (.429) | 6,94 (.273) | 1,206 (.0475) | 0,76 (.030) |
| DA | 39,14 (1.541) | 24,66 (.971) | 33,32 (1.312) | 7,90 (.311) | 12,55 (.494) | 10,90 (.429) | 6,94 (.273) | 1,206 (.0475) | 0,76 (.030) |
| DB | 53,04 (2.088) | 38,38 (1.511) | 47,04 (1.852) | 7,90 (.311) | 12,55 (.494) | 10,90 (.429) | 6,94 (.273) | 1,206 (.0475) | 0,76 (.030) |
| DC | 69,32 (2.729) | 54,84 (2.159) | 63,50 (2.500) | 7,90 (.311) | 12,55 (.494) | 10,90 (.429) | 6,94 (.273) | 1,206 (.0475) | 0,76 (.030) |
| DD | 66,93 (2.635) | 52,42 (2.064) | 61,11 (2.406) | 10,74 (.423) | 15,37 (.605) | 10,90 (.429) | 6,94 (.273) | 1,206 (.0475) | 0,76 (.030) |

ITT Cannon has a long history of providing high performance D Subminiature connectors for space applications (qualified by NASA/GFSC and the European Space Agency). Space/High Reliabilty D*M and D*MA connectors meet stringent tests for outgassing and residual magnetism and are suitable for use in space, medical, and high performance military/aerospace applications. D*M and D*MA connectors are designed to be comparable to MIL-C-24308. The newest product group is High Density D*MA crimp connectors.

Applications
- Space - Low/High Orbit Satellites
- Medical

## Product Features

Non-Magnetic

No Outgassing

## Specifications

| | |
|---|---|
| Temperature Rating | −65° at 125°C |
| Signal Contact Current Rating | 5 A (20 AWG) |
| Signal Contact Resistance | 55 millivolt max. at 7.5 A test current |
| Wire Accommodation (Solder) | 20 AWG max. |
| Wire Accommodation (Crimp) | 18/30 AWG |
| Coaxial Impedance | 50 Ohm |
| Loss VSWR | Less than 1,3 - 1,0 up to 500 Mhz |
| Coaxial Insertion Loss | 1db loss at 500 Mhz |

## Dielectric Withstanding Voltage

| | | Altitude (meter/feet) | | | | | | | |
|---|---|---|---|---|---|---|---|---|---|
| | | Sea Level | Sea Level | 6 096/20 000 | 6 096/20 000 | 15 240/50 000 | 15 240/50 000 | 21 336/70 000 | 21 336/70 000 |
| Average Flashover | | 1500/1700 | 1500/1700 | 1000/1000 | 1000/1000 | 500/650 | 500/650 | 500/500 | 500/500 |
| Test | | 1000/1250 | 1000/1250 | 650/750 | 650/750 | 325/475 | 325/475 | 325/375 | 325/375 |
| Type of Contact | | 90° | Straight | 90° | Straight | 90° | Straight | 90° | Straight |
| Center Conductor to Coaxial Shell | Average | 1200 | 1500 | 900 | 1000 | 600 | 700 | 400 | 500 |
| | Flashover Test | 800 | 1000 | 600 | 550 | 400 | 475 | 275 | 325 |
| Coaxial Shell to Nearest Solder Cup Contact | Average | — | 1500 | — | 1500 | — | 900 | — | 650 |
| | Flashover Test | — | 1000 | — | 1000 | — | 800 | — | 425 |
| High Power Contact and/or Coaxial Shell to Plug Shell | Average | 1500 | 1500 | 1000 | 1000 | 500 | 500 | 500 | 500 |
| | Flashover Test | 1000 | 1000 | 650 | 650 | 325 | 325 | 325 | 325 |
| Size 20 Signal Contact | Average | 1200 | 1200 | 1000 | 1000 | 650 | 650 | 500 | 500 |
| | Flashover Test | 1250 | 1250 | 750 | 750 | 475 | 475 | 375 | 375 |

All voltage figures are rms AC 60 rms cps. Measured at approximately +25°C, 50% rh. For additional performance specifications refer to 24308-Style.

## Residual Magnetism Level

| Residual Magnetism | Suffix Code |
|---|---|
| 20 000 Gamma | NM |
| 200 Gamma | NMB |

Note: NMC is available by special request. Consult factory for details.



Dimensions are shown in mm (inch)
Dimensions subject to change

## NASA/GSFC Cross Reference

| NASA/GSFC Part Number | ITT Cannon Part Number | NASA/GSFC Part Number | ITT Cannon Part Number | NASA/GSFC Part Number | ITT Cannon Part Number |
|---|---|---|---|---|---|
| GO8P1 | 030-2042-002 | 311-P-10-12S-B-15 | DBM13W3S-NMB-76 | 311-P-10-24P-B-12 | DDM43W2P-NMB-77 |
| GO8S1 | 031-1147-002 | 311-P-10-12S-C-15 | DBM-13W3S-NMC-76 | 311-P-10-24S-C-12 | DDM-43W2S-NMB-77 |
| S-311-P-4/6GCP1 | DM53740-17 | 311-P-10-13P-B-12 | DBM17W2PNMB77 | 311-P-10-24S-C-15 | DDM-43W2S-NMC-76 |
| S-311-P-4/6GCP2 | DM53740-15 | 311-P-10-13P-B-15 | DBM-17W2P-NMB-76 | 311-P-10-25P-C-15 | DDM47W1P-NMC-76 |
| S-311-P-4/6GCP3 | DM53740-16 | 311-P-10-13P-C-12 | DBM17W2P-NMC-77 | 311-P-10-25S-C-15 | DDM-47W1S-NMC-76 |
| S-311-P-4/6GCP4 | DM53740-18 | 311-P-10-13P-C-15 | DBM-17W2P-NMC-76 | 311-P-10-3S-B-12 | DBM25PNMB77 |
| S-311-P-4/6GCRP1 | DM53741-12 | 311-P-10-13S-B-12 | DBM17W2SNMB77 | 311-P-10-3P-B-15 | DBM25PNMB76 |
| S-311-P-4/6GCRP2 | DM53741-11 | 311-P-10-13S-C-12 | DBM-17W2S-NMC-77 | 311-P-10-3P-C-12 | DBM25PNMC77 |
| S-311-P-4/6GCRP3 | DM53741-10 | 311-P-10-13S-C-15 | DBM-17W2S-NMC-76 | 311-P-10-3P-C-15 | DBM25PNMC76 |
| S-311-P-4/6GCRP4 | DM53741-13 | 311-P-10-14P-B-12 | DBM-21W1P-NMB-77 | 311-P-10-3S-B-12 | DBM25PNMB77 |
| S-311-P-4/6GCRS1 | DM53743-18 | 311-P-10-14P-B-15 | DBM-21W1P-NMB-76 | 311-P-10-3S-B-15 | DBM-25S-NMB-76 |
| S-311-P-4/6GCRS2 | DM53743-16 | 311-P-10-14S-B-12 | DBM-21W1S-NMB-77 | 311-P-10-3S-C-12 | DBM-25S-NMC-77 |
| S-311-P-4/6GCRS3 | DM53743-17 | 311-P-10-14S-B-15 | DBM-21W1S-NMB-76 | 311-P-10-3S-C-15 | DBM-25S-NMC-76 |
| S-311-P-4/6GCRS4 | DM53743-19 | 311-P-10-14S-C-15 | DBM-21W1S-NMC-76 | 311-P-10-4P-B-12 | DCM37PNMB77 |
| S-311-P-4/6GCS1 | DM53742-18 | 311-P-10-15P-B-12 | DCM-8W8P-NMB-77 | 311-P-10-4P-B-15 | DCM37PNMB76 |
| S-311-P-4/6GCS2 | DM53742-16 | 311-P-10-15P-B-15 | DCM8W8PNMB76 | 311-P-10-4P-C-12 | DCM-37P-NMC-77 |
| S-311-P-4/6GCS3 | DM53742-17 | 311-P-10-15P-C-12 | DCM-8W8P-NMC-77 | 311-P-10-4P-C-15 | DCM37PNMC76 |
| S-311-P-4/6GCS4 | DM53742-19 | 311-P-10-15P-C-15 | DCM8W8PNMC76 | 311-P-10-4S-B-12 | DCM37SNMB77 |
| S-311-P-4/6GHP6 | DM51157-8 | 311-P-10-15S-B-12 | DCM-8W8S-NMB-77 | 311-P-10-4S-B-15 | DCM-37S-NMB-76 |
| S-311-P-4/6GHRP6 | DM51157-5005 | 311-P-10-15S-B-15 | DCM8W8SNMB76 | 311-P-10-4S-C-12 | DCM-37S-NMC-77 |
| S-311-P-4/6GHRS6 | DM51155-5005 | 311-P-10-15S-C-12 | DCM-8W8S-NMC-77 | 311-P-10-4S-C-15 | DCM-37S-NMC-76 |
| S-311-P-4/6GHS6 | DM51155-7 | 311-P-10-15S-C-15 | DCM-8W8S-MNC-76 | 311-P-10-5P-B-12 | DDM50PNMB77 |
| 311P409-1P-B-12 | DEMA9PNMBK47FO | 311-P-10-16P-B-12 | DCM-13W6P-NMB-77 | 311-P-10-5P-B-15 | DDM50PNMB76 |
| 311P409-1P-B-15 | DEMAK9PNMBK47FO | 311-P-10-16P-B-15 | DCM-13W6P-NMB-76 | 311-P-10-5P-C-12 | DDM-50P-NMC-77 |
| 311P409-1S-B-12 | DEMA9SNMBK47FO | 311-P-10-16P-C-12 | DCM-13W6P-NMC-77 | 311-P-10-5P-C-15 | DDM50PNMC76 |
| 311P409-1S-B-15 | DEMAK9SNMBK47FO | 311-P-10-16P-C-15 | DCM-13W6P-NMC-76 | 311-P-10-5S-B-12 | DDM50SNMB77 |
| 311P409-2P-B-12 | DEMA15PNMBK47FO | 311-P-10-16S-B-12 | DCM-13W6S-NMB-77 | 311-P-10-5S-B-15 | DDM50SNMB76 |
| 311P409-2P-B-15 | DEMAK15PNMBK47FO | 311-P-10-16S-C-12 | DCM-13W6S-NMC-77 | 311-P-10-5S-C-12 | DDM-50S-NMC-77 |
| 311P409-2S-B-12 | DEMA15SNMBK47FO | 311-P-10-16S-C-15 | DCM13W6SNMC76 | 311-P-10-5S-C-15 | DDM-50S-NMC-76 |
| 311P409-2S-B-15 | DEMAK15SNMBK47FO | 311-P-10-17P-B-12 | DCM17W5PNMB77 | 311-P-10-6P-B-12 | DEM-5W1P-NMB-77 |
| 311P409-3P-B-12 | DEMA25PNMBK47FO | 311-P-10-17P-B-15 | DCM-17W5P-NMB-76 | 311-P-10-6P-B-15 | DEM-5W1P-NMB-76 |
| 311P409-3P-B-15 | DEMAK25PNMBK47FO | 311-P-10-17P-C-12 | DCM-17W5P-NMC-77 | 311-P-10-6P-C-15 | DEM-5W1P-NMC-76 |
| 311P409-3S-B-12 | DEMA25SNMBK47FO | 311-P-10-17P-C-15 | DCM-17W5P-NMC-76 | 311-P-10-6S-B-12 | DEM-5W1S-NMB-77 |
| 311P409-3S-B-15 | DEMAK25SNMBK47FO | 311-P-10-17S-B-12 | DCM-17W5S-NMB-77 | 311-P-10-6P-C-15 | DEM-5W1S-NMC-76 |
| 311P409-4P-B-12 | DEMA37PNMBK47FO | 311-P-10-17S-B-15 | DCM17W5S-NMB-76 | 311-P-10-7P-B-12 | DAM3W3PNMC76 |
| 311P409-4P-B-15 | DEMAK37PNMBK47FO | 311-P-10-17S-C-12 | DCM-17W5S-NMC-77 | 311-P-10-7P-B-15 | DAM-3W3P-NMB-76 |
| 311P409-4S-B-12 | DEMA37SNMBK47FO | 311-P-10-17S-C-15 | DCM-17W5S-NMC-76 | 311-P-10-7P-C-12 | DAM3W3P-NMC-77 |
| 311P409-4S-B-15 | DEMAK37SNMBK47FO | 311-P-10-18P-B-12 | DCM-21WA4P-NMB-77 | 311-P-10-7P-C-15 | DAM-3W3P-NMC-76 |
| 311P409-5P-B-12 | DEMA50PNMBK47FO | 311-P-10-18P-B-12 | DCM21WA4P-NMB-76 | 311-P-10-7S-B-12 | DAM3W3SNMB77 |
| 311P409-5S-B-15 | DEMAK50PNMBK47FO | 311-P-10-18P-C-15 | DCM-21WA4P-NMC-76 | 311-P-10-7S-B-15 | DAM3W3SNMB76 |
| 311P409-5S-B-12 | DEMA50SNMBK47FO | 311-P-10-18S-B-12 | DCM-21WA4S-NMB-77 | 311-P-10-7S-C-12 | DAM3W3S-NMC-76 |
| 311P409-5S-B-15 | DEMAK50PNMBK47FO | 311-P-10-18S-B-15 | DCM21WA4S-NMB-76 | 311-P-10-7S-C-15 | DAM-3W3S-NMC-76 |
| S-311-P-4/10G1OP1 | 330-5291-081-02 | 311-P-10-19P-B-12 | DCM-21W4P-NMB-77 | 311-P-10-8P-B-12 | DAM-7W2P-NMB-77 |
| S-311-P-4/10G1OS1 | 031-1007-052-05 | 311-P-10-19S-B-12 | DCM-21W4S-NMB-77 | 311-P-10-8P-B-15 | DAM-7W2P-NMB-76 |
| 311-P-10-B-1S-B-15 | DEMB9S-NMB-76 | 311-P-10-19S-C-15 | DCM21W4S-NMC-76 | 311-P-10-8P-C-15 | DAM-7W2P-NMC-76 |
| 311-P-10-B-4S-B-15 | DCMB37S-NMB-76 | 311-P-10-2P-B-12 | DAM15PNMB77 | 311-P-10-8S-B-12 | DAM-7W2S-NMB-77 |
| 311-P-10-1P-B-12 | DEMPPNMB77 | 311-P-10-2P-B-15 | DAM15PNMB76 | 311-P-10-8P-C-12 | DAM7W2S-NMC-77 |
| 311-P-10-1P-B-15 | DEM-9P-NMB-76 | 311-P-10-2P-C-12 | DAM15PNMC77 | 311-P-10-8P-C-15 | DAM-7W2S-NMC-76 |
| 311-P-10-1P-C-12 | DEM9PNMC77 | 311-P-10-2P-C-15 | DAM15PNMC76 | 311-P-10-9P-B-12 | DAM-11W1P-NMB-77 |
| 311-P-10-1P-C-15 | DEM9PNMC76 | 311-P-10-2S-B-12 | DAM15SNMB77 | 311-P-10-9P-B-15 | DAM-11W1P-NMB-76 |
| 311-P-10-1S-B-12 | DEM9SNMB77 | 311-P-10-2S-B-15 | DAM-15S-NMB-76 | 311-P-10-9P-C-12 | DAM-11W1P-NMC-77 |
| 311-P-10-1S-B-15 | DEM-9S-NMB-76 | 311-P-10-2S-C-15 | DAM-15S-NMC-76 | 311-P-10-9P-C-15 | DAM-11W1P-NMC-76 |
| 311-P-10-1S-C-12 | DEM-9S-NMC-77 | 311-P-10-2S-C-15 | DAM-15S-NMC-76 | 311-P-10-9S-B-12 | DAM-11W1S-NMB-77 |
| 311-P-10-1S-C-15 | DEM9SNMC76 | 311-P-10-20P-B-12 | DCM-25W3P-NMB-77 | 311-P-10-9S-B-15 | DAM-11W1S-NMB-76 |
| 311-P-10-10P-B-12 | DBM5W5PNMB77 | 311-P-10-20P-C-15 | DCM25W3P-NMB-76 | 311-P-10-9S-C-12 | DAM-11W1S-NMC-77 |
| 311-P-10-10P-B-15 | DBM-5W5P-NMB-76 | 311-P-10-20S-B-12 | DCM-25W36-NMB-77 | 311-P-10-9S-C-15 | DAM-11W1S-NMC-76 |
| 311-P-10-10P-C-12 | DBM-5W5P-NMC-77 | 311-P-10-20S-C-12 | DCM-25W3S-NMC-77 | 311-P-10B-1S-B-12 | DEMB9SNMB77 |
| 311-P-10-10P-C-15 | DBM-5W5P-NMC-76 | 311-P-10-20S-C-15 | DCM-25W3S-NMC-76 | 311-P-10B-1S-C-12 | DEMB-9S-NMC-77 |
| 311-P-10-10S-B-12 | DBM-5W5S-NMB-77 | 311-P-10-21P-C-15 | DCM27W2P-NMC-76 | 311-P-10B-1S-C-15 | DEMB9S-NMC-76 |
| 311-P-10-10S-B-15 | DBM-5W5S-NMB-76 | 311-P-10-21S-C-15 | DCM-27W2S-NMC-76 | 311-P-10B-13S-B-15 | DBMB-17W2S-NMB-76 |
| 311-P-10-10S-C-12 | DBM-5W5S-NMC-77 | 311-P-10-22P-B-12 | DDM-24W7P-NMB-77 | 311-P-10B-17S-B-15 | DCMB-17W5S-NMB-76 |
| 311-P-10-10S-C-15 | DBM-5W5S-NMC-76 | 311-P-10-22P-B-15 | DDM24W7PNMB76 | 311-P-10B-2S-B-12 | DAMB15SNMB77 |
| 311-P-10-11P-B-12 | DBM-9W4P-NMB-77 | 311-P-10-22P-C-15 | DDM-24W7P-NMC-76 | 311-P-10B-2S-C-12 | DAMB-15S-NMC-77 |
| 311-P-10-11P-C-15 | DBM-9W4P-NMC-76 | 311-P-10-22S-B-12 | DDM24W7SNMB77 | 311-P-10B-2S-C-15 | DAMB15SNMC76 |
| 311-P-10-11S-B-12 | DBM-9W4S-NMB-77 | 311-P-10-22S-B-15 | DDM-24W7S-NMB-76 | 311-P-10B-22S-B-15 | DDMB-247S-NMB-76 |
| 311-P-10-11S-C-15 | DBM-9W4S-NMC-76 | 311-P-10-22S-C-15 | DDM-24W7S-NMC-76 | 311-P-10B-3S-B-12 | DBMB-25S-NMB-77 |
| 311-P-10-12P-B-12 | DBM13W3P-NMB-77 | 311-P-10-23P-B-12 | DDM-36W4P-NMB-77 | 311-P-10B-3S-B-15 | DBMB-25S-NMB-76 |
| 311-P-10-12P-B-15 | DBM-13W3P-NMB-76 | 311-P-10-23S-B-12 | DDM-36W4S-NMB-77 | 311-P-10B-3S-C-12 | DBMB-25S-NMC-77 |
| 311-P-10-12P-C-15 | DBM-13W3P-NMC-76 | 311-P-10-23S-B-15 | DDM36W4SNMB76 | 311-P-10B-3S-C-15 | DBMB25SNMC76 |
| 311-P-10-12S-B-12 | DBM-13W3S-NMB-77 | 311-P-10-23S-C-15 | DDM-36W4S-NMC-76 | 311-P-10B-4S-B-12 | DCMB-37S-NMB-77 |

## NASA/GSFC Cross Reference

| NASA/GSFC Part Number | ITT Cannon Part Number | NASA/GSFC Part Number | ITT Cannon Part Number | NASA/GSFC Part Number | ITT Cannon Part Number |
|---|---|---|---|---|---|
| 311-P-10B-4S-C-12 | DCMB-37S-NMC-77 | 311-P-10B-5S-C-12 | DDMB-50S-NMC-77 | 311-P-10B-8S-B-15 | DAMB-7W2S-NMB-76 |
| 311-P-10B-4S-C-15 | DCMB37S-NMC-76 | 311-P-10B-5S-C-15 | DDMB50S-NMC-76 | 311-P-10B-9S-B-12 | DAMB-11W1S-NMB-77 |
| 311-P-10B-5S-B-12 | DDMB-50S-NMB-77 | 311-P-10B-6S-B-15 | DEMB-5W1S-NMB-76 | | |
| 311-P-10B-5S-B-15 | DDMB50S-NMB-76 | 311-P-10B-8S-B-12 | DAMB-7W2S-NMB-77 | | |

## ESA/SCC Cross Reference

| ESA–SCC Part Number | ITT Cannon Part Number | ESA–SCC Part Number | ITT Cannon Part Number | ESA–SCC Part Number | ITT Cannon Part Number |
|---|---|---|---|---|---|
| 340100101B DEM5W1SNMB | DEM5W1SNMBK52 | 340100101B DBM17W2POL3NMB | DBM17W2POL3NMBK52 | 340100101B DAM7W2P1A7NNMB | DAM7W2P1A7NNMBK52 |
| 340100101B DAM3W3SNMB | DAM3W3SNMBK52 | 340100101B DBM21W1POL3NMB | DBM21W1POL3NMBK52 | 340100101B DAM11W1P1A7NNMB | DAM11W1P1A7NNMBK52 |
| 340100101B DAM7W2SNMB | DAM7W2SNMBK52 | 340100101B DCM13W6POL3NMB | DCM13W6POL3NMBK52 | 340100101B DBM9W4P1A7NNMB | DBM9W4P1A7NNMBK52 |
| 340100101B DAM11W1SNMB | DAM11W1SNMBK52 | 340100101B DCM17W5POL3NMB | DCM17W5POL3NMBK52 | 340100101B DBM13W3P1A7NNMB | DBM13W3P1A7NNMBK52 |
| 340100101B DBM5W5SNMB | DBM5W5SNMBK52 | 340100101B DCM21WA4POL3NMB | DCM21WA4POL3NMBK52 | 340100101B DBM17W2P1A7NNMB | DBM17W2P1A7NNMBK52 |
| 340100101B DBM9W4SNMB | DBM9W4SNMBK52 | 340100101B DCM25W3POL3NMB | DCM25W3POL3NMBK52 | 340100101B DBM21W1P1A7NNMB | DBM21W1P1A7NNMBK52 |
| 340100101B DBM13W3SNMB | DBM13W3SNMBK52 | 340100101B DCM27W2POL3NMB | DCM27W2POL3NMBK52 | 340100101B DCM13W6P1A7NNMB | DCM13W6P1A7NNMBK52 |
| 340100101B DBM17W2SNMB | DBM17W2SNMBK52 | 340100101B DDM24W7POL3NMB | DDM24W7POL3NMBK52 | 340100101B DCM17W5P1A7NNMB | DCM17W5P1A7NNMBK52 |
| 340100101B DBM21W1SNMB | DBM21W1SNMBK52 | 340100101B DDM36W4POL3NMB | DDM36W4POL3NMBK52 | 340100101B DCM21WA4P1A7NNMB | DCM21WA4P1A7NNMBK52 |
| 340100101B DCM8W8SNMB | DCM8W8SNMBK52 | 340100101B DDM43W2POL3NMB | DDM43W2POL3NMBK52 | 340100101B DCM25W3P1A7NNMB | DCM25W3P1A7NNMBK52 |
| 340100101B DCM13W6SNMB | DCM13W6SNMBK52 | 340100101B DDM47W1POL3NMB | DDM47W1POL3NMBK52 | 340100101B DCM27W2P1A7NNMB | DCM27W2P1A7NNMBK52 |
| 340100101B DCM17W5SNMB | DCM17W5SNMBK52 | 340100101B DEM5W1S1A0NNMB | DEM5W1S1A0NNMBK52 | 340100101B DDM24W7P1A7NNMB | DDM24W7P1A7NNMBK52 |
| 340100101B DCM21WA4SNMB | DCM21WA4SNMBK52 | 340100101B DAM7W2S1A0NNMB | DAM7W2S1A0NNMBK52 | 340100101B DDM36W4P1A7NNMB | DDM36W4P1A7NNMBK52 |
| 340100101B DCM25W3SNMB | DCM25W3SNMBK52 | 340100101B DAM11W1S1A0NNMB | DAM11W1S1A0NNMBK52 | 340100101B DDM43W2P1A7NNMB | DDM43W2P1A7NNMBK52 |
| 340100101B DCM27W2SNMB | DCM27W2SNMBK52 | 340100101B DBM9W4S1A0NNMB | DBM9W4S1A0NNMBK52 | 340100101B DDM47W1P1A7NNMB | DDM47W1P1A7NNMBK52 |
| 340100101B DDM24W7SNMB | DDM24W7SNMBK52 | 340100101B DBM13W3S1A0NNMB | DBM13W3S1A0NNMBK52 | 340100101B DEM5W1S1A9NNMB | DEM5W1S1A9NNMBK52 |
| 340100101B DDM36W4SNMB | DDM36W4SNMBK52 | 340100101B DBM17W2S1A0NNMB | DBM17W2S1A0NNMBK52 | 340100101B DAM7W2S1A9NNMB | DAM7W2S1A9NNMBK52 |
| 340100101B DDM43W2SNMB | DDM43W2SNMBK52 | 340100101B DBM21W1S1A0NNMB | DBM21W1S1A0NNMBK52 | 340100101B DAM11W1S1A9NNMB | DAM11W1S1A9NNMBK52 |
| 340100101B DDM47W1SNMB | DDM47W1SNMBK52 | 340100101B DCM13W6S1A0NNMB | DCM13W6S1A0NNMBK52 | 340100101B DBM9W4S1A9NNMB | DBM9W4S1A9NNMBK52 |
| 340100101B DEM5W1PNMB | DEM5W1PNMBK52 | 340100101B DCM17W5S1A0NNMB | DCM17W5S1A0NNMBK52 | 340100101B DBM13W3S1A9NNMB | DBM13W3S1A9NNMBK52 |
| 340100101B DAM3W3PNMB | DAM3W3PNMBK52 | 340100101B DCM21WA4S1A0NNMB | DCM21WA4S1A0NNMBK52 | 340100101B DBM17W2S1A9NNMB | DBM17W2S1A9NNMBK52 |
| 340100101B DAM7W2PNMB | DAM7W2PNMBK52 | 340100101B DCM25W3S1A0NNMB | DCM25W3S1A0NNMBK52 | 340100101B DBM21W1S1A9NNMB | DBM21W1S1A9NNMBK52 |
| 340100101B DAM11W1PNMB | DAM11W1PNMBK52 | 340100101B DCM27W2S1A0NNMB | DCM27W2S1A0NNMBK52 | 340100101B DCM13W6S1A9NNMB | DCM13W6S1A9NNMBK52 |
| 340100101B DBM5W5PNMB | DBM5W5PNMBK52 | 340100101B DDM24W7S1A0NNMB | DDM24W7S1A0NNMBK52 | 340100101B DCM17W5S1A9NNMB | DCM17W5S1A9NNMBK52 |
| 340100101B DBM9W4PNMB | DBM9W4PNMBK52 | 340100101B DDM36W4S1A0NNMB | DDM36W4S1A0NNMBK52 | 340100101B DCM21WA4S1A9NNMB | DCM21WA4S1A9NNMBK52 |
| 340100101B DBM13W3PNMB | DBM13W3PNMBK52 | 340100101B DDM43W2S1A0NNMB | DDM43W2S1A0NNMBK52 | 340100101B DCM25W3S1A9NNMB | DCM25W3S1A9NNMBK52 |
| 340100101B DBM17W2PNMB | DBM17W2PNMBK52 | 340100101B DDM47W1S1A0NNMB | DDM47W1S1A0NNMBK52 | 340100101B DCM27W2S1A9NNMB | DCM27W2S1A9NNMBK52 |
| 340100101B DBM21W1PNMB | DBM21W1PNMBK52 | 340100101B DEM5W1P1A0NNMB | DEM5W1P1A0NNMBK52 | 340100101B DDM24W7S1A9NNMB | DDM24W7S1A9NNMBK52 |
| 340100101B DCM8W8PNMB | DCM8W8PNMBK52 | 340100101B DAM7W2P1A0NNMB | DAM7W2P1A0NNMBK52 | 340100101B DDM36W4S1A9NNMB | DDM36W4S1A9NNMBK52 |
| 340100101B DCM13W6PNMB | DCM13W6PNMBK52 | 340100101B DAM11W1P1A0NNMB | DAM11W1P1A0NNMBK52 | 340100101B DDM43W2S1A9NNMB | DDM43W2S1A9NNMBK52 |
| 340100101B DCM17W5PNMB | DCM17W5PNMBK52 | 340100101B DBM9W4P1A0NNMB | DBM9W4P1A0NNMBK52 | 340100101B DDM47W1S1A9NNMB | DDM47W1S1A9NNMBK52 |
| 340100101B DCM21WA4PNMB | DCM21WA4PNMBK52 | 340100101B DBM13W3P1A0NNMB | DBM13W3P1A0NNMBK52 | 340100101B DEM5W1P1A9NNMB | DEM5W1P1A9NNMBK52 |
| 340100101B DCM25W3PNMB | DCM25W3PNMBK52 | 340100101B DBM17W2P1A0NNMB | DBM17W2P1A0NNMBK52 | 340100101B DAM7W2P1A9NNMB | DAM7W2P1A9NNMBK52 |
| 340100101B DCM27W2PNMB | DCM27W2PNMBK52 | 340100101B DBM21W1P1A0NNMB | DBM21W1P1A0NNMBK52 | 340100101B DAM11W1P1A9NNMB | DAM11W1P1A9NNMBK52 |
| 340100101B DDM24W7PNMB | DDM24W7PNMBK52 | 340100101B DCM13W6P1A0NNMB | DCM13W6P1A0NNMBK52 | 340100101B DBM9W4P1A9NNMB | DBM9W4P1A9NNMBK52 |
| 340100101B DDM36W4PNMB | DDM36W4PNMBK52 | 340100101B DCM17W5P1A0NNMB | DCM17W5P1A0NNMBK52 | 340100101B DBM13W3P1A9NNMB | DBM13W3P1A9NNMBK52 |
| 340100101B DDM43W2PNMB | DDM43W2PNMBK52 | 340100101B DCM21WA4P1A0NNMB | DCM21WA4P1A0NNMBK52 | 340100101B DBM17W2P1A9NNMB | DBM17W2P1A9NNMBK52 |
| 340100101B DDM47W1PNMB | DDM47W1PNMBK52 | 340100101B DCM25W3P1A0NNMB | DCM25W3P1A0NNMBK52 | 340100101B DBM21W1P1A9NNMB | DBM21W1P1A9NNMBK52 |
| 340100101B DEM5W1SOL3NMB | DEM5W1SOL3NMBK52 | 340100101B DCM27W2P1A0NNMB | DCM27W2P1A0NNMBK52 | 340100101B DCM13W6P1A9NNMB | DCM13W6P1A9NNMBK52 |
| 340100101B DAM7W2SOL3NMB | DAM7W2SOL3NMBK52 | 340100101B DDM24W7P1A0NNMB | DDM24W7P1A0NNMBK52 | 340100101B DCM17W5P1A9NNMB | DCM17W5P1A9NNMBK52 |
| 340100101B DAM11W1SOL3NMB | DAM11W1SOL3NMBK52 | 340100101B DDM36W4P1A0NNMB | DDM36W4P1A0NNMBK52 | 340100101B DCM21WA4P1A9NNMB | DCM21WA4P1A9NNMBK52 |
| 340100101B DBM9W4SOL3NMB | DBM9W4SOL3NMBK52 | 340100101B DDM43W2P1A0NNMB | DDM43W2P1A0NNMBK52 | 340100101B DCM25W3P1A9NNMB | DCM25W3P1A9NNMBK52 |
| 340100101B DBM13W3SOL3NMB | DBM13W3SOL3NMBK52 | 340100101B DDM47W1P1A0NNMB | DDM47W1P1A0NNMBK52 | 340100101B DCM27W2P1A9NNMB | DCM27W2P1A9NNMBK52 |
| 340100101B DBM17W2SOL3NMB | DBM17W2SOL3NMBK52 | 340100101B DEM5W1S1A7NNMB | DEM5W1S1A7NNMBK52 | 340100101B DDM24W7P1A9NNMB | DDM24W7P1A9NNMBK52 |
| 340100101B DBM21W1SOL3NMB | DBM21W1SOL3NMBK52 | 340100101B DAM7W2S1A7NNMB | DAM7W2S1A7NNMBK52 | 340100101B DDM36W4P1A9NNMB | DDM36W4P1A9NNMBK52 |
| 340100101B DCM13W6SOL3NMB | DCM13W6SOL3NMBK52 | 340100101B DAM11W1S1A7NNMB | DAM11W1S1A7NNMBK52 | 340100101B DDM43W2P1A9NNMB | DDM43W2P1A9NNMBK52 |
| 340100101B DCM17W5SOL3NMB | DCM17W5SOL3NMBK52 | 340100101B DBM9W4S1A7NNMB | DBM9W4S1A7NNMBK52 | 340100101B DDM47W1P1A9NNMB | DDM47W1P1A9NNMBK52 |
| 340100101B DCM21WA4SOL3NMB | DCM21WA4SOL3NMBK52 | 340100101B DBM13W3S1A7NNMB | DBM13W3S1A7NNMBK52 | 340100101B DEM5W1SF179ANMB | DEM5W1SF179ANMBK52 |
| 340100101B DCM25W3SOL3NMB | DCM25W3SOL3NMBK52 | 340100101B DBM17W2S1A7NNMB | DBM17W2S1A7NNMBK52 | 340100101B DAM7W2SF179ANMB | DAM7W2SF179ANMBK52 |
| 340100101B DCM27W2OL3NMB | DCM27W2OL3NMBK52 | 340100101B DBM21W1S1A7NNMB | DBM21W1S1A7NNMBK52 | 340100101B DAM11W1SF179ANMB | DAM11W1SF179ANMBK52 |
| 340100101B DDM24W7SOL3NMB | DDM24W7SOL3NMBK52 | 340100101B DCM13W6S1A7NNMB | DCM13W6S1A7NNMBK52 | 340100101B DBM9W4SF179ANMB | DBM9W4SF179ANMBK52 |
| 340100101B DDM36W4SOL3NMB | DDM36W4SOL3NMBK52 | 340100101B DCM17W5S1A7NNMB | DCM17W5S1A7NNMBK52 | 340100101B DBM13W3SF179ANMB | DBM13W3SF179ANMBK52 |
| 340100101B DDM43W2SOL3NMB | DDM43W2SOL3NMBK52 | 340100101B DCM21WA4S1A7NNMB | DCM21WA4S1A7NNMBK52 | 340100101B DBM17W2SF179ANMB | DBM17W2SF179ANMBK52 |
| 340100101B DDM47W1SOL3NMB | DDM47W1SOL3NMBK52 | 340100101B DCM25W3S1A7NNMB | DCM25W3S1A7NNMBK52 | 340100101B DBM21W1SF179ANMB | DBM21W1SF179ANMBK52 |
| 340100101B DEM5W1POL3NMB | DEM5W1POL3NMBK52 | 340100101B DCM27W2S1A7NNMB | DCM27W2S1A7NNMBK52 | 340100101B DCM13W6SF179ANMB | DCM13W6SF179ANMBK52 |
| 340100101B DAM3W3POL3NMB | DAM3W3POL3NMBK52 | 340100101B DDM24W7S1A7NNMB | DDM24W7S1A7NNMBK52 | 340100101B DCM17W5SF179ANMB | DCM17W5SF179ANMBK52 |
| 340100101B DAM7W2POL3NMB | DAM7W2POL3NMBK52 | 340100101B DDM36W4S1A7NNMB | DDM36W4S1A7NNMBK52 | 340100101B DCM21WA4SF179ANMB | DCM21WA4SF179ANMBK52 |
| 340100101B DAM11W1POL3NMB | DAM11W1POL3NMBK52 | 340100101B DDM43W2S1A7NNMB | DDM43W2S1A7NNMBK52 | 340100101B DCM25W3SF179ANMB | DCM25W3SF179ANMBK52 |
| 340100101B DBM9W4POL3NMB | DBM9W4POL3NMBK52 | 340100101B DDM47W1S1A7NNMB | DDM47W1S1A7NNMBK52 | 340100101B DCM27W2SF179ANMB | DCM27W2SF179ANMBK52 |
| 340100101B DBM13W3POL3NMB | DBM13W3POL3NMBK52 | 340100101B DEM5W1P1A7NNMB | DEM5W1P1A7NNMBK52 | 340100101B DDM24W7SF179ANMB | DDM24W7SF179ANMBK52 |



Dimensions are shown in mm (inch)
Dimensions subject to change

## ESA/SCC Cross Reference

| ESA–SCC Part Number | ITT Cannon Part Number | ESA–SCC Part Number | ITT Cannon Part Number | ESA–SCC Part Number | ITT Cannon Part Number |
|---|---|---|---|---|---|
| 340100101B | DDM36W4SF179ANMB | 340100101B | DAM15S1A9NNMB | 340100415B | DM115740-13 |
| 340100101B | DDM43W2SF179ANMB | 340100101B | DBM25S1A9NNMB | 340100419B | DM115740-12 |
| 340100101B | DDM47W1SF179ANMB | 340100101B | DCM37S1A9NNMB | 340100412B | DM115742-15 |
| 340100101B | DEM5W1PF179ANMB | 340100101B | DDM50S1A9NNMB | 340100416B | DM115742-14 |
| 340100101B | DAM7W2PF179ANMB | 340100101B | DEM9P1A9NNMB | 340100420B | DM115742-13 |
| 340100101B | DAM11W1PF179ANMB | 340100101B | DAM15P1A9NNMB | 340100413B | DM115741-7 |
| 340100101B | DBM9W4PF179ANMB | 340100101B | DBM25P1A9NNMB | 340100417B | DM115741-8 |
| 340100101B | DBM13W3PF179ANMB | 340100101B | DCM37P1A9NNMB | 340100414B | DM115743-20 |
| 340100101B | DBM17W2PF179ANMB | 340100101B | DDM50P1A9NNMB | 340100418B | DM115743-22 |
| 340100101B | DBM21W1PF179ANMB | 340100101B | DEM9SF179ANMB | 340102207B | DE-59-20 |
| 340100101B | DCM13W6PF179ANMB | 340100101B | DAM15SF179ANMB | 340102208B | DE-60-20 |
| 340100101B | DCM17W5PF179ANMB | 340100101B | DBM25SF179ANMB | 340102209B | DA-59-20 |
| 340100101B | DCM21WA4PF179ANMB | 340100101B | DCM37SF179ANMB | 340102210B | DA-60-20 |
| 340100101B | DCM25W3PF179ANMB | 340100101B | DDM50SF179ANMB | 340102211B | DB-59-20 |
| 340100101B | DCM27W2PF179ANMB | 340100101B | DEM9PF179ANMB | 340102212B | DB-60-20 |
| 340100101B | DDM24W7PF179ANMB | 340100101B | DAM15PF179ANMB | 340102213B | DC-59-20 |
| 340100101B | DDM36W4PF179ANMB | 340100101B | DBM25PF179ANMB | 340102214B | DC-60-20 |
| 340100101B | DDM43W2PF179ANMB | 340100101B | DCM37PF179ANMB | 340102215B | DD-59-20 |
| 340100101B | DDM47W1PF179ANMB | 340100101B | DDM50PF179ANMB | 340102216B | DD-60-20 |
| 340100101B | DEM9SNMB | 340100102B | DEMA9SNMB | 340102201B | D20418-52 |
| 340100101B | DAM15SNMB | 340100102B | DAMA15SNMB | 340102206B | D115418-70 |
| 340100101B | DBM25SNMB | 340100102B | DBMA25SNMB | 340102258B | D20418-101 |
| 340100101B | DCM37SNMB | 340100102B | DCMA37SNMB | 340102202B | D20419-74 |
| 340100101B | DDM50SNMB | 340100102B | DDMA50SNMB | 340102203B | D20419-48 |
| 340100101B | DEM9PNMB | 340100102B | DEMA9PNMB | 340102204B | D20420-67 |
| 340100101B | DAM15PNMB | 340100102B | DAMA15PNMB | 340102205B | D20420-49 |
| 340100101B | DBM25PNMB | 340100102B | DBMA25PNMB | 340102244B | D20419-73 |
| 340100101B | DCM37PNMB | 340100102B | DCMA37PNMB | 340102245B | D20419-84 |
| 340100101B | DDM50PNMB | 340100102B | DDMA50PNMB | 340102246B | D20420-63 |
| 340100101B | DEM9SOL3NMB | 340102217B | DA19678-174 | 340102247B | D20420-88 |
| 340100101B | DAM15SOL3NMB | 340102218B | DB19678-175 | 340102225B | DA19678-167 |
| 340100101B | DBM25SOL3NMB | 340102219B | DC19678-173 | 340102226B | DB19678-168 |
| 340100101B | DCM37SOL3NMB | 340102220B | DD19678-176 | 340102227B | DC19678-138 |
| 340100101B | DDM50SOL3NMB | 340102221B | DA19678-157 | 340102228B | DD19678-161 |
| 340100101B | DEM9POL3NMB | 340102222B | DB19678-171 | 340102239B | DE19977-47 |
| 340100101B | DAM15POL3NMB | 340102223B | DC19678-162 | 340102240B | DA19977-40 |
| 340100101B | DBM25POL3NMB | 340102224B | DD19678-172 | 340102241B | DB19977-43 |
| 340100101B | DCM37POL3NMB | 340104001B | DM115224-1040A | 340102242B | DC19977-45 |
| 340100101B | DDM50POL3NMB | 340104003B | DM115224-1020A | 340102243B | DD19977-44 |
| 340100101B | DEM9S1A0NNMB | 340104005B | DM115224-1010A | 340102234B | DE24657-16 |
| 340100101B | DAM15S1A0NNMB | 340104002B | DM115224-2040A | 340102235B | DA24658-15 |
| 340100101B | DBM25S1A0NNMB | 340104004B | DM115224-2020A | 340102236B | DB24659-15 |
| 340100101B | DCM37S1A0NNMB | 340104006B | DM115224-2010A | 340102237B | DC24660-16 |
| 340100101B | DDM50S1A0NNMB | 340104007B | DM115224-3040A | 340102238B | DD24661-13 |
| 340100101B | DEM9P1A0NNMB | 340104008B | DM115224-4040A | 340102229B | DE115386-101A |
| 340100101B | DAM15P1A0NNMB | 340104009B | DM115224-3020A | 340102230B | DA115386-104A |
| 340100101B | DBM25P1A0NNMB | 340104010B | DM115224-4020A | 340102231B | DB115386-102A |
| 340100101B | DCM37P1A0NNMB | 340104011B | DM115224-3010A | 340102232B | DC115386-100A |
| 340100101B | DDM50P1A0NNMB | 340104012B | DM115224-4010A | 340102233B | DD115386-103A |
| 340100101B | DEM9S1A7NNMB | 340100401B | DM115740-5036 | 340100501B | 030-8882-002 |
| 340100101B | DAM15S1A7NNMB | 340100405B | DM115740-5046 | 340100502B | 031-8944-000 |
| 340100101B | DBM25S1A7NNMB | 340100409B | DM115740-5047 | 340100503B | 030-8848-020 |
| 340100101B | DCM37S1A7NNMB | 340100402B | DM115742-5028 | 340100504B | 031-8787-020 |
| 340100101B | DDM50S1A7NNMB | 340100406B | DM115742-5039 | 340100505B | 330-8782-001 |
| 340100101B | DEM9P1A7NNMB | 340100410B | DM115742-5075 | 340100506B | 031-8843-001 |
| 340100101B | DAM15P1A7NNMB | 340100403B | DM115741-5048 | 340100507B | 330-8944-000 |
| 340100101B | DBM25P1A7NNMB | 340100407B | DM115741-5032 | 340100508B | 031-8902-000 |
| 340100101B | DCM37P1A7NNMB | 340100404B | DM115743-5064 | | |
| 340100101B | DDM50P1A7NNMB | 340100408B | DM115743-5040 | | |
| 340100101B | DEM9S1A9NNMB | 340100411B | DM115740-19 | | |

## Selection Guide

| | | Locking Hardware | | | | | |
|---|---|---|---|---|---|---|---|
| Backshell | Style | Female Screw Lock see page 209 | Male Screw Lock see page 208 | Sliding Lock Retainer Assembly see page 210 | Slide Lock Post see page 211 | Spring Latch Plate see page 212 | Spring Latch see page 212 |
| EMI Shielded | Snap-Together Metalized Plastic Straight Exit see page 200 | — | — | — | — | — | — |
| EMI Shielded | Snap-Together Metalized Plastic 40° Exit see page 200 | — | — | — | — | — | — |
| EMI Shielded | Die Cast Zinc Metal see page 202 | — | ▲ | — | — | — | — |
| Metal | Deep Straight Clamp see page 203 | ● | ● | ● | ● | ● | ● |
| Metal | Round Cable Clamp see page 203 | ● | ● | ● | ● | ● | ● |
| Metal | Short Straight Clamp see page 204 | ● | ● | ● | ● | ● | ● |
| Metal | 90° Entry see page 204 | ● | ● | ● | ● | ● | ● |
| Plastic | Snap-Together Universal see page 205 | ● | ● | — | — | — | — |
| Plastic | One-Piece Snap-Together see page 205 | — | ▲ | — | — | — | — |
| Plastic | One-Piece Plastic Straight Exit see page 206 | — | — | ● | ● | ● | ● |
| Plastic | One-Piece Plastic 90° Exit see page 206 | — | — | ● | ● | ● | ● |
| Plastic | Dataphone see page 206 | — | ▲ | — | — | — | — |
| Plastic | Quick Disconnect for IDC Cable see page 207 | — | — | — | — | — | — |
| Plastic | Quick Disconnect for Round Cable — Straight and 90° Exit see page 207 | — | — | — | — | — | — |

▲ Supplied with backshell
● Optional, compatible locking hardware
— Not compatible



Dimensions are shown in mm (inch)
Dimensions subject to change

## Selection Guide

| Locking Hardware | | | | | | | |
|---|---|---|---|---|---|---|---|
| Locking Hook see page 207 | Locking Spring see page 207 | Jackscrew Assembly see page 213 | Jackpost Assembly see page 213 | Recessed Jackscrew see page 201 | Extended Jackscrew see page 201 | Thumbscrew see page 201 | Jackpost for In-Line Connections see page 201 |
| — | — | — | — | • | • | • | • |
| — | — | — | — | • | • | • | • |
| — | — | — | — | — | — | — | — |
| — | — | — | • | — | — | — | — |
| — | — | — | • | — | — | — | — |
| — | — | — | • | — | — | — | — |
| — | — | — | — | — | — | — | — |
| — | — | • | — | — | — | — | — |
| — | — | — | — | — | — | — | — |
| — | — | — | — | — | — | — | — |
| — | — | — | — | — | — | — | — |
| — | — | — | — | — | — | — | — |
| — | — | — | — | — | — | — | — |
| • | • | — | — | — | — | — | — |
| • | • | — | — | — | — | — | — |

## Snap-Together Metalized Plastic

Metalized plastic backshells reduce EMI/RFI emissions.
Metalized plastic provides a light weight solution.
Design includes integral strain relieving cable clamp.

Product Features
- Improves conformance to FCC DOC #20780 shielding requirements
- No crimp ferrule tooling needed
- Quick and simple assembly using snap-together design feature

Attenuation

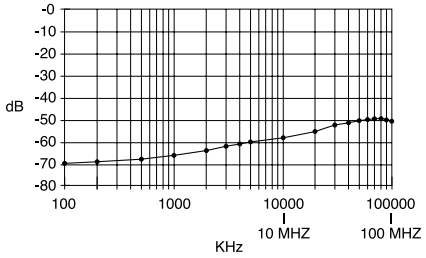


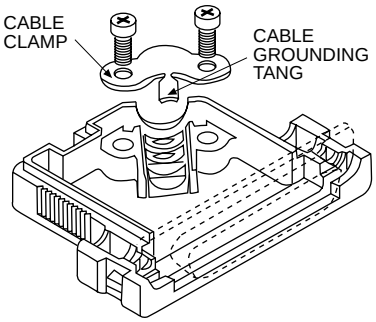


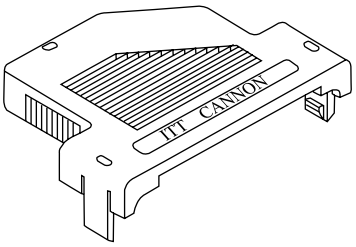


Note: Cable grounding tang not available on DE size backshell.

| Specifications | |
|---|---|
| Attenuation: | −49dB @ 100 MHz |
| Temperature Range: | −20° C to 80° C |

| Materials and Finishes | |
|---|---|
| Material: | Thermoplastic, UL 94V-0 rated |
| Finish: | Nickel over Copper |

### Straight Exit

Kit consists of 1 front shell, 1 rear shell, 1 cable clamp, 2 screws
Optional locking hardware sold separately, see page 201.

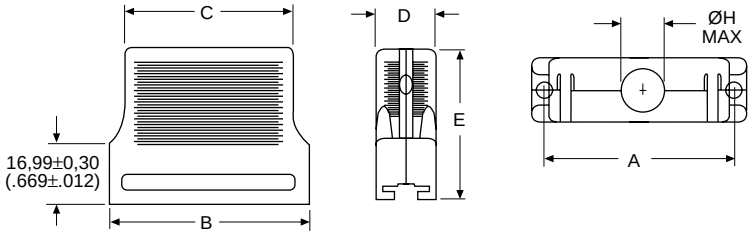


| Shell Size | Layout | Part Number | A ±0,15 (.006) | B ±0,30 (.012) | C ±0,30 (.012) | D ±0,30 (.120) | E ±0,20 (.008) | Ø H Max. |
|---|---|---|---|---|---|---|---|---|
| DE | 9 | DE121073-154 | 24,95 (.982) | 30,81 (1.213) | 23,70 (.933) | 16,00 (.630) | 35,99 (1.417) | 7,32 (.288) |
| DA | 15 | DA121073-150 | 33,30 (1.311) | 39,09 (1.539) | 31,80 (1.252) | 16,00 (.630) | 42,00 (1.654) | 8,31 (.327) |
| DB | 25 | DB121073-151 | 47,00 (1.850) | 53,01 (2.087) | 45,01 (1.772) | 16,00 (.630) | 42,00 (1.654) | 10,52 (.414) |
| DC | 37 | DC121073-152 | 63,45 (2.498) | 69,29 (2.728) | 60,30 (2.374) | 16,00 (.630) | 42,00 (1.654) | 12,32 (.485) |
| DD | 50 | DD121073-153 | 61,10 (2.410) | 66,90 (2.634) | 58,30 (2.295) | 19,00 (.748) | 42,00 (1.654) | 13,00 (.512) |

### 40° Exit

Kit consists of 1 front shell, 1 rear shell, 1 cable clamp, 2 screws
Optional locking hardware sold separately, see page 201.

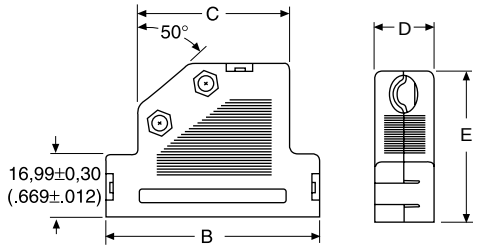


| Shell Size | Layout | Part Number | B ±0,30 (.012) | C ±0,30 (.012) | D ±0,30 (.012) | E ±0,20 (.008) | Cable Diameter Min. | Cable Diameter Max. |
|---|---|---|---|---|---|---|---|---|
| DE | 9 | DE121073-54 | 35,99 (1.417) | 22,00 (.866) | 16,00 (.630) | 35,99 (1.417) | 3,51 (.138) | 7,49 (.295) |
| DA | 15 | DA121073-50 | 44,29 (1.744) | 27,31 (1.075) | 16,00 (.630) | 42,01 (1.654) | 6,50 (.256) | 8,99 (.354) |
| DB | 25 | DB121073-51 | 57,99 (2.283) | 41,00 (1.614) | 16,00 (.630) | 42,01 (1.654) | 6,50 (.256) | 11,00 (.433) |
| DC | 37 | DC121073-52 | 74,50 (2.933) | 57,51 (2.264) | 16,00 (.630) | 42,01 (1.654) | 6,50 (.256) | 11,00 (.433) |
| DD | 50 | DD121073-53 | 72,97 (2.873) | 54,99 (2.165) | 19,00 (.748) | 42,01 (1.654) | 8,99 (.354) | 13,00 (.512) |



Dimensions are shown in mm (inch)
Dimensions subject to change

## Locking Hardware for Snap-Together EMI Shielded Backshell

### Recessed Jackscrew

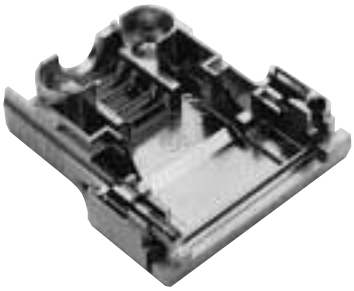

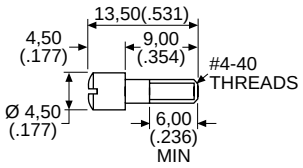


| | |
|---|---|
| Part Number: | 250-8501-004 |
| Material: | Brass |
| Finish: | Nickel |
| Quantity Required per Connector: | 2 |

### Extended Jackscrew

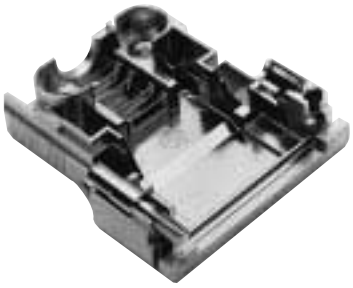

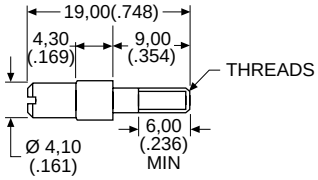


| | |
|---|---|
| Part Number: | 250-8501-009 (M3)<br>250-8501-010 (#4-40) |
| Material: | Brass |
| Finish: | Nickel |
| Quantity Required per Connector: | 2 |

### Thumbscrew

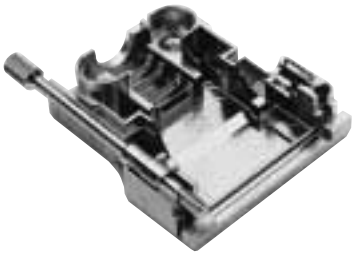

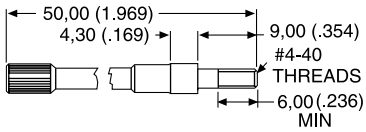


| | |
|---|---|
| Part Number: | 250-8501-013 |
| Material: | Brass |
| Finish: | Nickel |
| Quantity Required per Connector: | 2 |

## Jackpost for In-Line Connections

### Rectangular Nut

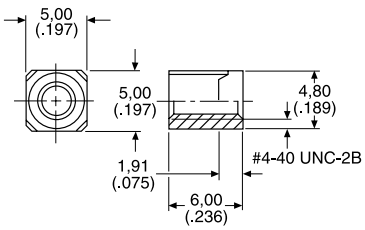


### Jackpost

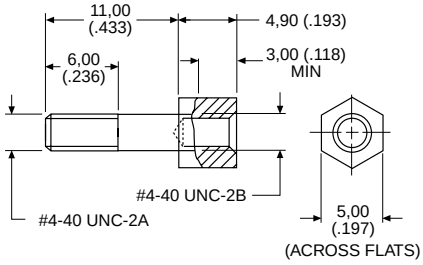


### Jackpost Assembly

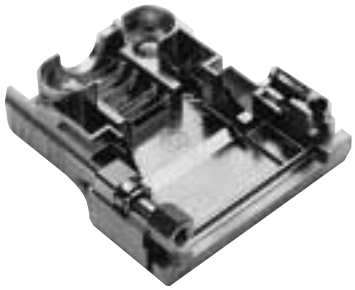

Assembly consists of 1 rectangular nut, 1 jackpost, 1 #4-40 lock washer.

| | |
|---|---|
| Part Number: | D121073-19 |
| Material: | Brass |
| Finish: | Nickel |
| Quantity Required per Connector: | 2 |

## Die Cast Zinc Metal Backshell

Straight Exit

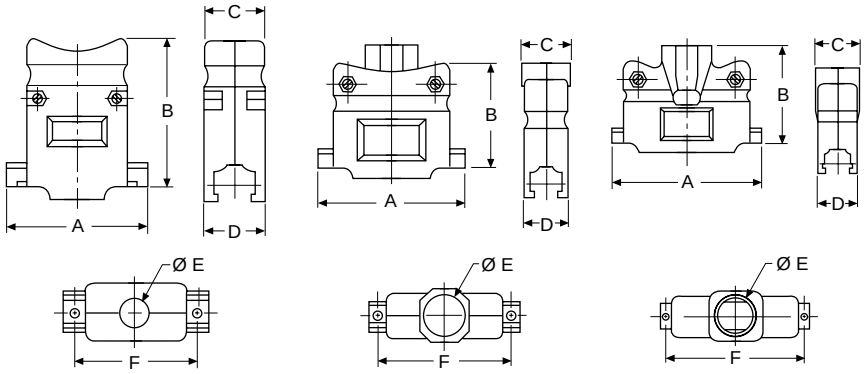


Die cast metal backshells reduce EMI/RFI emissions.
Die cast metal backshells offer improved shielding in a rugged package.

Product Features
- Improves conformance to FCC DOC #20780 shielding requirements
- No crimp ferrule tooling needed
- Kit consists of 1 front shell, 1 rear shell, 2 screws, 2 hex nuts, 2 mounting screws, 2 end brackets, 1 set of compression inserts (see this page)

| Shell Size | Layout | Part Number | A ±0,13 (.005) | B ±0,13 (.005) | C ±0,13 (.005) | D ±0,13 (.005) | Ø E ±0,13 (.005) | F ±0,13 (.005) |
|---|---|---|---|---|---|---|---|---|
| DE | 9 | 980-2000-345 | 31,12 (1.225) | 37,21 (1.465) | 15,75 (.620) | 15,75 (.620) | 10,16 (.400) | 24,99 (.984) |
| DA | 15 | 980-2000-346 | 39,12 (1.540) | 40,64 (1.600) | 15,75 (.620) | 15,75 (.620) | 10,16 (.400) | 33,32 (1.312) |
| DB | 25 | 980-2000-347 | 53,09 (2.090) | 39,37 (1.550) | 17,53 (.690) | 15,75 (.620) | 13,34 (.525) | 47,17 (1.857) |
| DC | 37 | 980-2000-348 | 69,34 (2.730) | 45,72 (1.800) | 21,95 (.864) | 15,75 (.620) | 18,44 (.726) | 63,50 (2.500) |
| DD | 50 | 980-2000-349 | 66,70 (2.626) | 45,72 (1.800) | 21,95 (.864) | 18,54 (.730) | 18,44 (.726) | 61,11 (2.406) |

Specifications

| | |
|---|---|
| Attenuation: | –50 dB @ 1000 MHz |
| Temperature Range: | –20° C to 80° C |

Materials and Finishes

| | |
|---|---|
| Backshell Material: | Zinc |
| Backshell Finish: | Clear Zinc |
| Compression Inserts: | PVC |
| Hardware Material: | Steel |
| Hardware Finish: | Clear Zinc |

Attenuation

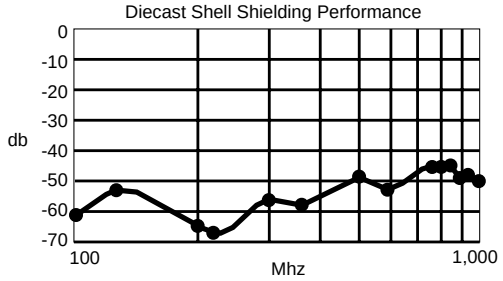


### Compression Inserts (Included With Die Cast Zinc Metal Backshell)

Compression inserts accommodate a wide variety of cable sizes.

| Position | Cable Diameter |
|---|---|
| 9, 15 | .190/.350 |
| 25 | .190/.460 |
| 37, 50 | .300/.680 |

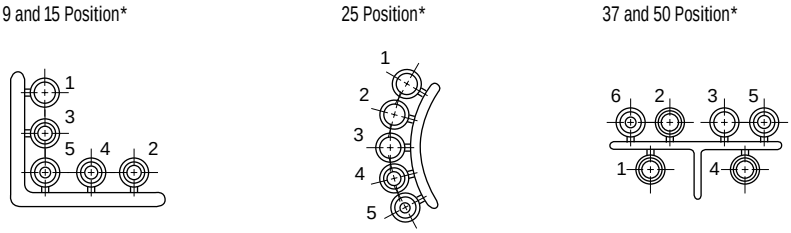


* Inserts may be supplied mirror image

| Position | #1 O.D. | #1 I.D. | #2 O.D. | #2 I.D. | #3 O.D. | #3 I.D. | #4 O.D. | #4 I.D. | #5 O.D. | #5 I.D. | #6 O.D. | #6 I.D. |
|---|---|---|---|---|---|---|---|---|---|---|---|---|
| 9, 15 | 12,07 (.475) | 8,13 (.320) | 9,14 (.360) | 8,00 (.315) | 9,14 (.360) | 6,48 (.255) | 9,14 (.360) | 7,24 (.285) | 9,14 (.360) | 5,33 (.210) | — | — |
| 25 | 15,24 (.600) | 11,43 (.450) | 11,43 (.450) | 10,41 (.410) | 11,43 (.450) | 9,40 (.370) | 11,43 (.450) | 7,62 (.300) | 11,43 (.450) | 5,84 (.230) | — | — |
| 37, 50 | 16,64 (.655) | 14,48 (.570) | 17,78 (.700) | 15,75 (.620) | 20,57 (.810) | 16,51 (.650) | 16,64 (.655) | 12,70 (.500) | 16,64 (.655) | 10,80 (.425) | 16,64 (.655) | 8,89 (.350) |



Dimensions are shown in mm (inch)
Dimensions subject to change

## Metal Backshell

Metal Backshells provide strain relief.
Various profiles available for different cable routing requirements.

Product Features
Qualified to MIL-Spec M85049

Materials and Finishes

| | |
|---|---|
| Backshell Material: | Low Carbon Steel |
| Finish: | Yellow Chromate over Cadmium |
| Hardware Material: | Steel |

### Deep Straight Clamp

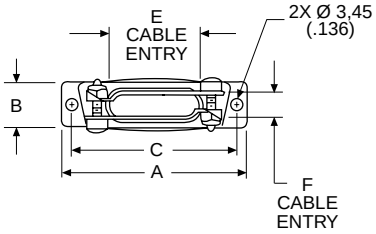


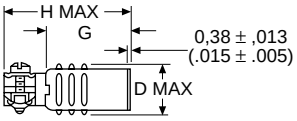


Kit consists of 1 shell, 2 cable clamps, 2 screws, 2 hex nuts

| Shell Size | Layout | Part Number | Mil Spec Part Number | A ±0,38 (.015) | B ±0,572 (.0225) | C ±0,13 (.005) | D max. | E ±0,38 (.015) | F ±0,38 (.015) | G ±0,38 (.015) | H max. |
|---|---|---|---|---|---|---|---|---|---|---|---|
| DE | 9 | DE24657 | M85049/48-1-1 | 30,56 (1.203) | 12,484 (.4915) | 24,99 (.984) | 14,68 (.578) | 9,53 (.375) | 9,53 (.375) | 19,05 (.750) | 31,75 (1.250) |
| DA | 15 | DA24658 | M85049/48-1-2 | 38,89 (1.531) | 12,484 (.4915) | 33,32 (1.312) | 14,68 (.578) | 18,11 (.713) | 7,93 (.312) | 19,05 (.750) | 31,75 (1.250) |
| DB | 25 | DB24659 | M85049/48-1-3 | 52,78 (2.078) | 12,484 (.4915) | 47,04 (1.852) | 14,68 (.578) | 25,40 (1.000) | 7,93 (.312) | 25,40 (1.000) | 39,70 (1.563) |
| DC | 37 | DC24660 | M85049/48-1-4 | 69,04 (2.718) | 12,484 (.4915) | 63,50 (2.500) | 14,68 (.578) | 34,93 (1.375) | 7,93 (.312) | 25,40 (1.000) | 39,70 (1.563) |
| DD | 50 | DD24661 | M85049/48-1-5 | 66,68 (2.625) | 15,253 (.6005) | 61,11 (2.406) | 17,45 (.687) | 35,71 (1.406) | 10,31 (.406) | 28,57 (1.125) | 42,88 (1.688) |

### Round Cable Clamp

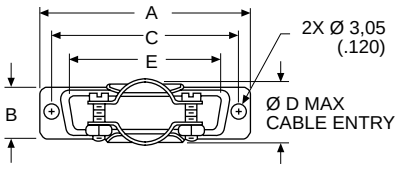


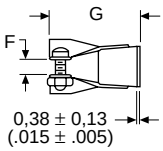


Kit consists of 1 shell, 2 screws, 2 hex nuts

| Shell Size | Layout | Part Number | Mil Spec Part Number | A ±0,38 (.015) | B ±0,38 (.015) | C ±0,13 (.005) | Ø D max. | E ±0,38 (.015) | F ±0,38 (.015) | G ±0,76 (.030) |
|---|---|---|---|---|---|---|---|---|---|---|
| DE | 9 | DE44994 | M85049/48-2-1 | 30,68 (1.208) | 12,70 (.500) | 24,99 (.984) | 10,31 (.406) | 16,79 (.661) | 3,18 (.125) | 26,18 (1.031) |
| DA | 15 | DA20961 | M85049/48-2-2 | 38,89 (1.531) | 12,70 (.500) | 33,33 (1.312) | 10,31 (.406) | 24,99 (.984) | 3,18 (.125) | 26,18 (1.031) |
| DB | 25 | DB20962 | M85049/48-2-3 | 52,78 (2.078) | 12,70 (.500) | 47,04 (1.852) | 15,06 (.593) | 38,48 (1.515) | 4,75 (.187) | 26,98 (1.062) |
| DC | 37 | DC20963 | M85049/48-2-4 | 69,04 (2.718) | 12,70 (.500) | 63,50 (2.500) | 18,23 (.718) | 55,14 (2.171) | 6,35 (.250) | 26,98 (1.062) |
| DD | 50 | DD20964 | M85049/48-2-5 | 66,68 (2.625) | 15,47 (.609) | 61,11 (2.406) | 20,62 (.812) | 53,16 (2.093) | 7,92 (.312) | 26,98 (1.062) |

## Short Straight Clamp

Kit consists of 1 shell, 2 or 3 screws, 2 or 3 hex nuts

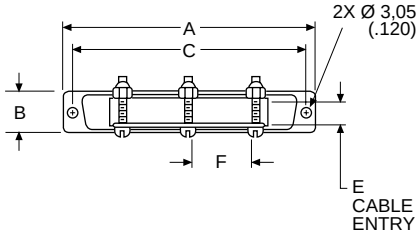


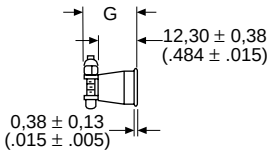


| Shell Size | Layout | Part Number | Mil Spec Part Number | No. of Cable Locking Screws Included | A ±0,38 (.015) | B ±0,38 (.015) | C ±0,13 (.005) | E ±0,38 (.015) | F ±0,38 (.015) | G ±0,89 (.035) |
|---|---|---|---|---|---|---|---|---|---|---|
| DA | 15 | DA19678-1 | M85049/48-3-2 | 2 | 38,88 (1.531) | 12,70 (.500) | 33,33 (1.312) | 7,51 (.296) | 7,93 (.312) | 16,36 (.644) |
| DB | 25 | DB19678-2 | M85049/48-3-3 | 2 | 52,78 (2.078) | 12,70 (.500) | 47,04 (1.852) | 7,51 (.296) | 20,22 (.796) | 16,36 (.644) |
| DC | 37 | DC19678-3 | M85049/48-3-4 | 3 | 69,04 (2.718) | 12,70 (.500) | 63,50 (2.500) | 7,51 (.296) | 17,45 (.687) | 16,36 (.644) |
| DD | 50 | DD19678-4 | M85049/48-3-5 | 3 | 66,68 (2.625) | 15,47 (.609) | 61,11 (2.406) | 9,91 (.390) | 17,45 (.687) | 17,63 (.694) |

DE-9 is not available.

## 90° Entry

Kit consists of 1 shell, 1 cable clamp, 1 screw, 1 nut, 2 rivnuts (assembled)

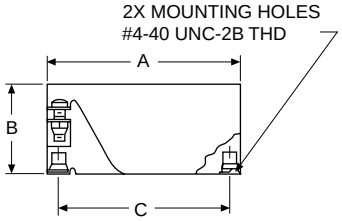


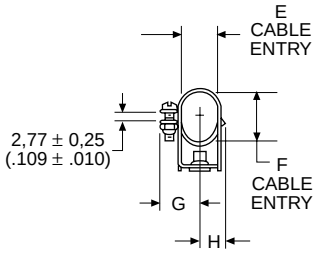


| Shell Size | Layout | Part Number | Mil Spec Part Number | A ±0,38 (.015) | B ±0,76 (.030) | C ±0,13 (.005) | E ±0,76 (.030) | F ±0,76 (.030) | G ±0,76 (.030) | H ±0,76 (.030) |
|---|---|---|---|---|---|---|---|---|---|---|
| DE | 9 | DE19977-5 | M85049/50-1 | 30,56 (1.203) | 18,24 (.718) | 24,99 (.984) | 11,10 (.437) | 11,10 (.437) | 11,89 (.468) | 7,14 (.281) |
| DA | 15 | DA19977-1 | M85049/50-2 | 38,89 (1.531) | 18,24 (.718) | 33,33 (1.312) | 11,10 (.437) | 11,10 (.437) | 11,89 (.468) | 7,14 (.281) |
| DB | 25 | DB19977-2 | M85049/50-3 | 52,78 (2.078) | 24,58 (.968) | 47,04 (1.852) | 11,10 (.437) | 15,88 (.625) | 11,89 (.468) | 7,14 (.281) |
| DC | 37 | DC19977-3 | M85049/50-4 | 69,04 (2.718) | 30,15 (1.187) | 63,50 (2.500) | 11,10 (.437) | 20,63 (.812) | 11,89 (.468) | 7,14 (.281) |
| DD | 50 | DD19977-4 | M85049/50-5 | 66,68 (2.625) | 31,75 (1.250) | 61,11 (2.406) | 14,28 (.562) | 23,01 (.906) | 13,49 (.531) | 8,71 (.343) |



Dimensions are shown in mm (inch)
Dimensions subject to change

## Plastic Backshell

### Snap-Together Universal

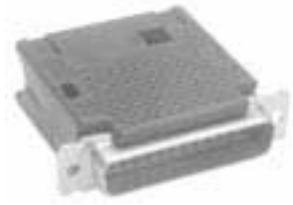

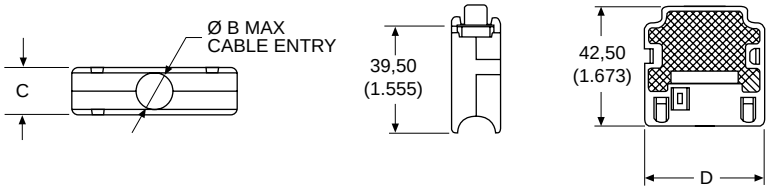


A 2-piece snap-together design for quick assembly
Customer furnishes tie-wrap

#### Materials and Finishes

| | |
|---|---|
| Material: | Black Thermoplastic, UL 94V-0 rated |

| Shell Size | Layout | Part Number | Ø B max. | C ±0,20 (.008) | D ±0,20 (.008) |
|---|---|---|---|---|---|
| DE | 9 | DE115339-20 | 7,01 (.276) | 17,00 (.669) | 19,51 (.768) |
| DA | 15 | DA115339-21 | 9,60 (.378) | 17,00 (.669) | 27,79 (1.094) |
| DB | 25 | DB115339-22 | 11,61 (.457) | 17,00 (.669) | 41,61 (1.638) |
| DC | 37 | DC115339-23 | 13,00 (.512) | 17,00 (.669) | 57,99 (2.283) |
| DD | 50 | DD115339-24 | 16,00 (.630) | 19,81 (.780) | 52,32 (2.060) |

### One-Piece Snap-Together

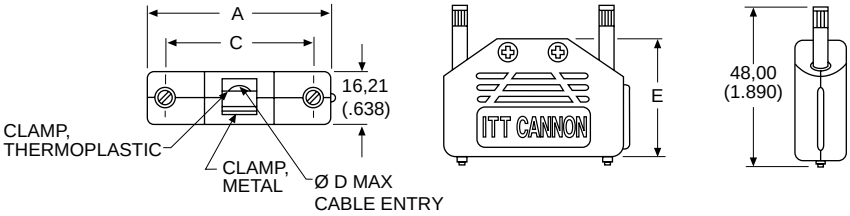


Low cost
Easy to assemble
Mounting hardware included
2 thumbscrews, 2 cable clamps

#### Materials and Finishes

| | |
|---|---|
| Backshell Material: | Polypropylene |
| Hardware Material: | Steel |
| Hardware Finish: | Yellow chromate over zinc |

| Shell Size | Layout | Part Number | A | C | Ø D max. | E |
|---|---|---|---|---|---|---|
| DE | 9 | DEBS-9 | 35,20 (1.386) | 24,99 (.984) | 5,69 (.224) | 27,51 (1.083) |
| DA | 15 | DABS-15 | 43,31 (1.705) | 33,33 (1.312) | 5,69 (.224) | 31,19 (1.228) |
| DB | 25 | DBBS-25 | 57,20 (2.252) | 47,04 (1.852) | 6,50 (.256) | 38,30 (1.508) |

DC-37 and DD-50 are not available.

## One-Piece Plastic

Straight Exit

Kit consists of 1 shell, 1 cable clamp,
1 set screw
Mounting hardware included
2 screws #4-24 x 5/16 long self-tapping
Accommodates spring latches

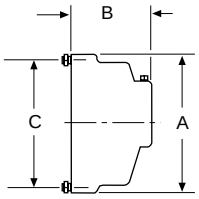


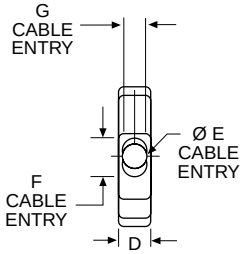


Materials and Finishes

| | |
|---|---|
| Backshell Material: | Black Thermoplastic, UL 94V-2 rated |
| Hardware Material: | Steel |
| Hardware Finish: | Yellow Chromate over Cadmium or Zinc |

| Shell Size | Layout | Part Number | A ±0,38 (.015) | B ±0,38 (.015) | C ±0,13 (.005) | D ±0,38 (.015) | Ø E ±0,25 (.010) | F ±0,25 (.010) | G ±0,25 (.010) |
|---|---|---|---|---|---|---|---|---|---|
| DE | 9 | DE51218 | 30,94 (1.218) | 25,40 (1.000) | 24,99 (.984) | 12,70 (.500) | 7,14 (.281) | — | — |
| DA | 15 | DA51210 | 39,27 (1.546) | 25,40 (1.000) | 33,33 (1.312) | 12,70 (.500) | 9,14 (.360) | — | — |
| DB | 25 | DB51212 | 53,16 (2.093) | 31,75 (1.250) | 47,04 (1.852) | 12,70 (.500) | — | 12,52 (.493) | 9,15 (.360) |
| DC | 37 | DC51214 | 69,44 (2.734) | 38,10 (1.500) | 63,50 (2.500) | 12,70 (.500) | — | 17,63 (.694) | 9,15 (.360) |
| DD | 50 | DD51216 | 67,06 (2.640) | 38,10 (1.500) | 61,11 (2.406) | 15,47 (.609) | — | 18,64 (.734) | 11,89 (.468) |

90° Exit

Kit consists of 1 shell, 1 cable clamp,
1 set screw
Mounting hardware included
2 screws #4-24 x 5/16 long self-tapping

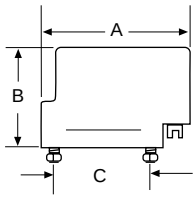


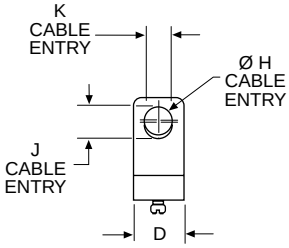


Materials and Finishes

| | |
|---|---|
| Backshell Material: | Black Thermoplastic, UL 94V-2 rated |
| Hardware Material: | Steel |
| Hardware Finish: | Yellow Chromate over Cadmium or Zinc |

| Shell Size | Layout | Part Number | A ±0,38 (.015) | B ±0,38 (.015) | C ±0,13 (.005) | D ±0,38 (.015) | Ø H ±0,25 (.010) | J ±0,25 (.010) | K ±0,25 (.010) |
|---|---|---|---|---|---|---|---|---|---|
| DE | 9 | DE51219 | 37,95 (1.494) | 25,40 (1.000) | 24,99 (.984) | 12,70 (.500) | 7,14 (.281) | — | — |
| DA | 15 | DA51211 | 46,28 (1.822) | 25,40 (1.000) | 33,33 (1.312) | 12,70 (.500) | 9,14 (.360) | — | — |
| DB | 25 | DB51213 | 60,15 (2.368) | 31,75 (1.250) | 47,04 (1.852) | 12,70 (.500) | — | 12,52 (.493) | 9,15 (.360) |
| DC | 37 | DC51215 | 76,43 (3.009) | 38,10 (1.500) | 63,50 (2.500) | 12,70 (.500) | — | 17,63 (.694) | 9,15 (.360) |
| DD | 50 | DD51217 | 74,04 (2.915) | 38,10 (1.500) | 61,11 (2.406) | 15,47 (.609) | — | 18,64 (.734) | 11,89 (.468) |

## Dataphone

Available in 25 position only
Mounting hardware included
2 screws #4-40 x 11/16 long

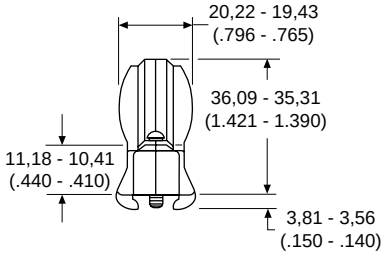


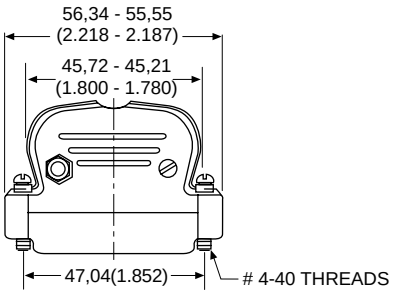


Materials and Finishes

| | |
|---|---|
| Backshell Material: | Black Thermoplastic, UL 94V-0 rated |
| Hardware Material: | Steel |
| Hardware Finish: | Clear Chromate over Cadmium or Zinc |

| Shell Size | Layout | Part Number | Max. Cable Entry |
|---|---|---|---|
| DB | 25 | DB51226-1B | 7,92 (.312) |



ITT Cannon

Dimensions are shown in mm (inch)
Dimensions subject to change

## Quick Disconnect for IDC Cable

IDC

Kit consists of 1 front shell, 1 rear shell, 2 strain reliefs, 5 screws

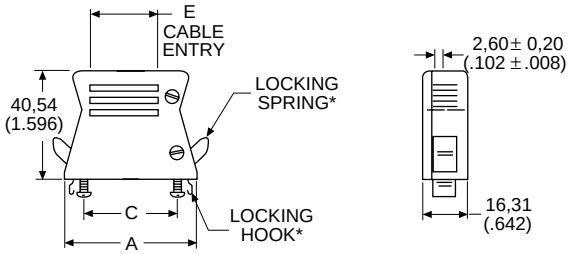


* Order optional locking hardware separately.

### Materials and Finishes

| | |
|---|---|
| Material: | Black Thermoplastic, UL 94V-0 rated |

| Shell Size | Layout | Part Number | A max. | C ±0,13 (.005) | E ±0,20 (.008) |
|---|---|---|---|---|---|
| DE | 9 | DE115386-1B | 40,69 (1.602) | 24,99 (.984) | 14,99 (.590) |
| DA | 15 | DA115386-2B | 49,00 (1.929) | 33,30 (1.311) | 23,29 (.917) |
| DB | 25 | DB115386-3B | 62,69 (2.468) | 47,04 (1.852) | 36,98 (1.456) |
| DC | 37 | DC115386-4B | 79,20 (3.118) | 63,50 (2.500) | 53,49 (2.106) |

## Quick Disconnect for Round Cable

Straight and 90° Exit

Kit consists of 1 front shell, 1 rear shell, 1 cable clamp, 1 spacer, 4 self-tapping screws, 2 machined screws

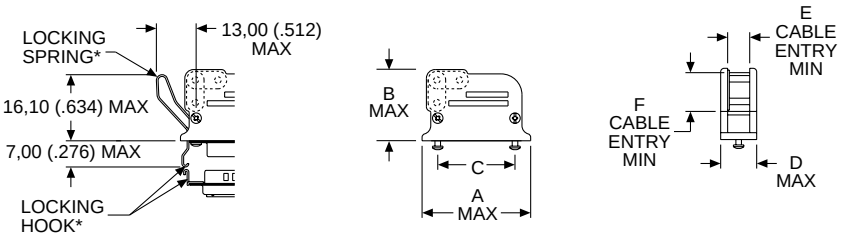


* Order optional locking hardware separately.

### Materials and Finishes

| | |
|---|---|
| Material: | Black Thermoplastic, UL 94V-0 rated |

| Shell Size | Layout | Part Number | A max. | B max. | C ±0,15 (.006) | D max. | E min. | F min. |
|---|---|---|---|---|---|---|---|---|
| DE | 9 | DE115339 | 41,33 (1.627) | 32,41 (1.276) | 25,00 (.984) | 16,51 (.650) | 7,70 (.303) | 6,70 (.264) |
| DA | 15 | DA115339-1 | 49,63 (1.954) | 32,41 (1.276) | 33,30 (1.311) | 16,51 (.650) | 7,70 (.303) | 6,70 (.264) |
| DB | 25 | DB115339-2 | 63,65 (2.506) | 40,44 (1.592) | 47,04 (1.852) | 16,51 (.650) | 7,70 (.303) | 17,70 (.697) |
| DC | 37 | DC115339-3 | 79,86 (3.144) | 42,42 (1.670) | 63,50 (2.500) | 16,51 (.650) | 7,70 (.303) | 17,70 (.697) |
| DD | 50 | DD115339-4 | 77,57 (3.054) | 42,42 (1.670) | 61,10 (2.406) | 19,51 (.768) | 10,69 (.421) | 17,70 (.697) |

## Optional Locking Hardware/Mechanism

Optional hardware provides quick disconnect for either flat IDC cable or round jacketed cable.

Order 2 per connector

| | |
|---|---|
| Material: | Corrosion-resistant steel |

Locking Hook

Locking Spring

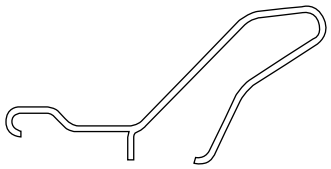

| Lock Hook Part Number |
|---|
| 015-8755-000 |
| 015-8755-001 |

| Lock Spring Part Number |
|---|
| 259-8760-000 |

NOTE: Not for use on rear panel mounted connectors.

## Screw Lock Assemblies

ITT Cannon offers the largest variety of locking and latching hardware.
Refer to the accessories selection guide on pages 198-199 for use with ITT Cannon backshells.

Product Features
- Ensures positive mating
- Provides locking and latching for high vibration applications

Front Panel Mount

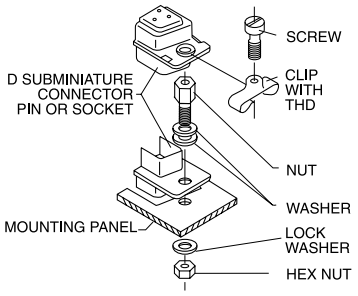


Rear Panel Mount

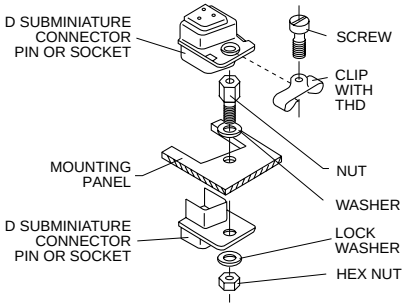


Male Screw Lock

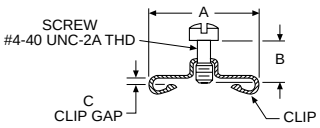


Kit consists of 1 screw and 1 clip
Order 2 per connector

| | |
|---|---|
| Material: | Steel |
| Finish: | Yellow Chromate over Cadmium or Zinc |

| Shell Size | Part Number | A ±0,38 (.015) | B ±0,25 (.010) | C ±0,13 (.005) |
|---|---|---|---|---|
| DE, DA, DB, DC | D20419 | 14,10 (.555) | 6,35 (.250) | 1,22 (.048) |
| DE, DA, DB, DC | D20419-18 | 14,10 (.555) | 7,14 (.281) | 1,70 (.067) |
| DE, DA, DB, DC | D20419-21 | 14,10 (.555) | 7,14 (.281) | 2,34 (.092) |
| DE, DA, DB, DC | D20419-104 | 14,10 (.555) | 7,92 (.312) | 2,34 (.092) |
| DD | D20420 | 16,66 (.656) | 6,35 (.250) | 1,22 (.048) |
| DD | D20420-13 | 16,66 (.656) | 7,14 (.281) | 1,70 (.067) |
| DD | D20420-15 | 16,66 (.656) | 7,14 (.281) | 2,34 (.092) |
| DD | D20420-86 | 16,66 (.656) | 7,92 (.312) | 2,34 (.092) |



Dimensions are shown in mm (inch)
Dimensions subject to change

## Female Screw Lock

Kit consists of 1 nut, 3 washers, 1 lock washer, 1 hex nut
Order 2 per connector

| | |
|---|---|
| Material: | Steel |

Front Panel Mount

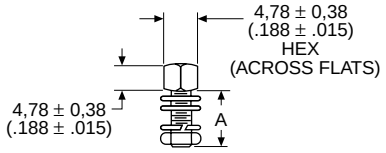


Rear Panel Mount

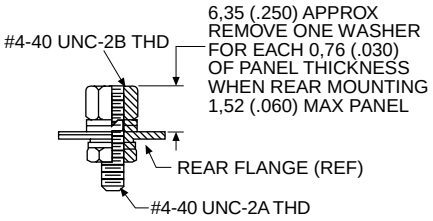


NOTE: (1) A 6 inch/pound (female) and 4 inch/pound (male) maximum torque during assembly is recommended on steel screw lock assemblies.
(2) A third flat washer is supplied for front panel mounting of tab shell connectors.

| Yellow Chromate over Cadmium | Mil Spec Part Number | Zinc With Clear Chromate | A ±0,38 (.015) |
|---|---|---|---|
| D20418-2 | M24308/26-1 | D20418-80 | 7,92 (.312) |
| D20418-50 | — | — | 12,70 (.500) |
| D20418-39 | M24308/26-2 | — | 15,88 (.625) |
| D20418-74 | — | — | 19,05 (.750) |

## Female Screw Lock for High Volume Applications

Order 2 per connector
Tool required for installation. See page 211.

| | |
|---|---|
| Material: | Steel |
| Finish: | Zinc |

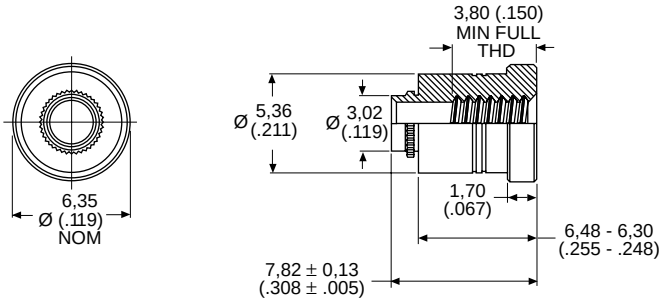


NOTE: Not suitable for rear panel mounting.

| Part Number | Thread Code | Nominal Panel Thickness |
|---|---|---|
| 980-2000-858 | #4-40 | 1,09 – 0,91 (.043 – .036) |
| 980-2000-859 | M3 | 1,09 – 0,91 (.043 – .036) |

## Screw Locks for Connectors with Integral Threaded Inserts

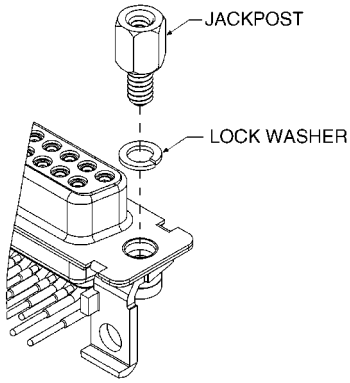


Kit consists of 1 jackpost, 1 lock washer
Order 2 per connector

| | |
|---|---|
| Material: | Brass |
| Finish: | Nickel |

Jackpost

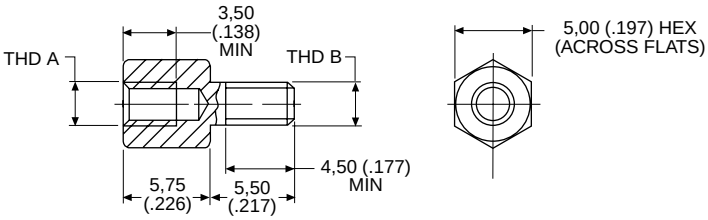


| Part Number | Thread Code | |
|---|---|---|
| | THD A | THD B |
| D121073-39 | #4-40 UNC-2B | #4-40 UNC-2A |
| D121073-40 | M3 | #4-40 UNC-2A |
| D121073-41 | #4-40 UNC-2B | M3 |
| D121073-42 | M3 | M3 |

## Slide Lock Assemblies

ITT Cannon offers the largest variety of locking and latching hardware. Refer to the accessories selection guide on pages 198-199 for use with ITT Cannon backshells.

Product Features
- Ensures positive mating
- Provides locking and latching for high vibration applications

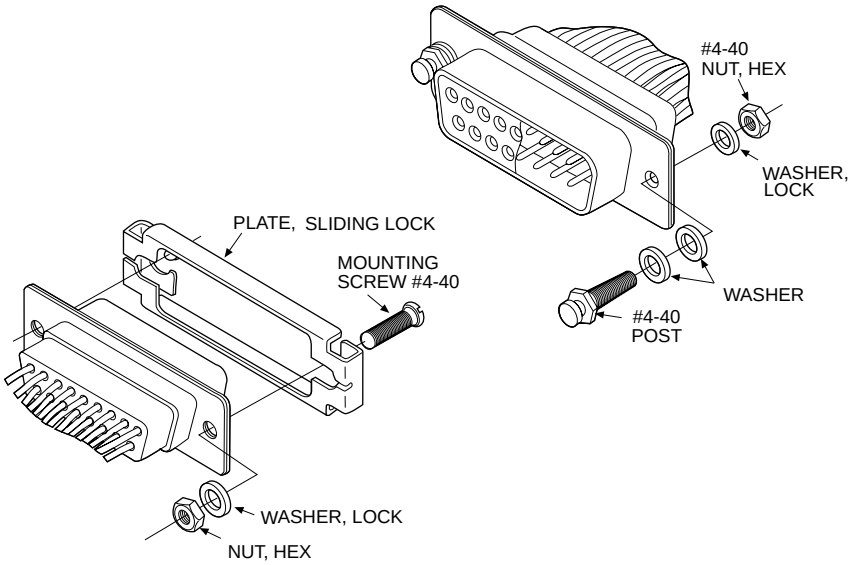


### Sliding Lock Retainer Assembly

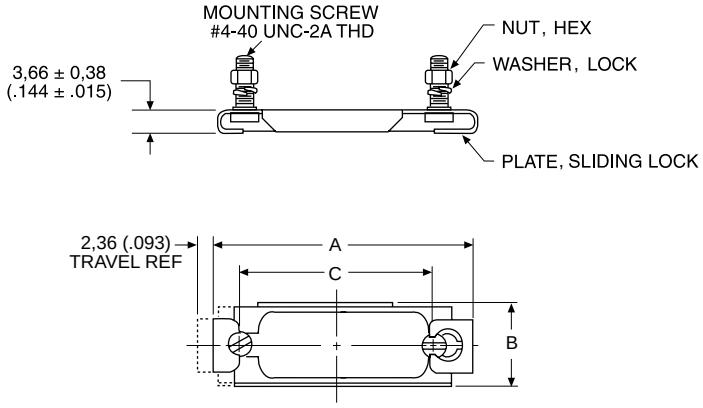


- Ideal for Ethernet Applications
- Kit consists of 1 sliding lock plate, 2 mounting screws, 2 lock washers, 2 hex nuts
- Order 1 kit per connector

| Description | Material | Finish/ Treatment |
|---|---|---|
| Sliding Lock Plate | Stainless Steel | Passivated |
| Screw, Mounting | Steel | Yellow Chromate Over Cadmium or Zinc |
| Washer, Lock | | |
| Nut, Hex | | |

| Shell Size | Layout | Part Number | A ±0,38 (.015) | B ±0,38 (.015) | C ±0,13 (.005) |
|---|---|---|---|---|---|
| DE | 9 | DE51224-1 | 35,05 (1.380) | 12,70 (.500) | 25,00 (.984) |
| DA | 15 | DA51220-1* | 43,70 (1.720) | 12,70 (.500) | 33,32 (1.312) |
| DB | 25 | DB51221-1 | 57,40 (2.260) | 12,70 (.500) | 47,04 (1.852) |
| DC | 37 | DC51222-1 | 73,86 (2.908) | 12,70 (.500) | 63,50 (2.500) |
| DD | 50 | DD51223-1 | 71,47 (2.814) | 15,47 (.609) | 61,11 (2.406) |

* Meets IEEE 802.3 Ethernet Specification



Dimensions are shown in mm (inch)
Dimensions subject to change

## Slide Lock Post Assemblies

Kit consists of 1 post, 2 washers, 1 lock washer, 1 hex nut
Order 2 kits per connector

| | |
|---|---|
| Part Number: | D53018 |

Materials and Finishes

| | |
|---|---|
| Material: | Steel |
| Finish: | Yellow Chromate over Cadmium or Zinc |

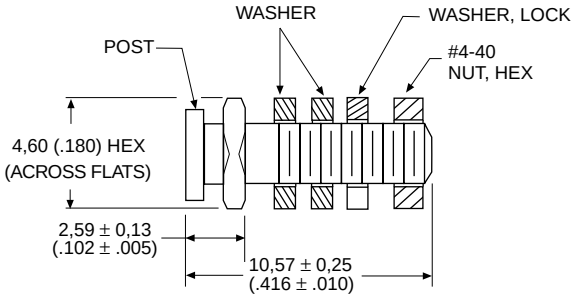


NOTE: When rear-mounting connector to a 1/16″ panel, delete the 2 washers.

## Slide Lock Post for High Volume Applications

Order 2 per connector
Tool required for installation. See this page.

| | |
|---|---|
| Part Number: | 980-2000-860 |
| Panel Thickness: | 1,09-0,91 (.043-.036) |

Materials and Finishes

| | |
|---|---|
| Material: | Stainless Steel |
| Treatment: | Passivated |

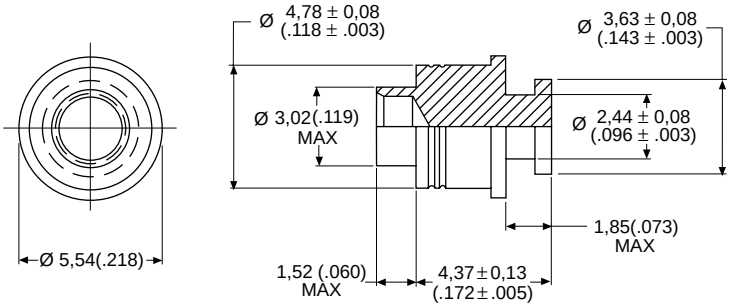


NOTE: Not suitable for rear panel mounting

## Tool for High Volume Applications

| | |
|---|---|
| Part Number: | 995-2000-092 |

## Spring Latch Assemblies

ITT Cannon offers the largest variety of locking and latching hardware. Refer to the accessories selection guide on pages 198-199 for use with ITT Cannon Connectors.

Product Features
- Low Cost
- Minimizes field connection time
- Positive lock between connectors
- Packaged 2 kits per bag

Materials and Finishes

| | |
|---|---|
| Material: | Stainless Steel |
| Treatment: | Passivated |

Unlocked

Locked

### Spring Latch Plate Assembly

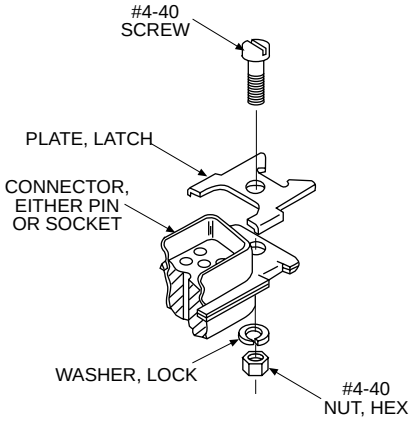


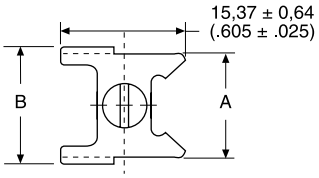


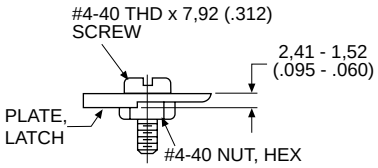


| Shell Size | Layout | Part Number | A ±0,38 (.015) | B ±0,38 (.015) |
|---|---|---|---|---|
| DE, DA, DB, DC | 9, 15, 25, 37 | D110278 | 12,42 (.489) | 14,35 (.565) |
| DD | 50 | D110280 | 15,47 (.609) | 17,09 (.673) |

Kit consists of 1 plate, 1 screw, 1 lock washer, 1 hex nut
Order 2 kits per connector

### Spring Latch Assembly

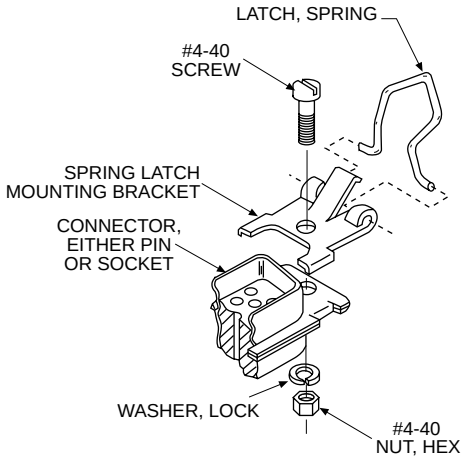


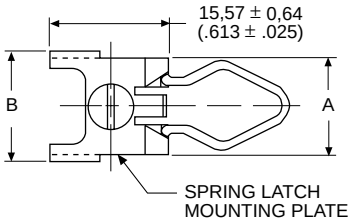


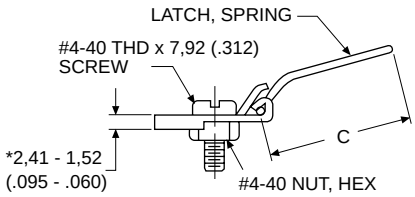


* Dimension does not apply to rear panel mounting.

| Shell Size | Layout | Part Number | A ±0,38 (.015) | B ±0,38 (.015) | C ±0,51 (.020) |
|---|---|---|---|---|---|
| DE, DA, DB, DC | 9, 15, 25, 37 | D110277 | 12,42 (.489) | 14,35 (.565) | 18,59 (.732) |
| DD | 50 | D110279 | 15,49 (.609) | 17,09 (.673) | 18,59 (.732) |

Kit consists of 1 spring, 1 screw, 1 bracket, 1 lock washer, 1 hex nut
Order 2 kits per connector
Front panel mounting



Dimensions are shown in mm (inch)
Dimensions subject to change

## Jackscrew/Jackpost Assemblies

ITT Cannon offers the largest variety of locking and latching hardware. Refer to the accessories selection guide on pages 198-199 for use with ITT Cannon Connectors.

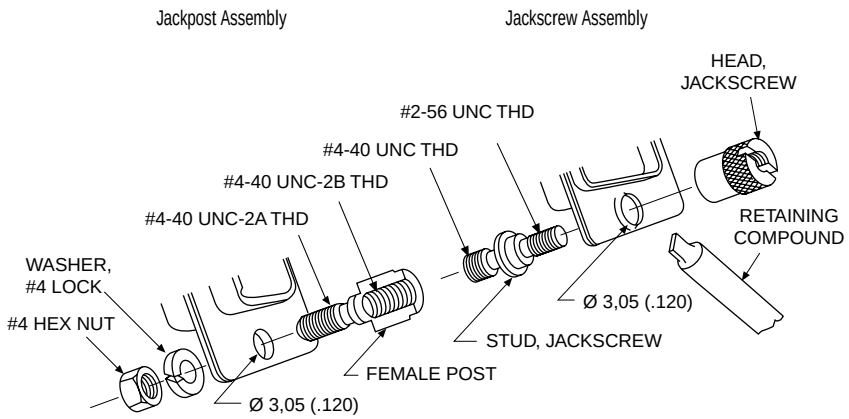


### Jackscrew Assembly

Kit consists of 2 studs, 2 heads, 1 tube retaining compound
Order one kit per connector

| | |
|---|---|
| Part Number: | D110550 |

Materials and Finishes

| | |
|---|---|
| Material: | Stainless Steel |

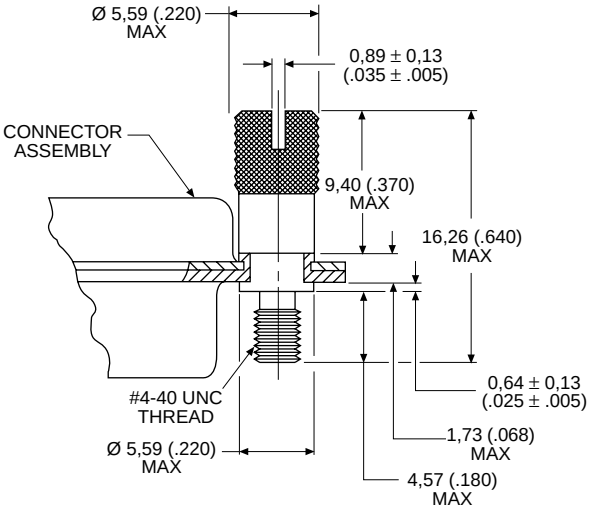


### Jackpost Assembly

Kit consists of 2 posts, 2 hex nuts, 2 lock washers
Order one kit per connector

| | |
|---|---|
| Part Number: | D110551 |

Materials and Finishes

| | |
|---|---|
| Material: | Stainless Steel |
| Treatment: | Passivated |

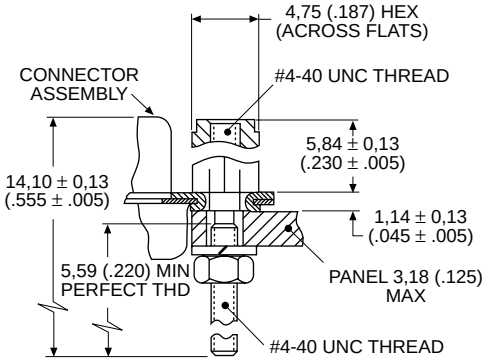


NOTE: Jackpost is not compatible with rear-panel mount connectors.

## Guide Pin Plate

Female

Useful in blind mate applications.
Kit consists of 1 plate, 2 screws
Guide pin inserts for Size 8 cavities for Combo D® connectors also available. See page 95.

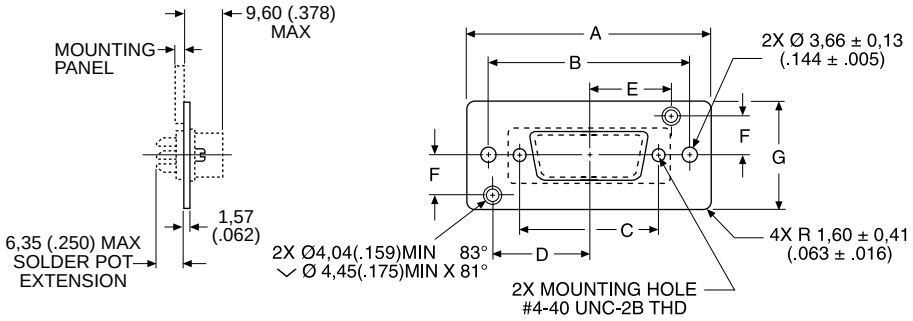


| | |
|---|---|
| Plate and Hardware Material: | Steel |
| Plate and Hardware Finish: | Yellow Chromate over Zinc or Cadmium |

| Shell Size | Layout | Part Number | A ±0,41 (.016) | B ±0,13 (.005) | C ±0,13 (.005) | D ±0,13 (.005) | E ±0,13 (.005) | F ±0,13 (.005) | G ±0,41 (.016) | H ±0,41 (.016) | J ±0,41 (.016) | K ±0,41 (.016) |
|---|---|---|---|---|---|---|---|---|---|---|---|---|
| DE | 9 | DE111920 | 49,61 (1.953) | 40,08 (1.578) | 25,00 (.986) | 18,65 (.734) | 15,27 (.601) | 9,52 (.375) | 25,40 (1.000) | 30,58 (1.204) | 12,29 (.484) | 6,15 (.242) |
| DA | 15 | DA22214 | 57,96 (2.282) | 48,41 (1.906) | 33,32 (1.312) | 22,81 (.898) | 19,43 (.765) | 9,52 (.375) | 25,40 (1.000) | 38,91 (1.532) | 12,29 (.484) | 6,15 (.242) |
| DB | 25 | DB22254 | 71,63 (2.820) | 62,13 (2.446) | 47,04 (1.852) | 29,67 (1.168) | 26,29 (1.035) | 9,52 (.375) | 25,40 (1.000) | 51,21 (2.016) | 11,91 (.469) | 5,94 (.234) |
| DC | 37 | DC22071 | 88,11 (3.469) | 78,59 (3.094) | 63,50 (2.500) | 37,90 (1.492) | 34,52 (1.359) | 9,52 (.375) | 25,40 (1.000) | 67,49 (2.657) | 11,91 (.469) | 5,94 (.234) |
| DD | 50 | DD21961 | 85,72 (3.375) | 76,20 (3.000) | 61,11 (2.406) | 36,50 (1.437) | 33,32 (1.312) | 11,10 (.437) | 28,58 (1.125) | 65,10 (2.563) | 14,30 (.563) | 7,16 (.282) |

Recommended Panel Cutout

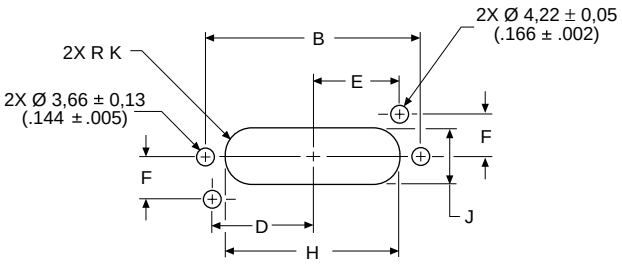




ITT Cannon

Dimensions are shown in mm (inch)
Dimensions subject to change

## Guide Pin Plate

Male

Useful in blind mate applications.
Kit consists of 1 plate, 2 sems screws, 2 rivets, 2 guide pins, 2 washers
Guide pin inserts for Size 8 cavities for Combo D® connectors also available. See page 95.

| | |
|---|---|
| Plate and Hardware Material: | Steel |
| Plate and Hardware Finish: | Yellow Chromate over Zinc or Cadmium |
| Guide Pin Material: | Stainless Steel |

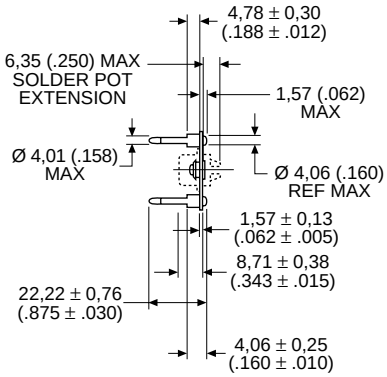


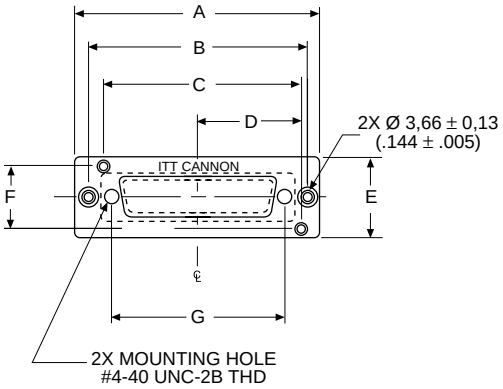


| Shell Size | Layout | Part Number | A ±0,38 (.015) | B ±0,13 (.005) | C ±0.25 (.010) | D ±0,13 (.005) | E ±0,38 (.015) | F ±0,25 (.010) | G ±0.13 (.005) | H ±0.25 (.010) | J ±0.38 (.015) | K ±0,13 (.005) |
|---|---|---|---|---|---|---|---|---|---|---|---|---|
| DE | 9 | DE111919 | 49,61 (1.953) | 40,08 (1.578) | 33,91 (1.335) | 18,65 (.734) | 25,40 (1.000) | 19,05 (.750) | 25,00 (.984) | 12,29 (.484) | 30,58 (1.204) | 6,15 (.242) |
| DA | 16 | DA22213 | 57,94 (2.281) | 48,41 (1.906) | 42,24 (1.663) | 22,81 (.898) | 25,40 (1.000) | 19,05 (.750) | 33,32 (1.312) | 12,29 (.484) | 38,89 (1.531) | 6,15 (.242) |
| DB | 25 | DB22255 | 71,63 (2.820) | 62,13 (2.446) | 55,96 (2.203) | 29,67 (1.168) | 25,40 (1.000) | 19,05 (.750) | 47,04 (1.852) | 12,29 (.484) | 51,99 (2.047) | 6,15 (.242) |
| DC | 37 | DC22070 | 88,09 (3.468) | 78,42 (3.094) | 72,42 (2.851) | 37,90 (1.492) | 25,40 (1.000) | 19,05 (.750) | 63,50 (2.500) | 12,29 (.484) | 68,25 (2.687) | 6,15 (.242) |
| DD | 50 | DD21962 | 85,72 (3.375) | 76,20 (3.000) | 69,82 (2.749) | 36,50 (1.437) | 28,58 (1.125) | 22,20 (.874) | 61,11 (2.406) | 15,06 (.593) | 66,93 (2.635) | 7,52 (.296) |

Recommended Panel Cutout

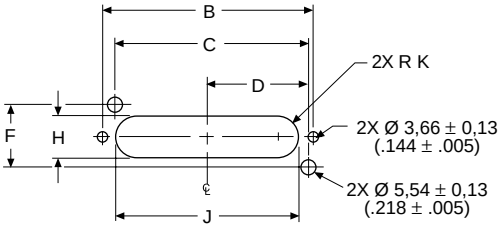

## Connector Saver

Connector Saver

Connector Savers are used to minimize wear on cable or panel connectors.

Engaging Face, Pin Side

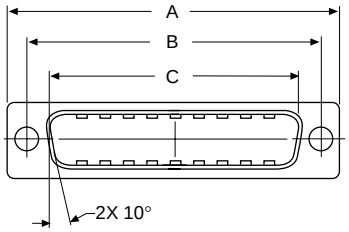


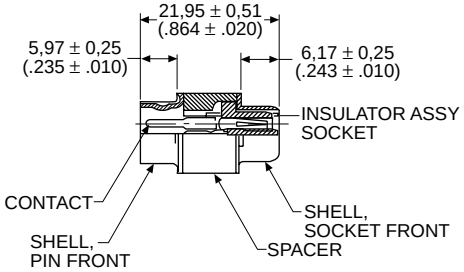


Note: Hardware removed for clarity.

| Shell Size | Layout | Part Numbers | A ±0,40 (.015) | B ±0,25 (.010) | C ±0,25 (.010) |
|---|---|---|---|---|---|
| DE | 9 | DEBU111515 | 30,81 (1.213) | 24,99 (.984) | 16,92 (.666) |
| DA | 15 | DABU111512 | 39,14 (1.541) | 33,32 (1.312) | 25,25 (.994) |
| DB | 25 | DBBU111511 | 53,04 (2.088) | 47,04 (1.852) | 38,96 (1.534) |

Note: DC-37 and DD-50 not available.

## Specifications

| |
|---|
| Temperature: −55° C to 105° C |
| Current Rating: 7 A |
| Dielectric Withstanding Voltage: 500 VAC at Sea Level |

## Materials and Finishes

| Description | Material | Finish |
|---|---|---|
| Shells | Steel | Tin/Lead |
| Insulator | Black Thermoplastic, UL 94V-0 | — |
| Contacts | Copper Alloy | Gold Over Nickel |
| Spacer | Zinc Alloy | — |
| Locking Hardware | Steel | Clear Chromate Over Zinc |



Dimensions are shown in mm (inch)
Dimensions subject to change

## Gender Changer

### Male/Male

Gender Changers modify the mating interface to allow connectors of the same genders to mate.

Product Features

- Low cost way to correct design errors
- Optional hardware allows design flexibility

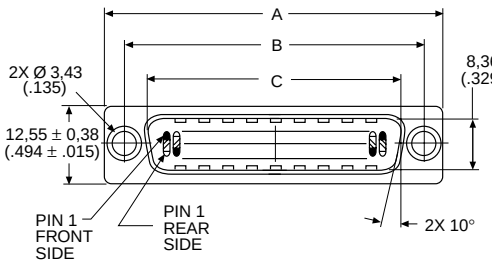


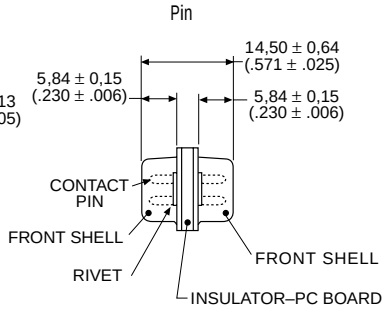


Note: Grounding dimples available on male/male only.

| Shell Size | Layout | Part Number Without Hardware | Part Number With Hardware | A ±0,38 (.015) | B ±0,13 (.005) | C ±0,13 (.005) |
|---|---|---|---|---|---|---|
| DE | 9 | DE111805-1 | DE111805-5 | 30,81 (1.213) | 24,99 (.984) | 16,92 (.666) |
| DA | 15 | DA111806-1 | DA111806-5 | 39,14 (1.541) | 33,32 (1.312) | 25,25 (.994) |
| DB | 25 | DB111807-1 | DB111807-5 | 53,04 (2.088) | 47,04 (1.852) | 38,96 (1.534) |
| DC | 37 | DC111808-1 | DC111808-5 | 69,32 (2.729) | 63,50 (2.500) | 55,42 (2.182) |

Note: DD-50 not available in male/male.

### Female/Female

Gender Changers modify the mating interface to allow connectors of the same genders to mate.

Product Features

- Low cost way to correct design errors
- Optional hardware allows design flexibility

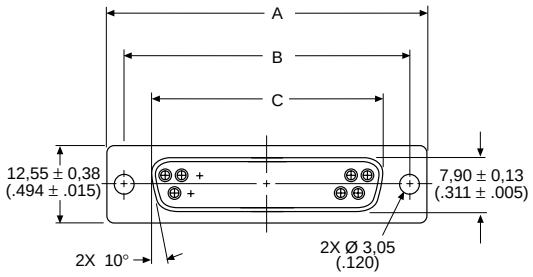


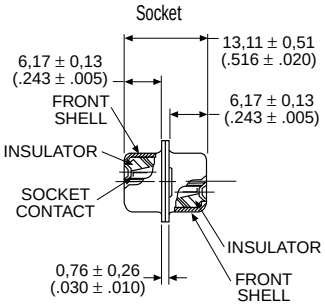


| Shell Size | Layout | Part Number Without Hardware | Part Number With Hardware | A ±0,38 (.015) | B ±0,13 (.005) | C ±0,13 (.005) |
|---|---|---|---|---|---|---|
| DE | 9 | DE111813 | DE111813-3 | 30,81 (1.213) | 24,99 (.984) | 16,33 (.643) |
| DA | 15 | DA111810 | DA111810-3 | 39,14 (1.541) | 33,32 (1.312) | 24,66 (.971) |
| DB | 25 | DB111811 | DB111811-2 | 53,04 (2.088) | 47,04 (1.852) | 38,38 (1.511) |

Note: DC-37 and DD-50 not available for female/female.

## Specifications

| |
|---|
| Temperature: −55° C to 105° C |
| Current Rating: 3 A |
| Dielectric Withstanding Voltage: 500 VAC at Sea Level |

## Materials and Finishes

| Description | | Material | Finish |
|---|---|---|---|
| Shells | | Steel | Tin/Lead |
| Insulator | M/M | Glass Epoxy | — |
| | F/F | Black Thermoplastic, UL 94V-0 | — |
| Contacts | | Copper Alloy | Gold Over Nickel |
| Rivets (M/M) | | Copper Alloy | Tin/Lead |
| Locking Hardware | | Steel | Clear Chromate Over Cadmium or Zinc and Mylar |

## Dust Cap

Dust caps provide protection from moisture and dust for unused I/O ports.

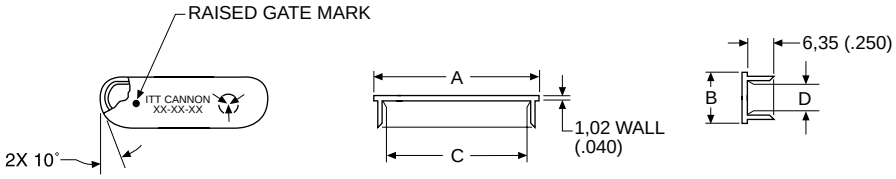


Product Features

Conductive Dust Caps provide a surface resistivity of at least 1 x $10^5$ ohms/sq
Dust Caps meet the static decay test requirements of MIL-B-81705C, Type II.
Dust Caps have an integral flange for easy application and removal.

Materials and Finishes

| | |
|---|---|
| Material: | Black Polyethylene |

NOTE: C dim. applies at point of maximum integral interface length.

| Part Number | I.D. | A | B | C | D |
|---|---|---|---|---|---|
| DE-59-20 | Socket | 20,32 (.800) | 11,43 (.450) | 16,36 (.644) | 7,59 (.299) |
| DA-59-20 | Socket | 28,45 (1.120) | 11,68 (.460) | 24,59 (.968) | 7,62 (.300) |
| DB-59-20 | Socket | 42,42 (1.670) | 11,68 (.460) | 38,25 (1.506) | 7,49 (.295) |
| DC-59-20 | Socket | 58,93 (2.320) | 11,68 (.460) | 54,81 (2.158) | 7,37 (.290) |
| DD-59-20 | Socket | 56,90 (2.240) | 14,48 (.570) | 53,11 (2.091) | 10,41 (.410) |
| DE-60-20 | Pin | 21,84 (.860) | 12,95 (.510) | 17,78 (.700) | 8,92 (.351) |
| DA-60-20 | Pin | 30,48 (1.200) | 12,95 (.510) | 26,52 (1.044) | 9,02 (.355) |
| DB-60-20 | Pin | 44,20 (1.740) | 13,46 (.530) | 39,60 (1.559) | 9,09 (.358) |
| DC-60-20 | Pin | 60,71 (2.390) | 13,46 (.530) | 56,90 (2.240) | 9,37 (.369) |
| DD-60-20 | Pin | 58,17 (2.290) | 16,00 (.630) | 54,28 (2.137) | 12,04 (.474) |

## Interfacial Seal

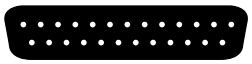

Interfacial seals provide moisture resistance at the mating interface.

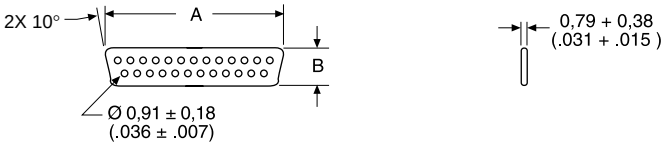


Product Features

Other Interfacial Seals in the Combo D® layouts are available upon request.

Materials and Finishes

| | |
|---|---|
| Material: | Silastic Sheet |

| Shell Size | Layout | Part Number | A | B |
|---|---|---|---|---|
| DE | 9 | DE53750 | 16,66 (.656) | 8,41 (.331) |
| DA | 15 | DA53750-1 | 24,99 (.984) | 8,41 (.331) |
| DB | 25 | DB53750-2 | 38,88 (1.531) | 8,41 (.331) |
| DC | 37 | DC53750-3 | 55,14 (2.171) | 8,41 (.331) |
| DD | 50 | DD53750-4 | 52,78 (2.078) | 11,10 (.437) |
| DC | 21WA4 | 075-0354-003 | 55,14 (2.171) | 8,41 (.331) |

## Potting Shell



Potting shells are molded with a thin flange 0,76 (.030) to permit the use of D Subminiature locking devices.
Potting shells hold epoxy in place during curing.

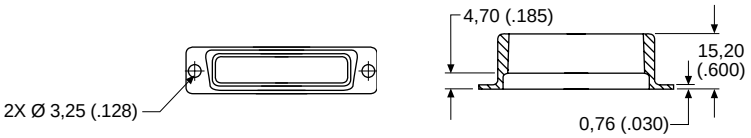


Materials and Finishes

| | |
|---|---|
| Material: | Nylon |
| Color: | Natural (white) |

| Shell Size | Layout | Part Number |
|---|---|---|
| DE | 9 | DE50904-1 |
| DA | 15 | DA50905-1 |
| DB | 25 | DB50906-1 |
| DC | 37 | DC50907-1 |
| DD | 50 | DD50908-1 |



Dimensions are shown in mm (inch)
Dimensions subject to change

Selection Index Page

## Reader's Resource


Dimensional Reference Data
- Panel Mounting . . . 220
- Panel Cutouts . . . 221

Contact Cavity Arrangements
- Combo D® — Plug . . . 222
- Combo D® — Receptacle . . . 223
- Standard — Plug and Receptacle . . . 224

Pushfit/Boardlock — Standard and European . . . 225

Alternate Technical Configurations
- 50 Ohm Coaxial Contact — Straight and 90° . . . 225
- Bracket — Standard and European . . . 226

Hardware Views
- Standard . . . 226
- European . . . 227

Printed Circuit Board (PCB) Hole Patterns
- Combination Layouts
  - Coaxial 90° — Standard
    - Plug . . . 228
    - Receptacle . . . 231
  - Coaxial 90° — European
    - Plug . . . 234
    - Receptacle . . . 236
  - Coaxial Straight — Standard/European
    - Plug . . . 238
    - Receptacle . . . 241
  - High Power 90° — Standard
    - Plug . . . 244
    - Receptacle . . . 247
  - High Power 90° — European
    - Plug . . . 250
    - Receptacle . . . 252
  - High Power/High Voltage Straight — Standard/European
    - Plug . . . 254
    - Receptacle . . . 257
  - 90° PC Tails (Size 20 Signal Contacts only) — European
    - Plug . . . 260
    - Receptacle . . . 263
  - Straight PC Tails (Size 20 Signal Contacts only) — Standard/European
    - Plug . . . 266
    - Receptacle . . . 269
- Standard Layouts
  - 90° Standard — Plug and Receptacle . . . 272
  - 90° European — Plug and Receptacle . . . 273
  - Straight PC Tails — Plug and Receptacle Standard/European . . . 274

Lease Tooling . . . 275

Glossary of Terms . . . 276

Obsolete Products/Available Products Not Previously Listed . . . 282

Part Number Index . . . 283

Product Safety and Warranty . . . 297






Dimensions are shown in mm (inch)
Dimensions subject to change

## Panel Mounting

Figure 1A

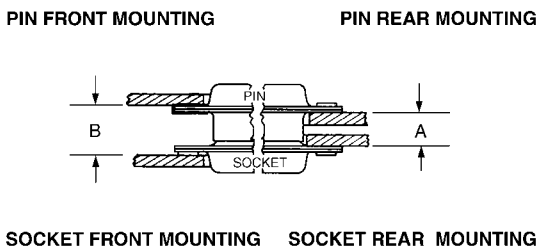


Figure 1B

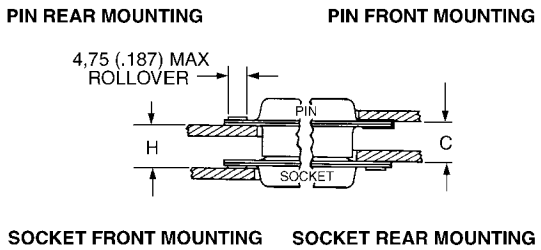


Figure 2

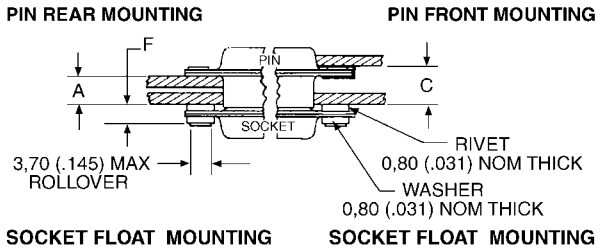


Figure 3

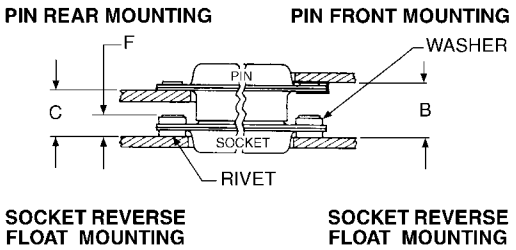


| Figure Number | Combination of Mated Connectors Size | Pin (See Note Below) | Socket | A +0,76 (.030) | B +0,76 (.030) | C +0,76 (.030) | F ±0,25 (.010) | H +0,76 (.030) |
|---|---|---|---|---|---|---|---|---|
| 1A, 1B | A, E | Standard | Standard | 6,35 (.250) | 8,63 (.340) | 7,49 (.295) | — | 7,49 (.295) |
| 1A, 1B | B, C, D | Standard | Standard | 6,04 (.238) | 8,71 (.343) | 7,56 (.298) | — | 7,18 (.283) |
| 2 | A, E | Standard | Float Mount | 5,53 (.218) | — | 6,68 (.263) | 3,04 (.120) | — |
| 2 | B, C, D | Standard | Float Mount | 5,23 (.206) | — | 6,75 (.266) | 3,04 (.120) | — |
| 2 | A, E | Float Mount | Standard | 5,53 (.218) | — | 6,68 (.263) | 3,04 (.120) | — |
| 2 | B, C, D | Float Mount | Standard | 5,23 (.206) | — | 6,37 (.251) | 3,30 (.130) | — |
| 3 | A, E | Standard | Reverse Float Mount | — | 9,09 (.358) | 7,95 (.313) | 3,04 (.120) | — |
| 3 | B, C, D | Standard | Reverse Float Mount | — | 9,16 (.361) | 7,64 (.301) | 3,04 (.120) | — |
| 3 | A, E | Reverse Float Mount | Standard | — | 9,09 (.358) | 7,95 (.313) | 3,04 (.120) | — |
| 3 | B, C, D | Reverse Float Mount | Standard | — | 9,01 (.355) | 7,87 (.310) | 3,30 (.130) | — |

Notes:
1. A, B, C and H are dimensions between panels and represent the recommended limit to be used in the design of the connector mounting method.
2. It is recommended that only one assembly, either pin or socket, be float mounted.
3. Standard pin assemblies contained 0,38 (.015) thick front shells on E and A sizes; 0,61 (.024) thick front shells on B, C, and D sizes.
4. Standard connectors accommodate a #4 screw. Float mount connectors accommodate a #2 screw.





Dimensions are shown in mm (inch)
Dimensions subject to change

## Panel Cutouts

Standard Cutout

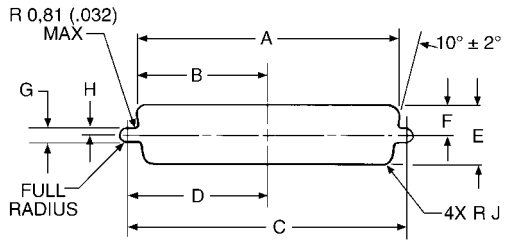


Rear Mounting Cutout (Optional)

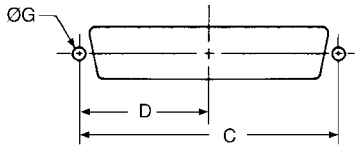


Front Panel Mounting

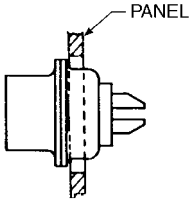


Standard Shell

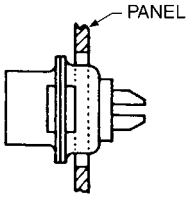


Dual Float Mount Shell

Rear Panel Mounting

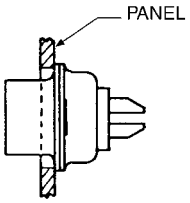


Standard Shell

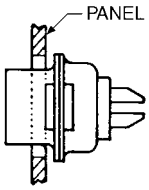


Dual Float Mount Shell

### Standard Shell

| Shell Size | Mounting Method | A ±0,13 (.005) | B ±0,13 (.005) | C ±0,13 (.005) | D ±0,13 (.005) | E ±0,13 (.005) | F ±0,13 (.005) | G ±0,05 (.002) | H ±0,05 (.002) | J ±0,05 (.002) |
|---|---|---|---|---|---|---|---|---|---|---|
| DE | Front | 22,19 (.874) | 11,09 (.437) | 24,99 (.984) | 12,49 (.492) | 13,03 (.513) | 6,52 (.257) | 3,04 (.120) | 1,52 (.060) | 2,10 (.083) |
| | Rear | 20,47 (.806) | 10,23 (.403) | 24,99 (.984) | 12,49 (.492) | 11,40 (.449) | 5,71 (.225) | 3,04 (.120) | 1,52 (.060) | 3,35 (.132) |
| DA | Front | 30,53 (1.202) | 15,26 (.601) | 33,32 (1.312) | 16,66 (.656) | 13,03 (.513) | 6,52 (.257) | 3,04 (.120) | 1,52 (.060) | 2,10 (.083) |
| | Rear | 28,80 (1.134) | 14,40 (.567) | 33,32 (1.312) | 16,66 (.656) | 11,40 (.449) | 5,71 (.225) | 3,04 (.120) | 1,52 (.060) | 3,35 (.132) |
| DB | Front | 44,27 (1.743) | 22,14 (.872) | 47,04 (1.852) | 23,52 (.926) | 13,03 (.513) | 6,52 (.257) | 3,04 (.120) | 1,52 (.060) | 2,10 (.083) |
| | Rear | 42,51 (1.674) | 21,25 (.837) | 47,04 (1.852) | 23,52 (.926) | 11,40 (.449) | 5,71 (.225) | 3,04 (.120) | 1,52 (.060) | 3,35 (.132) |
| DC | Front | 60,73 (2.391) | 30,37 (1.196) | 63,50 (2.500) | 31,75 (1.250) | 13,03 (.513) | 6,52 (.257) | 3,04 (.120) | 1,52 (.060) | 2,10 (.083) |
| | Rear | 59,08 (2.326) | 29,54 (1.163) | 63,50 (2.500) | 31,75 (1.250) | 11,40 (.449) | 5,71 (.225) | 3,04 (.120) | 1,52 (.060) | 3,35 (.132) |
| DD | Front | 58,34 (2.297) | 29,18 (1.149) | 61,11 (2.406) | 30,55 (1.203) | 15,82 (.623) | 7,92 (.312) | 3,04 (.120) | 1,52 (.060) | 2,10 (.083) |
| | Rear | 56,33 (2.218) | 28,16 (1.109) | 61,11 (2.406) | 30,55 (1.203) | 14,09 (.555) | 7,06 (.278) | 3,04 (.120) | 1,52 (.060) | 3,35 (.132) |

### Dual Float Mount Shell

| Shell Size | Mounting Method | A ±0,13 (.005) | B ±0,13 (.005) | C ±0,13 (.005) | D ±0,13 (.005) | E ±0,13 (.005) | F ±0,13 (.005) | G ±0,05 (.002) | H ±0,05 (.002) | J ±0,05 (.002) |
|---|---|---|---|---|---|---|---|---|---|---|
| DE | Front | 23,01 (.906) | 11,50 (.453) | 24,99 (.984) | 12,49 (.492) | 13,84 (.545) | 6,93 (.273) | 2,23 (.088) | 1,11 (.044) | 2,10 (.083) |
| | Rear | 21,28 (.838) | 10,64 (.419) | 24,99 (.984) | 12,49 (.492) | 12,21 (.481) | 6,12 (.241) | 2,23 (.088) | 1,11 (.044) | 3,35 (.132) |
| DA | Front | 31,34 (1.234) | 15,67 (.617) | 33,32 (1.312) | 16,66 (.656) | 13,84 (.545) | 6,93 (.273) | 2,23 (.088) | 1,11 (.044) | 2,10 (.083) |
| | Rear | 29,61 (1.166) | 14,80 (.583) | 33,32 (1.312) | 16,66 (.656) | 12,21 (.481) | 6,12 (.241) | 2,23 (.088) | 1,11 (.044) | 3,35 (.132) |
| DB | Front | 45,08 (1.775) | 22,55 (.888) | 47,04 (1.852) | 23,52 (.926) | 13,84 (.545) | 6,93 (.273) | 2,23 (.088) | 1,11 (.044) | 2,10 (.083) |
| | Rear | 43,33 (1.706) | 21,66 (.853) | 47,04 (1.852) | 23,52 (.926) | 12,21 (.481) | 6,12 (.241) | 2,23 (.088) | 1,11 (.044) | 3,35 (.132) |
| DC | Front | 61,54 (2.423) | 30,78 (1.212) | 63,50 (2.500) | 31,75 (1.250) | 13,84 (.545) | 6,93 (.273) | 2,23 (.088) | 1,11 (.044) | 2,10 (.083) |
| | Rear | 59,79 (2.354) | 29,89 (1.177) | 63,50 (2.500) | 31,75 (1.250) | 12,21 (.481) | 6,12 (.241) | 2,23 (.088) | 1,11 (.044) | 3,35 (.132) |
| DD | Front | 59,15 (2.329) | 29,59 (1.165) | 61,11 (2.406) | 30,55 (1.203) | 16,63 (.655) | 8,33 (.328) | 2,23 (.088) | 1,11 (.044) | 2,10 (.083) |
| | Rear | 57,15 (2.250) | 28,57 (1.125) | 61,11 (2.406) | 30,55 (1.203) | 14,90 (.587) | 7,46 (.294) | 2,23 (.088) | 1,11 (.044) | 3,35 (.132) |





Dimensions are shown in mm (inch)
Dimensions subject to change

## Plug Contact Cavity Arrangements — Combo D®

Face View Pin Insert

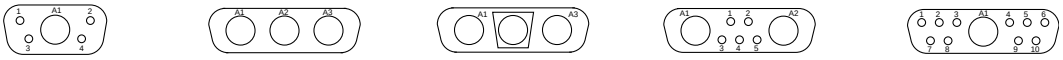

| | | | | | |
|---|---|---|---|---|---|
| Shell Size | E | A | A | A | A |
| Contact Arrangment | 5W1 | 3W3 | 3WK3 | 7W2 | 11W1 |
| No. of Size 20 Cavities | 4 #20 | 0 #20 | 0 | 5 #20 | 10 #20 |
| No. of Size 8 Cavities | 1 #8 | 3 #8 | 3 | 2 #8 | 1 #8 |

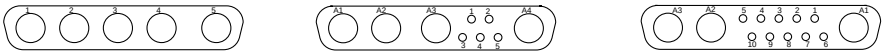

| | | | |
|---|---|---|---|
| Shell Size | B | B | B |
| Contact Arrangement | 5W5 | 9W4 | 13W3 |
| No. of Size 20 Cavities | 0 #20 | 5 #20 | 10 #20 |
| No. of Size 8 Cavities | 5 #8 | 4 #8 | 3 #8 |

| | | |
|---|---|---|
| Shell Size | B | B |
| Contact Arrangement | 17W2 | 21W1 |
| No. of Size 20 Cavities | 15 #20 | 20 #20 |
| No. of Size 8 Cavities | 2 #8 | 1 #8 |

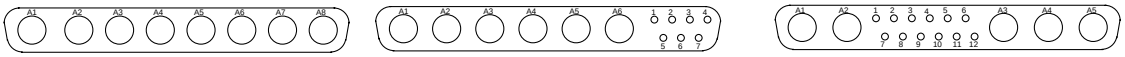

| | | | |
|---|---|---|---|
| Shell Size | C | C | C |
| Contact Arrangement | 8W8 | 13W6 | 17W5 |
| No. of Size 20 Cavities | 0 #20 | 7 #20 | 12 #20 |
| No. of Size 8 Cavities | 8 #8 | 6 #8 | 5 #8 |

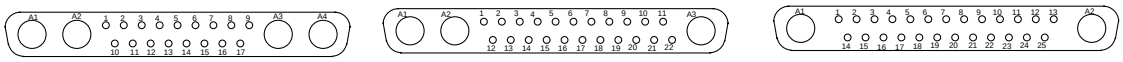

| | | | |
|---|---|---|---|
| Shell Size | C | C | C |
| Contact Arrangement | 21WA4 | 25W3 | 27W2 |
| No. of Size 20 Cavities | 17 #20 | 22 #20 | 25 #20 |
| No. of Size 8 Cavities | 4 #8 | 3 #8 | 2 #8 |

| | | |
|---|---|---|
| Shell Size | D | D |
| Contact Arrangement | 24W7 | 36W4 |
| No. of Size 20 Cavities | 17 #20 | 32 #20 |
| No. of Size 8 Cavities | 7 #8 | 4 #8 |

| | | |
|---|---|---|
| Shell Size | D | D |
| Contact Arrangement | 43W2 | 47W1 |
| No. of Size 20 Cavities | 41 #20 | 46 #20 |
| No. of Size 8 Cavities | 2 #8 | 1 #8 |

Note: Size 8 Cavities will Accommodate Removable Coaxial, High Power and/or High Voltage Contacts.





Dimensions are shown in mm (inch)
Dimensions subject to change

## Receptacle Contact Cavity Arrangements — Combo D®

Face View Socket Insert

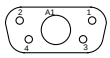
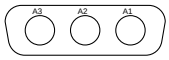
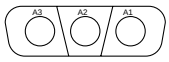
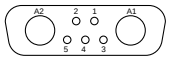
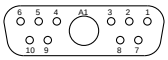

| | | | | | |
|---|---|---|---|---|---|
| Shell Size | E | A | A | A | A |
| Contact Arrangement | 5W1 | 3W3 | 3WK3 | 7W2 | 11W1 |
| No. of Size 20 Cavities | 4 #20 | 0 #20 | 0 | 5 #20 | 10 #20 |
| No. of Size 8 Cavities | 1 #8 | 3 #8 | 3 | 2 #8 | 1 #8 |

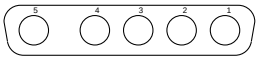
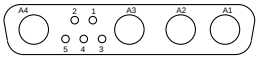
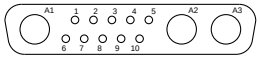

| | | | |
|---|---|---|---|
| Shell Size | B | B | B |
| Contact Arrangement | 5W5 | 9W4 | 13W3 |
| No. of Size 20 Cavities | 0 #20 | 5 #20 | 10 #20 |
| No. of Size 8 Cavities | 5 #8 | 4 #8 | 3 #8 |

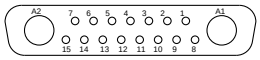
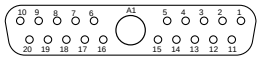

| | | |
|---|---|---|
| Shell Size | B | B |
| Contact Arrangement | 17W2 | 21W1 |
| No. of Size 20 Cavities | 15 #20 | 20 #20 |
| No. of Size 8 Cavities | 2 #8 | 1 #8 |

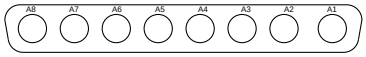
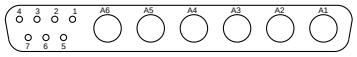
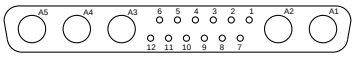

| | | | |
|---|---|---|---|
| Shell Size | C | C | C |
| Contact Arrangement | 8W8 | 13W6 | 17W5 |
| No. of Size 20 Cavitites | 0 #20 | 7 #20 | 12 #20 |
| No. of Size 8 Cavities | 8 #8 | 6 #8 | 5 #8 |

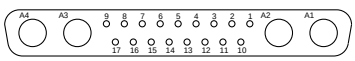
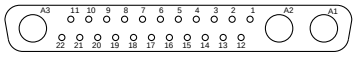
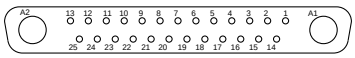

| | | | |
|---|---|---|---|
| Shell Size | C | C | C |
| Contact Arrangement | 21WA4 | 25W3 | 27W2 |
| No. of Size 20 Cavities | 17 #20 | 22 #20 | 25 #20 |
| No. of Size 8 Cavities | 4 #8 | 3 #8 | 2 #8 |

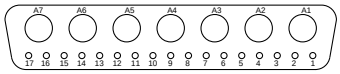
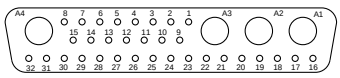

| | | |
|---|---|---|
| Shell Size | D | D |
| Contact Arrangement | 24W7 | 36W4 |
| No. of Size 20 Contacts | 17 #20 | 32 #20 |
| No. of Size 8 Contacts | 7 #8 | 4 #8 |

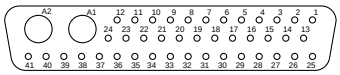
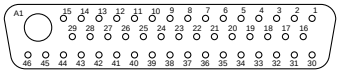

| | | |
|---|---|---|
| Shell Size | D | D |
| Contact Arrangement | 43W2 | 47W1 |
| No. of Size 20 Cavities | 41 #20 | 46 #20 |
| No. of Size 8 Cavities | 2 #8 | 1 #8 |

Note: Size 8 Cavities will Accommodate Removable Coaxial, High Power and/or High Voltage Contacts.

## Plug Contact Cavity Arrangements

Face View Pin Insert

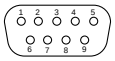
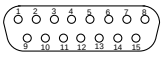
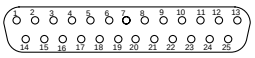

| | | | |
|---|---|---|---|
| Shell Size | E | A | B |
| Contact Arrangement | 9 | 15 | 25 |
| Contact Size | #20 | #20 | #20 |

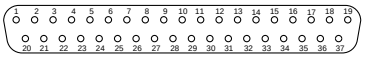
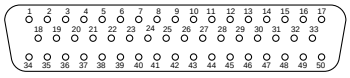

| | | |
|---|---|---|
| Shell Size | C | D |
| Contact Arrangement | 37 | 50 |
| Contact Size | #20 | #20 |

## Receptacle Contact Cavity Arrangements

Face View Socket Insert

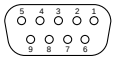
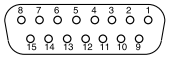
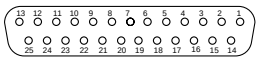

| | | | |
|---|---|---|---|
| Shell Size | E | A | B |
| Contact Arrangement | 9 | 15 | 25 |
| Contact Size | #20 | #20 | #20 |

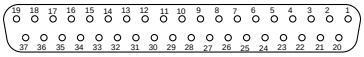
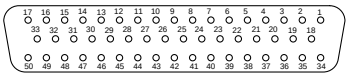

| | | |
|---|---|---|
| Shell Size | C | D |
| Contact Arrangement | 37 | 50 |
| Contact Size | #20 | #20 |





ITT Cannon

Dimensions are shown in mm (inch)
Dimensions subject to change

## Pushfit/Boardlock — Standard

Straight (Z)

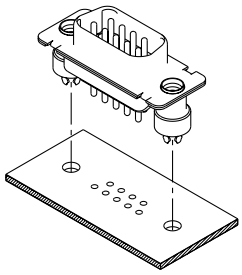

90° (C)

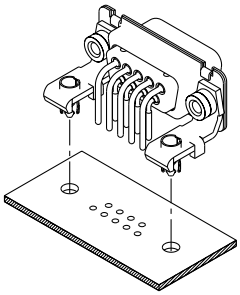

## Pushfit/Boardlock — European

Straight (-146)

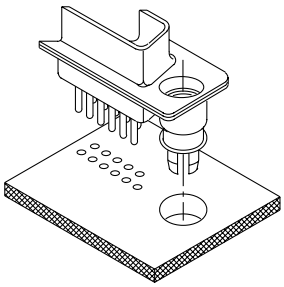

90° (-146)

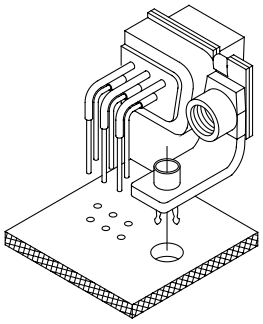

## Alternate 50 Ohm Coaxial Configuration

Straight (X)

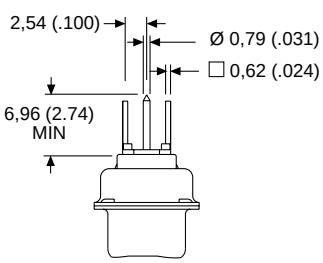


90° (X)

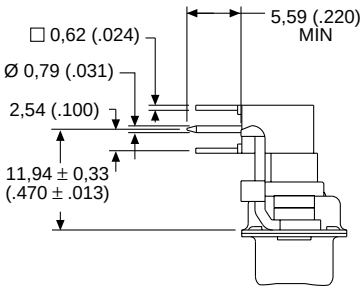

## Hardware Views (Standard)

Through Hole (Eyelet)

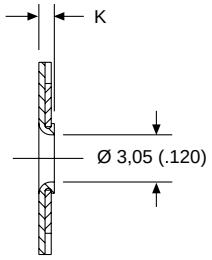


Tab Shells (K)

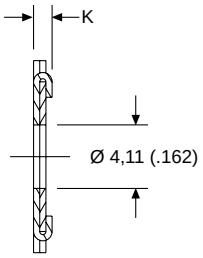


Clinch Nut (E)

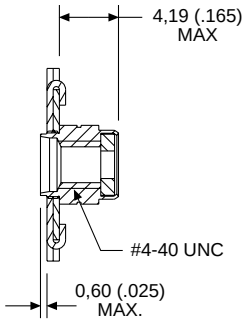


Dimensions — Plug

| Shell Size | K ±0,317 (.0125) | K ±0,25 (.010) |
|---|---|---|
| DE | 1,206 (.0475) | — |
| DA | 1,206 (.0475) | — |
| DB | — | 1,52 (.060) |
| DC | — | 1,52 (.060) |
| DD | — | 1,52 (.060) |

Dimensions — Receptacle

| Shell Size | K ±0,318 (.0125) |
|---|---|
| DE | 1,206 (.0475) |
| DA | 1,206 (.0475) |
| DB | 1,206 (.0475) |
| DC | 1,206 (.0475) |
| DD | 1,206 (.0475) |

Dual Float Mount (Y)

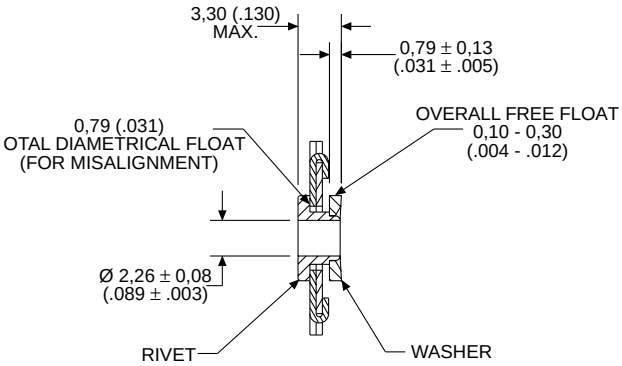


## Alternate Bracket Configuration

Supplied with connectors without boardlocks.

Dimensions

| Shell Size | R ±0,25 (.010) | S ±0,25 (.010) |
|---|---|---|
| DE, DA, DB, DC | 11,61 (.457) | 12,78 (.503) |
| DD | 12,78 (.503) | 13,95 (.549) |

Standard Footprint (P)

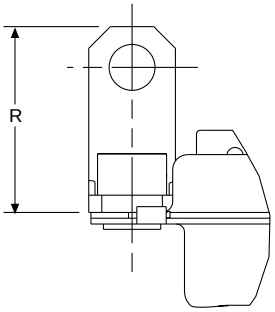


European Footprint (P)

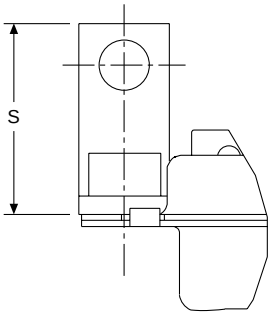






ITT Cannon

Dimensions are shown in mm (inch)
Dimensions subject to change

## Hardware Views (European)

Through Hole

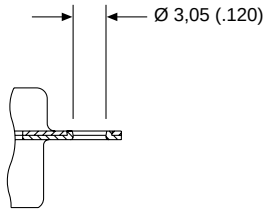


Clinch Nut (X/E)

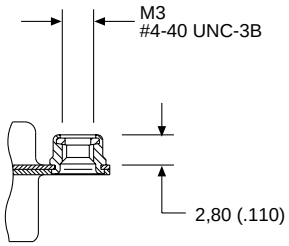


Plastic Bracket with Bushing (1A5N)

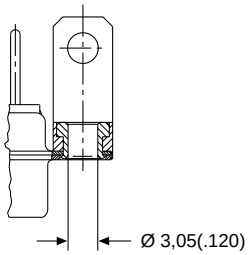


Plastic Bracket with Captive Nut (1ATN/1AVN)

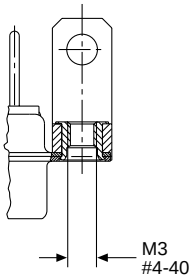


Plastic Bracket with Post (1APN/1A6N)

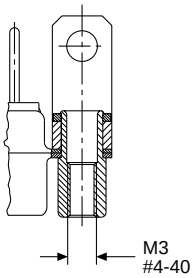


Metal Bracket with Bushing (1AFN)

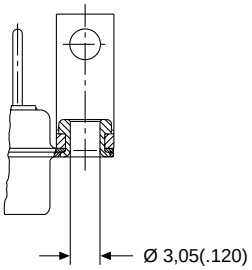


Metal Bracket with Captive Nut (1A9N/1A7N)

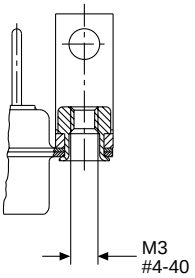


Metal Bracket with Post (1AHN/1A8N)

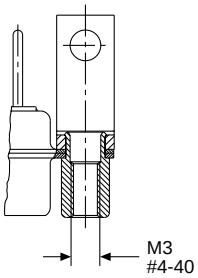






Dimensions are shown in mm (inch)
Dimensions subject to change

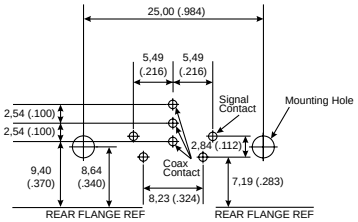


| | |
|---|---|
| Shell Size | E |
| Contact Arrangement | 5W1 |
| No. of Size 20 Cavities | 4 #20 |
| No. of Size 8 Cavities | 1 #8 |

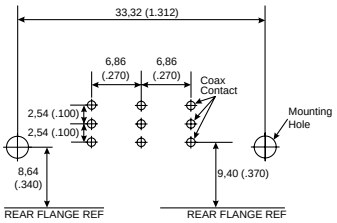


| | |
|---|---|
| Shell Size | A |
| Contact Arrangement | 3W3 |
| No. of Size 20 Cavities | 0 #20 |
| No. of Size 8 Cavities | 3 #8 |

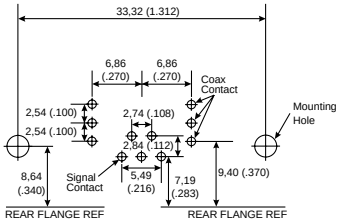


| | |
|---|---|
| Shell Size | A |
| Contact Arrangement | 7W2 |
| No. of Size 20 Cavities | 5 #20 |
| No. of Size 8 Cavities | 2 #8 |

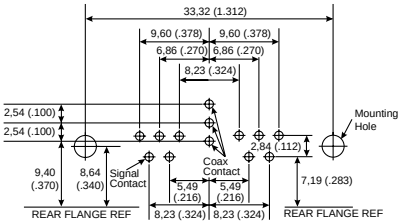


| | |
|---|---|
| Shell Size | A |
| Contact Arrangement | 11W1 |
| No. of Size 20 Cavities | 10 #20 |
| No. of Size 8 Cavities | 1 #8 |

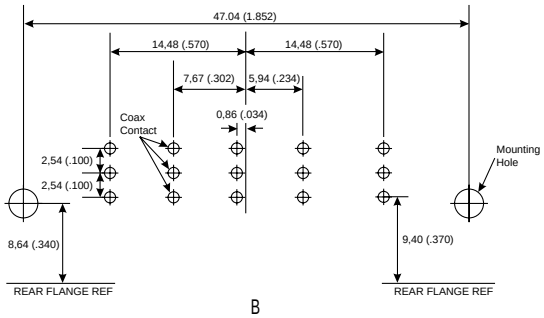


| | |
|---|---|
| Shell Size | B |
| Contact Arrangement | 5W5 |
| No. of Size 20 Cavities | 0 #20 |
| No. of Size 8 Cavities | 5 #8 |

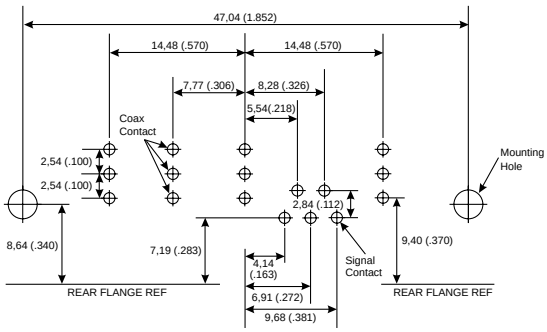


| | |
|---|---|
| Shell Size | B |
| Contact Arrangement | 9W4 |
| No. of Size 20 Cavities | 5 #20 |
| No. of Size 8 Cavities | 4 #8 |

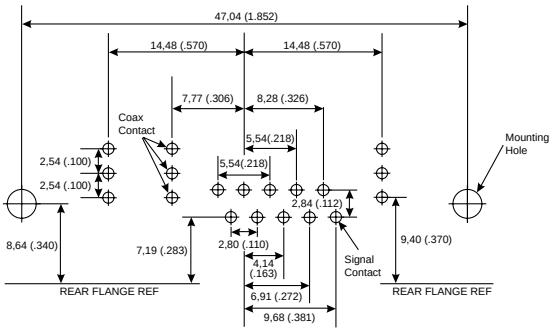


| | |
|---|---|
| Shell Size | B |
| Contact Arrangement | 13W3 |
| No. of Size 20 Cavities | 10 #20 |
| No. of Size 8 Cavities | 3 #8 |

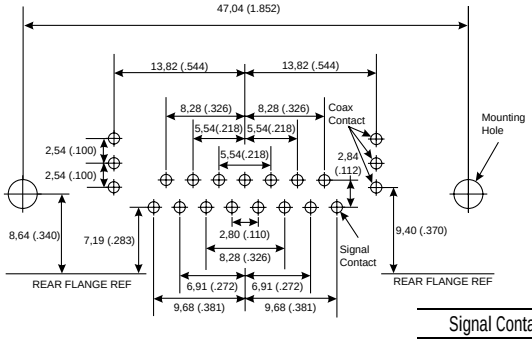


| | |
|---|---|
| Shell Size | B |
| Contact Arrangement | 17W2 |
| No. of Size 20 Cavities | 15 #20 |
| No. of Size 8 Cavities | 2 #8 |

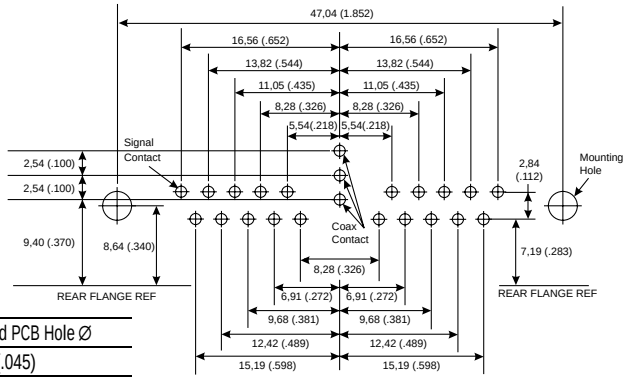


| | |
|---|---|
| Shell Size | B |
| Contact Arrangement | 21W1 |
| No. of Size 20 Cavities | 20 #20 |
| No. of Size 8 Cavities | 1 #8 |

| Signal Contact Ø | Recommended PCB Hole Ø |
|---|---|
| 0,76 (.030) | 1,14 (.045) |

| Mounting Type | Recommended PCB Hole Ø |
|---|---|
| Without Boardlock | 3,05 (.120) |
| With Boardlock | 3,10 (.122) |

| Size 8 Contact Type | Recommended PCB Hole Ø |
|---|---|
| Coaxial (C or X) | 1,14 (.045) |





ITT Cannon

Dimensions are shown in mm (inch)
Dimensions subject to change

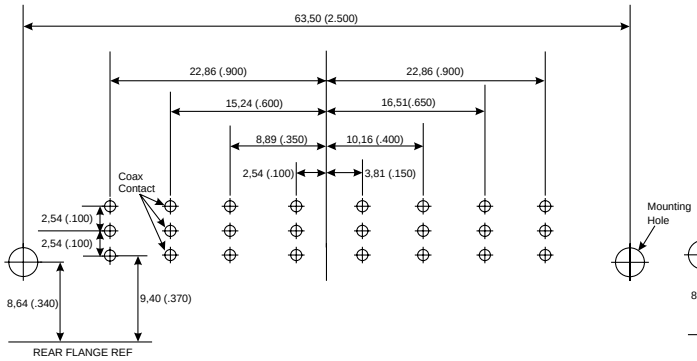


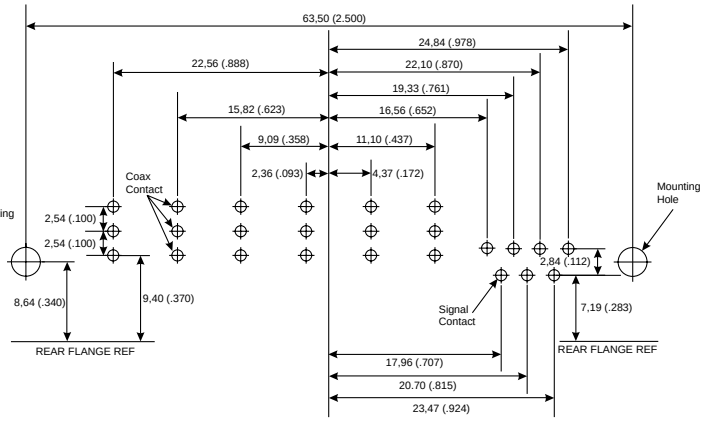


| | | |
|---|---|---|
| Shell Size | C | C |
| Contact Arrangement | 8W8 | 13W6 |
| No. of Size 20 Cavities | 0 #20 | 7 #20 |
| No. of Size 8 Cavities | 8 #8 | 6 #8 |

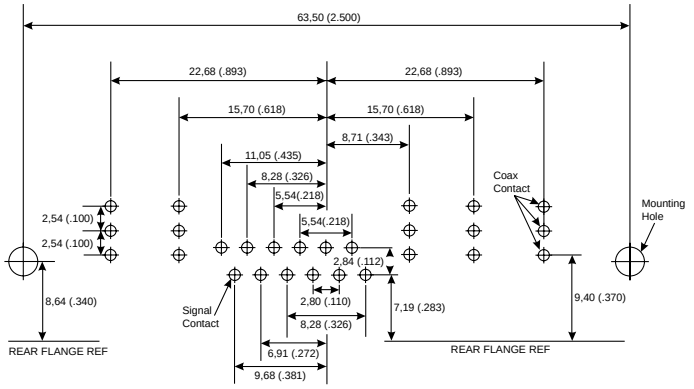


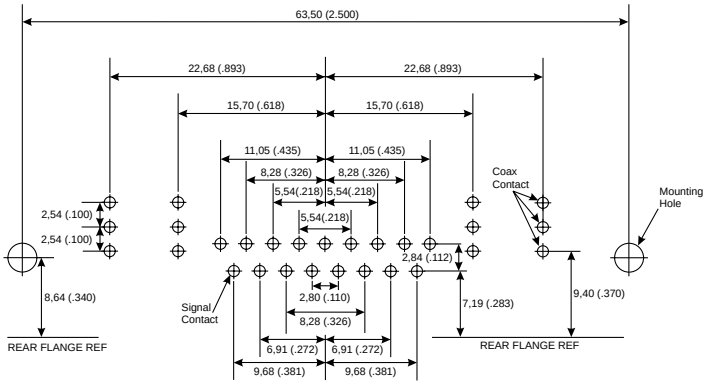


| | | |
|---|---|---|
| Shell Size | C | C |
| Contact Arrangement | 17W5 | 21WA4 |
| No. of Size 20 Cavities | 12 #20 | 17 #20 |
| No. of Size 8 Cavities | 5 #8 | 4 #8 |

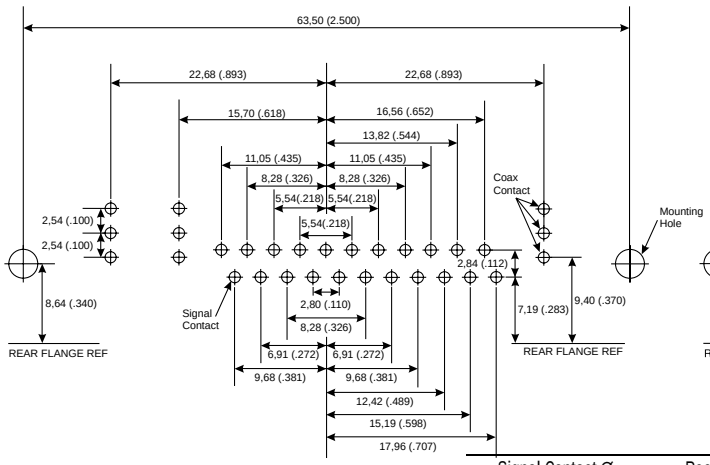


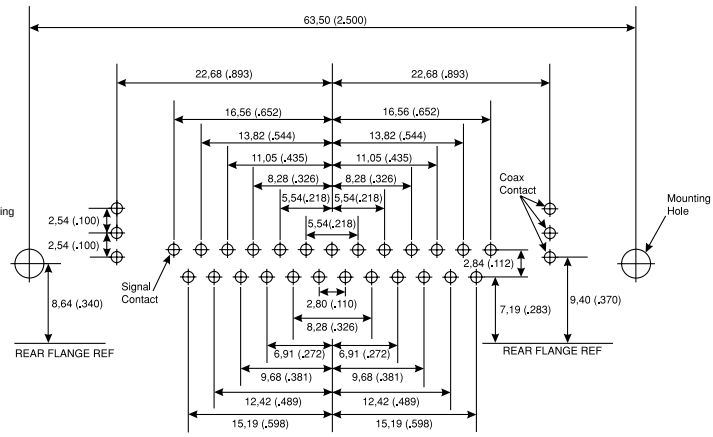


| | | |
|---|---|---|
| Shell Size | C | C |
| Contact Arrangement | 25W3 | 27W2 |
| No. of Size 20 Cavities | 22 #20 | 25 #20 |
| No. of Size 8 Cavities | 3 #8 | 2 #8 |

| Signal Contact Ø | Recommended PCB Hole Ø |
|---|---|
| 0,76 (.030) | 1,14 (.045) |

| Mounting Type | Recommended PCB Hole Ø |
|---|---|
| Without Boardlock | 3,05 (.120) |
| With Boardlock | 3,10 (.122) |

| Size 8 Contact Type | Recommended PCB Hole Ø |
|---|---|
| Coaxial (C or X) | 1,14 (.045) |

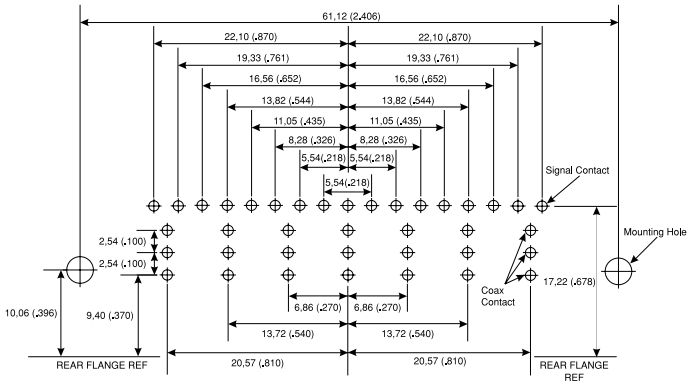


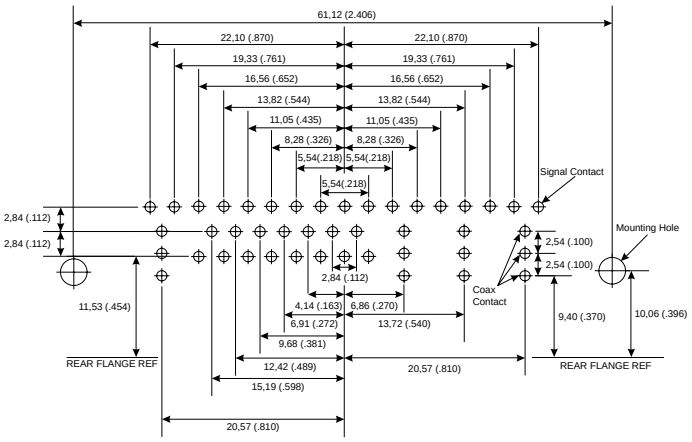


| | | |
|---|---|---|
| Shell Size | D | D |
| Contact Arrangement | 24W7 | 36W4 |
| No. of Size 20 Cavities | 17 #20 | 32 #20 |
| No. of Size 8 Cavities | 7 #8 | 4 #8 |

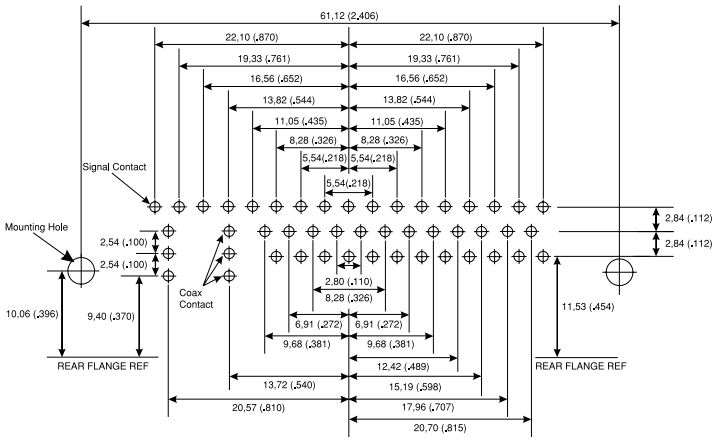


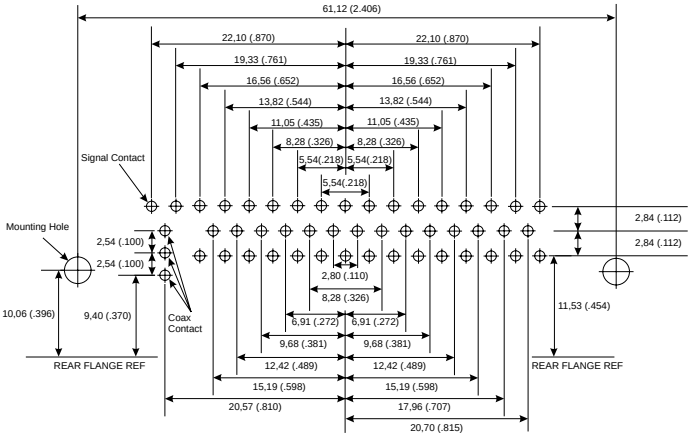


| | | |
|---|---|---|
| Shell Size | D | D |
| Contact Arrangement | 43W2 | 47W1 |
| No. of Size 20 Cavities | 41 #20 | 46 #20 |
| No. of Size 8 Cavities | 2 #20 | 1 #20 |

| Signal Contact Ø | Recommended PCB Hole Ø |
|---|---|
| 0,76 (.030) | 1,14 (.045) |

| Mounting Type | Recommended PCB Hole Ø |
|---|---|
| Without Boardlock | 3,05 (.120) |
| With Boardlock | 3,10 (.122) |

| Size 8 Contact Type | Recommended PCB Hole Ø |
|---|---|
| Coaxial (C or X) | 1,14 (.045) |







Dimensions are shown in mm (inch)
Dimensions subject to change

# PCB Hole Pattern — Standard

# Coaxial 90° — Receptacle

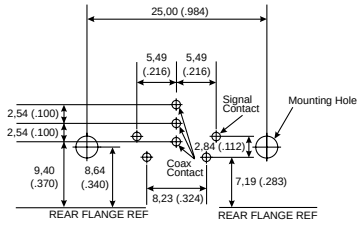


| | |
|---|---|
| Shell Size | E |
| Contact Arrangement | 5W1 |
| No. of Size 20 Cavities | 4 #20 |
| No. of Size 8 Cavities | 1 #8 |

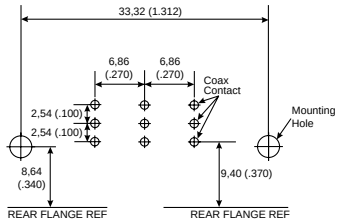


| | |
|---|---|
| Shell Size | A |
| Contact Arrangement | 3W3 |
| No. of Size 20 Cavities | 0 #20 |
| No. of Size 8 Cavities | 3 #8 |

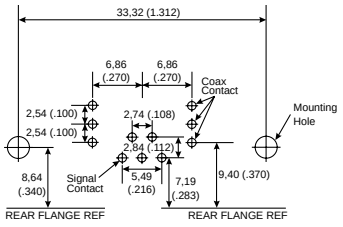


| | |
|---|---|
| Shell Size | A |
| Contact Arrangement | 7W2 |
| No. of Size 20 Cavities | 5 #20 |
| No. of Size 8 Cavities | 2 #8 |

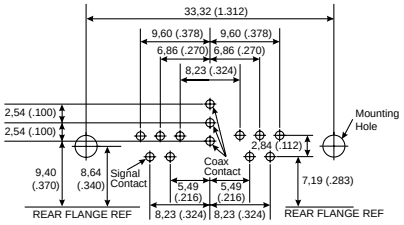


| | |
|---|---|
| Shell Size | A |
| Contact Arrangement | 11W1 |
| No. of Size 20 Cavities | 10 #20 |
| No. of Size 8 Cavities | 1 #8 |

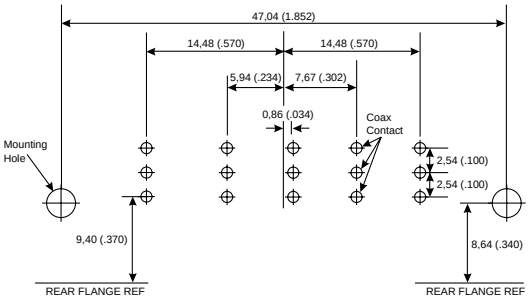


| | |
|---|---|
| Shell Size | B |
| Contact Arrangement | 5W5 |
| No. of Size 20 Cavities | 0 #20 |
| No. of Size 8 Cavities | 5 #8 |

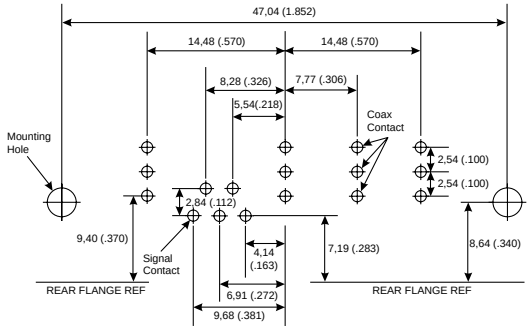


| | |
|---|---|
| Shell Size | B |
| Contact Arrangement | 9W4 |
| No. of Size 20 Cavities | 5 #20 |
| No. of Size 8 Cavities | 4 #8 |

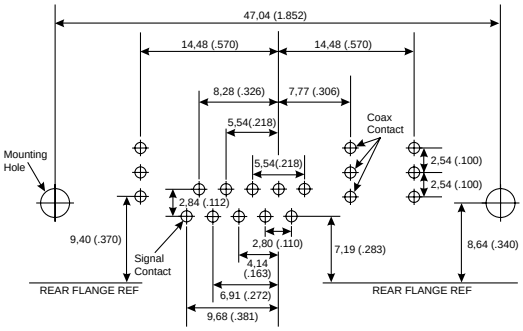


| | |
|---|---|
| Shell Size | B |
| Contact Arrangement | 13W3 |
| No. of Size 20 Cavities | 10 #20 |
| No. of Size 8 Cavities | 3 #8 |

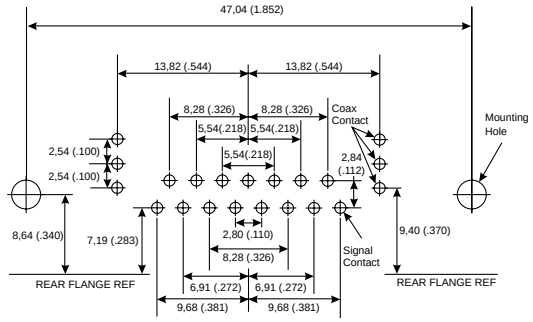


| | |
|---|---|
| Shell Size | B |
| Contact Arrangement | 17W2 |
| No. of Size 20 Cavities | 15 #20 |
| No. of Size 8 Cavities | 2 #8 |

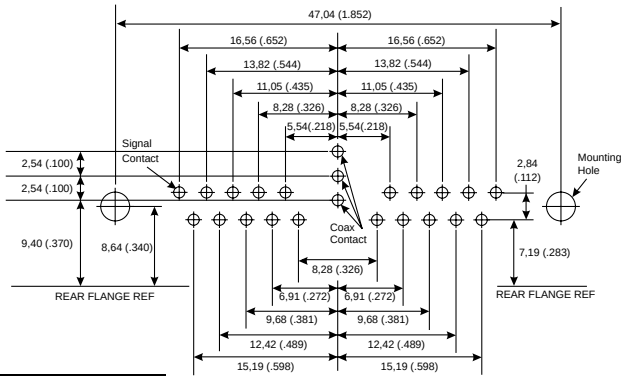


| | |
|---|---|
| Shell Size | B |
| Contact Arrangement | 21W1 |
| No. of Size 20 Cavities | 20 #20 |
| No. of Size 8 Cavities | 1 #8 |

| Signal Contact Ø | Recommended PCB Hole Ø |
|---|---|
| 0,76 (.030) | 1,14 (.045) |

| Mounting Type | Recommended PCB Hole Ø |
|---|---|
| Without Boardlock | 3,05 (.120) |
| With Boardlock | 3,10 (.122) |

| Size 8 Contact Type | Recommended PCB Hole Ø |
|---|---|
| Coaxial (C or X) | 1,14 (.045) |

Reader's Resource

ITT Cannon

Dimensions are shown in mm (inch)
Dimensions subject to change

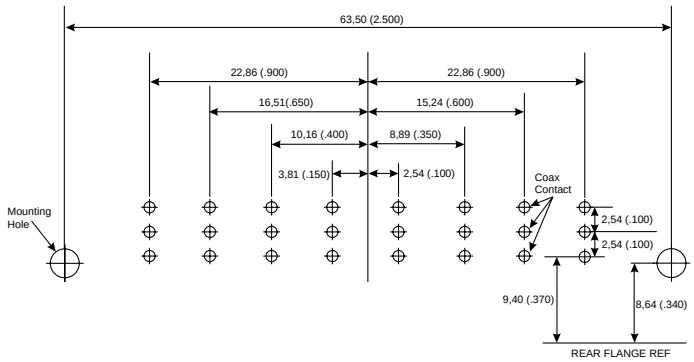


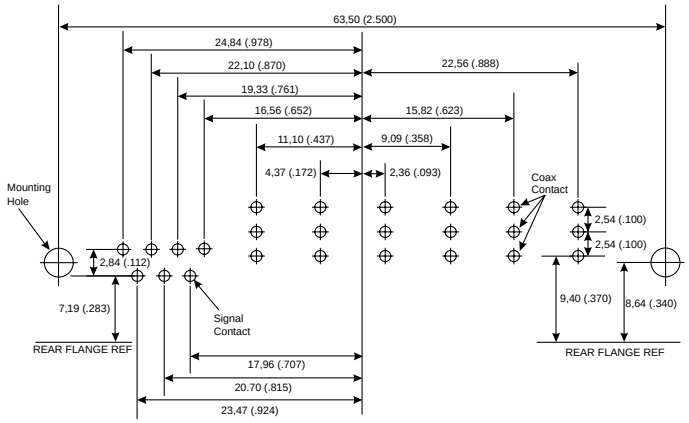


| | | |
|---|---|---|
| Shell Size | C | C |
| Contact Arrangement | 8W8 | 13W6 |
| No. of Size 20 Cavities | 0 #20 | 7 #20 |
| No. of Size 8 Cavities | 8 #8 | 6 #8 |

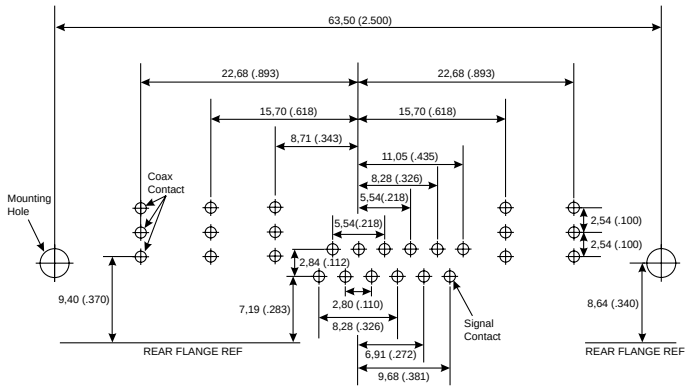


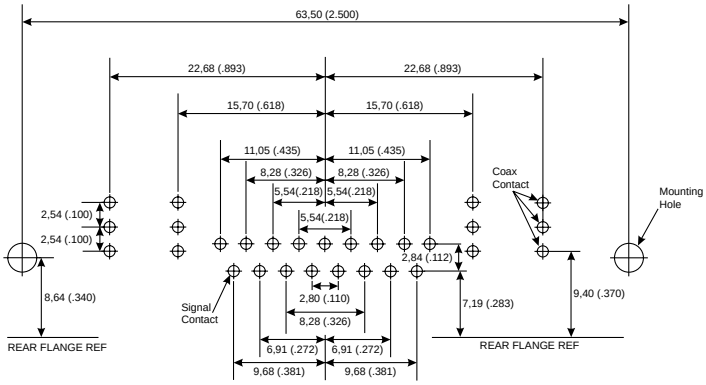


| | | |
|---|---|---|
| Shell Size | C | C |
| Contact Arrangement | 17W5 | 21WA4 |
| No. of Size 20 Cavities | 12 #20 | 17 #20 |
| No. of Size 8 Cavities | 5 #8 | 4 #8 |

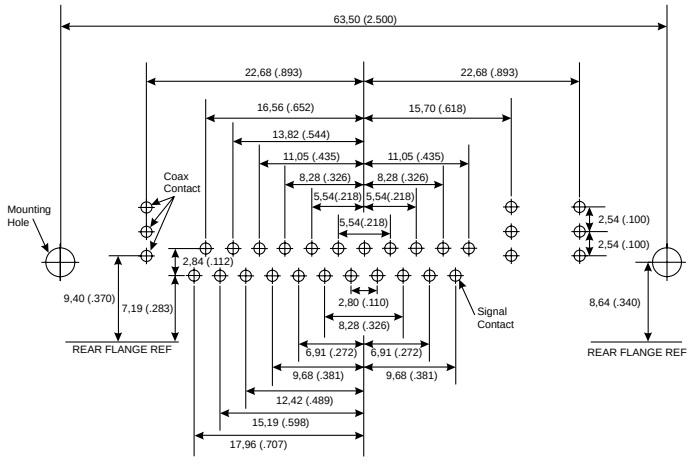


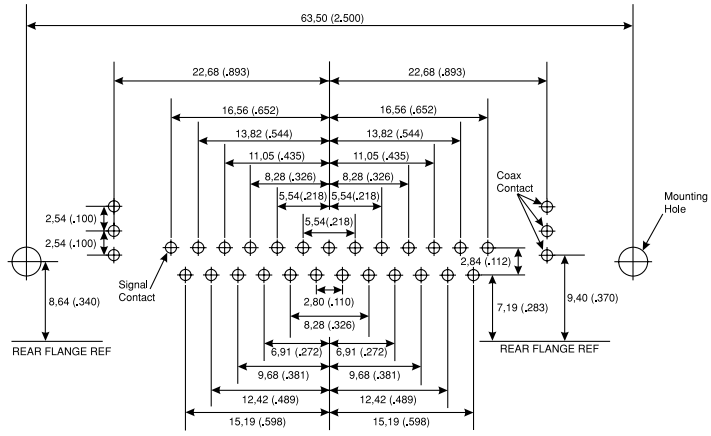


| | | |
|---|---|---|
| Shell Size | C | C |
| Contact Arrangement | 25W3 | 27W2 |
| No. of Size 20 Cavities | 22 #20 | 25 #20 |
| No. of Size 8 Cavities | 3 #8 | 2 #8 |

| Signal Contact Ø | Recommended PCB Hole Ø |
|---|---|
| 0,76 (.030) | 1,14 (.045) |

| Mounting Type | Recommended PCB Hole Ø |
|---|---|
| Without Boardlock | 3,05 (.120) |
| With Boardlock | 3,10 (.122) |

| Size 8 Contact Type | Recommended PCB Hole Ø |
|---|---|
| Coaxial (C or X) | 1,14 (.045) |







Dimensions are shown in mm (inch)
Dimensions subject to change

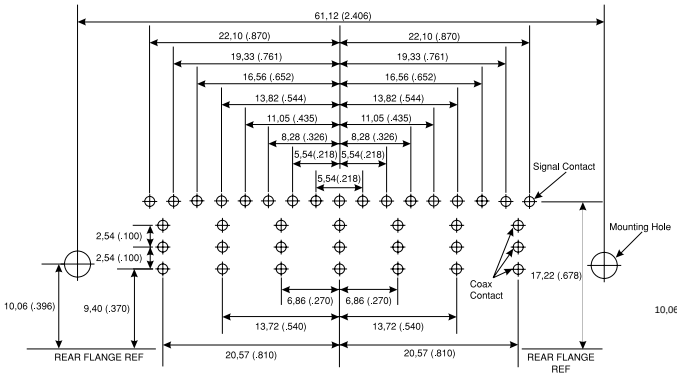


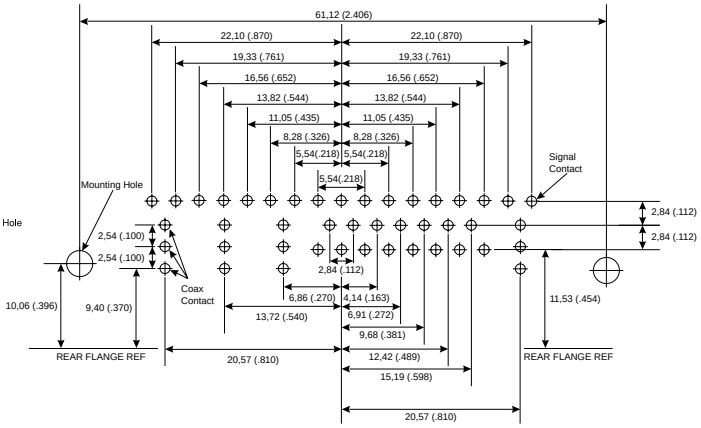


| | | |
|---|---|---|
| Shell Size | D | D |
| Contact Arrangement | 24W7 | 36W4 |
| No. of Size 20 Cavities | 17 #20 | 32 #20 |
| No. of Size 8 Cavities | 7 #8 | 4 #8 |

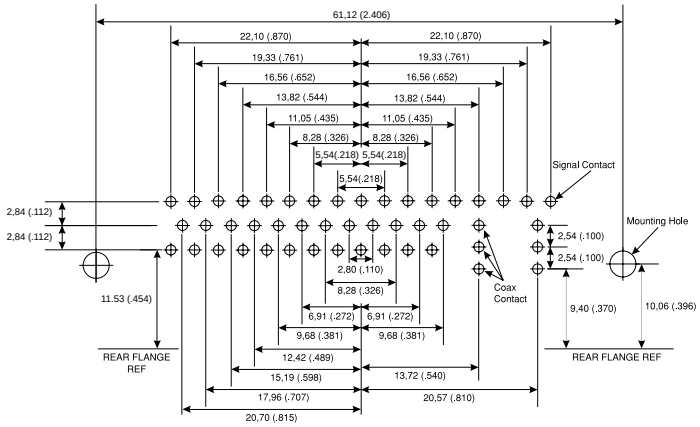


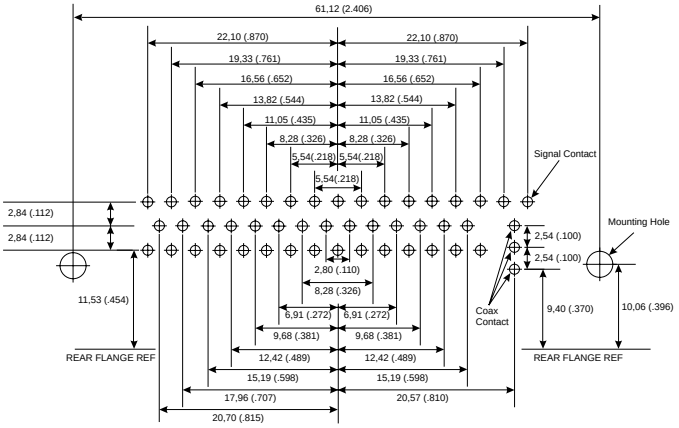


| | | |
|---|---|---|
| Shell Size | D | D |
| Contact Arrangement | 43W2 | 47W1 |
| No. of Size 20 Cavities | 41 #20 | 46 #20 |
| No. of Size 8 Cavities | 2 #8 | 1 #8 |

| Signal Contact Ø | Recommended PCB Hole Ø |
|---|---|
| 0,76 (.030) | 1,14 (.045) |

| Mounting Type | Recommended PCB Hole Ø |
|---|---|
| Without Boardlock | 3,05 (.120) |
| With Boardlock | 3,10 (.122) |

| Size 8 Contact Type | Recommended PCB Hole Ø |
|---|---|
| Coaxial (C or X) | 1,14 (.045) |

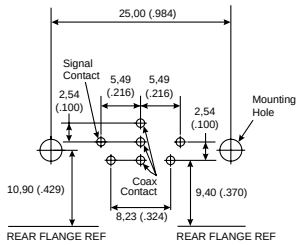


| | |
|---|---|
| Shell Size | E |
| Contact Arrangement | 5W1 |
| No. of Size 20 Cavities | 4 #20 |
| No. of Size 8 Cavities | 1 #8 |

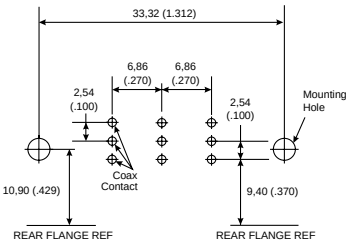


| | |
|---|---|
| Shell Size | A |
| Contact Arrangement | 3W3 |
| No. of Size 20 Cavities | 0 #20 |
| No. of Size 8 Cavities | 3 #8 |

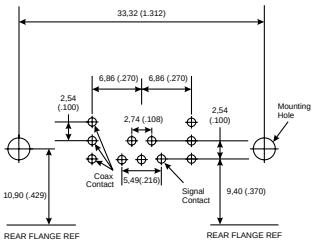


| | |
|---|---|
| Shell Size | A |
| Contact Arrangement | 7W2 |
| No. of Size 20 Cavities | 5 #20 |
| No. of Size 8 Cavities | 2 #8 |

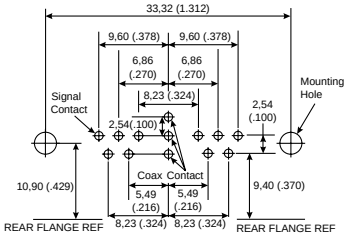


| | |
|---|---|
| Shell Size | A |
| Contact Arrangement | 11W1 |
| No. of Size 20 Cavities | 10 #20 |
| No. of Size 8 Cavities | 1 #8 |

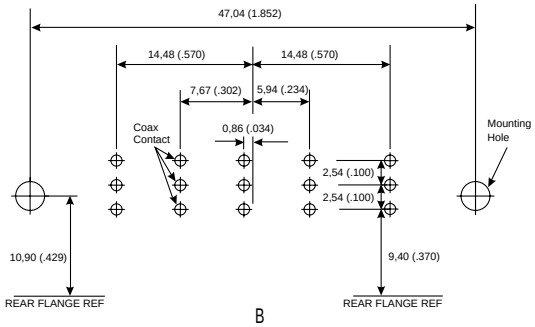


| | |
|---|---|
| Shell Size | B |
| Contact Arrangement | 5W5 |
| No. of Size 20 Cavities | 0 #20 |
| No. of Size 8 Cavities | 5 #8 |

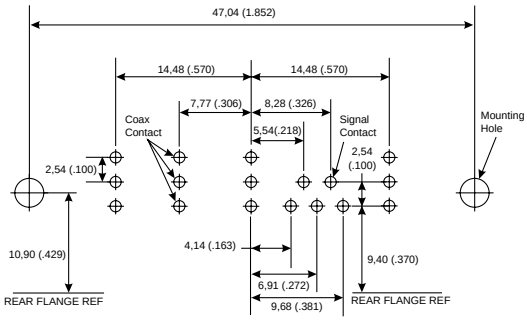


| | |
|---|---|
| Shell Size | B |
| Contact Arrangement | 9W4 |
| No. of Size 20 Cavities | 5 #20 |
| No. of Size 8 Cavities | 4 #8 |

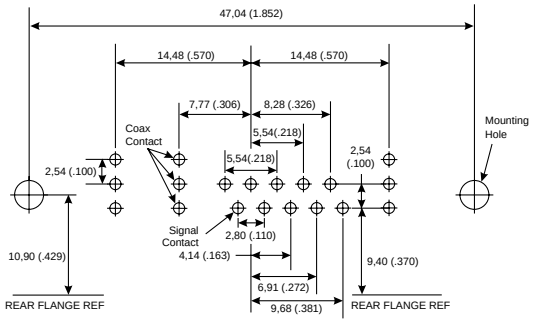


| | |
|---|---|
| Shell Size | B |
| Contact Arrangement | 13W3 |
| No. of Size 20 Cavities | 10 #20 |
| No. of Size 8 Cavities | 3 #8 |

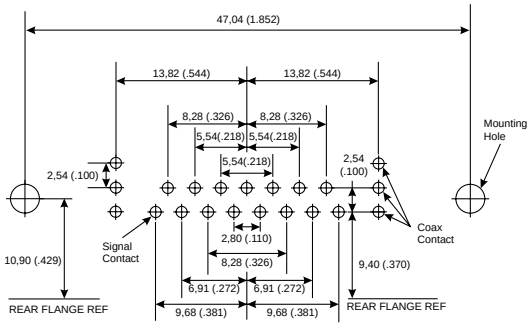


| | |
|---|---|
| Shell Size | B |
| Contact Arrangement | 17W2 |
| No. of Size 20 Cavities | 15 #20 |
| No. of Size 8 Cavities | 2 #8 |

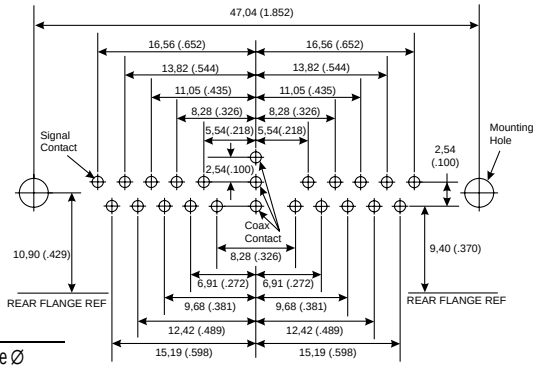


| | |
|---|---|
| Shell Size | B |
| Contact Arrangement | 21W1 |
| No. of Size 20 Cavities | 20 #20 |
| No. of Size 8 Cavities | 1 #8 |

| Signal Contact Ø | Recommended PCB Hole Ø |
|---|---|
| 0,60 (.024) | 1,00 (.039) |

| Mounting Type | Recommended PCB Hole Ø |
|---|---|
| Without Boardlock | 3,05 (.120) |
| With Boardlock | 3,10 (.122) |

| Size 8 Contact Type | Recommended PCB Hole Ø |
|---|---|
| Coaxial (C or X) | 1,14 (.045) |





ITT Cannon

Dimensions are shown in mm (inch)
Dimensions subject to change

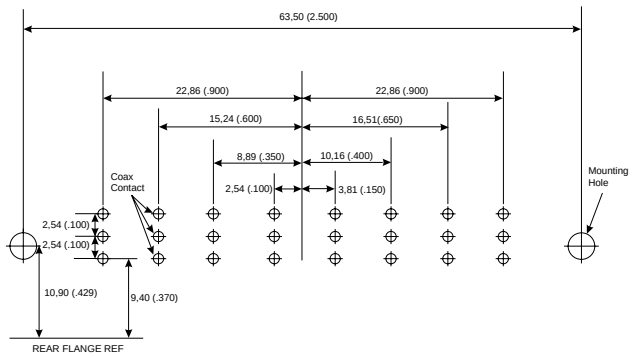


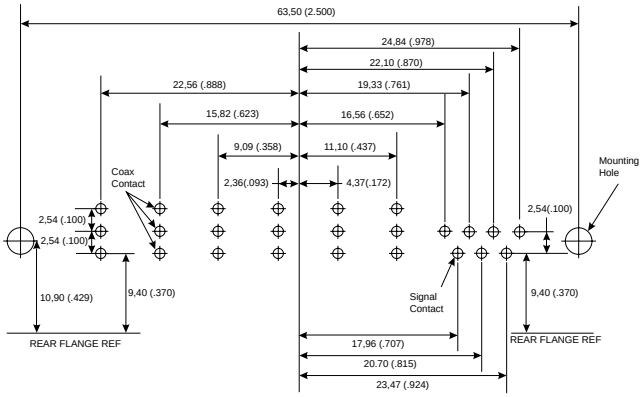


| | | |
|---|---|---|
| Shell Size | C | C |
| Contact Arrangement | 8W8 | 13W6 |
| No. of Size 20 Cavities | 0 #20 | 7 #20 |
| No. of Size 8 Cavities | 8 #8 | 6 #8 |

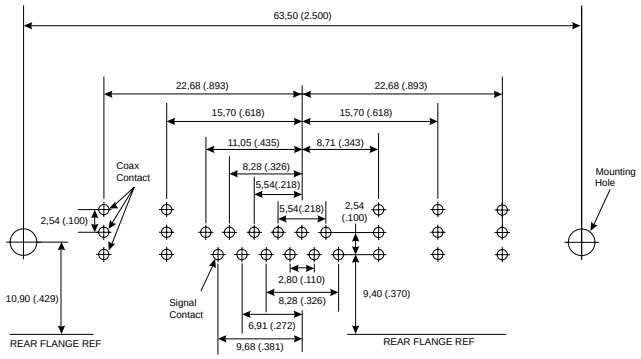


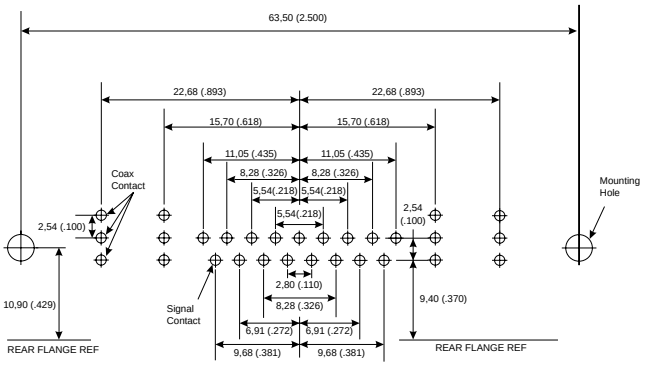


| | | |
|---|---|---|
| Shell Size | C | C |
| Contact Arrangement | 17W5 | 21WA4 |
| No. of Size 20 Cavities | 12 #20 | 17 #20 |
| No. of Size 8 Cavities | 5 #8 | 4 #8 |

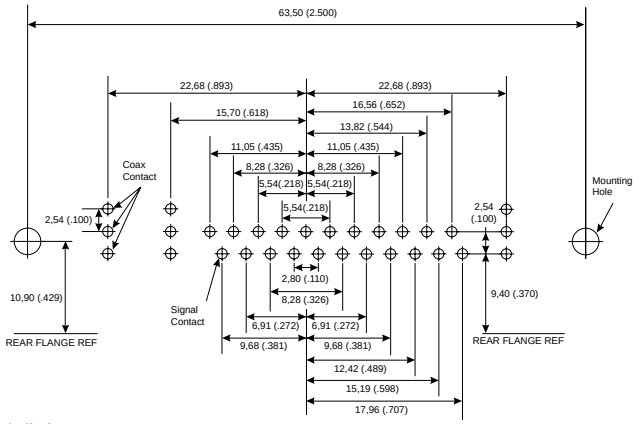


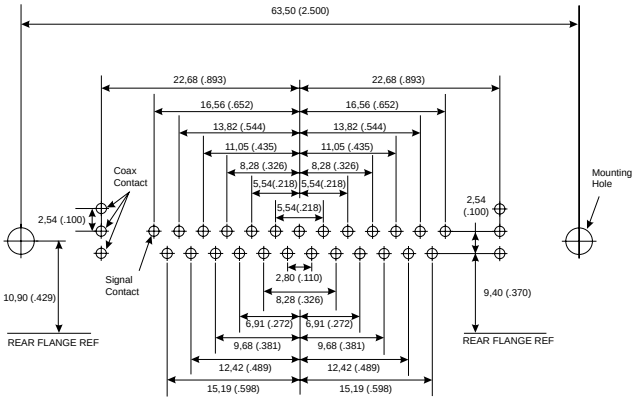


| | | |
|---|---|---|
| Shell Size | C | C |
| Contact Arrangement | 25W3 | 27W2 |
| No. of Size 20 Cavities | 22 #20 | 25 #20 |
| No. of Size 8 Cavities | 3 #8 | 2 #8 |

| Signal Contact Ø | Recommended PCB Hole Ø |
|---|---|
| 0,60 (.024) | 1,00 (.039) |

| Mounting Type | Recommended PCB Hole Ø |
|---|---|
| Without Boardlock | 3,05 (.120) |
| With Boardlock | 3,10 (.122) |

| Size 8 Contact Type | Recommended PCB Hole Ø |
|---|---|
| Coaxial (C or X) | 1,14 (.045) |

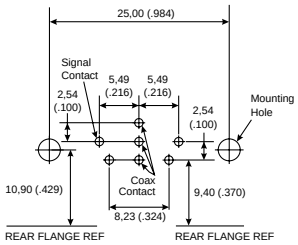


| | |
|---|---|
| Shell Size | E |
| Contact Arrangement | 5W1 |
| No. of Size 20 Cavities | 4 #20 |
| No. of Size 8 Cavities | 1 #8 |

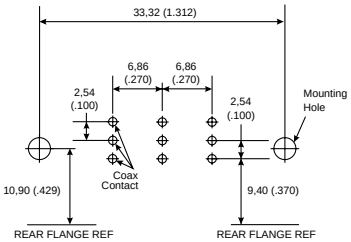


| | |
|---|---|
| Shell Size | A |
| Contact Arrangement | 3W3 |
| No. of Size 20 Cavities | 0 #20 |
| No. of Size 8 Cavities | 3 #8 |

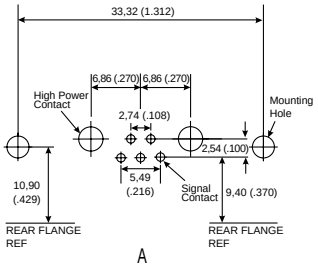


| | |
|---|---|
| Shell Size | A |
| Contact Arrangement | 7W2 |
| No. of Size 20 Cavities | 5 #20 |
| No. of Size 8 Cavities | 2 #8 |

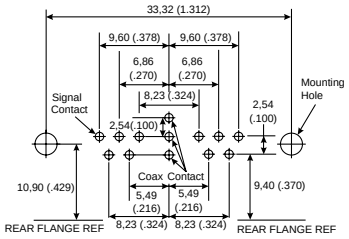


| | |
|---|---|
| Shell Size | A |
| Contact Arrangement | 11W1 |
| No. of Size 20 Cavities | 10 #20 |
| No. of Size 8 Cavities | 1 #8 |

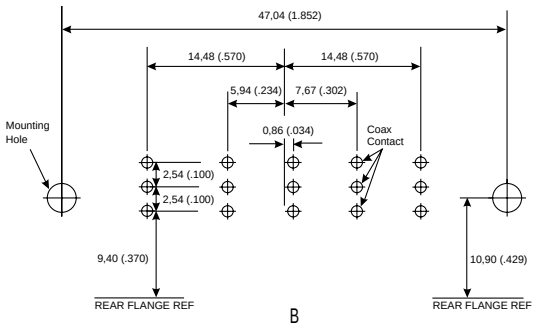


| | |
|---|---|
| Shell Size | B |
| Contact Arrangement | 5W5 |
| No. of Size 20 Cavities | 0 #20 |
| No. of Size 8 Cavities | 5 #8 |

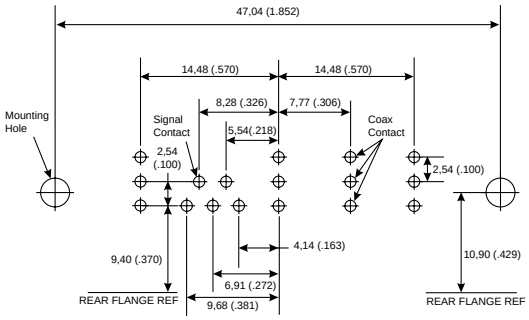


| | |
|---|---|
| Shell Size | B |
| Contact Arrangement | 9W4 |
| No. of Size 20 Cavities | 5 #20 |
| No. of Size 8 Cavities | 4 #8 |

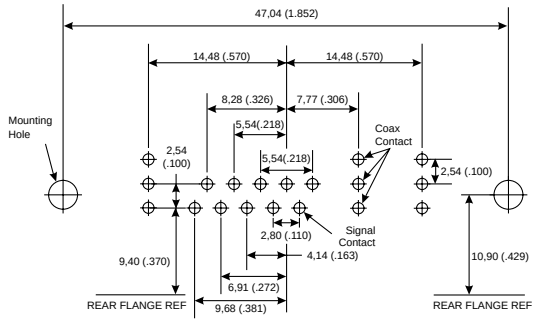


| | |
|---|---|
| Shell Size | B |
| Contact Arrangement | 13W3 |
| No. of Size 20 Cavities | 10 #20 |
| No. of Size 8 Cavities | 3 #8 |

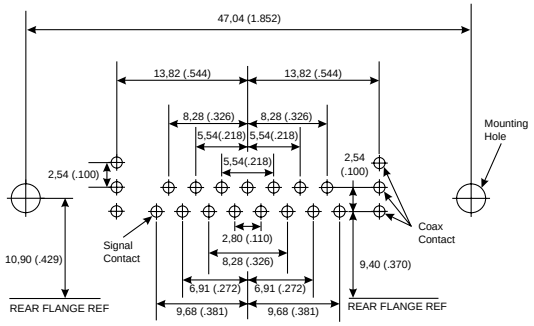


| | |
|---|---|
| Shell Size | B |
| Contact Arrangement | 17W2 |
| No. of Size 20 Cavities | 15 #20 |
| No. of Size 8 Cavities | 2 #8 |

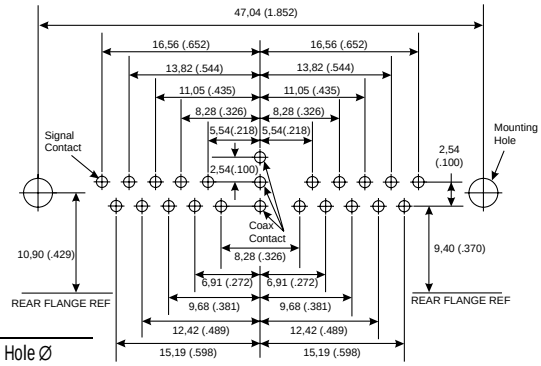


| | |
|---|---|
| Shell Size | B |
| Contact Arrangement | 21W1 |
| No. of Size 20 Cavities | 20 #20 |
| No. of Size 8 Cavities | 1 #8 |

| Signal Contact Ø | Recommended PCB Hole Ø |
|---|---|
| 0,60 (.024) | 1,00 (.039) |

| Mounting Type | Recommended PCB Hole Ø |
|---|---|
| Without Boardlock | 3,05 (.120) |
| With Boardlock | 3,10 (.122) |

| Size 8 Contact Type | Recommended PCB Hole Ø |
|---|---|
| Coaxial (C or X) | 1,14 (.045) |





ITT Cannon

Dimensions are shown in mm (inch)
Dimensions subject to change

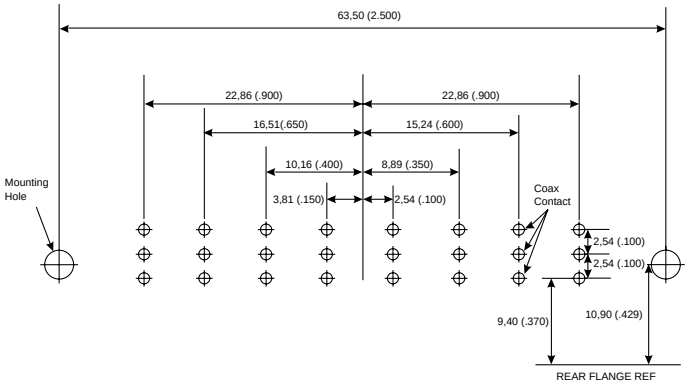


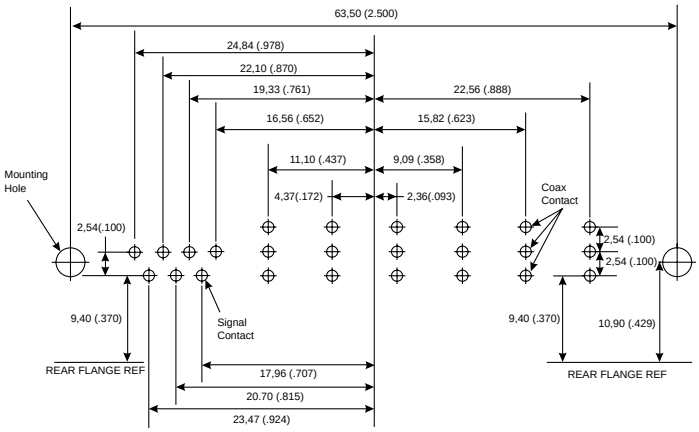


| | | |
|---|---|---|
| Shell Size | C | C |
| Contact Arrangement | 8W8 | 13W6 |
| No. of Size 20 Cavities | 0 #20 | 7 #20 |
| No. of Size 8 Cavities | 8 #8 | 6 #8 |

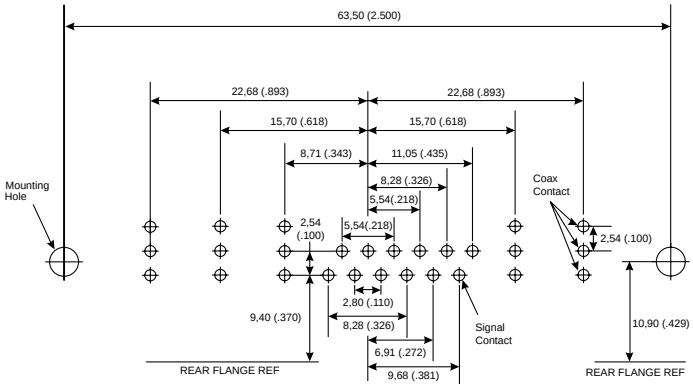


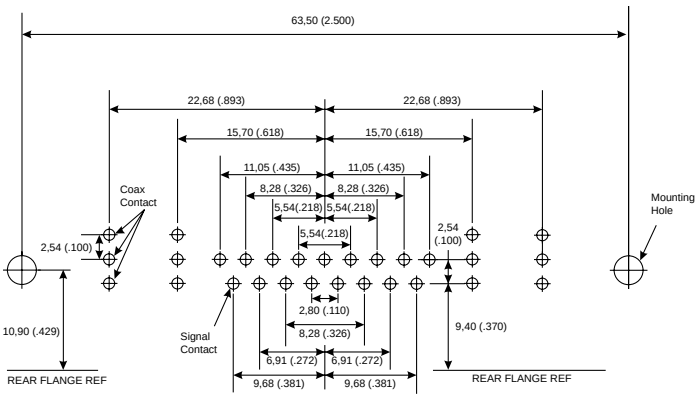


| | | |
|---|---|---|
| Shell Size | C | C |
| Contact Arrangement | 17W5 | 21WA4 |
| No. of Size 20 Cavities | 12 #20 | 17 #20 |
| No. of Size 8 Cavities | 5 #8 | 4 #8 |

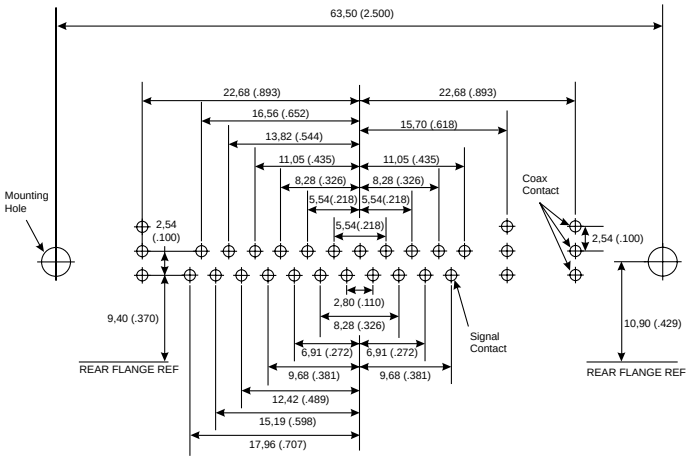


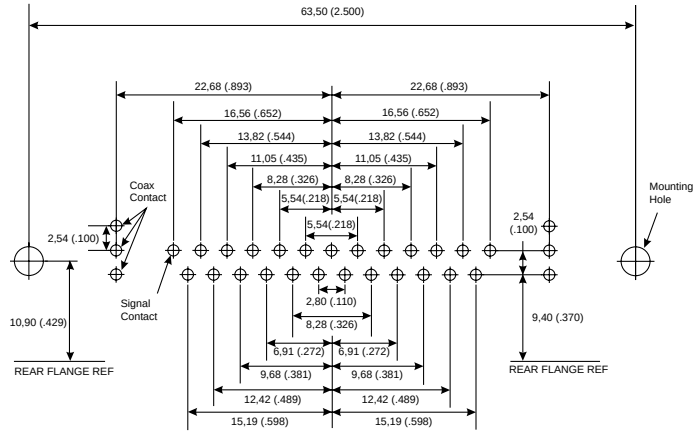


| | | |
|---|---|---|
| Shell Size | C | C |
| Contact Arrangement | 25W3 | 27W2 |
| No. of Size 20 Cavities | 22 #20 | 25 #20 |
| No. of Size 8 Cavities | 3 #8 | 2 #8 |

| Signal Contact Ø | Recommended PCB Hole Ø |
|---|---|
| 0,60 (.024) | 1,00 (.039) |

| Mounting Type | Recommended PCB Hole Ø |
|---|---|
| Without Boardlock | 3,05 (.120) |
| With Boardlock | 3,10 (.122) |

| Size 8 Contact Type | Recommended PCB Hole Ø |
|---|---|
| Coaxial (C or X) | 1,14 (.045) |

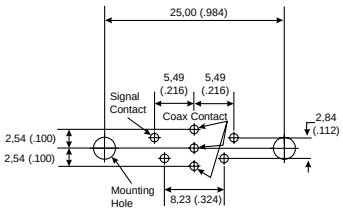


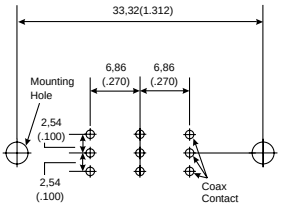


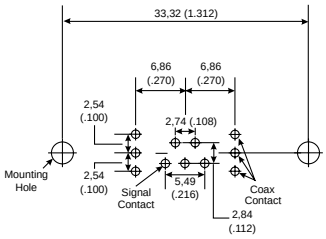


| | | | |
|---|---|---|---|
| Shell Size | E | A | A |
| Contact Arrangement | 5W1 | 3W3 | 7W2 |
| No. of Size 20 Cavities | 4 #20 | 0 #20 | 5 #20 |
| No. of Size 8 Cavities | 1 #8 | 3 #8 | 2 #8 |

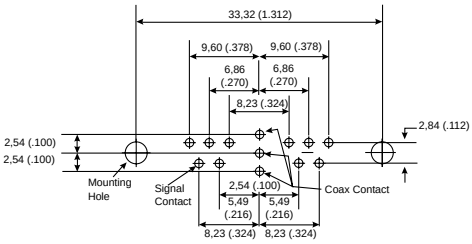


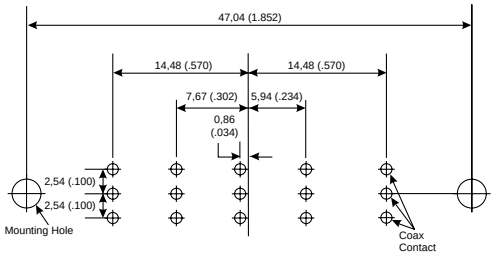


| | | |
|---|---|---|
| Shell Size | A | B |
| Contact Arrangement | 11W1 | 5W5 |
| No. of Size 20 Cavities | 10 #20 | 0 #20 |
| No. of Size 8 Cavities | 1 #8 | 5 #8 |

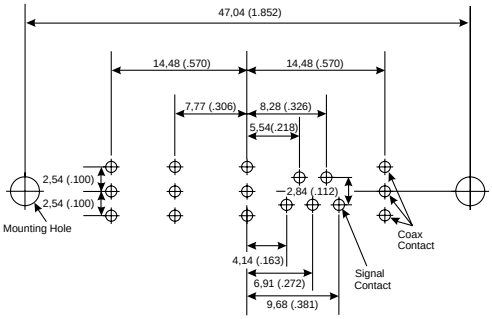


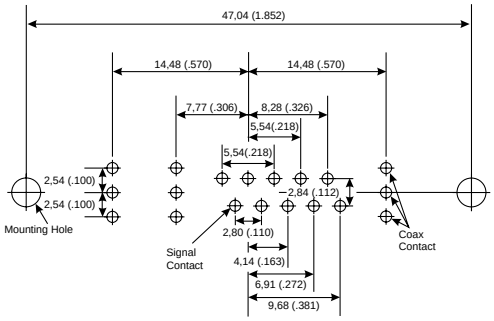


| | | |
|---|---|---|
| Shell Size | B | B |
| Contact Arrangement | 9W4 | 13W3 |
| No. of Size 20 Cavities | 5 #20 | 10 #20 |
| No. of Size 8 Cavities | 4 #8 | 3 #8 |

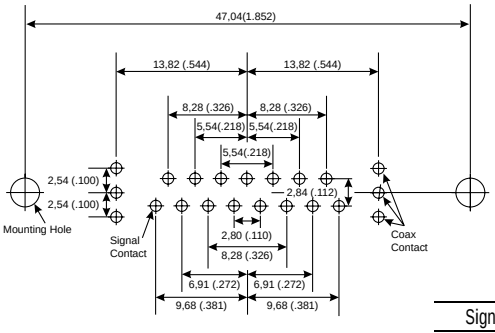


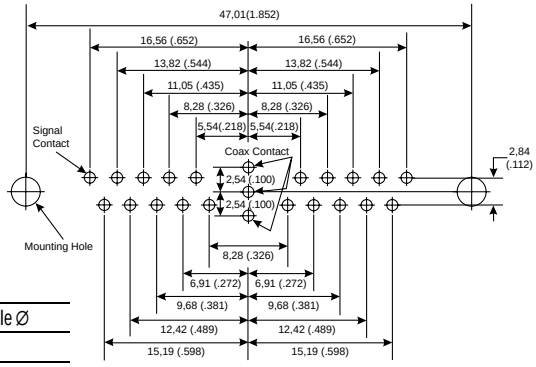


| | | |
|---|---|---|
| Shell Size | B | B |
| Contact Arrangement | 17W2 | 21W1 |
| No. of Size 20 Cavities | 15 #20 | 20 #20 |
| No. of Size 8 Cavities | 2 #8 | 1 #8 |

| Signal Contact Ø | Recommended PCB Hole Ø |
|---|---|
| 0,60 (.024) | 1,00 (.039) |
| 0,76 (.030) | 1,14 (.045) |

| Mounting Type | Recommended PCB Hole Ø |
|---|---|
| Without Boardlock | 3,05 (.120) |
| With Boardlock | 3,10 (.122) |

| Size 8 Contact Type | Recommended PCB Hole Ø |
|---|---|
| Coaxial (C or X) | 1,14 (.045) |







Dimensions are shown in mm (inch)
Dimensions subject to change

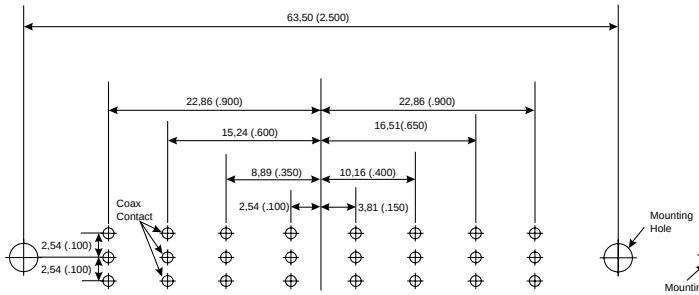


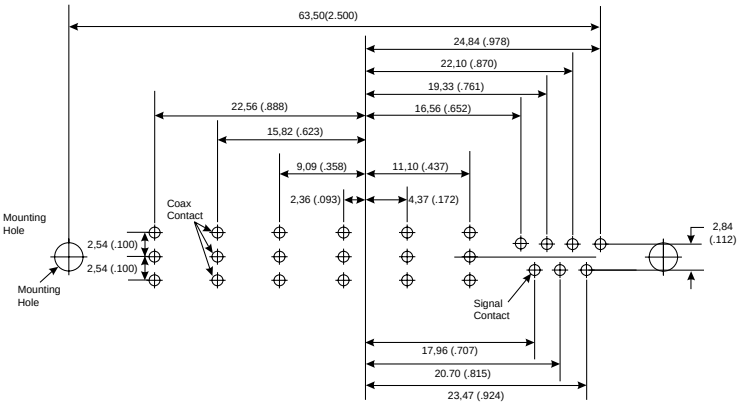


| | | |
|---|---|---|
| Shell Size | C | C |
| Contact Arrangement | 8W8 | 13W6 |
| No. of Size 20 Cavities | 0 #20 | 7 #20 |
| No. of Size 8 Cavities | 8 #8 | 6 #8 |

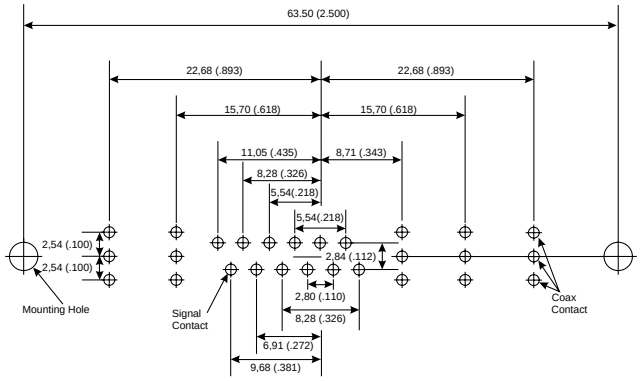


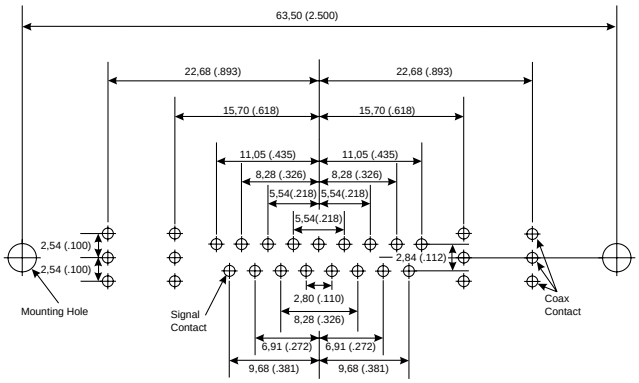


| | | |
|---|---|---|
| Shell Size | C | C |
| Contact Arrangement | 17W5 | 21WA4 |
| No. of Size 20 Cavities | 12 #20 | 17 #20 |
| No. of Size 8 Cavities | 5 #8 | 4 #8 |

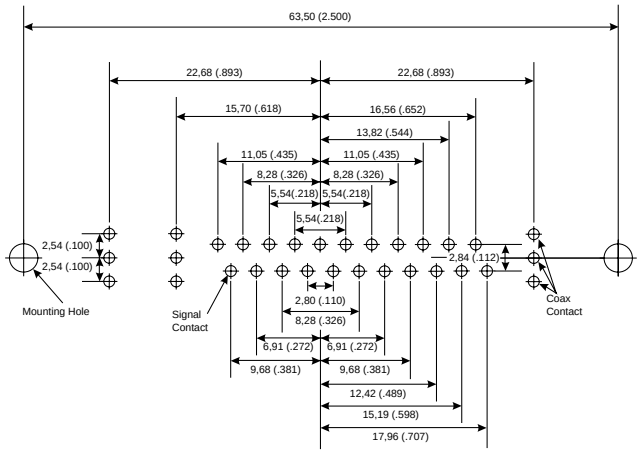


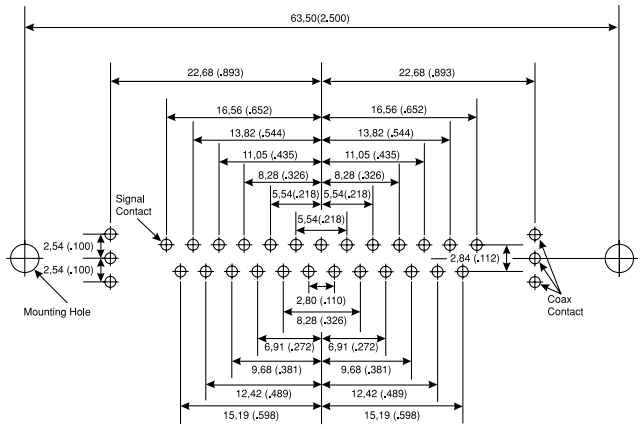


| | | |
|---|---|---|
| Shell Size | C | C |
| Contact Arrangement | 25W3 | 27W2 |
| No. of Size 20 Cavities | 22 #20 | 25 #20 |
| No. of Size 8 Cavities | 3 #8 | 2 #8 |

| Signal Contact Ø | Recommended PCB Hole Ø |
|---|---|
| 0,60 (.024) | 1,00 (.039) |
| 0,76 (.030) | 1,14 (.045) |

| Mounting Type | Recommended PCB Hole Ø |
|---|---|
| Without Boardlock | 3,05 (.120) |
| With Boardlock | 3,10 (.122) |

| Size 8 Contact Type | Recommended PCB Hole Ø |
|---|---|
| Coaxial (C or X) | 1,14 (.045) |

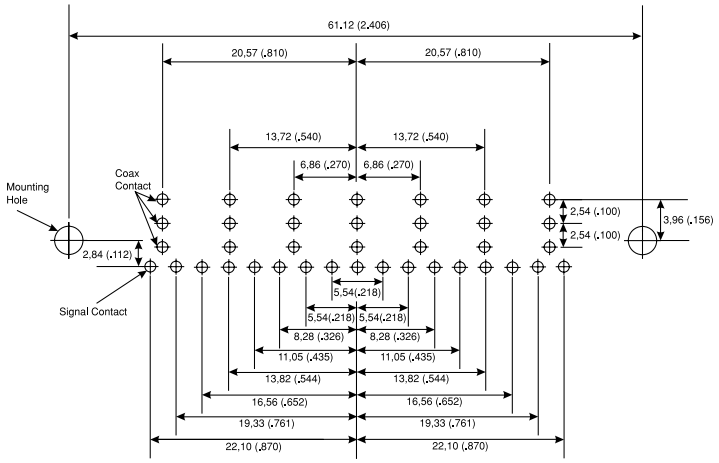


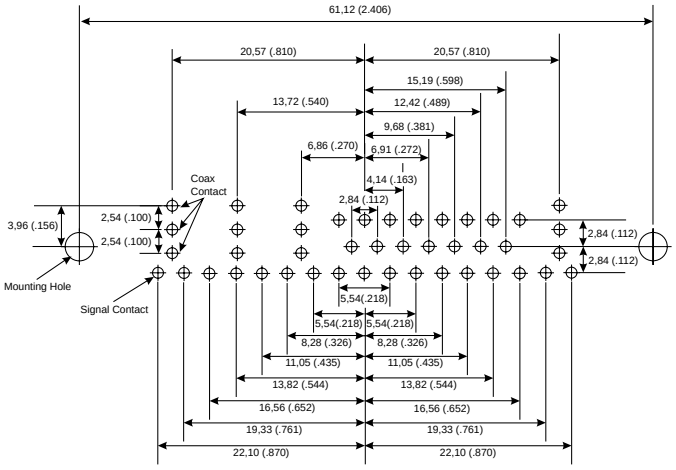


| | | |
|---|---|---|
| Shell Size | D | D |
| Contact Arrangement | 24W7 | 36W4 |
| No. of Size 20 Cavities | 17 #20 | 32 #20 |
| No. of Size 8 Cavities | 7 #8 | 4 #8 |

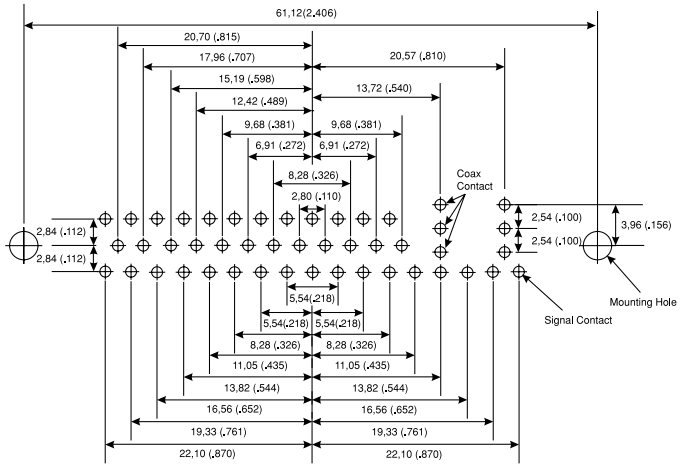


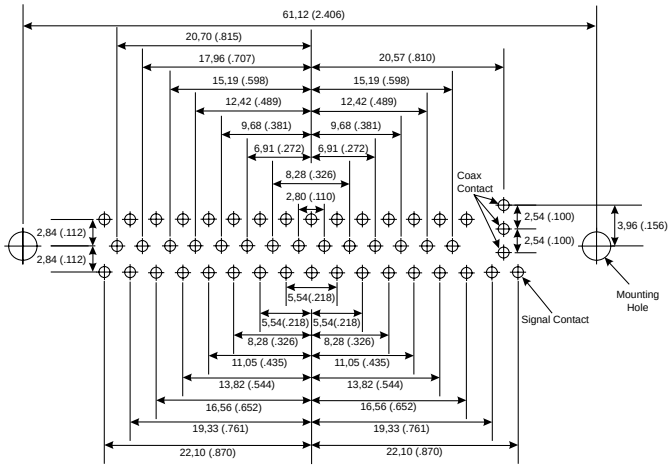


| | | |
|---|---|---|
| Shell Size | D | D |
| Contact Arrangement | 43W2 | 47W1 |
| No. of Size 20 Cavities | 41 #20 | 46 #20 |
| No. of Size 8 Cavities | 2 #8 | 1 #8 |

| Signal Contact Ø | Recommended PCB Hole Ø |
|---|---|
| 0,60 (.024) | 1,00 (.039) |
| 0,76 (.030) | 1,14 (.045) |

| Mounting Type | Recommended PCB Hole Ø |
|---|---|
| Without Boardlock | 3,05 (.120) |
| With Boardlock | 3,10 (.122) |

| Size 8 Contact Type | Recommended PCB Hole Ø |
|---|---|
| Coaxial (C or X) | 1,14 (.045) |







Dimensions are shown in mm (inch)
Dimensions subject to change

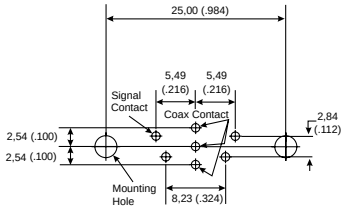


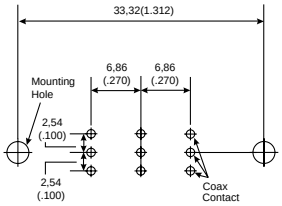


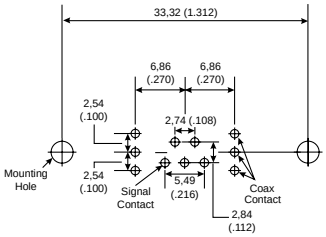


| | | | |
|---|---|---|---|
| Shell Size | E | A | A |
| Contact Arrangement | 5W1 | 3W3 | 7W2 |
| No. of Size 20 Cavities | 4 #20 | 0 #20 | 5 #20 |
| No. of Size 8 Cavities | 1 #8 | 3 #8 | 2 #8 |

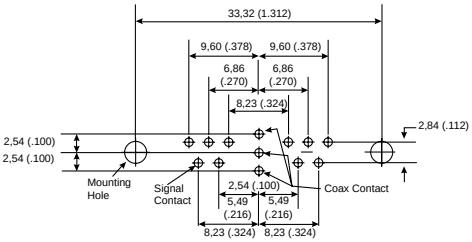


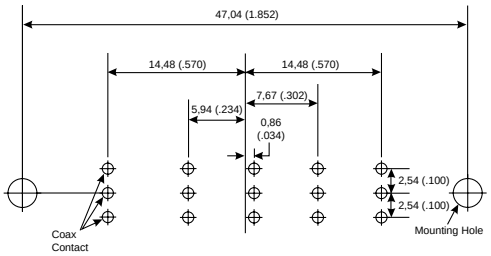


| | | |
|---|---|---|
| Shell Size | A | B |
| Contact Arrangement | 11W1 | 5W5 |
| No. of Size 20 Cavities | 10 #20 | 0 #20 |
| No. of Size 8 Cavities | 1 #8 | 5 #8 |

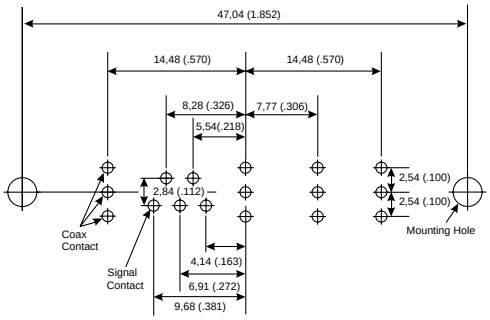


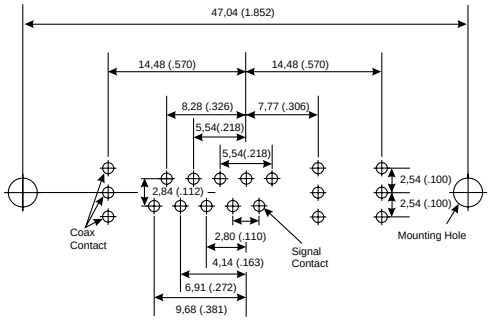


| | | |
|---|---|---|
| Shell Size | B | B |
| Contact Arrangement | 9W4 | 13W3 |
| No. of Size 20 Cavities | 5 #20 | 10 #20 |
| No. of Size 8 Cavities | 4 #8 | 3 #8 |

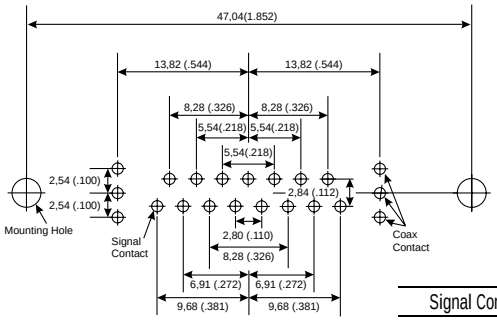


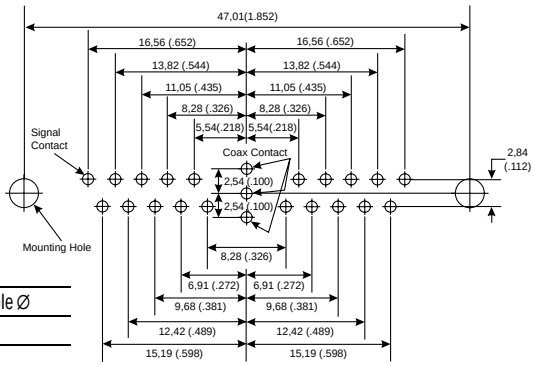


| | | |
|---|---|---|
| Shell Size | B | B |
| Contact Arrangement | 17W2 | 21W1 |
| No. of Size 20 Cavities | 15 #20 | 20 #20 |
| No. of Size 8 Cavities | 2 #8 | 1 #8 |

| Signal Contact Ø | Recommended PCB Hole Ø |
|---|---|
| 0,60 (.024) | 1,00 (.039) |
| 0,76 (.030) | 1,14 (.045) |

| Mounting Type | Recommended PCB Hole Ø |
|---|---|
| Without Boardlock | 3,05 (.120) |
| With Boardlock | 3,10 (.122) |

| Size 8 Contact Type | Recommended PCB Hole Ø |
|---|---|
| Coaxial (C or X) | 1,14 (.045) |

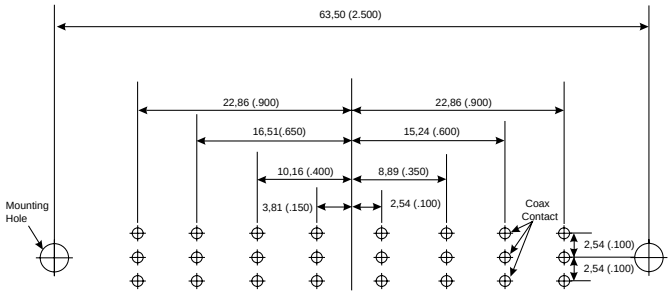


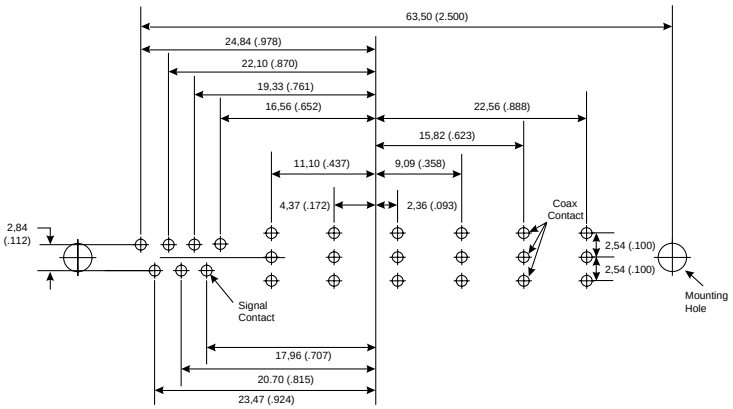


| | | |
|---|---|---|
| Shell Size | C | C |
| Contact Arrangement | 8W8 | 13W6 |
| No. of Size 20 Cavities | 0 #20 | 7 #20 |
| No. of Size 8 Cavities | 8 #8 | 6 #8 |

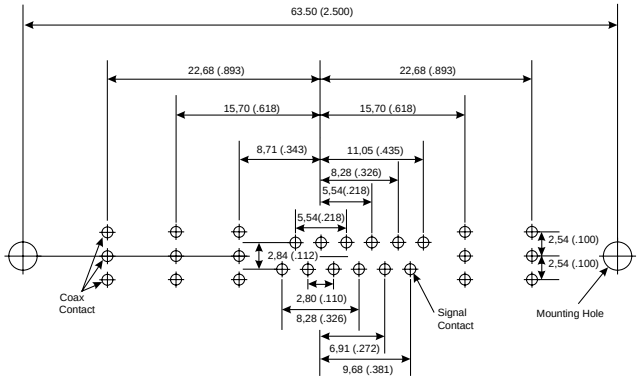


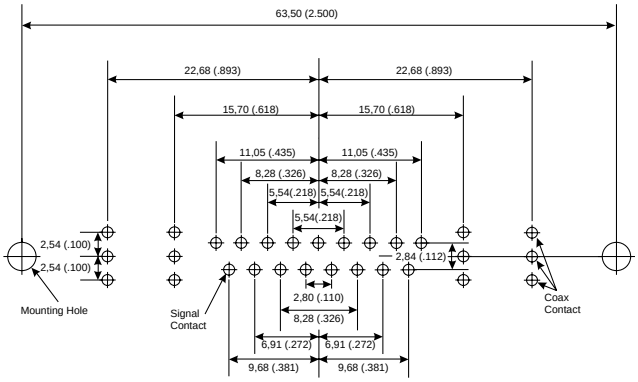


| | | |
|---|---|---|
| Shell Size | C | C |
| Contact Arrangement | 17W5 | 21WA4 |
| No. of Size 20 Cavities | 12 #20 | 17 #20 |
| No. of Size 8 Cavities | 5 #8 | 4 #8 |

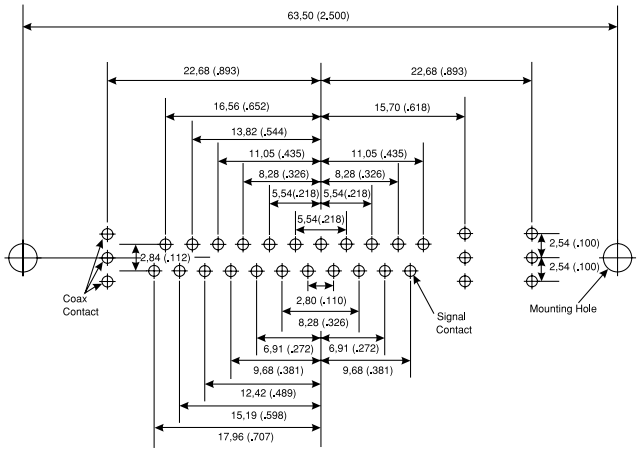


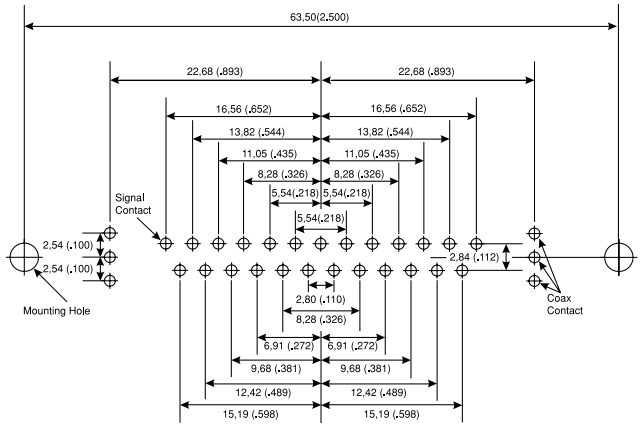


| | | |
|---|---|---|
| Shell Size | C | C |
| Contact Arrangement | 25W3 | 27W2 |
| No. of Size 20 Cavities | 22 #20 | 25 #20 |
| No. of Size 8 Cavities | 3 #8 | 2 #8 |

| Signal Contact Ø | Recommended PCB Hole Ø |
|---|---|
| 0,60 (.024) | 1,00 (.039) |
| 0,76 (.030) | 1,14 (.045) |

| Mounting Type | Recommended PCB Hole Ø |
|---|---|
| Without Boardlock | 3,05 (.120) |
| With Boardlock | 3,10 (.122) |

| Size 8 Contact Type | Recommended PCB Hole Ø |
|---|---|
| Coaxial (C or X) | 1,14 (.045) |







Dimensions are shown in mm (inch)
Dimensions subject to change

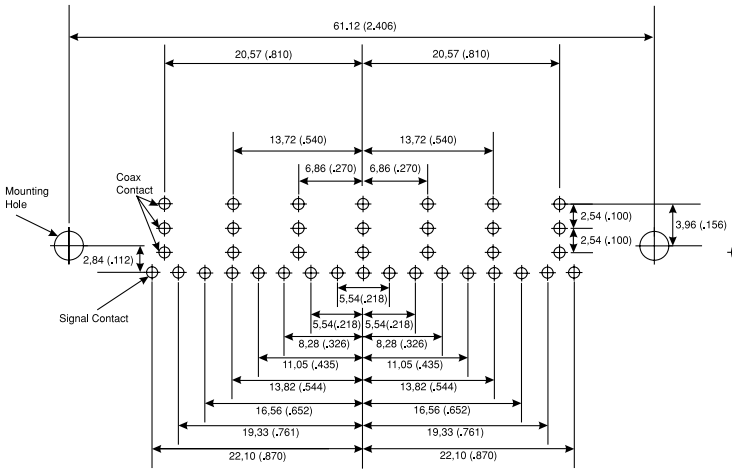


| | |
|---|---|
| Shell Size | D |
| Contact Arrangement | 24W7 |
| No. of Size 20 Cavities | 17 #20 |
| No. of Size 8 Cavities | 7 #8 |

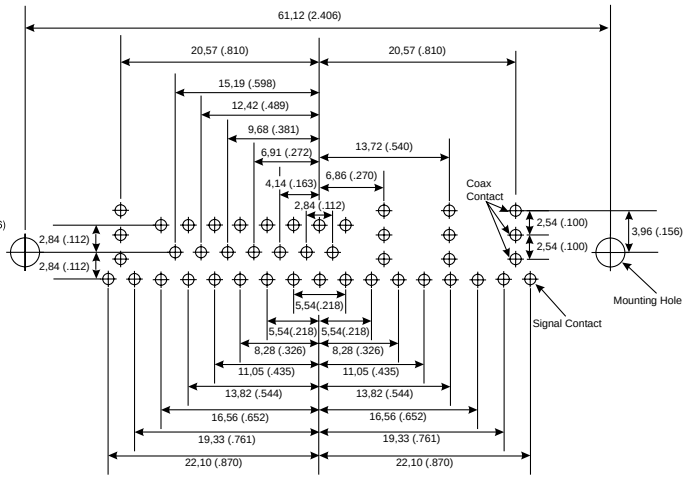


| | |
|---|---|
| D | |
| 36W4 | |
| 32 #20 | |
| 4 #8 | |

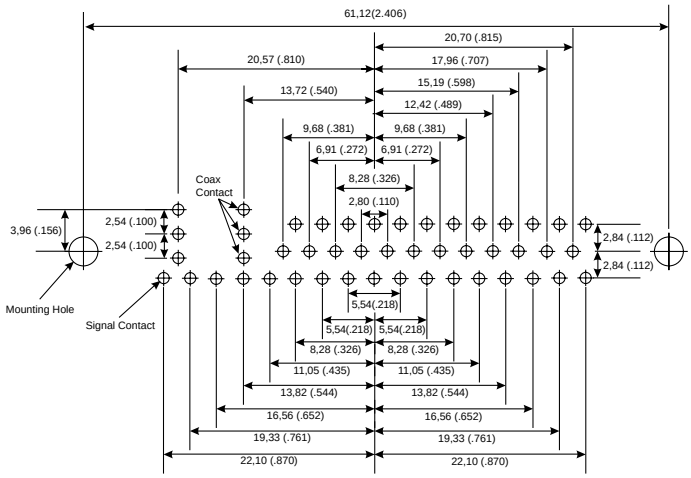


| | |
|---|---|
| Shell Size | D |
| Contact Arrangement | 43W2 |
| No. of Size 20 Cavities | 41 #20 |
| No. of Size 8 Cavities | 2 #8 |

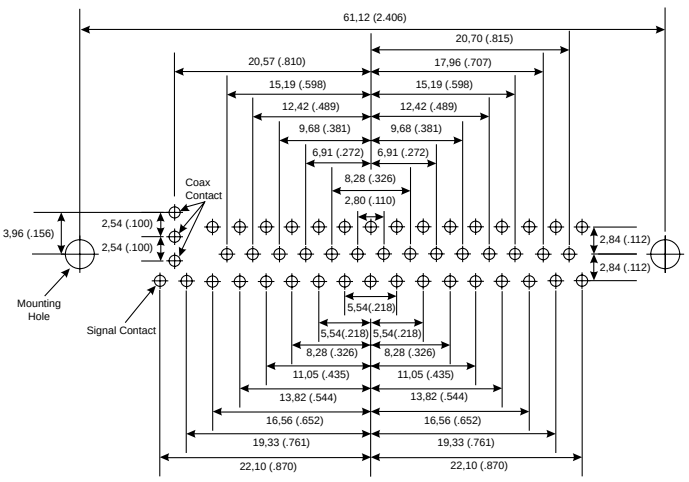


| | |
|---|---|
| D | |
| 47W1 | |
| 46 #20 | |
| 1 #8 | |

| Signal Contact Ø | Recommended PCB Hole Ø |
|---|---|
| 0,60 (.024) | 1,00 (.039) |
| 0,76 (.030) | 1,14 (.045) |

| Mounting Type | Recommended PCB Hole Ø |
|---|---|
| Without Boardlock | 3,05 (.120) |
| With Boardlock | 3,10 (.122) |

| Size 8 Contact Type | Recommended PCB Hole Ø |
|---|---|
| Coaxial (C or X) | 1,14 (.045) |

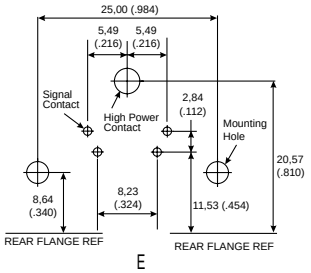


| | |
|---|---|
| Shell Size | E |
| Contact Arrangement | 5W1 |
| No. of Size 20 Cavities | 4 #20 |
| No. of Size 8 Cavities | 1 #8 |

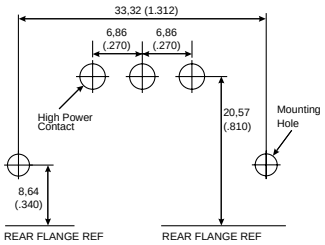


| | |
|---|---|
| Shell Size | A |
| Contact Arrangement | 3W3 |
| No. of Size 20 Cavities | 0 #20 |
| No. of Size 8 Cavities | 3 #8 |

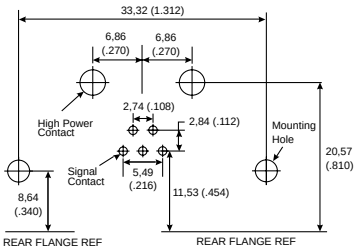


| | |
|---|---|
| Shell Size | A |
| Contact Arrangement | 7W2 |
| No. of Size 20 Cavities | 5 #20 |
| No. of Size 8 Cavities | 2 #8 |

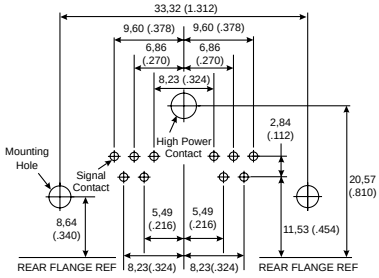


| | |
|---|---|
| Shell Size | A |
| Contact Arrangement | 11W1 |
| No. of Size 20 Cavities | 10 #20 |
| No. of Size 8 Cavities | 1 #8 |

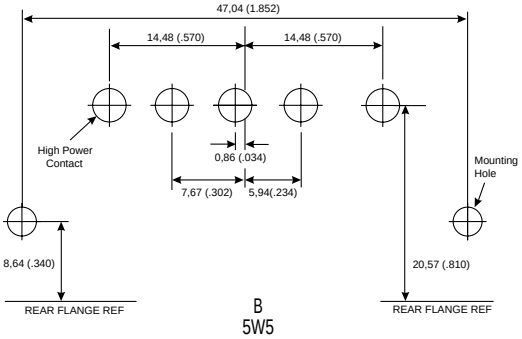


| | |
|---|---|
| Shell Size | B |
| Contact Arrangement | 5W5 |
| No. of Size 20 Cavities | 0 #20 |
| No. of Size 8 Cavities | 5 #8 |

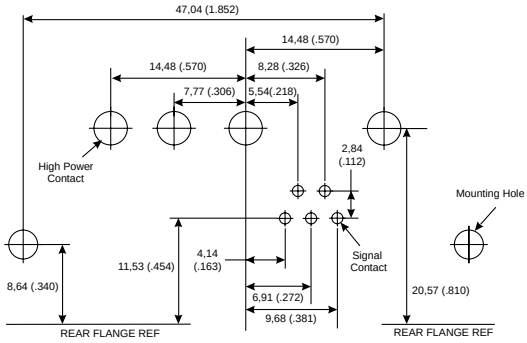


| | |
|---|---|
| Shell Size | B |
| Contact Arrangement | 9W4 |
| No. of Size 20 Cavities | 5 #20 |
| No. of Size 8 Cavities | 4 #8 |

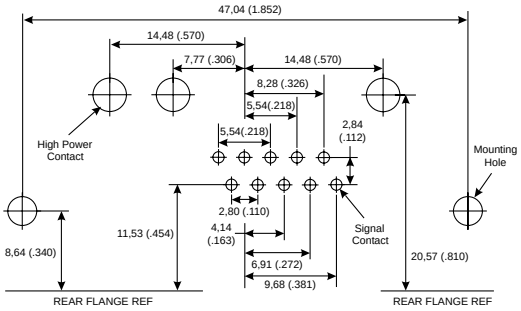


| | |
|---|---|
| Shell Size | B |
| Contact Arrangement | 13W3 |
| No. of Size 20 Cavities | 10 #20 |
| No. of Size 8 Cavities | 3 #8 |

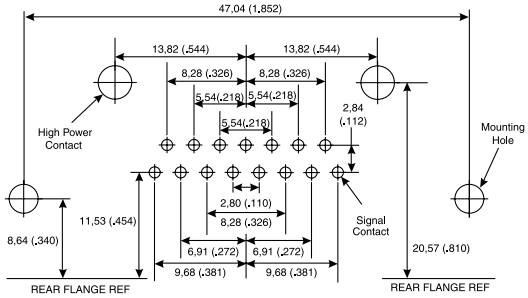


| | |
|---|---|
| Shell Size | B |
| Contact Arrangement | 17W2 |
| No. of Size 20 Cavities | 15 #20 |
| No. of Size 8 Cavities | 2 #8 |

| Signal Contact Ø | Recommended PCB Hole Ø |
|---|---|
| 0,76 (.030) | 1,14 (.045) |

| Mounting Type | Recommended PCB Hole Ø |
|---|---|
| Without Boardlock | 3,05 (.120) |
| With Boardlock | 3,10 (.122) |

| Size 8 Contact Type | Recommended PCB Hole Ø |
|---|---|
| High Power (H) | 3,56 (.140) |

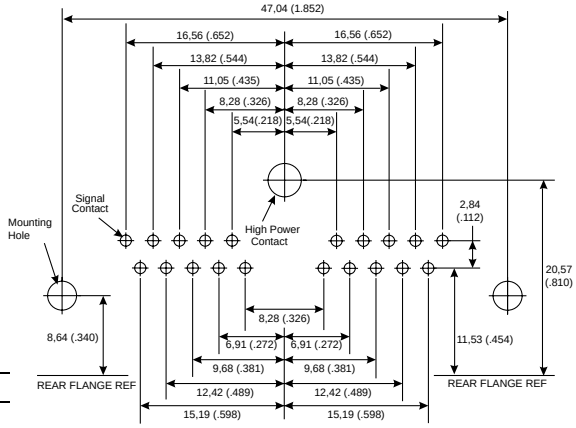


| | |
|---|---|
| Shell Size | B |
| Contact Arrangement | 21W1 |
| No. of Size 20 Cavities | 20 #20 |
| No. of Size 8 Cavities | 1 #8 |







Dimensions are shown in mm (inch)
Dimensions subject to change

# High Power 90° — Plug

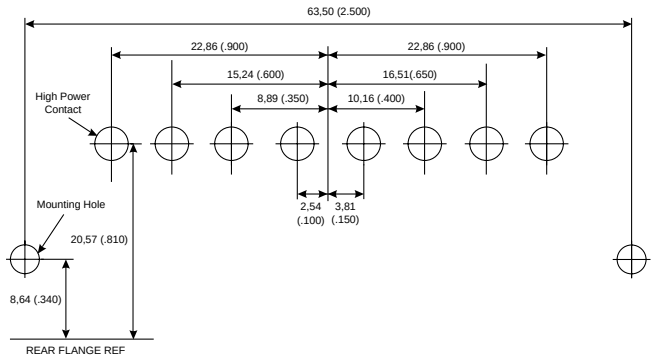


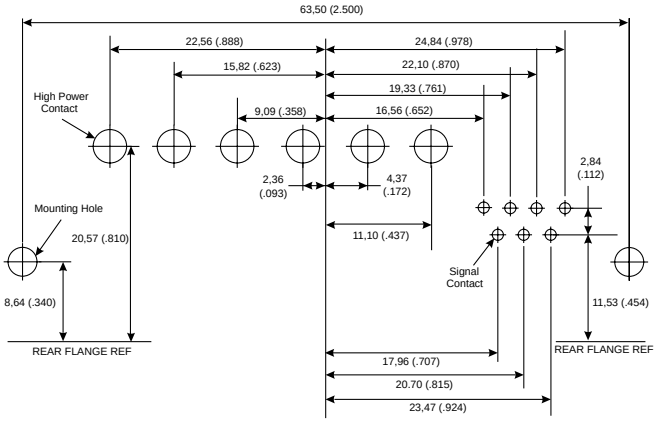


| | | |
|---|---|---|
| Shell Size | C | C |
| Contact Arrangement | 8W8 | 13W6 |
| No. of Size 20 Cavities | 0 #20 | 7 #20 |
| No. of Size 8 Cavities | 8 #8 | 6 #8 |

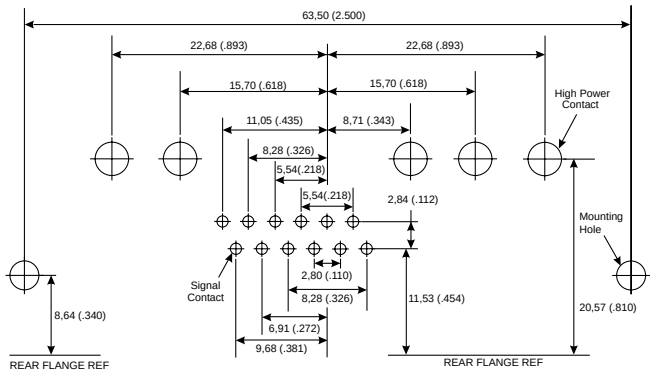


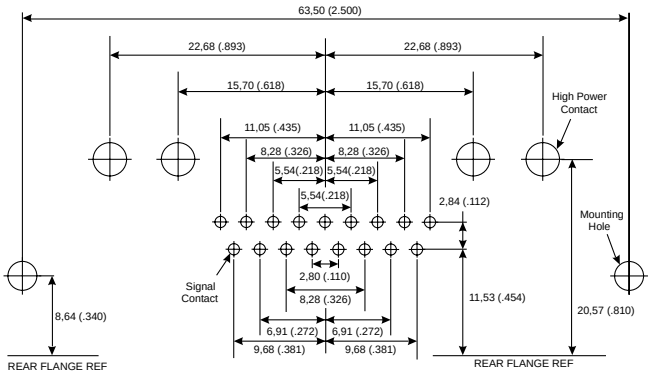


| | | |
|---|---|---|
| Shell Size | C | C |
| Contact Arrangement | 17W5 | 21WA4 |
| No. of Size 20 Cavities | 12 #20 | 17 #20 |
| No. of Size 8 Cavities | 5 #8 | 4 #8 |

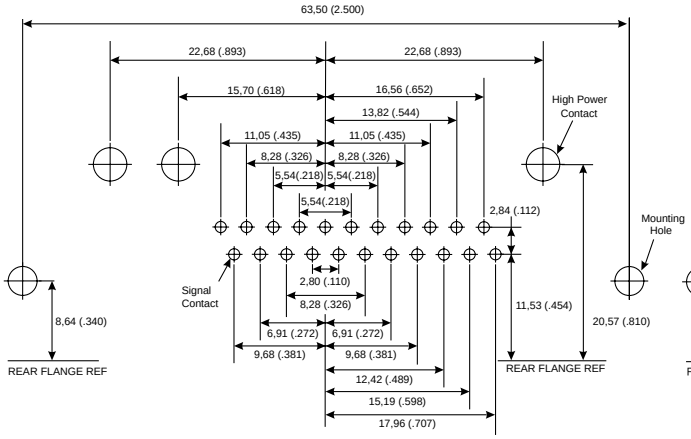


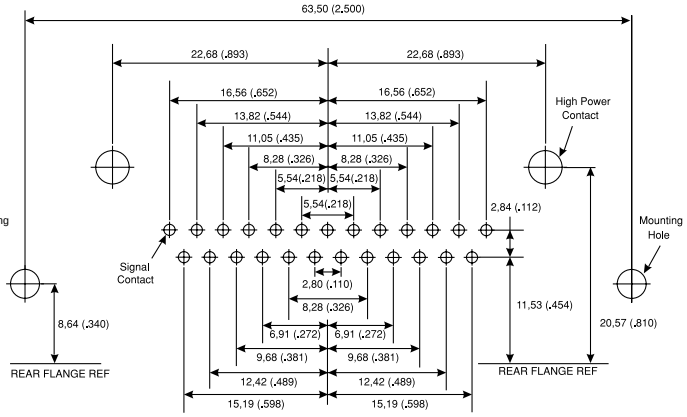


| | | |
|---|---|---|
| Shell Size | C | C |
| Contact Arrangement | 25W3 | 27W2 |
| No. of Size 20 Cavities | 22 #20 | 25 #20 |
| No. of Size 8 Cavities | 3 #8 | 2 #8 |

| Signal Contact Ø | Recommended PCB Hole Ø |
|---|---|
| 0,76 (.030) | 1,14 (.045) |

| Mounting Type | Recommended PCB Hole Ø |
|---|---|
| Without Boardlock | 3,05 (.120) |
| With Boardlock | 3,10 (.122) |

| Size 8 Contact Type | Recommended PCB Hole Ø |
|---|---|
| High Power (H) | 3,56 (.140) |

# High Power 90° — Plug

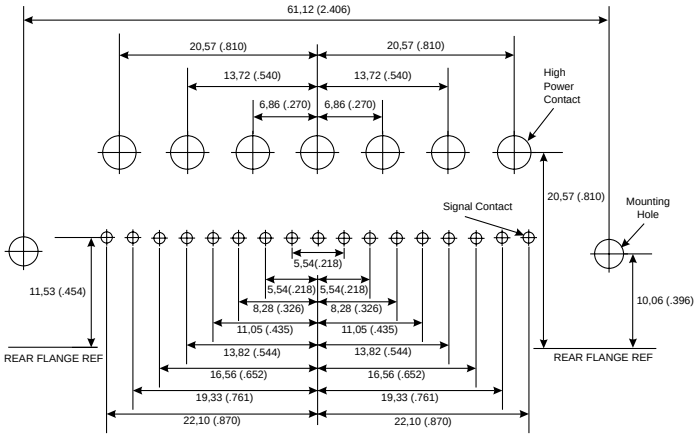


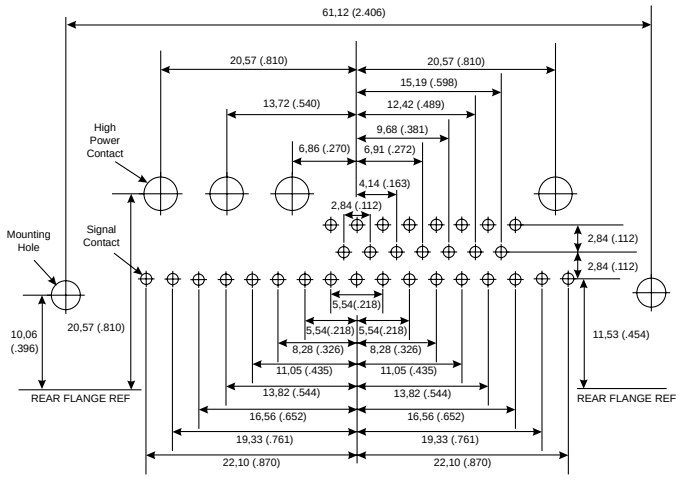


| | | |
|---|---|---|
| Shell Size | D | D |
| Contact Arrangement | 24W7 | 36W4 |
| No. of Size 20 Cavities | 17 #20 | 32 #20 |
| No. of Size 8 Cavities | 7 #8 | 4 #8 |

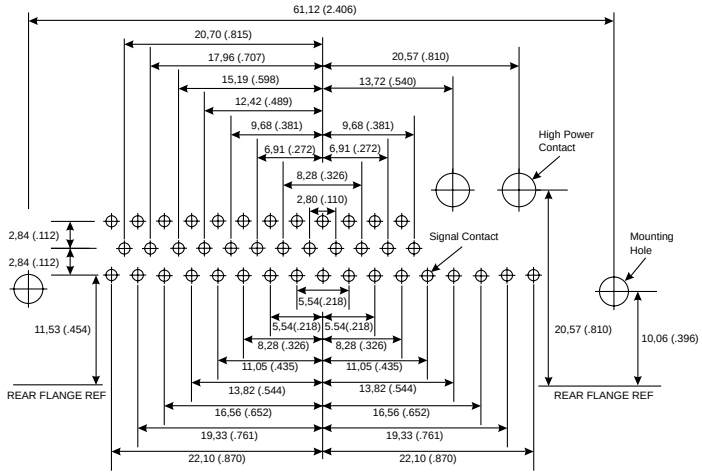


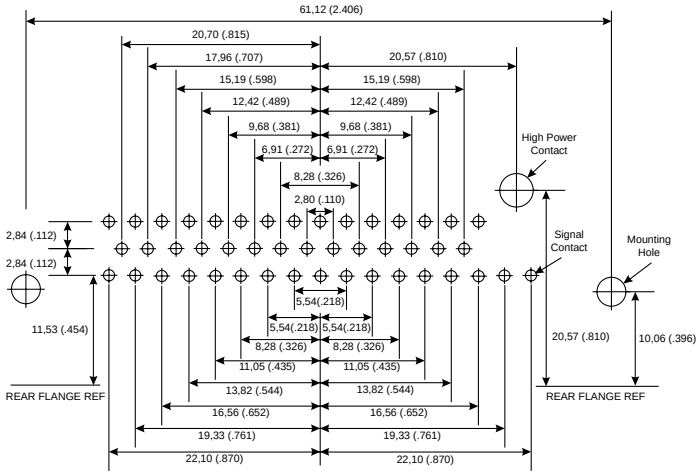


| | | |
|---|---|---|
| Shell Size | D | D |
| Contact Arrangement | 43W2 | 47W1 |
| No. of Size 20 Cavities | 41 #20 | 46 #20 |
| No. of Size 8 Cavities | 2 #8 | 1 #8 |

| Signal Contact Ø | Recommended PCB Hole Ø |
|---|---|
| 0,76 (.030) | 1,14 (.045) |

| Mounting Type | Recommended PCB Hole Ø |
|---|---|
| Without Boardlock | 3,05 (.120) |
| With Boardlock | 3,10 (.122) |

| Size 8 Contact Type | Recommended PCB Hole Ø |
|---|---|
| High Power (H) | 3,56 (.140) |







Dimensions are shown in mm (inch)
Dimensions subject to change

# High Power 90° — Receptacle

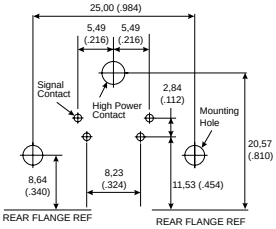


| | |
|---|---|
| Shell Size | E |
| Contact Arrangement | 5W1 |
| No. of Size 20 Cavities | 4 #20 |
| No. of Size 8 Cavities | 1 #8 |

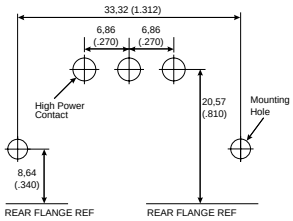


| | |
|---|---|
| Shell Size | A |
| Contact Arrangement | 3W3 |
| No. of Size 20 Cavities | 0 #20 |
| No. of Size 8 Cavities | 3 #8 |

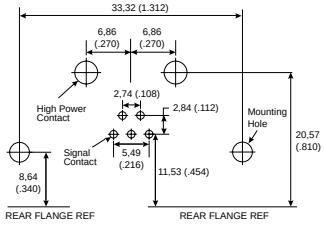


| | |
|---|---|
| Shell Size | A |
| Contact Arrangement | 7W2 |
| No. of Size 20 Cavities | 5 #20 |
| No. of Size 8 Cavities | 2 #8 |

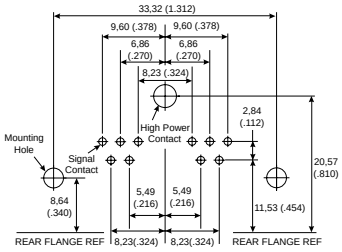


| | |
|---|---|
| Shell Size | A |
| Contact Arrangement | 11W1 |
| No. of Size 20 Cavities | 10 #20 |
| No. of Size 8 Cavities | 1 #8 |

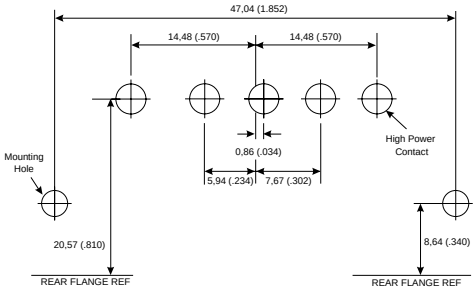


| | |
|---|---|
| Shell Size | B |
| Contact Arrangement | 5W5 |
| No. of Size 20 Cavities | 0 #20 |
| No. of Size 8 Cavities | 5 #8 |

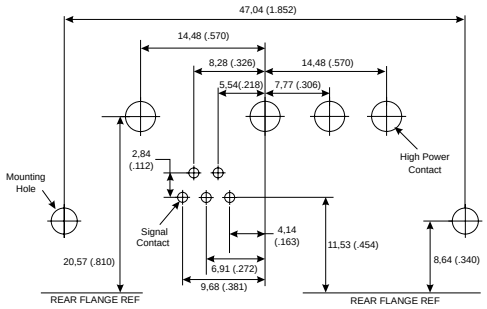


| | |
|---|---|
| Shell Size | B |
| Contact Arrangement | 9W4 |
| No. of Size 20 Cavities | 5 #20 |
| No. of Size 8 Cavities | 4 #8 |

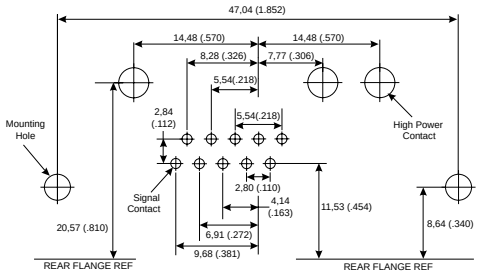


| | |
|---|---|
| Shell Size | B |
| Contact Arrangement | 13W3 |
| No. of Size 20 Cavities | 10 #20 |
| No. of Size 8 Cavities | 3 #8 |

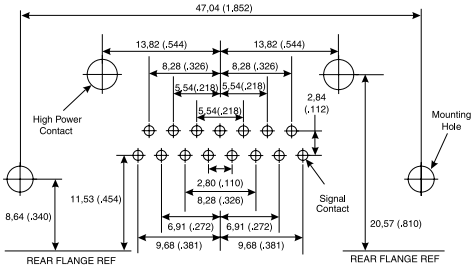


| | |
|---|---|
| Shell Size | B |
| Contact Arrangement | 17W2 |
| No. of Size 20 Cavities | 15 #20 |
| No. of Size 8 Cavities | 2 #8 |

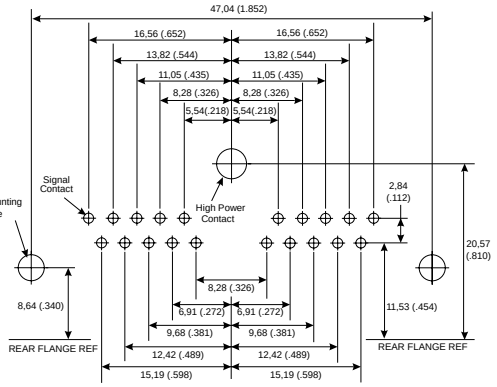


| | |
|---|---|
| Shell Size | B |
| Contact Arrangement | 21W1 |
| No. of Size 20 Cavities | 20 #20 |
| No. of Size 8 Cavities | 1 #8 |

| Signal Contact Ø | Recommended PCB Hole Ø |
|---|---|
| 0,76 (.030) | 1,14 (.045) |

| Mounting Type | Recommended PCB Hole Ø |
|---|---|
| Without Boardlock | 3,05 (.120) |
| With Boardlock | 3,10 (.122) |

| Size 8 Contact Type | Recommended PCB Hole Ø |
|---|---|
| High Power (H) | 3,56 (.140) |

# PCB Hole Pattern — Standard

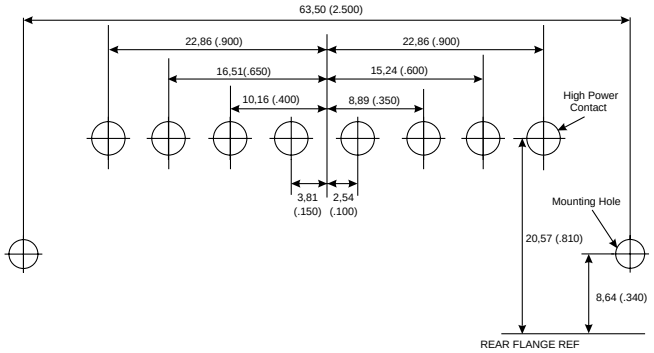


| | |
|---|---|
| Shell Size | C |
| Contact Arrangement | 8W8 |
| No. of Size 20 Cavities | 0 #20 |
| No. of Size 8 Cavities | 8 #8 |

# High Power 90° — Receptacle

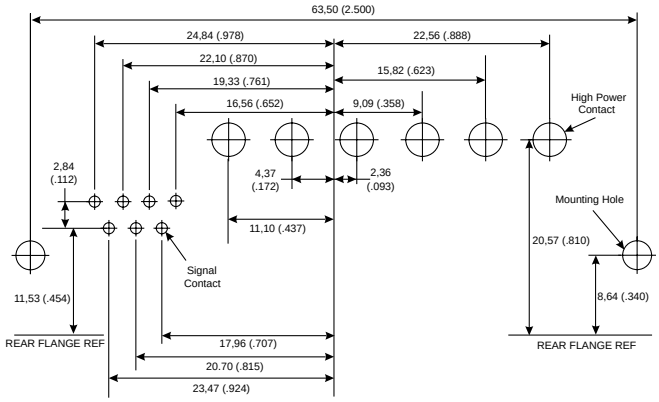


| | |
|---|---|
| Shell Size | C |
| Contact Arrangement | 13W6 |
| No. of Size 20 Cavities | 7 #20 |
| No. of Size 8 Cavities | 6 #8 |

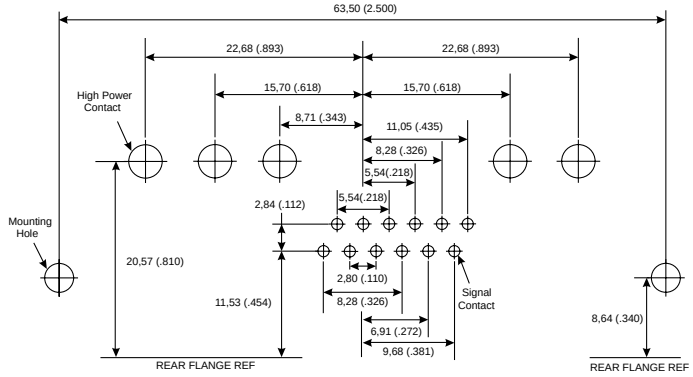


| | |
|---|---|
| Shell Size | C |
| Contact Arrangement | 17W5 |
| No. of Size 20 Cavities | 12 #20 |
| No. of Size 8 Cavities | 5 #8 |

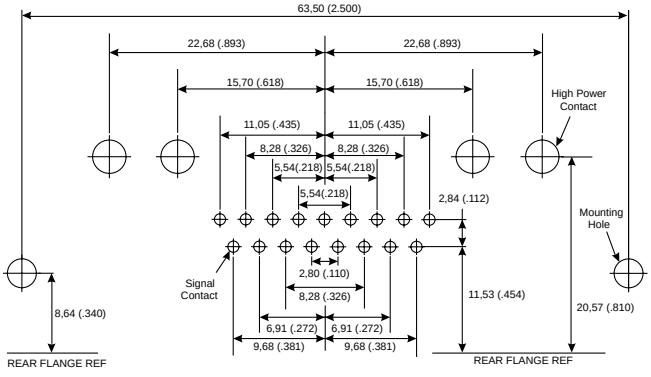


| | |
|---|---|
| Shell Size | C |
| Contact Arrangement | 21WA4 |
| No. of Size 20 Cavities | 17 #20 |
| No. of Size 8 Cavities | 4 #8 |

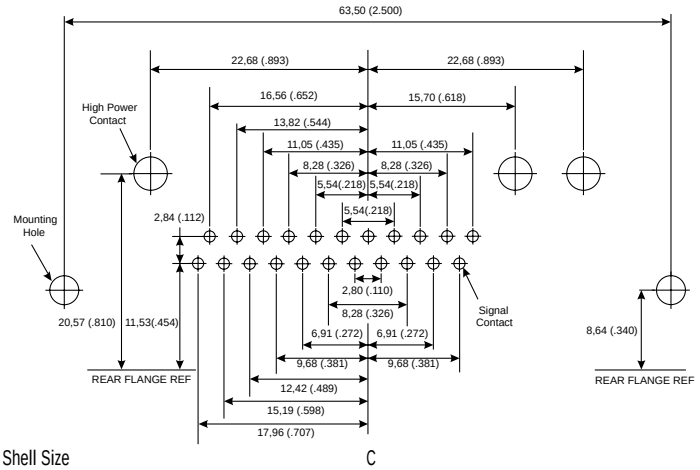


| | |
|---|---|
| Shell Size | C |
| Contact Arrangement | 25W3 |
| No. of Size 20 Cavities | 22 #20 |
| No. of Size 8 Cavities | 3 #8 |

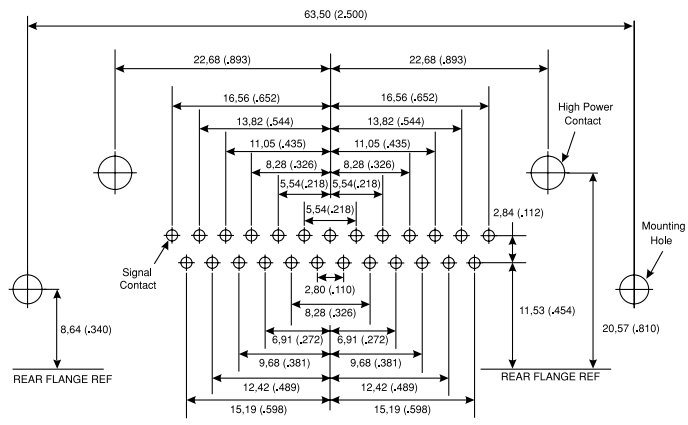


| | |
|---|---|
| Shell Size | C |
| Contact Arrangement | 27W2 |
| No. of Size 20 Cavities | 25 #20 |
| No. of Size 8 Cavities | 2 #8 |

| Signal Contact Ø | Recommended PCB Hole Ø |
|---|---|
| 0,76 (.030) | 1,14 (.045) |

| Mounting Type | Recommended PCB Hole Ø |
|---|---|
| Without Boardlock | 3,05 (.120) |
| With Boardlock | 3,10 (.122) |

| Size 8 Contact Type | Recommended PCB Hole Ø |
|---|---|
| High Power (H) | 3,56 (.140) |







Dimensions are shown in mm (inch)
Dimensions subject to change

# PCB Hole Pattern — Standard

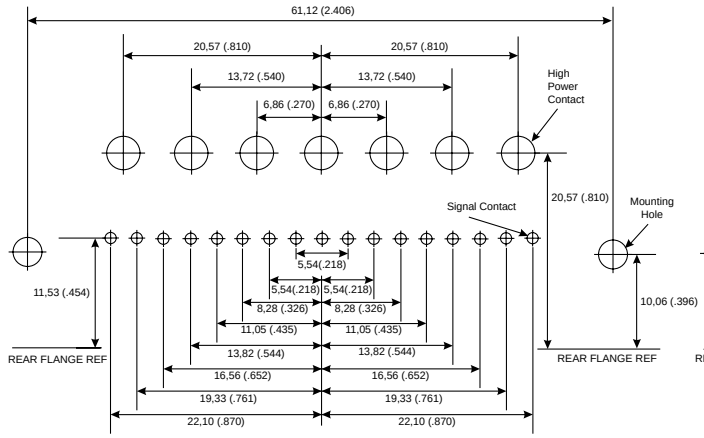


# High Power 90° — Receptacle

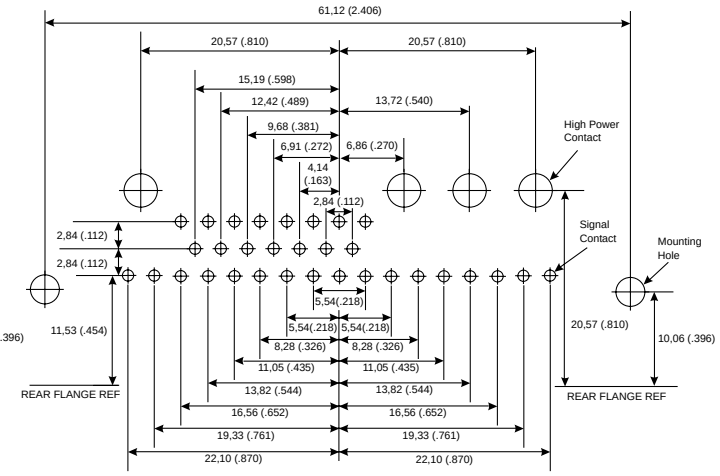


| | | |
|---|---|---|
| Shell Size | D | D |
| Contact Arrangement | 24W7 | 36W4 |
| No. of Size 20 Cavities | 17 #20 | 32 #20 |
| No. of Size 8 Cavities | 7 #8 | 4 #8 |

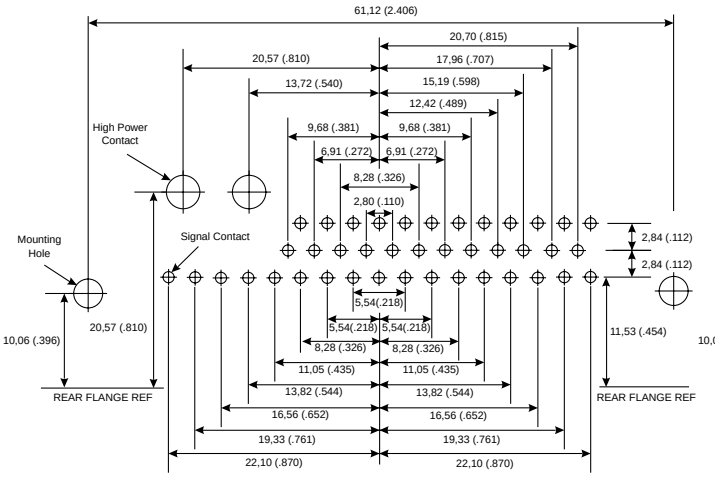


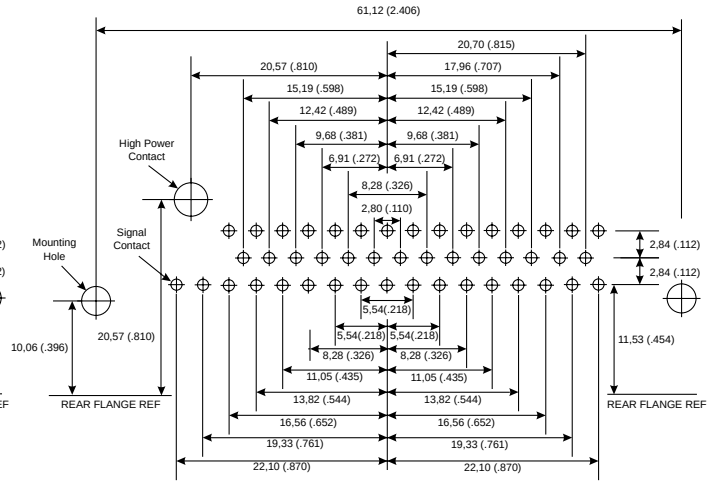


| | | |
|---|---|---|
| Shell Size | D | D |
| Contact Arrangement | 43W2 | 47W1 |
| No. of Size 20 Cavities | 41 #20 | 46 #20 |
| No. of Size 8 Cavities | 2 #8 | 1 #8 |

| Signal Contact Ø | Recommended PCB Hole Ø |
|---|---|
| 0,76 (.030) | 1,14 (.045) |

| Mounting Type | Recommended PCB Hole Ø |
|---|---|
| Without Boardlock | 3,05 (.120) |
| With Boardlock | 3,10 (.122) |

| Size 8 Contact Type | Recommended PCB Hole Ø |
|---|---|
| High Power (H) | 3,56 (.140) |

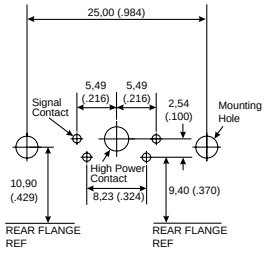


| | |
|---|---|
| Shell Size | E |
| Contact Arrangement | 5W1 |
| No. of Size 20 Cavities | 4 #20 |
| No. of Size 8 Cavities | 1 #8 |

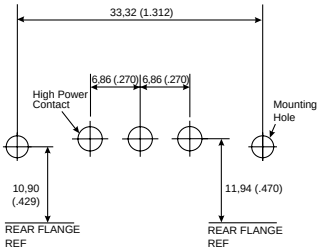


| | |
|---|---|
| Shell Size | A |
| Contact Arrangement | 3W3 |
| No. of Size 20 Cavities | 0 #20 |
| No. of Size 8 Cavities | 3 #8 |

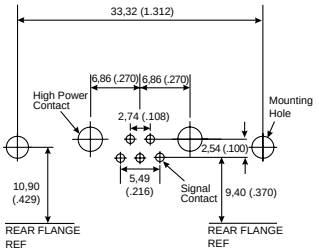


| | |
|---|---|
| Shell Size | A |
| Contact Arrangement | 7W2 |
| No. of Size 20 Cavities | 5 #20 |
| No. of Size 8 Cavities | 2 #8 |

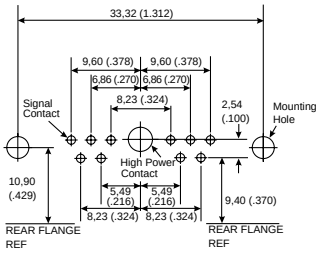


| | |
|---|---|
| Shell Size | A |
| Contact Arrangement | 11W1 |
| No. of Size 20 Cavities | 10 #20 |
| No. of Size 8 Cavities | 1 #8 |

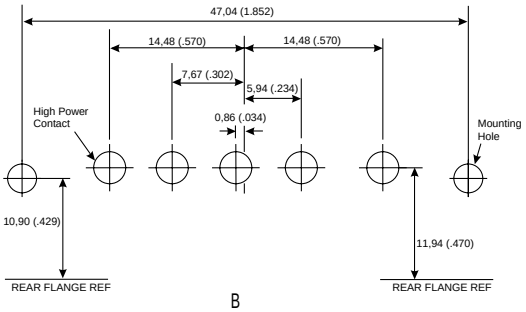


| | |
|---|---|
| Shell Size | B |
| Contact Arrangement | 5W5 |
| No. of Size 20 Cavities | 0 #20 |
| No. of Size 8 Cavities | 5 #8 |

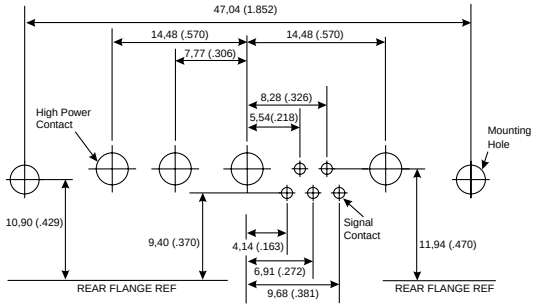


| | |
|---|---|
| Shell Size | B |
| Contact Arrangement | 9W4 |
| No. of Size 20 Cavities | 5 #20 |
| No. of Size 8 Cavities | 4 #8 |

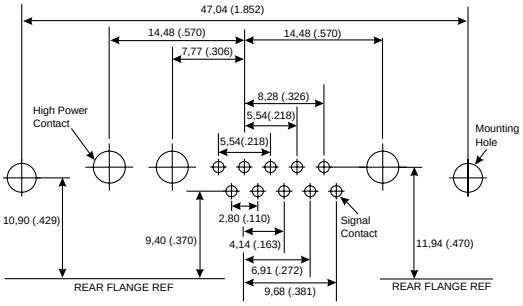


| | |
|---|---|
| Shell Size | B |
| Contact Arrangement | 13W3 |
| No. of Size 20 Cavities | 10 #20 |
| No. of Size 8 Cavities | 3 #8 |

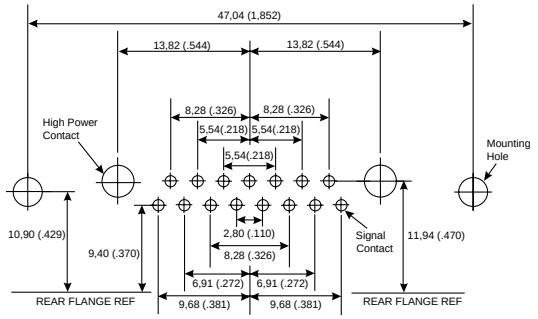


| | |
|---|---|
| Shell Size | B |
| Contact Arrangement | 17W2 |
| No. of Size 20 Cavities | 15 #20 |
| No. of Size 8 Cavities | 2 #8 |

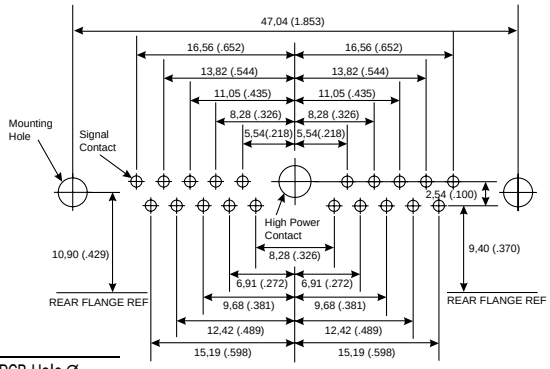


| | |
|---|---|
| Shell Size | B |
| Contact Arrangement | 21W1 |
| No. of Size 20 Cavities | 20 #20 |
| No. of Size 8 Cavities | 1 #8 |

| Signal Contact Ø | Recommended PCB Hole Ø |
|---|---|
| 0,60 (.024) | 1,00 (.039) |

| Mounting Type | Recommended PCB Hole Ø |
|---|---|
| Without Boardlock | 3,05 (.120) |
| With Boardlock | 3,10 (.122) |

| Size 8 Contact Type | Recommended PCB Hole Ø |
|---|---|
| High Power (P) | 3,28 (.129) |







Dimensions are shown in mm (inch)
Dimensions subject to change

# High Power 90° — Plug

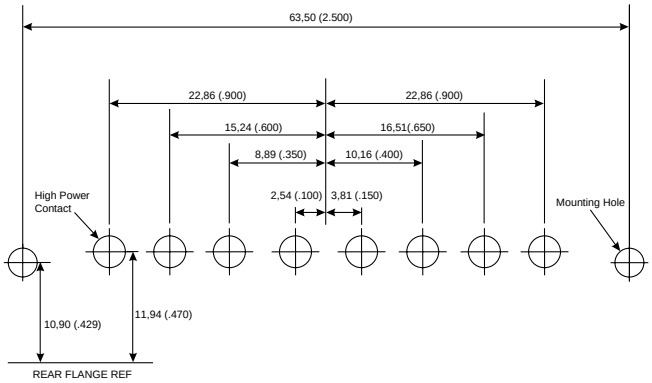


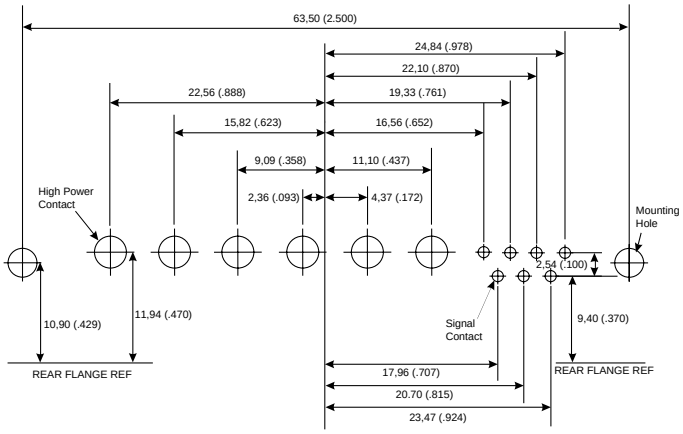


| | | |
|---|---|---|
| Shell Size | C | C |
| Contact Arrangement | 8W8 | 13W6 |
| No. of Size 20 Cavities | 0 #20 | 7 #20 |
| No. of Size 8 Cavities | 8 #8 | 6 #8 |

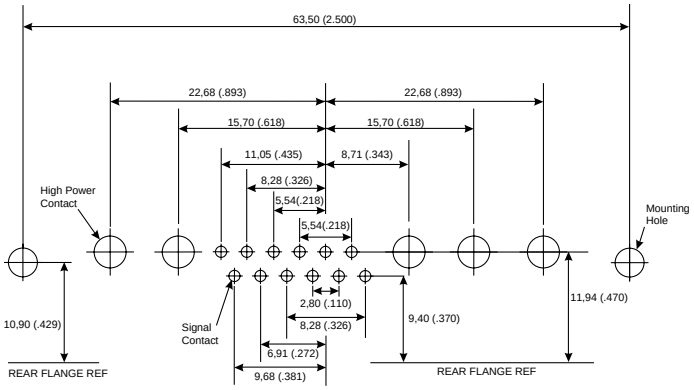


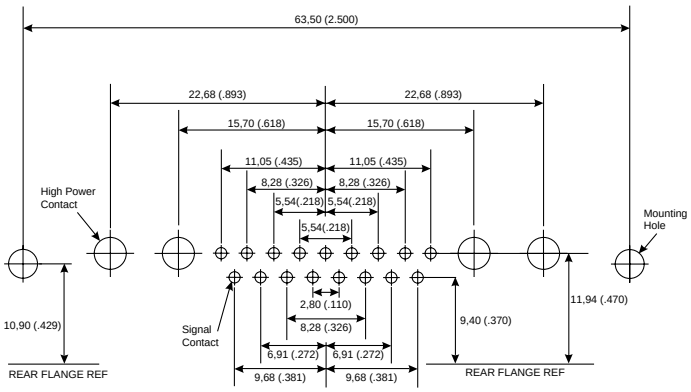


| | | |
|---|---|---|
| Shell Size | C | C |
| Contact Arrangement | 17W5 | 21WA4 |
| No. of Size 20 Cavities | 12 #20 | 17 #20 |
| No. of Size 8 Cavities | 5 #8 | 4 #8 |

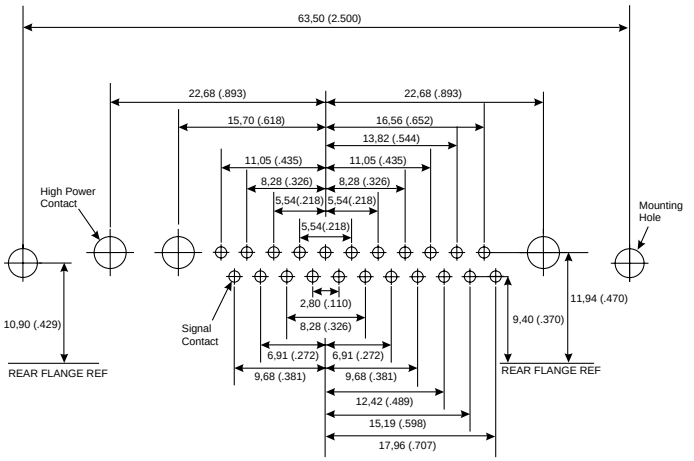


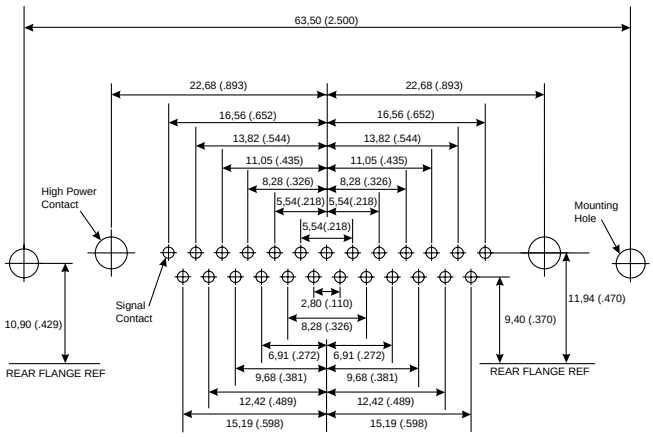


| | | |
|---|---|---|
| Shell Size | C | C |
| Contact Arrangement | 25W3 | 27W2 |
| No. of Size 20 Cavities | 22 #20 | 25 #20 |
| No. of Size 8 Cavities | 3 #8 | 2 #8 |

| Signal Contact Ø | Recommended PCB Hole Ø |
|---|---|
| 0,60 (.024) | 1,00 (.039) |

| Mounting Type | Recommended PCB Hole Ø |
|---|---|
| Without Boardlock | 3,05 (.120) |
| With Boardlock | 3,10 (.122) |

| Size 8 Contact Type | Recommended PCB Hole Ø |
|---|---|
| High Power (P) | 3,28 (.129) |

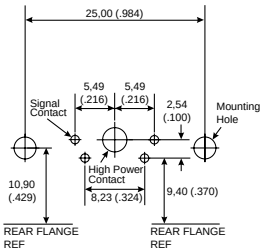


| | |
|---|---|
| Shell Size | E |
| Contact Arrangement | 5W1 |
| No. of Size 20 Cavities | 4 #20 |
| No. of Size 8 Cavities | 1 #8 |

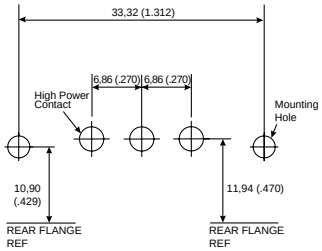


| | |
|---|---|
| Shell Size | A |
| Contact Arrangement | 3W3 |
| No. of Size 20 Cavities | 0 #20 |
| No. of Size 8 Cavities | 3 #8 |

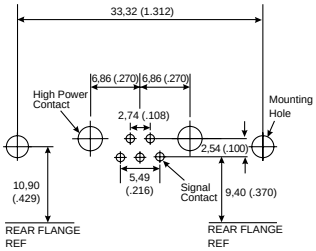


| | |
|---|---|
| Shell Size | A |
| Contact Arrangement | 7W2 |
| No. of Size 20 Cavities | 5 #20 |
| No. of Size 8 Cavities | 2 #8 |

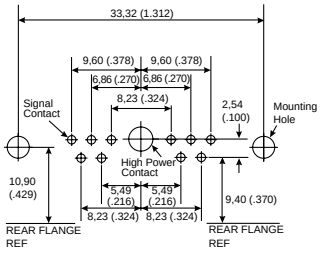


| | |
|---|---|
| Shell Size | A |
| Contact Arrangement | 11W1 |
| No. of Size 20 Cavities | 10 #20 |
| No. of Size 8 Cavities | 1 #8 |

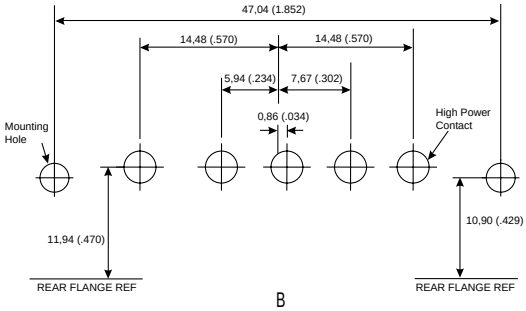


| | |
|---|---|
| Shell Size | B |
| Contact Arrangement | 5W5 |
| No. of Size 20 Cavities | 0 #20 |
| No. of Size 8 Cavities | 5 #8 |

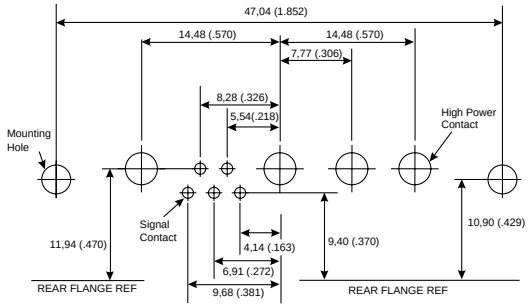


| | |
|---|---|
| Shell Size | B |
| Contact Arrangement | 9W4 |
| No. of Size 20 Cavities | 5 #20 |
| No. of Size 8 Cavities | 4 #8 |

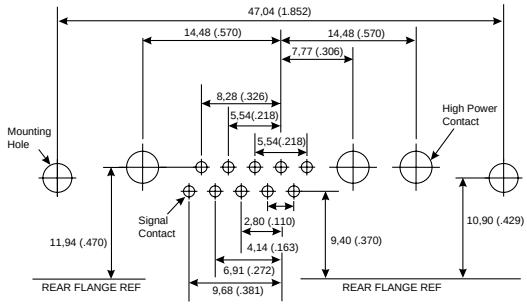


| | |
|---|---|
| Shell Size | B |
| Contact Arrangement | 13W3 |
| No. of Size 20 Cavities | 10 #20 |
| No. of Size 8 Cavities | 3 #8 |

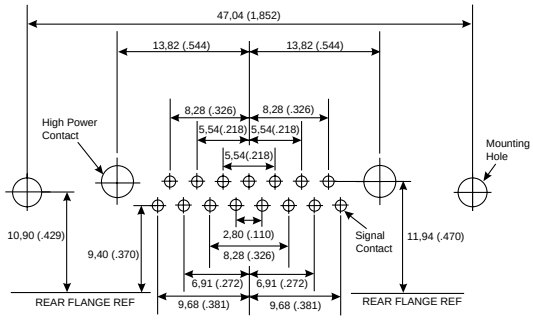


| | |
|---|---|
| Shell Size | B |
| Contact Arrangement | 17W2 |
| No. of Size 20 Cavities | 15 #20 |
| No. of Size 8 Cavities | 2 #8 |

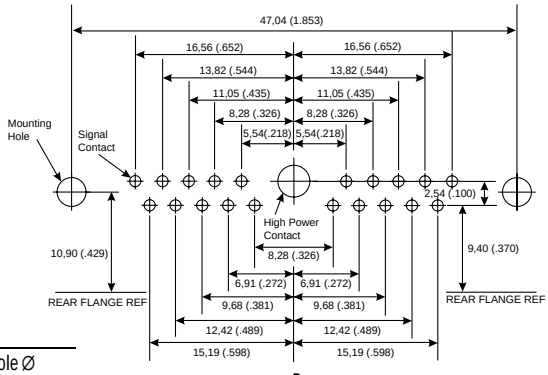


| | |
|---|---|
| Shell Size | B |
| Contact Arrangement | 21W1 |
| No. of Size 20 Cavities | 20 #20 |
| No. of Size 8 Cavities | 1 #8 |

| Signal Contact Ø | Recommended PCB Hole Ø |
|---|---|
| 0,60 (.024) | 1,00 (.039) |

| Mounting Type | Recommended PCB Hole Ø |
|---|---|
| Without Boardlock | 3,05 (.120) |
| With Boardlock | 3,10 (.122) |

| Size 8 Contact Type | Recommended PCB Hole Ø |
|---|---|
| High Power (P) | 3,28 (.129) |







Dimensions are shown in mm (inch)
Dimensions subject to change

# PCB Hole Pattern — European

# High Power 90° — Receptacle

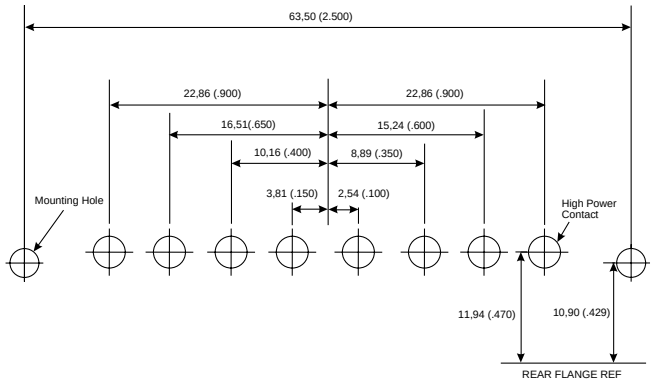


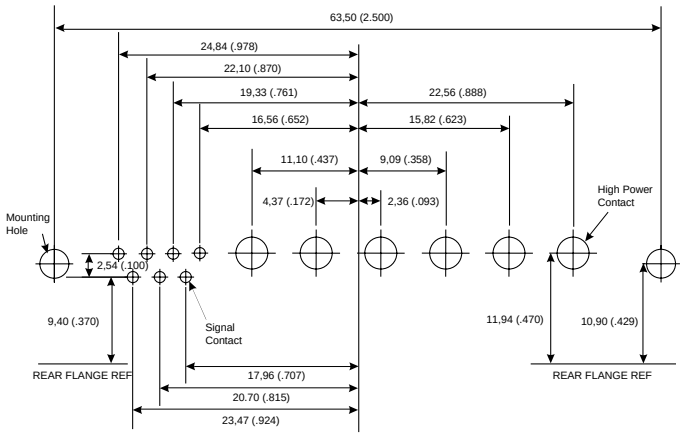


| | | |
|---|---|---|
| Shell Size | C | C |
| Contact Arrangement | 8W8 | 13W6 |
| No. of Size 20 Cavities | 0 #20 | 7 #20 |
| No. of Size 8 Cavities | 8 #8 | 6 #8 |

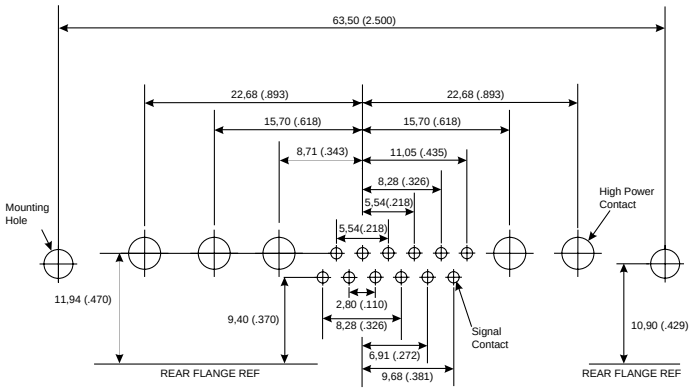


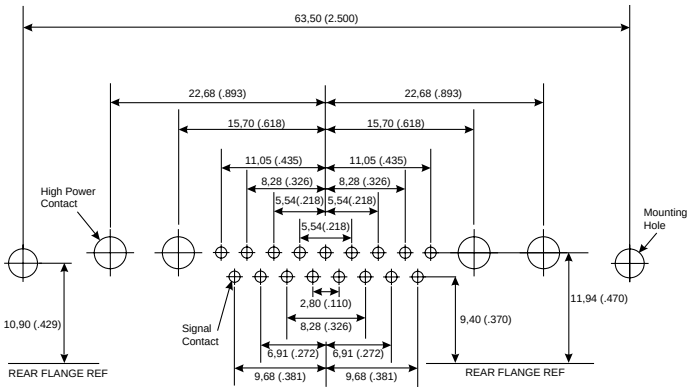


| | | |
|---|---|---|
| Shell Size | C | C |
| Contact Arrangement | 17W5 | 21WA4 |
| No. of Size 20 Cavities | 12 #20 | 17 #20 |
| No. of Size 8 Cavities | 5 #8 | 4 #8 |

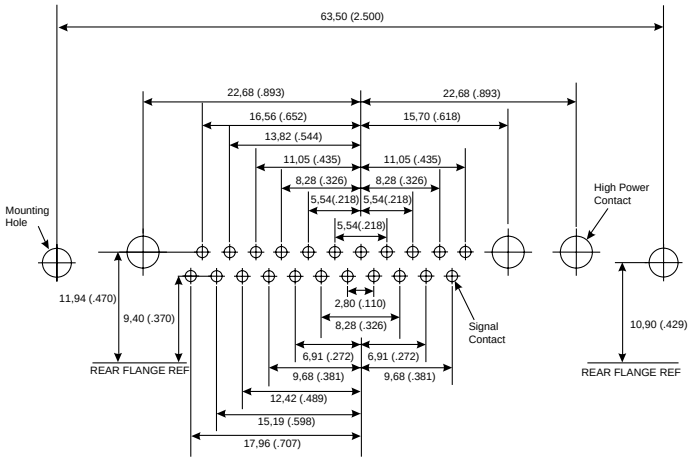


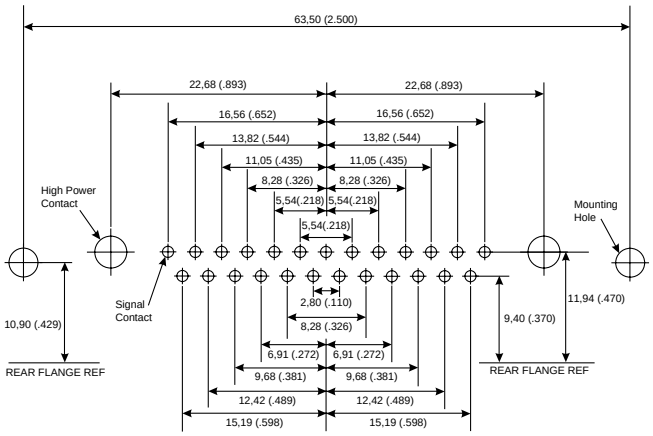


| | | |
|---|---|---|
| Shell Size | C | C |
| Contact Arrangement | 25W3 | 27W2 |
| No. of Size 20 Cavities | 22 #20 | 25 #20 |
| No. of Size 8 Cavities | 3 #8 | 2 #8 |

| Signal Contact Ø | Recommended PCB Hole Ø |
|---|---|
| 0,60 (.024) | 1,00 (.039) |

| Mounting Type | Recommended PCB Hole Ø |
|---|---|
| Without Boardlock | 3,05 (.120) |
| With Boardlock | 3,10 (.122) |

| Size 8 Contact Type | Recommended PCB Hole Ø |
|---|---|
| High Power (P) | 3,28 (.129) |

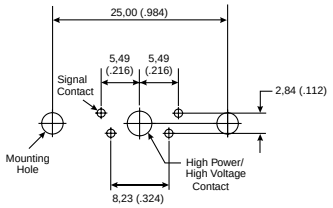


| | |
|---|---|
| Shell Size | E |
| Contact Arrangement | 5W1 |
| No. of Size 20 Cavities | 4 #20 |
| No. of Size 8 Cavities | 1 #8 |

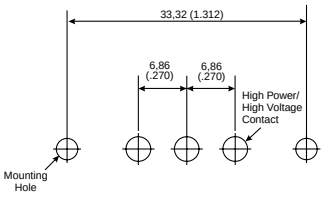


| | |
|---|---|
| Shell Size | A |
| Contact Arrangement | 3W3 |
| No. of Size 20 Cavities | 0 #20 |
| No. of Size 8 Cavities | 3 #8 |

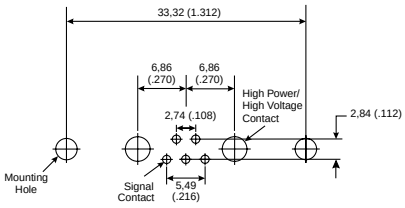


| | |
|---|---|
| Shell Size | A |
| Contact Arrangement | 7W2 |
| No. of Size 20 Cavities | 5 #20 |
| No. of Size 8 Cavities | 2 #8 |

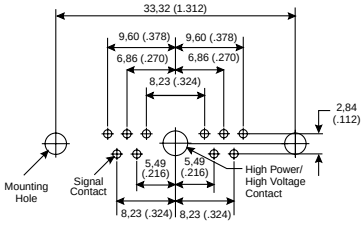


| | |
|---|---|
| Shell Size | A |
| Contact Arrangement | 11W1 |
| No. of Size 20 Cavities | 10 #20 |
| No. of Size 8 Cavities | 1 #8 |

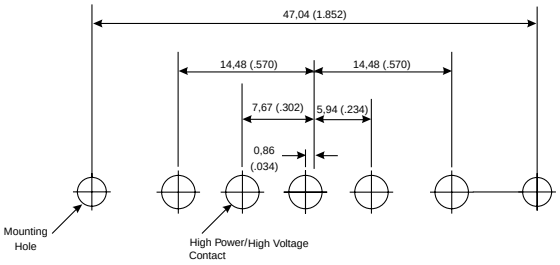


| | |
|---|---|
| Shell Size | B |
| Contact Arrangement | 5W5 |
| No. of Size 20 Cavities | 0 #20 |
| No. of Size 8 Cavities | 5 #8 |

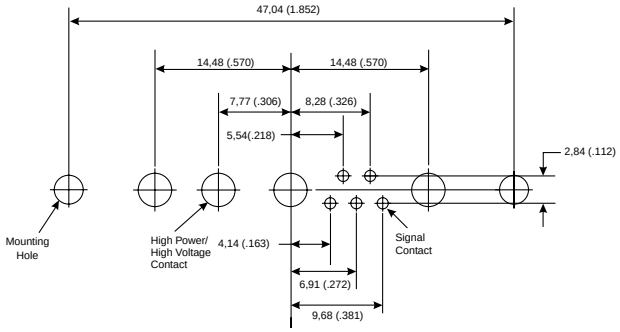


| | |
|---|---|
| Shell Size | B |
| Contact Arrangement | 9W4 |
| No. of Size 20 Cavities | 5 #20 |
| No. of Size 8 Cavities | 4 #8 |

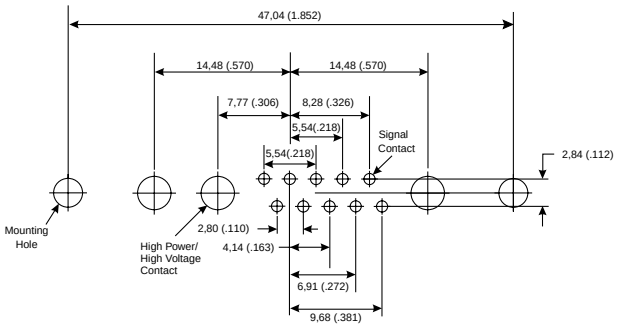


| | |
|---|---|
| Shell Size | B |
| Contact Arrangement | 13W3 |
| No. of Size 20 Cavities | 10 #20 |
| No. of Size 8 Cavities | 3 #8 |

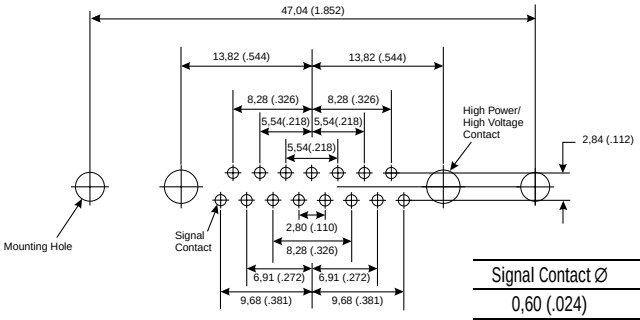


| | |
|---|---|
| Shell Size | B |
| Contact Arrangement | 17W2 |
| No. of Size 20 Cavities | 15 #20 |
| No. of Size 8 Cavities | 2 #8 |

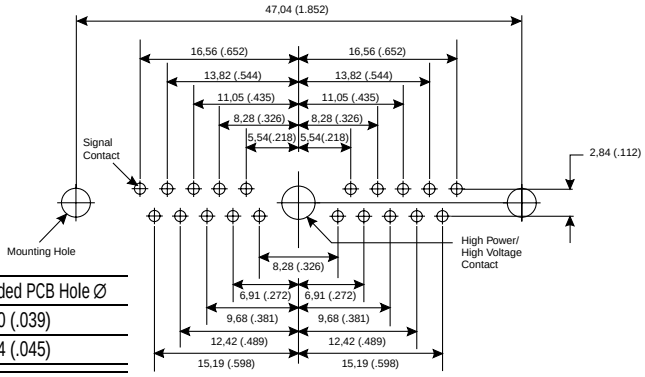


| | |
|---|---|
| Shell Size | B |
| Contact Arrangement | 21W1 |
| No. of Size 20 Cavities | 20 #20 |
| No. of Size 8 Cavities | 1 #8 |

| Signal Contact Ø | Recommended PCB Hole Ø |
|---|---|
| 0,60 (.024) | 1,00 (.039) |
| 0,76 (.030) | 1,14 (.045) |

| Mounting Type | Recommended PCB Hole Ø |
|---|---|
| Without Boardlock | 3,05 (.120) |
| With Boardlock | 3,10 (.122) |

| Size 8 Contact Type | Recommended PCB Hole Ø |
|---|---|
| High Power (H) | 3,56 (.140) |
| High Voltage (V) | 1,96 (.077) |





ITT Cannon

Dimensions are shown in mm (inch)
Dimensions subject to change

# PCB Hole Pattern — Standard/European

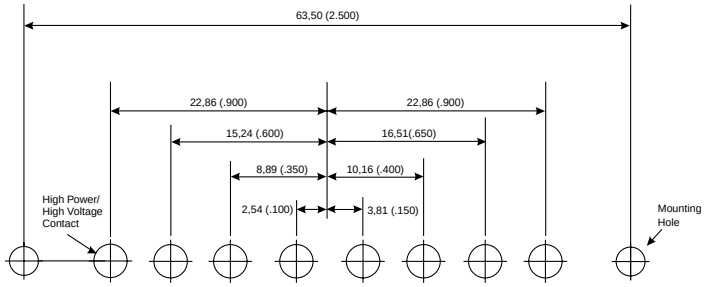


| | |
|---|---|
| Shell Size | C |
| Contact Arrangement | 8W8 |
| No. of Size 20 Cavities | 0 #20 |
| No. of Size 8 Cavities | 8 #8 |

# High Power/Voltage Straight — Plug

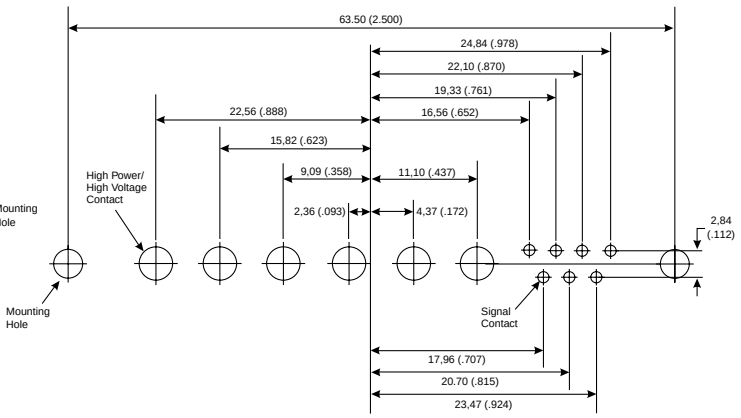


| | |
|---|---|
| Shell Size | C |
| Contact Arrangement | 13W6 |
| No. of Size 20 Cavities | 7 #20 |
| No. of Size 8 Cavities | 6 #8 |

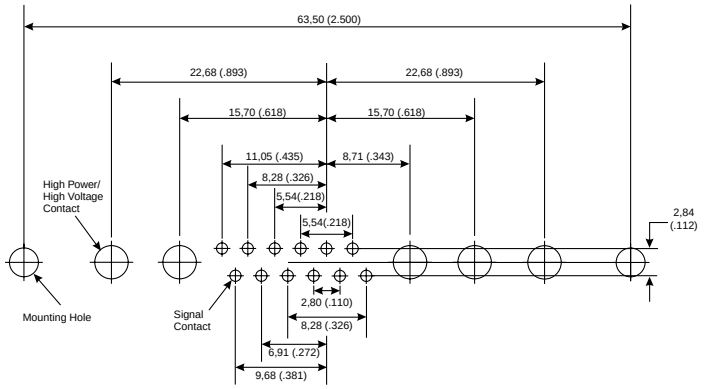


| | |
|---|---|
| Shell Size | C |
| Contact Arrangement | 17W5 |
| No. of Size 20 Cavities | 12 #20 |
| No. of Size 8 Cavities | 5 #8 |

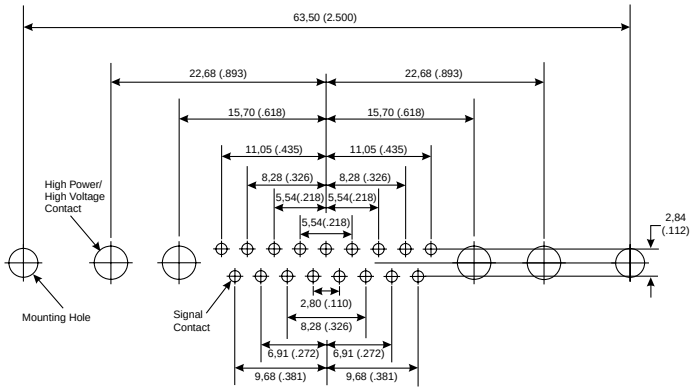


| | |
|---|---|
| Shell Size | C |
| Contact Arrangement | 21WA4 |
| No. of Size 20 Cavities | 17 #20 |
| No. of Size 8 Cavities | 4 #8 |

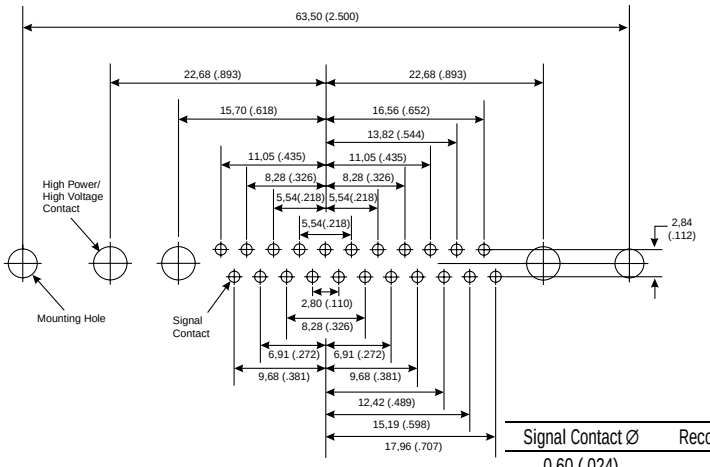


| | |
|---|---|
| Shell Size | C |
| Contact Arrangement | 25W3 |
| No. of Size 20 Cavities | 22 #20 |
| No. of Size 8 Cavities | 3 #8 |

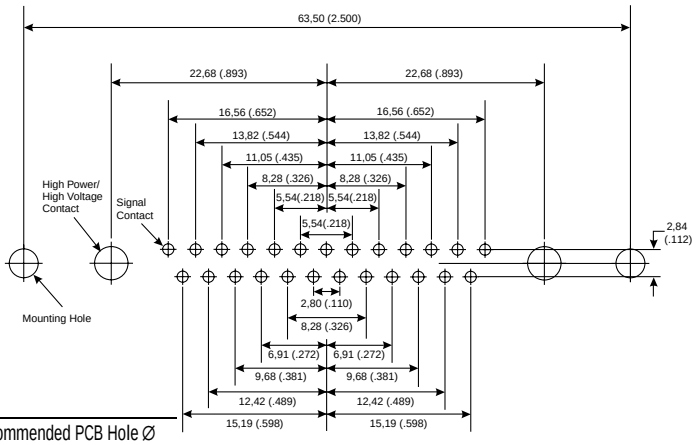


| | |
|---|---|
| Shell Size | C |
| Contact Arrangement | 27W2 |
| No. of Size 20 Cavities | 25 #20 |
| No. of Size 8 Cavities | 2 #8 |

| Signal Contact Ø | Recommended PCB Hole Ø |
|---|---|
| 0,60 (.024) | 1,00 (.039) |
| 0,76 (.030) | 1,14 (.045) |

| Mounting Type | Recommended PCB Hole Ø |
|---|---|
| Without Boardlock | 3,05 (.120) |
| With Boardlock | 3,10 (.122) |

| Size 8 Contact Type | Recommended PCB Hole Ø |
|---|---|
| High Power (H) | 3,56 (.140) |
| High Voltage (V) | 1,96 (.077) |

# PCB Hole Pattern — Standard/European

# High Power/Voltage Straight — Plug

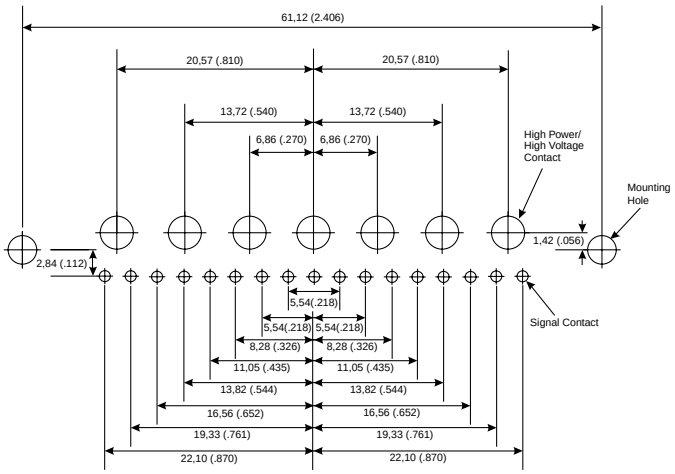


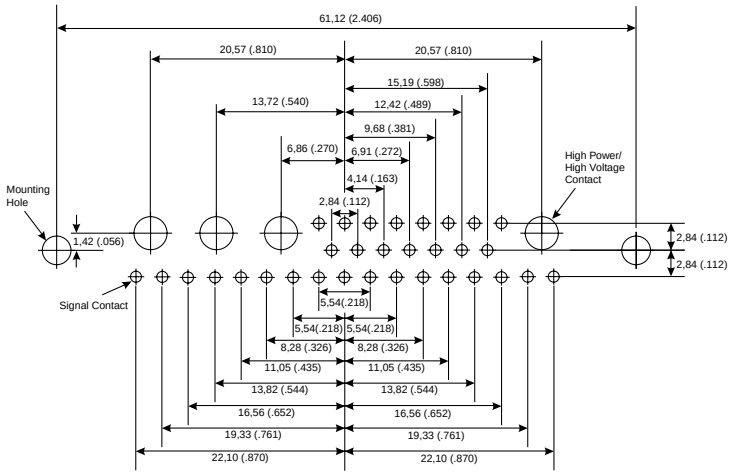


| | | |
|---|---|---|
| Shell Size | D | D |
| Contact Arrangement | 24W7 | 36W4 |
| No. of Size 20 Cavities | 17 #20 | 32 #20 |
| No. of Size 8 Cavities | 7 #8 | 4 #8 |

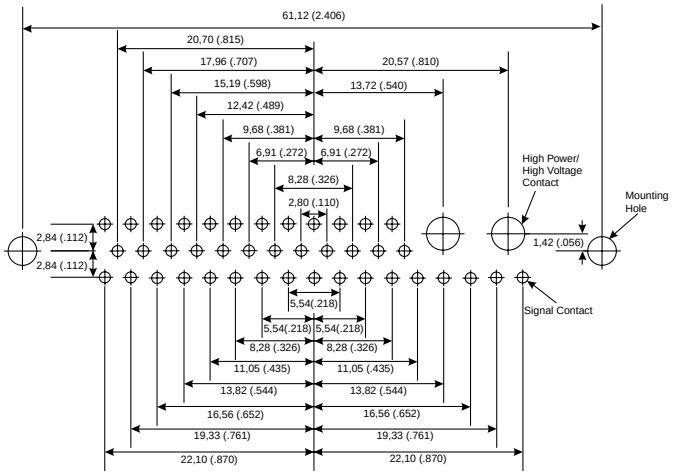


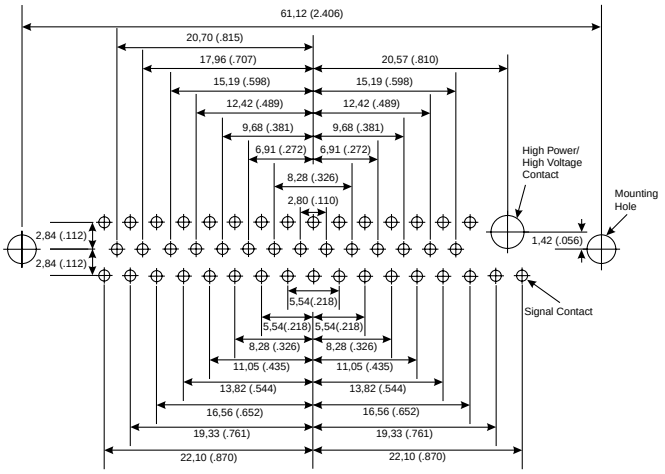


| | | |
|---|---|---|
| Shell Size | D | D |
| Contact Arrangement | 43W2 | 47W1 |
| No. of Size 20 Cavities | 41 #20 | 46 #20 |
| No. of Size 8 Cavities | 2 #8 | 1 #8 |

| Signal Contact Ø | Recommended PCB Hole Ø |
|---|---|
| 0,60 (.024) | 1,00 (.039) |
| 0,76 (.030) | 1,14 (.045) |

| Mounting Type | Recommended PCB Hole Ø |
|---|---|
| Without Boardlock | 3,05 (.120) |
| With Boardlock | 3,10 (.122) |

| Size 8 Contact Type | Recommended PCB Hole Ø |
|---|---|
| High Power (H) | 3,56 (.140) |
| High Voltage (V) | 1,96 (.077) |







Dimensions are shown in mm (inch)
Dimensions subject to change

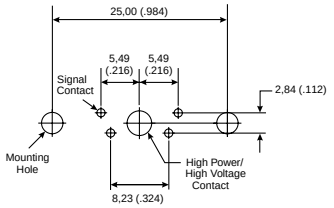


| | |
|---|---|
| Shell Size | E |
| Contact Arrangement | 5W1 |
| No. of Size 20 Cavities | 4 #20 |
| No. of Size 8 Cavities | 1 #8 |

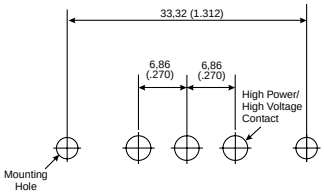


| | |
|---|---|
| Shell Size | A |
| Contact Arrangement | 3W3 |
| No. of Size 20 Cavities | 0 #20 |
| No. of Size 8 Cavities | 3 #8 |

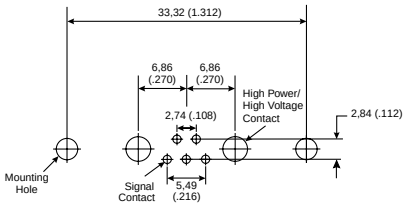


| | |
|---|---|
| Shell Size | A |
| Contact Arrangement | 7W2 |
| No. of Size 20 Cavities | 5 #20 |
| No. of Size 8 Cavities | 2 #8 |

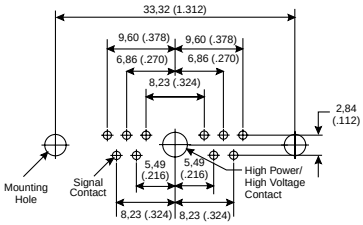


| | |
|---|---|
| Shell Size | A |
| Contact Arrangement | 11W1 |
| No. of Size 20 Cavities | 10 #20 |
| No. of Size 8 Cavities | 1 #8 |

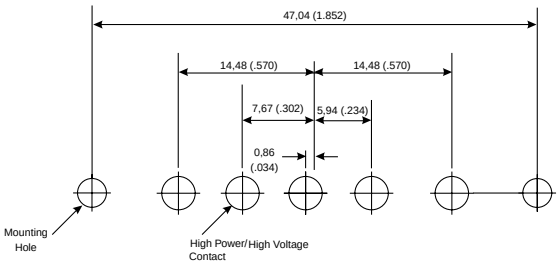


| | |
|---|---|
| Shell Size | B |
| Contact Arrangement | 5W5 |
| No. of Size 20 Cavities | 0 #20 |
| No. of Size 8 Cavities | 5 #8 |

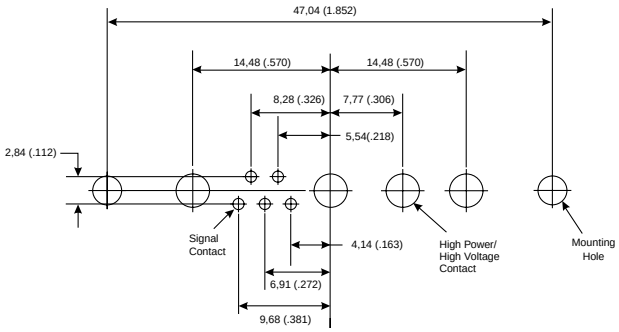


| | |
|---|---|
| Shell Size | B |
| Contact Arrangement | 9W4 |
| No. of Size 20 Cavities | 5 #20 |
| No. of Size 8 Cavities | 4 #8 |

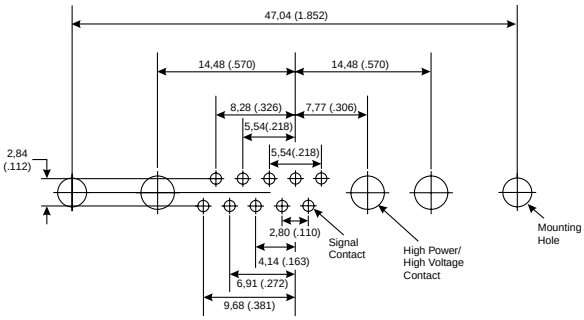


| | |
|---|---|
| Shell Size | B |
| Contact Arrangement | 13W3 |
| No. of Size 20 Cavities | 10 #20 |
| No. of Size 8 Cavities | 3 #8 |

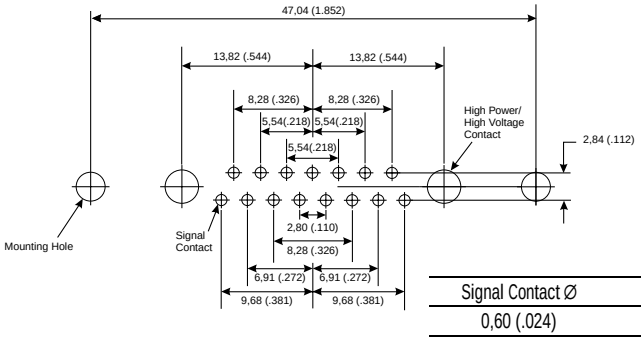


| | |
|---|---|
| Shell Size | B |
| Contact Arrangement | 17W2 |
| No. of Size 20 Cavities | 15 #20 |
| No. of Size 8 Cavities | 2 #8 |

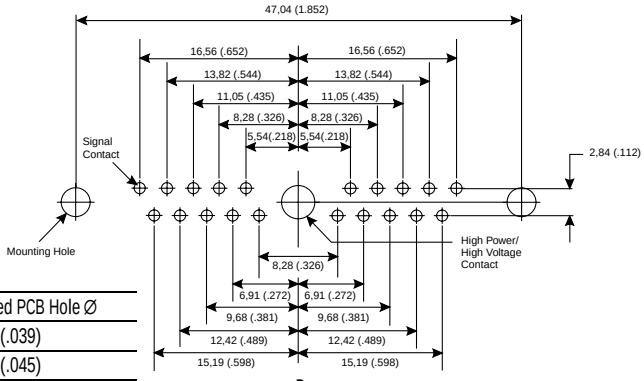


| | |
|---|---|
| Shell Size | B |
| Contact Arrangement | 21W1 |
| No. of Size 20 Cavities | 20 #20 |
| No. of Size 8 Cavities | 1 #8 |

| Signal Contact Ø | Recommended PCB Hole Ø |
|---|---|
| 0,60 (.024) | 1,00 (.039) |
| 0,76 (.030) | 1,14 (.045) |

| Mounting Type | Recommended PCB Hole Ø |
|---|---|
| Without Boardlock | 3,05 (.120) |
| With Boardlock | 3,10 (.122) |

| Size 8 Contact Type | Recommended PCB Hole Ø |
|---|---|
| High Power (H) | 3,56 (.140) |
| High Voltage (V) | 1,96 (.077) |

# PCB Hole Pattern — Standard/European

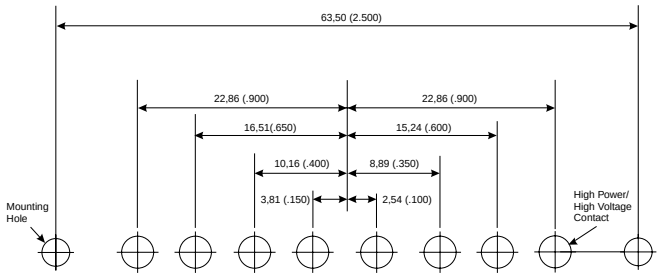


| | |
|---|---|
| Shell Size | C |
| Contact Arrangement | 8W8 |
| No. of Size 20 Cavities | 0 #20 |
| No. of Size 8 Cavities | 8 #8 |

# High Power/Voltage Straight — Receptacle

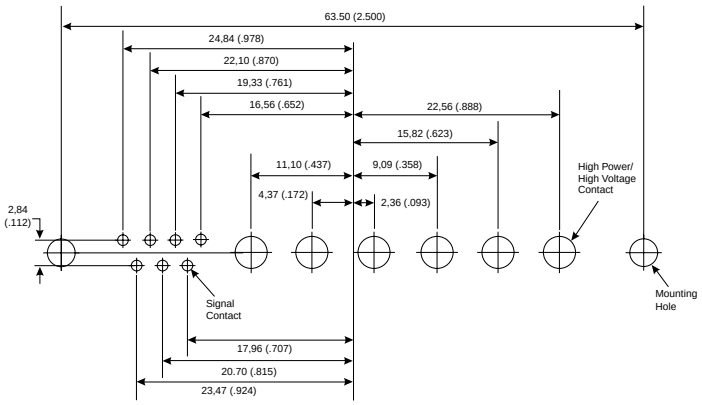


| | |
|---|---|
| Shell Size | C |
| Contact Arrangement | 13W6 |
| No. of Size 20 Cavities | 7 #20 |
| No. of Size 8 Cavities | 6 #8 |

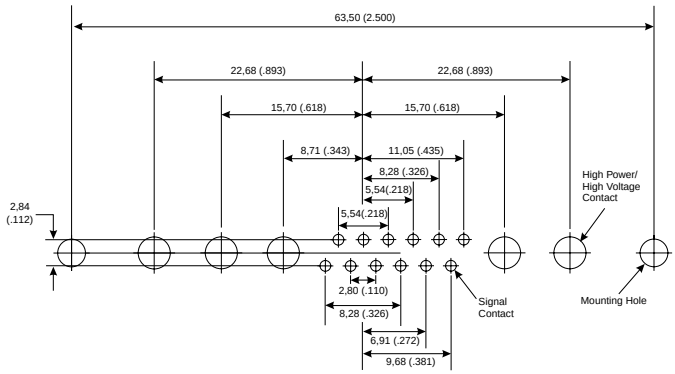


| | |
|---|---|
| Shell Size | C |
| Contact Arrangement | 17W5 |
| No. of Size 20 Cavities | 12 #20 |
| No. of Size 8 Cavities | 5 #8 |

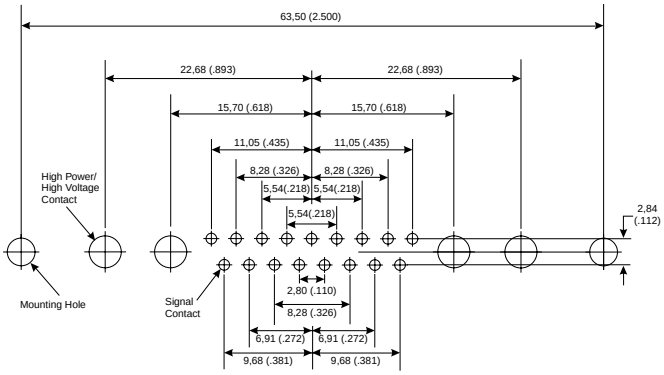


| | |
|---|---|
| Shell Size | C |
| Contact Arrangement | 21WA4 |
| No. of Size 20 Cavities | 17 #20 |
| No. of Size 8 Cavities | 4 #8 |

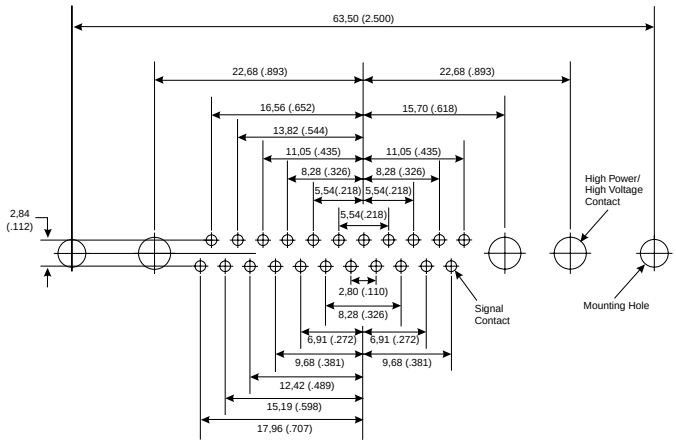


| | |
|---|---|
| Shell Size | C |
| Contact Arrangement | 25W3 |
| No. of Size 20 Cavities | 22 #20 |
| No. of Size 8 Cavities | 3 #8 |

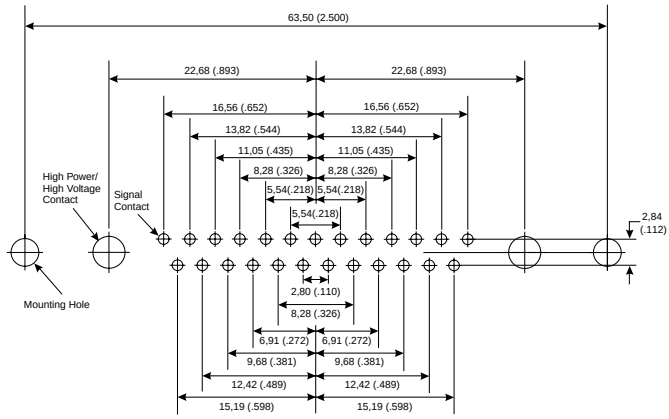


| | |
|---|---|
| Shell Size | C |
| Contact Arrangement | 27W2 |
| No. of Size 20 Cavities | 25 #20 |
| No. of Size 8 Cavities | 2 #8 |

| Signal Contact Ø | Recommended PCB Hole Ø |
|---|---|
| 0,60 (.024) | 1,00 (.039) |
| 0,76 (.030) | 1,14 (.045) |

| Mounting Type | Recommended PCB Hole Ø |
|---|---|
| Without Boardlock | 3,05 (.120) |
| With Boardlock | 3,10 (.122) |

| Size 8 Contact Type | Recommended PCB Hole Ø |
|---|---|
| High Power (H) | 3,56 (.140) |
| High Voltage (V) | 1,96 (.077) |







Dimensions are shown in mm (inch)
Dimensions subject to change

# PCB Hole Pattern — Standard/European

# High Power/Voltage Straight — Receptacle

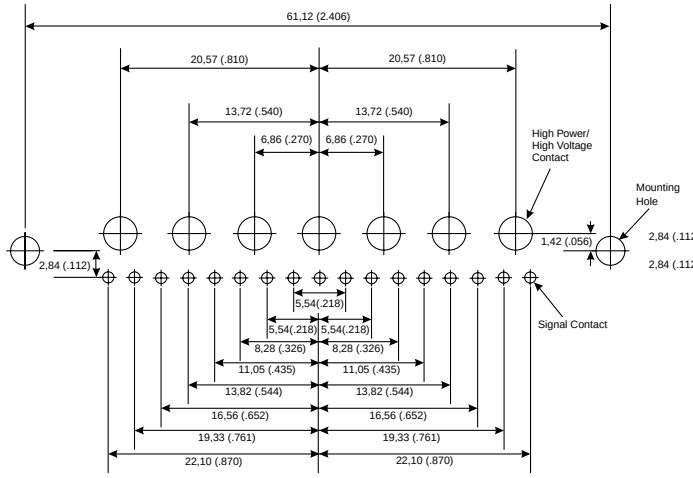


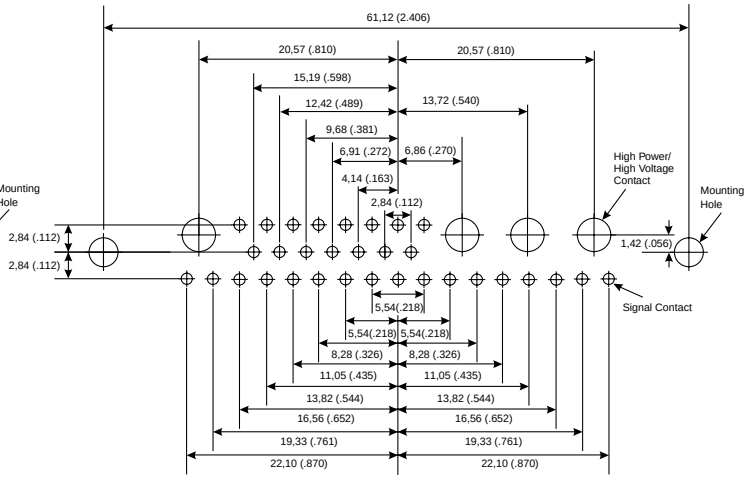


| | | |
|---|---|---|
| Shell Size | D | D |
| Contact Arrangement | 24W7 | 36W4 |
| No. of Size 20 Cavities | 17 #20 | 32 #20 |
| No. of Size 8 Cavities | 7 #8 | 4 #8 |

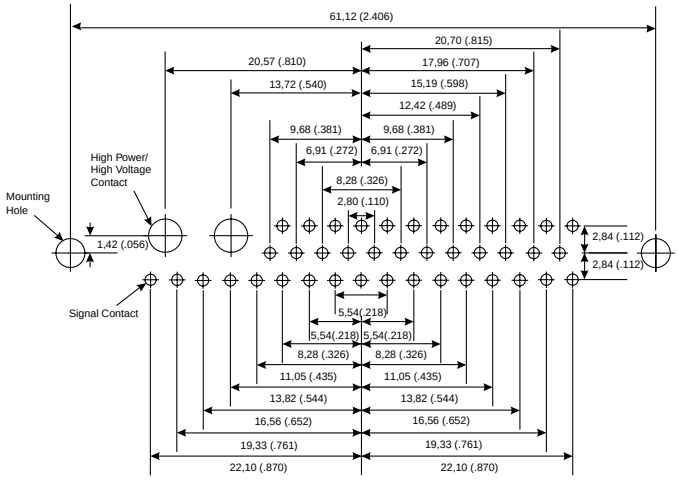


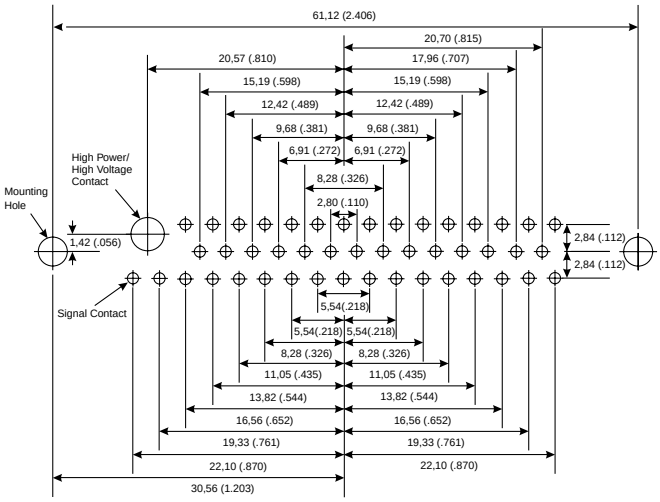


| | | |
|---|---|---|
| Shell Size | D | D |
| Contact Arrangement | 43W2 | 47W1 |
| No. of Size 20 Cavities | 41 #20 | 46 #20 |
| No. of Size 8 Cavities | 2 #8 | 1 #8 |

| Signal Contact Ø | Recommended PCB Hole Ø |
|---|---|
| 0,60 (.024) | 1,00 (.039) |
| 0,76 (.030) | 1,14 (.045) |

| Mounting Type | Recommended PCB Hole Ø |
|---|---|
| Without Boardlock | 3,05 (.120) |
| With Boardlock | 3,10 (.122) |

| Size 8 Contact Type | Recommended PCB Hole Ø |
|---|---|
| High Power (H) | 3,56 (.140) |
| High Voltage (V) | 1,96 (.077) |

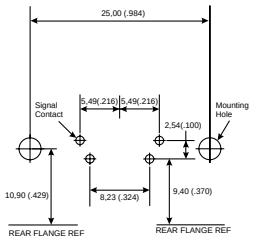


| | |
|---|---|
| Shell Size | E |
| Contact Arrangement | 5W1 |
| No. of Size 20 Cavities | 4 #20 |
| No. of Size 8 Cavities | 0 #8 |

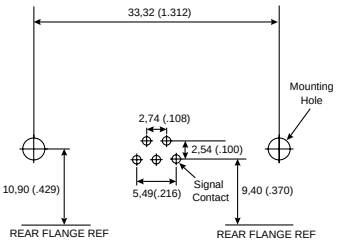


| | |
|---|---|
| Shell Size | A |
| Contact Arrangement | 7W2 |
| No. of Size 20 Cavities | 5 #20 |
| No. of Size 8 Cavities | 0 #8 |

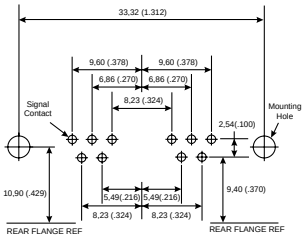


| | |
|---|---|
| Shell Size | A |
| Contact Arrangement | 11W1 |
| No. of Size 20 Cavities | 10 #20 |
| No. of Size 8 Cavities | 0 #8 |

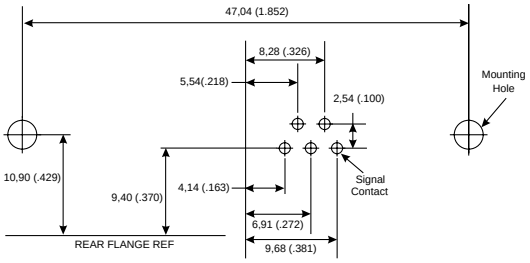


| | |
|---|---|
| Shell Size | B |
| Contact Arrangement | 9W4 |
| No. of Size 20 Cavities | 5 #20 |
| No. of Size 8 Cavities | 0 #8 |

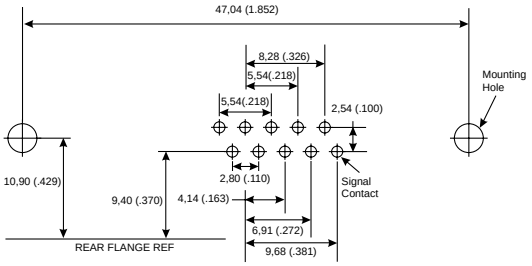


| | |
|---|---|
| Shell Size | B |
| Contact Arrangement | 13W3 |
| No. of Size 20 Cavities | 10 #20 |
| No. of Size 8 Cavities | 0 #8 |

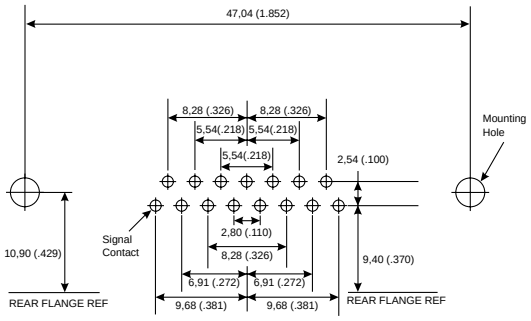


| | |
|---|---|
| Shell Size | B |
| Contact Arrangement | 17W2 |
| No. of Size 20 Cavities | 15 #20 |
| No. of Size 8 Cavities | 0 #8 |

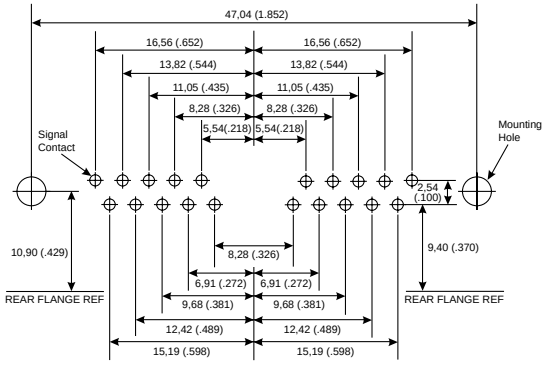


| | |
|---|---|
| Shell Size | B |
| Contact Arrangement | 21W1 |
| No. of Size 20 Cavities | 20 #20 |
| No. of Size 8 Cavities | 0 #8 |

| Signal Contact Ø | Recommended PCB Hole Ø |
|---|---|
| 0,60 (.024) | 1,00 (.039) |

| Mounting Type | Recommended PCB Hole Ø |
|---|---|
| Without Boardlock | 3,05 (.120) |
| With Boardlock | 3,10 (.122) |







Dimensions are shown in mm (inch)
Dimensions subject to change

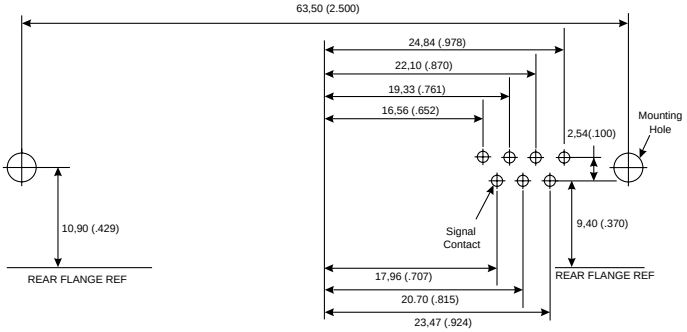


| | |
|---|---|
| Shell Size | C |
| Contact Arrangement | 13W6 |
| No. of Size 20 Cavities | 7 #20 |
| No. of Size 8 Cavities | 0 #8 |

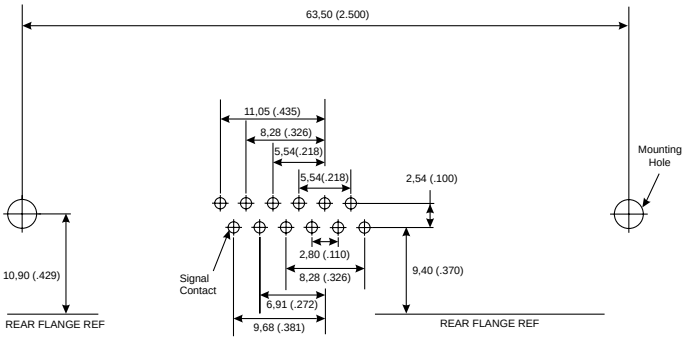


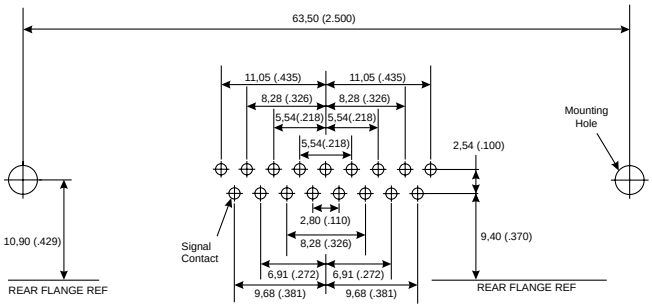


| | | |
|---|---|---|
| Shell Size | C | C |
| Contact Arrangement | 17W5 | 21WA4 |
| No. of Size 20 Cavities | 12 #20 | 17 #20 |
| No. of Size 8 Cavities | 0 #8 | 0 #8 |

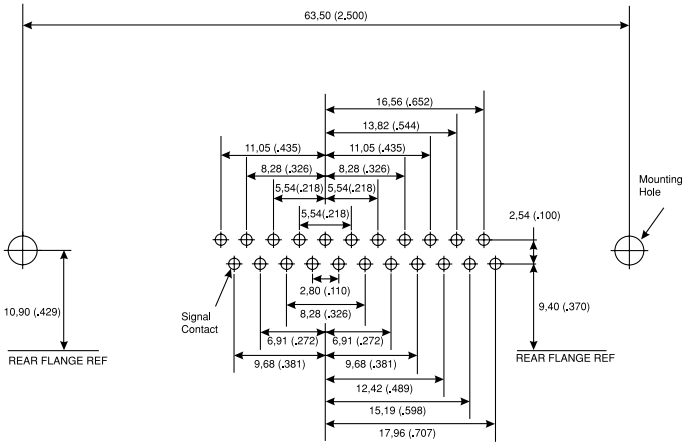


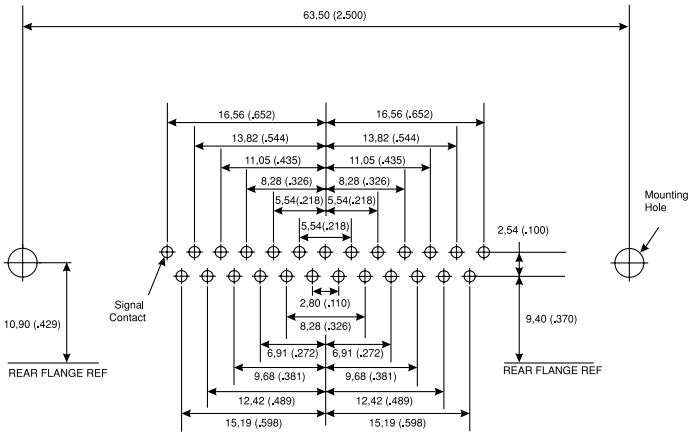


| | | |
|---|---|---|
| Shell Size | C | C |
| Contact Arrangement | 25W3 | 27W2 |
| No. of Size 20 Cavities | 22 #20 | 25 #20 |
| No. of Size 8 Cavities | 0 #8 | 0 #8 |

| Signal Contact Ø | Recommended PCB Hole Ø |
|---|---|
| 0,60 (.024) | 1,00 (.039) |

| Mounting Type | Recommended PCB Hole Ø |
|---|---|
| Without Boardlock | 3,05 (.120) |
| With Boardlock | 3,10 (.122) |

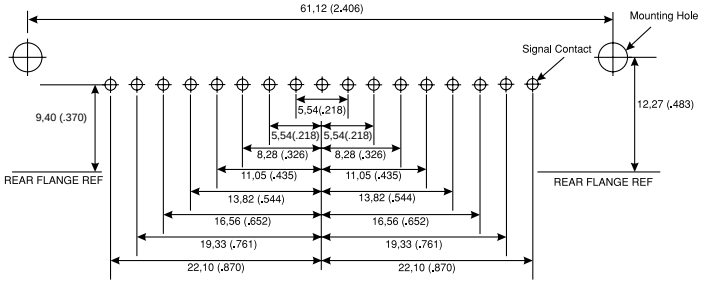


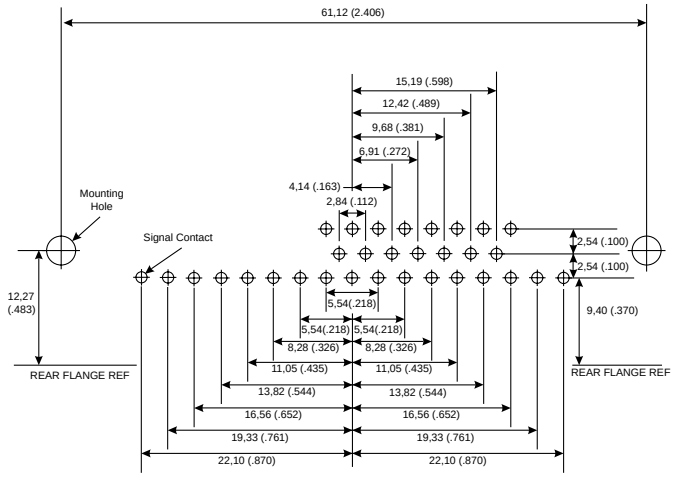


| | | |
|---|---|---|
| Shell Size | D | D |
| Contact Arrangement | 24W7 | 36W4 |
| No. of Size 20 Cavities | 17 #20 | 32 #20 |
| No. of Size 8 Cavities | 0 #8 | 0 #8 |

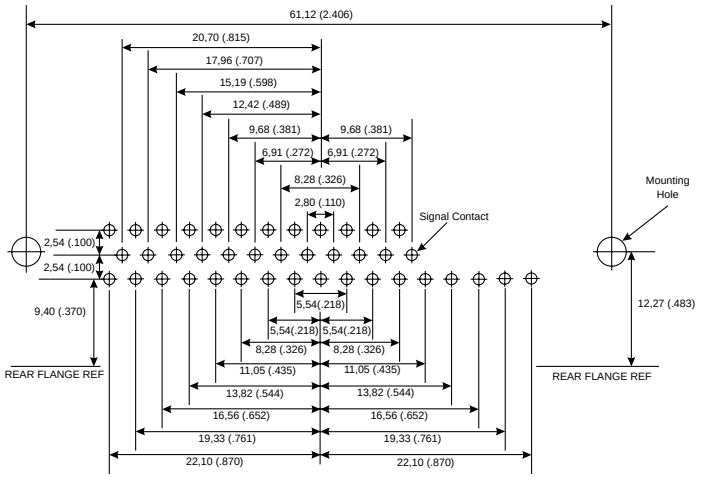


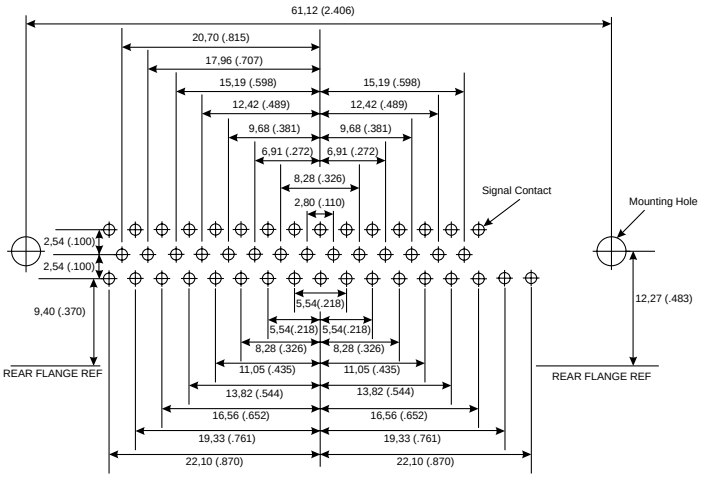


| | | |
|---|---|---|
| Shell Size | D | D |
| Contact Arrangement | 43W2 | 47W1 |
| No. of Size 20 Cavities | 41 #20 | 46 #20 |
| No. of Size 8 Cavities | 0 #8 | 0 #8 |

| Signal Contact Ø | Recommended PCB Hole Ø |
|---|---|
| 0,60 (.024) | 1,00 (.039) |

| Mounting Type | Recommended PCB Hole Ø |
|---|---|
| Without Boardlock | 3,05 (.120) |
| With Boardlock | 3,10 (.122) |







Dimensions are shown in mm (inch)
Dimensions subject to change

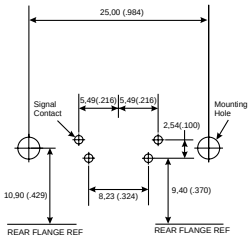


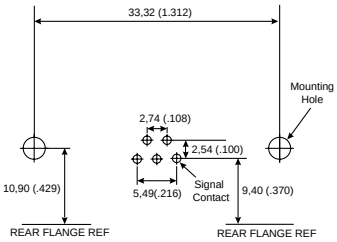


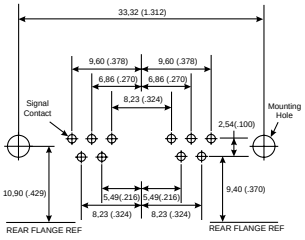


| | | | |
|---|---|---|---|
| Shell Size | E | A | A |
| Contact Arrangement | 5W1 | 7W2 | 11W1 |
| No. of Size 20 Cavities | 4 #20 | 5 #20 | 10 #20 |
| No. of Size 8 Cavities | 0 #8 | 0 #8 | 0 #8 |

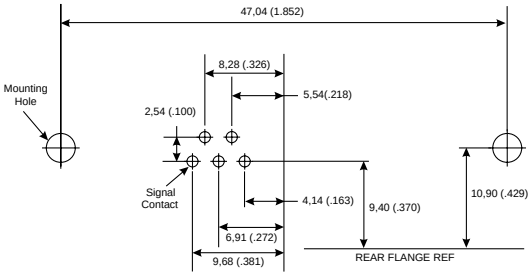


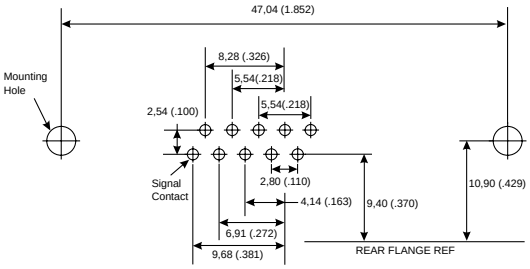


| | | |
|---|---|---|
| Shell Size | B | B |
| Contact Arrangement | 9W4 | 13W3 |
| No. of Size 20 Cavities | 5 #20 | 10 #20 |
| No. of Size 8 Cavities | 0 #8 | 0 #8 |

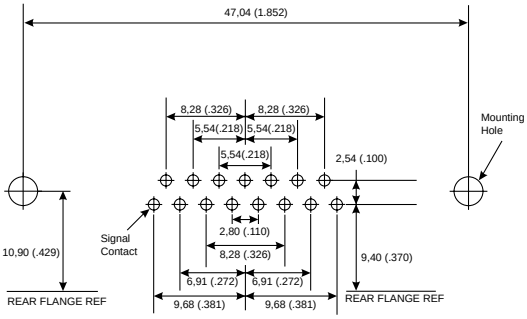


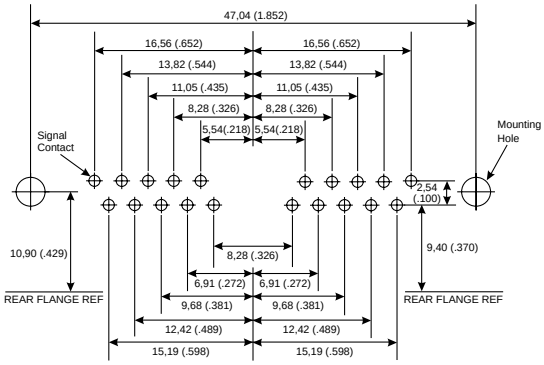


| | | |
|---|---|---|
| Shell Size | B | B |
| Contact Arrangement | 17W2 | 21W1 |
| No. of Size 20 Cavities | 15 #20 | 20 #20 |
| No. of Size 8 Cavities | 0 #8 | 0 #8 |

| Signal Contact Ø | Recommended PCB Hole Ø |
|---|---|
| 0,60 (.024) | 1,00 (.039) |

| Mounting Type | Recommended PCB Hole Ø |
|---|---|
| Without Boardlock | 3,05 (.120) |
| With Boardlock | 3,10 (.122) |

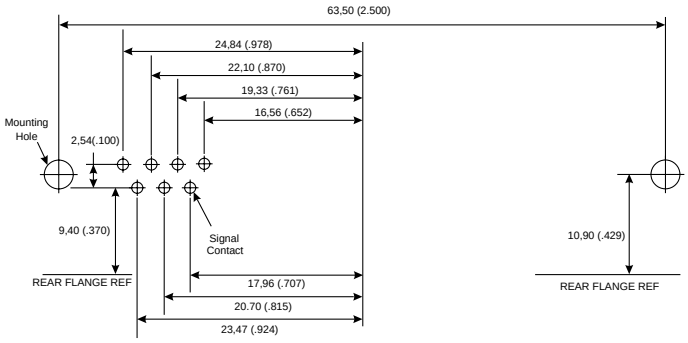


| | |
|---|---|
| Shell Size | C |
| Contact Arrangement | 13W6 |
| No. of Size 20 Cavities | 7 #20 |
| No. of Size 8 Cavities | 0 #8 |

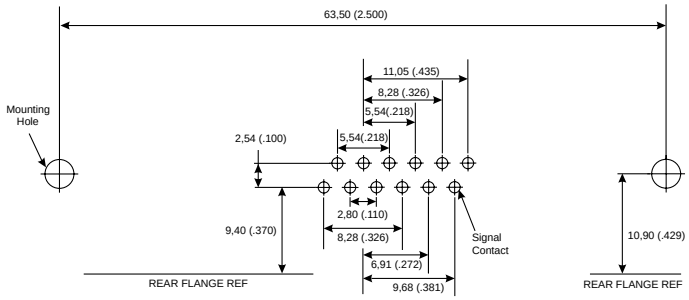


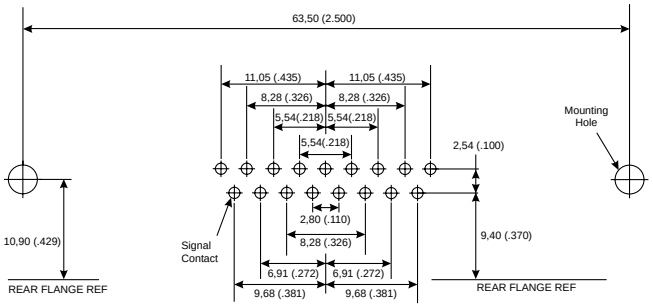


| | | |
|---|---|---|
| Shell Size | C | C |
| Contact Arrangement | 17W5 | 21WA4 |
| No. of Size 20 Cavities | 12 #20 | 17 #20 |
| No. of Size 8 Cavities | 0 #8 | 0 #8 |

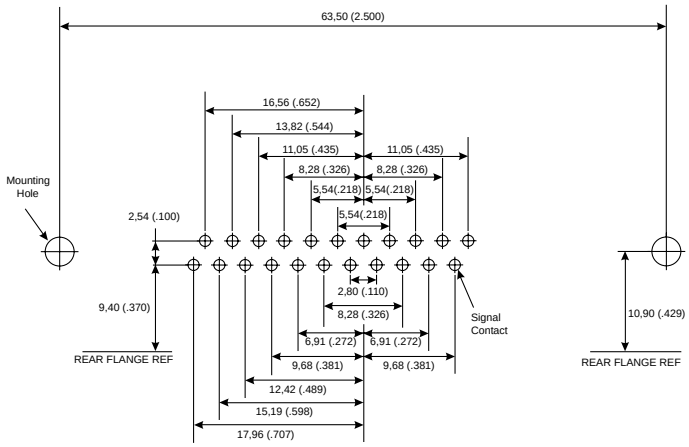


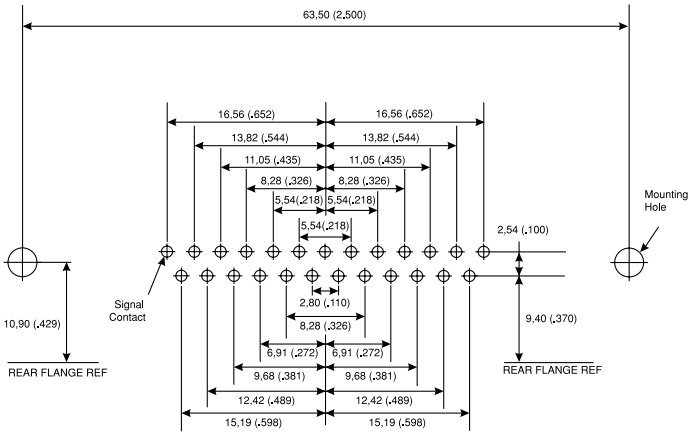


| | | |
|---|---|---|
| Shell Size | C | C |
| Contact Arrangement | 25W3 | 27W2 |
| No. of Size 20 Cavities | 22 #20 | 25 #20 |
| No. of Size 8 Cavities | 0 #8 | 0 #8 |

| Signal Contact Ø | Recommended PCB Hole Ø |
|---|---|
| 0,60 (.024) | 1,00 (.039) |

| Mounting Type | Recommended PCB Hole Ø |
|---|---|
| Without Boardlock | 3,05 (.120) |
| With Boardlock | 3,10 (.122) |







Dimensions are shown in mm (inch)
Dimensions subject to change

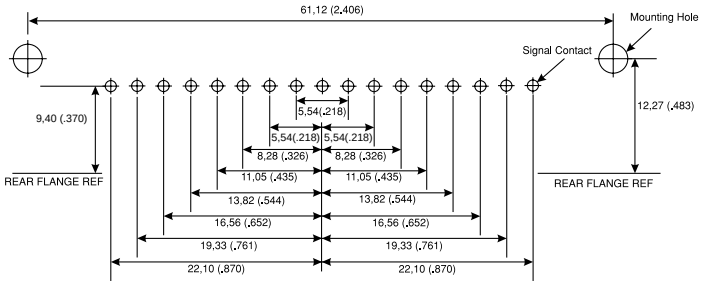


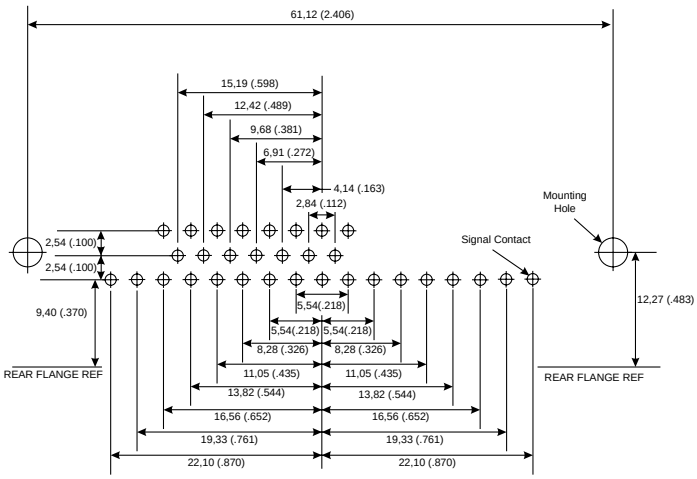


| | | |
|---|---|---|
| Shell Size | D | D |
| Contact Arrangement | 24W7 | 36W4 |
| No. of Size 20 Cavities | 17 #20 | 32 #20 |
| No. of Size 8 Cavities | 0 #8 | 0 #8 |

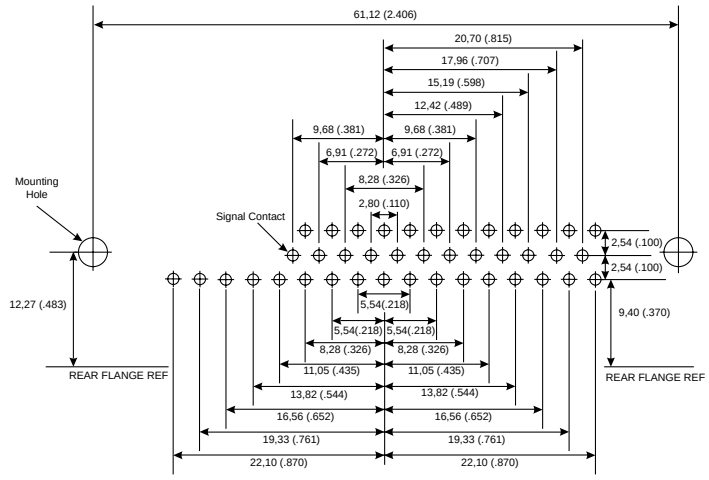


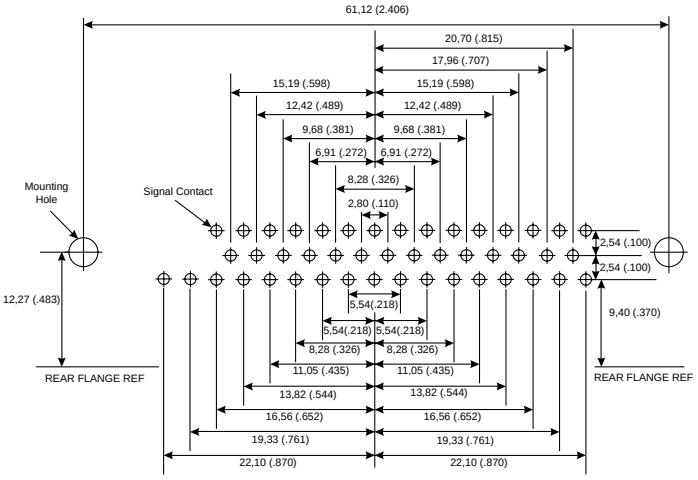


| | | |
|---|---|---|
| Shell Size | D | D |
| Contact Arrangement | 43W2 | 47W1 |
| No. of Size 20 Cavities | 41 #20 | 46 #20 |
| No. of Size 8 Cavities | 0 #8 | 0 #8 |

| Signal Contact Ø | Recommended PCB Hole Ø |
|---|---|
| 0,60 (.024) | 1,00 (.039) |

| Mounting Type | Recommended PCB Hole Ø |
|---|---|
| Without Boardlock | 3,05 (.120) |
| With Boardlock | 3,10 (.122) |

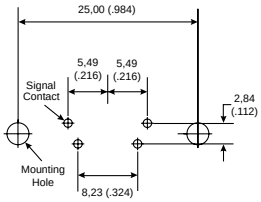


| | |
|---|---|
| Shell Size | E |
| Contact Arrangement | 5W1 |
| No. of Size 20 Cavities | 4 #20 |
| No. of Size 8 Cavities | 0 #8 |

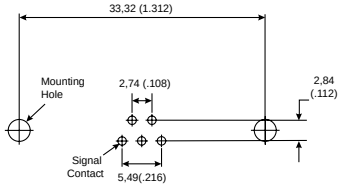


| | |
|---|---|
| Shell Size | A |
| Contact Arrangement | 7W2 |
| No. of Size 20 Cavities | 5 #20 |
| No. of Size 8 Cavities | 0 #8 |

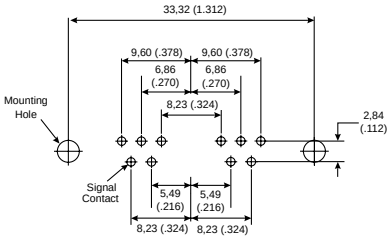


| | |
|---|---|
| Shell Size | A |
| Contact Arrangement | 11W1 |
| No. of Size 20 Cavities | 10 #20 |
| No. of Size 8 Cavities | 0 #8 |

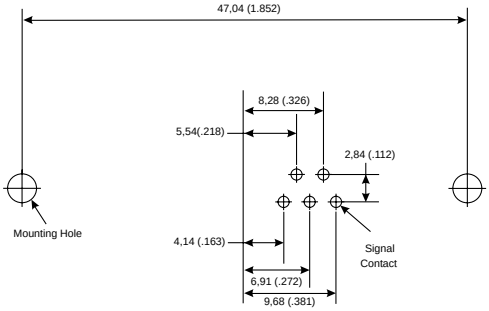


| | |
|---|---|
| Shell Size | B |
| Contact Arrangement | 9W4 |
| No. of Size 20 Cavities | 5 #20 |
| No. of Size 8 Cavities | 0 #8 |

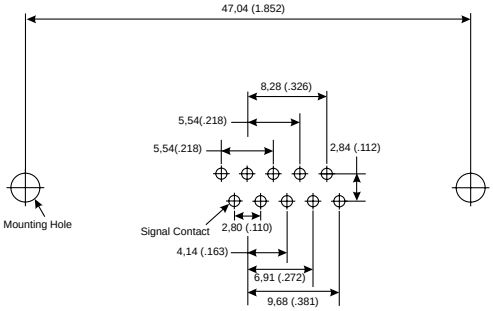


| | |
|---|---|
| Shell Size | B |
| Contact Arrangement | 13W3 |
| No. of Size 20 Cavities | 10 #20 |
| No. of Size 8 Cavities | 0 #8 |

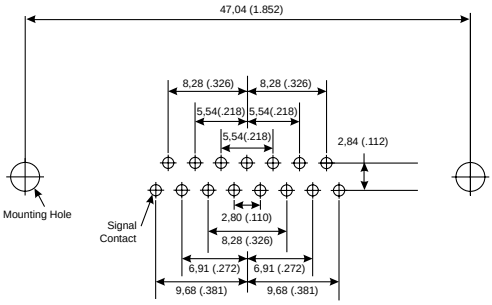


| | |
|---|---|
| Shell Size | B |
| Contact Arrangement | 17W2 |
| No. of Size 20 Cavities | 15 #20 |
| No. of Size 8 Cavities | 0 #8 |

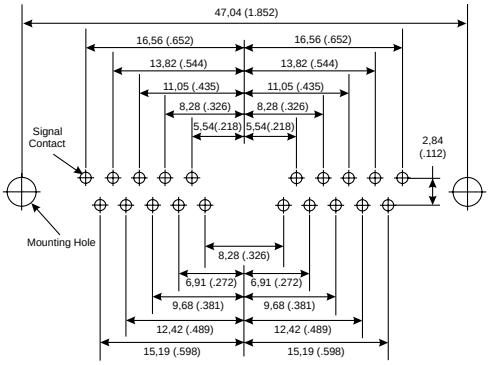


| | |
|---|---|
| Shell Size | B |
| Contact Arrangement | 21W1 |
| No. of Size 20 Cavities | 20 #20 |
| No. of Size 8 Cavities | 0 #8 |

| Signal Contact Ø | Recommended PCB Hole Ø |
|---|---|
| 0,60 (.024) | 1,00 (.039) |

| Mounting Type | Recommended PCB Hole Ø |
|---|---|
| Without Boardlock | 3,05 (.120) |
| With Boardlock | 3,10 (.122) |



Dimensions are shown in mm (inch)
Dimensions subject to change

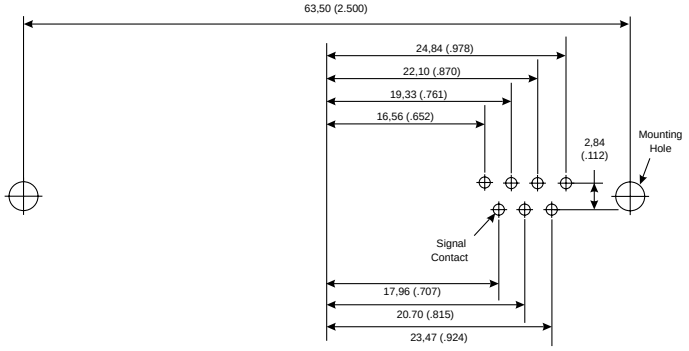


| | |
|---|---|
| Shell Size | C |
| Contact Arrangement | 13W6 |
| No. of Size 20 Cavities | 7 #20 |
| No. of Size 8 Cavities | 0 #8 |

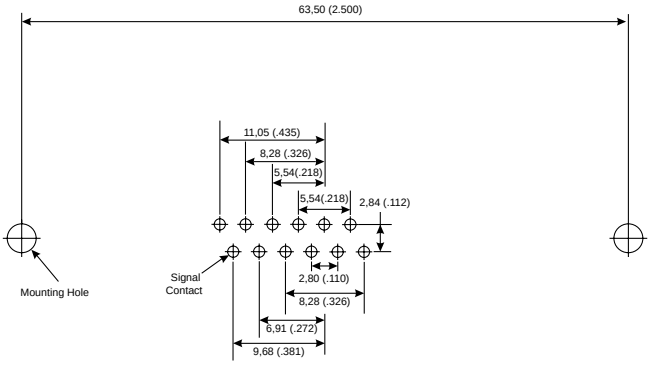


| | |
|---|---|
| Shell Size | C |
| Contact Arrangement | 17W5 |
| No. of Size 20 Cavities | 12 #20 |
| No. of Size 8 Cavities | 0 #8 |

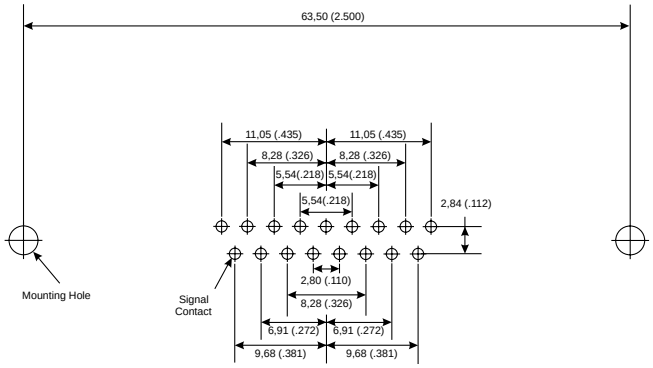


| | |
|---|---|
| Shell Size | C |
| Contact Arrangement | 21WA4 |
| No. of Size 20 Cavities | 17 #20 |
| No. of Size 8 Cavities | 0 #8 |

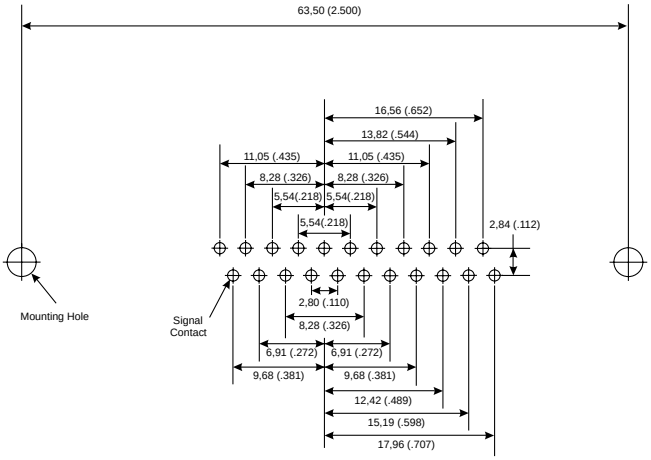


| | |
|---|---|
| Shell Size | C |
| Contact Arrangement | 25W3 |
| No. of Size 20 Cavities | 22 #20 |
| No. of Size 8 Cavities | 0 #8 |

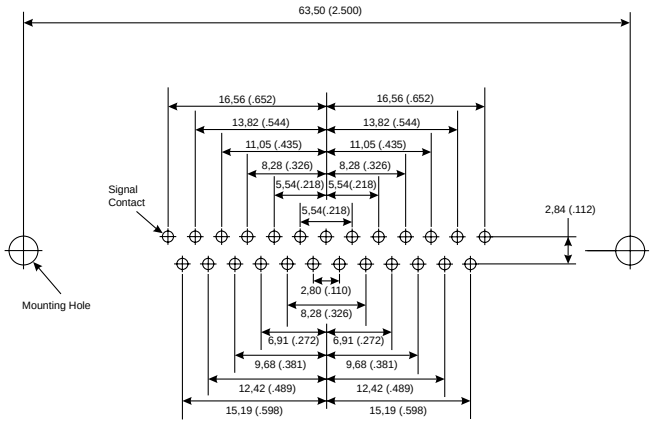


| | |
|---|---|
| Shell Size | C |
| Contact Arrangement | 27W2 |
| No. of Size 20 Cavities | 25 #20 |
| No. of Size 8 Cavities | 0 #8 |

| Signal Contact Ø | Recommended PCB Hole Ø |
|---|---|
| 0,60 (.024) | 1,00 (.039) |

| Mounting Type | Recommended PCB Hole Ø |
|---|---|
| Without Boardlock | 3,05 (.120) |
| With Boardlock | 3,10 (.122) |

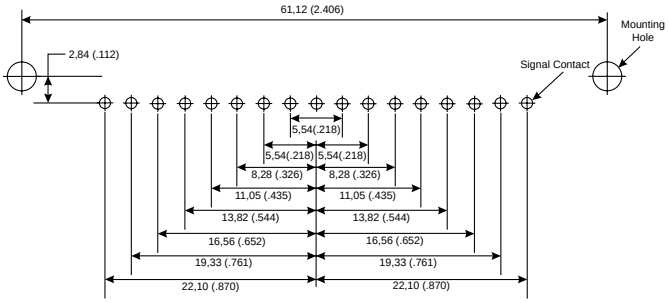


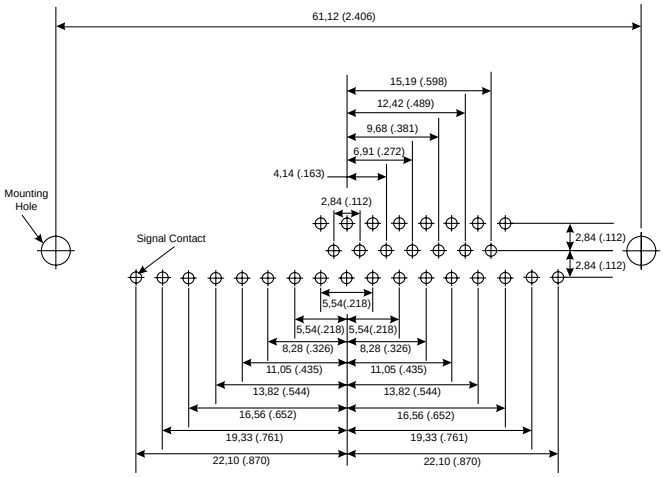


| | | |
|---|---|---|
| Shell Size | D | D |
| Contact Arrangement | 24W7 | 36W4 |
| No. of Size 20 Cavities | 17 #20 | 32 #20 |
| No. of Size 8 Cavities | 0 #8 | 0 #8 |

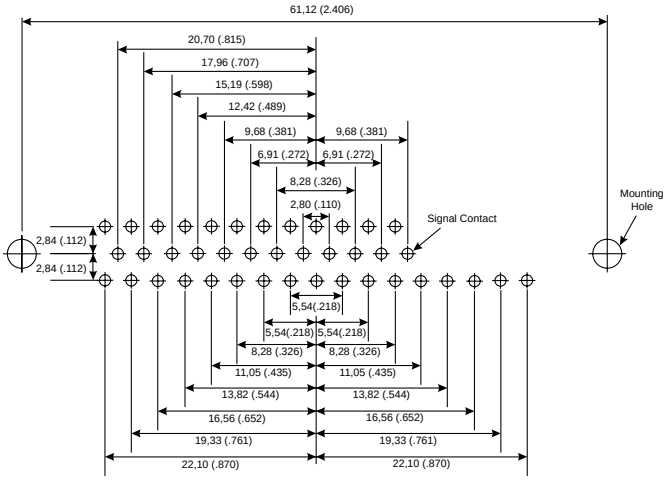


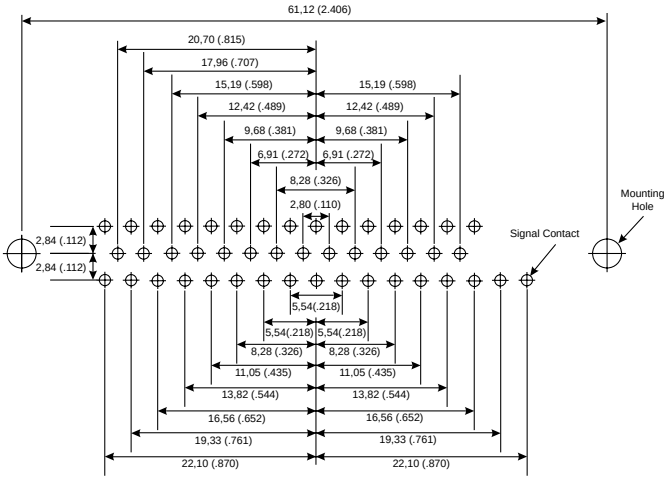


| | | |
|---|---|---|
| Shell Size | D | D |
| Contact Arrangement | 43W2 | 47W1 |
| No. of Size 20 Cavities | 41 #20 | 46 #20 |
| No. of Size 8 Cavities | 0 #8 | 0 #8 |

| Signal Contact Ø | Recommended PCB Hole Ø |
|---|---|
| 0,60 (.024) | 1,00 (.039) |

| Mounting Type | Recommended PCB Hole Ø |
|---|---|
| Without Boardlock | 3,05 (.120) |
| With Boardlock | 3,10 (.122) |



Dimensions are shown in mm (inch)
Dimensions subject to change

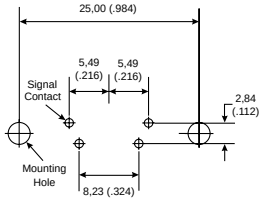


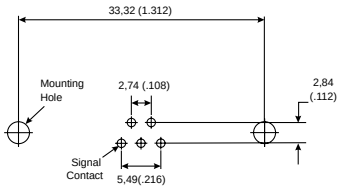


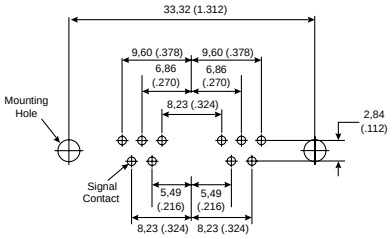


| | | | |
|---|---|---|---|
| Shell Size | E | A | A |
| Contact Arrangement | 5W1 | 7W2 | 11W1 |
| No. of Size 20 Cavities | 4 #20 | 5 #20 | 10 #20 |
| No. of Size 8 Cavities | 0 #8 | 0 #8 | 0 #8 |

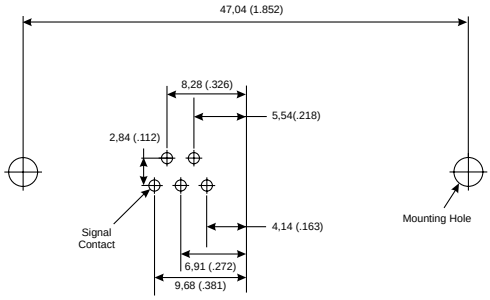


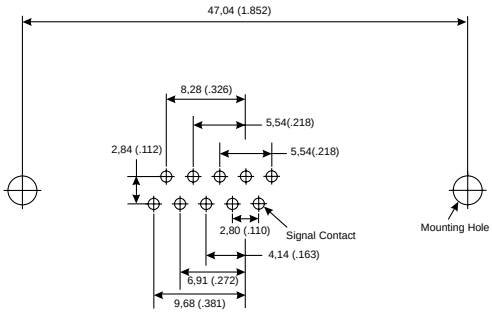


| | | |
|---|---|---|
| Shell Size | B | B |
| Contact Arrangement | 9W4 | 13W3 |
| No. of Size 20 Cavities | 5 #20 | 10 #20 |
| No. of Size 8 Cavities | 0 #8 | 0 #8 |

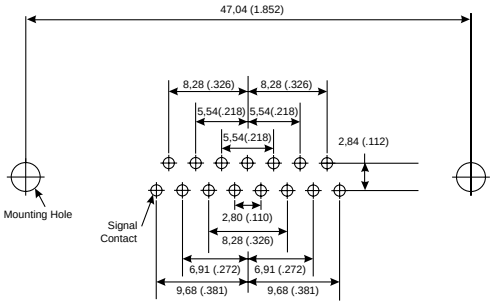


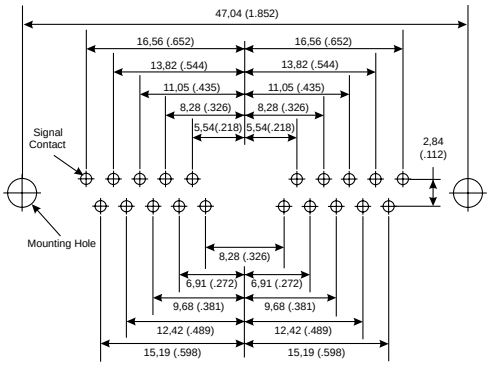


| | | |
|---|---|---|
| Shell Size | B | B |
| Contact Arrangement | 17W2 | 21W1 |
| No. of Size 20 Cavities | 15 #20 | 20 #20 |
| No. of Size 8 Cavities | 0 #8 | 0 #8 |

| Signal Contact Ø | Recommended PCB Hole Ø |
|---|---|
| 0,60 (.024) | 1,00 (.039) |

| Mounting Type | Recommended PCB Hole Ø |
|---|---|
| Without Boardlock | 3,05 (.120) |
| With Boardlock | 3,10 (.122) |

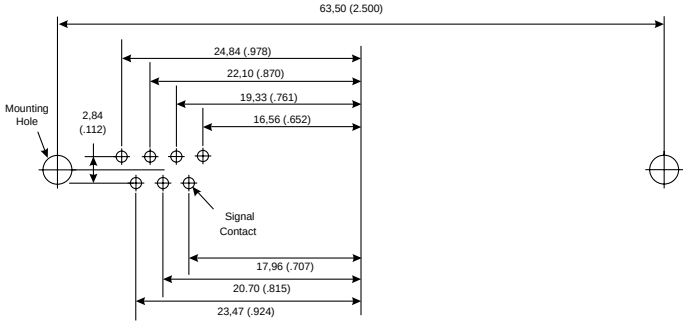


| | |
|---|---|
| Shell Size | C |
| Contact Arrangement | 13W6 |
| No. of Size 20 Cavities | 7 #20 |
| No. of Size 8 Cavities | 0 #8 |

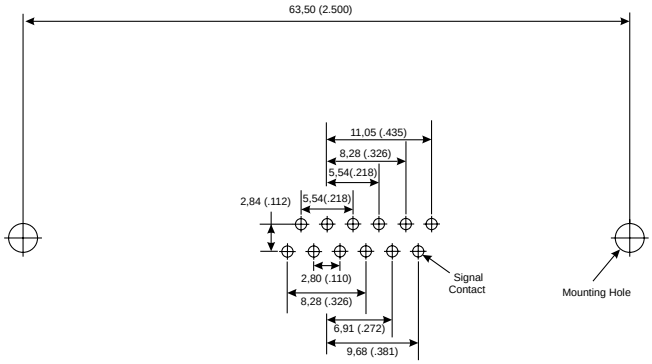


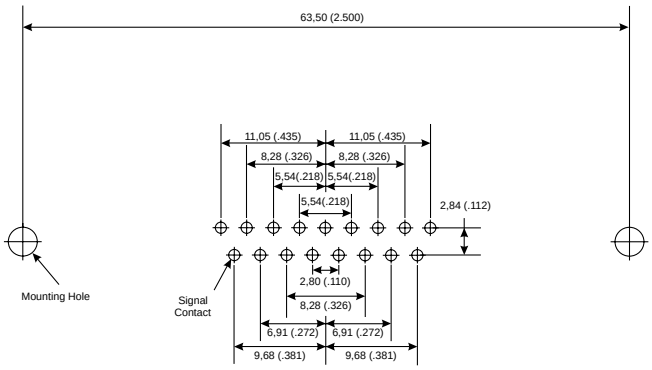


| | | |
|---|---|---|
| Shell Size | C | C |
| Contact Arrangement | 17W5 | 21WA4 |
| No. of Size 20 Cavities | 12 #20 | 17 #20 |
| No. of Size 8 Cavities | 0 #8 | 0 #8 |

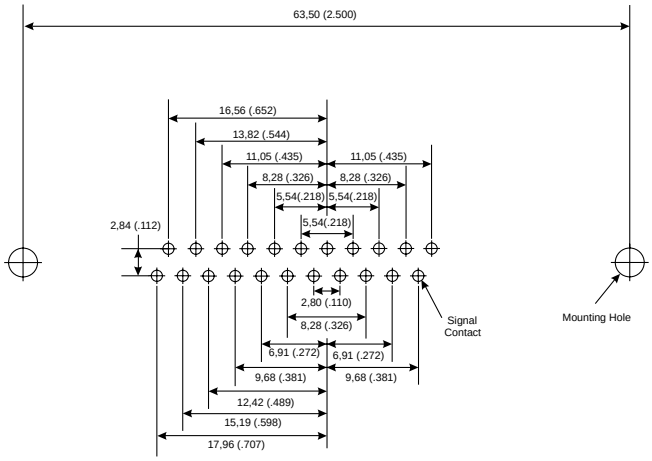


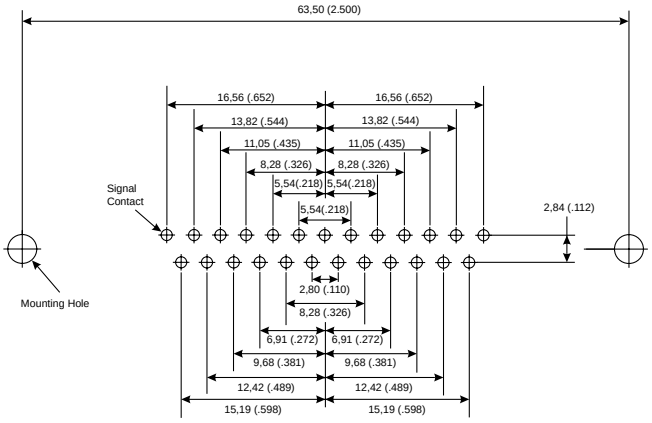


| | | |
|---|---|---|
| Shell Size | C | C |
| Contact Arrangement | 25W3 | 27W2 |
| No. of Size 20 Cavities | 22 #20 | 25 #20 |
| No. of Size 8 Cavities | 0 #8 | 0 #8 |

| Signal Contact Ø | Recommended PCB Hole Ø |
|---|---|
| 0,60 (.024) | 1,00 (.039) |

| Mounting Type | Recommended PCB Hole Ø |
|---|---|
| Without Boardlock | 3,05 (.120) |
| With Boardlock | 3,10 (.122) |



Dimensions are shown in mm (inch)
Dimensions subject to change

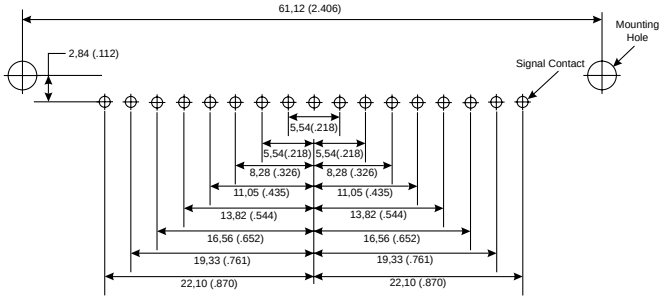


| | |
|---|---|
| Shell Size | D |
| Contact Arrangement | 24W7 |
| No. of Size 20 Cavities | 17 #20 |
| No. of Size 8 Cavities | 0 #8 |

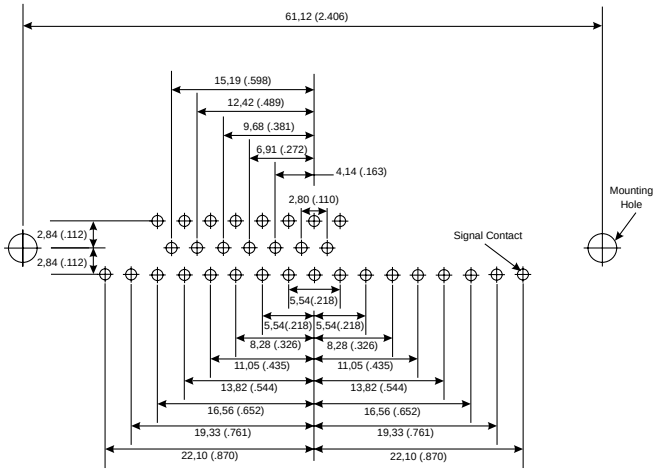


D
36W4
32 #20
0 #8

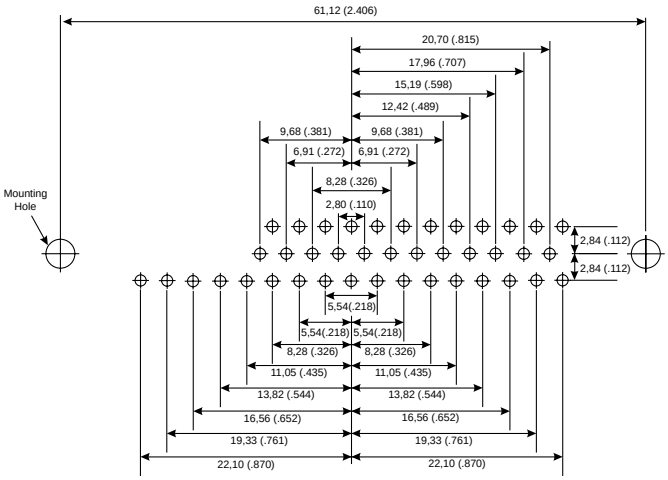


| | |
|---|---|
| Shell Size | D |
| Contact Arrangement | 43W2 |
| No. of Size 20 Cavities | 41 #20 |
| No. of Size 8 Cavities | 0 #8 |

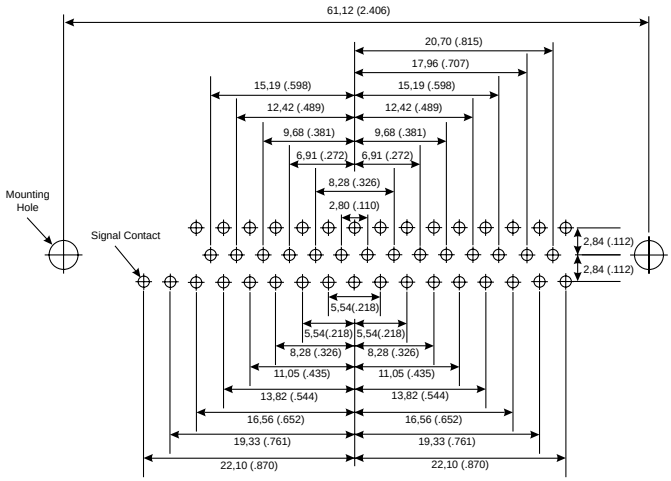


D
47W1
46 #20
0 #8

| Signal Contact Ø | Recommended PCB Hole Ø |
|---|---|
| 0,60 (.024) | 1,00 (.039) |

| Mounting Type | Recommended PCB Hole Ø |
|---|---|
| Without Boardlock | 3,05 (.120) |
| With Boardlock | 3,10 (.122) |

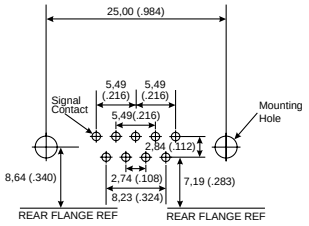


9 Contacts

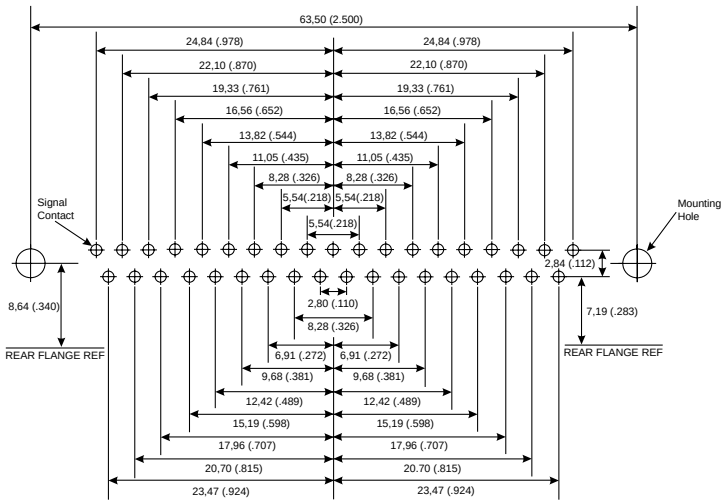


37 Contacts

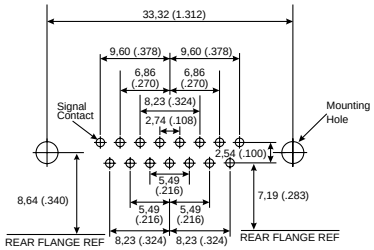


15 Contacts

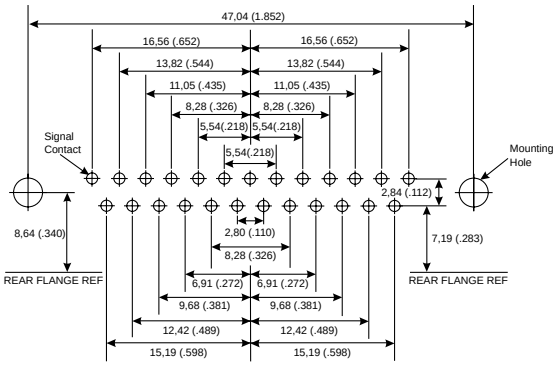


25 Contacts

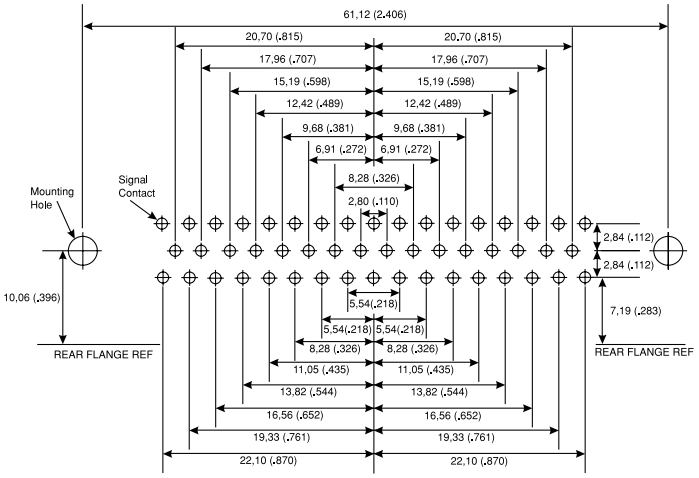


50 Contacts

| Signal Contact Ø | Recommended PCB Hole Ø |
|---|---|
| 0,76 (.030) | 1,14 (.045) |
| 1,00 (.040) | 1,40 (.055) |

| Mounting Type | Recommended PCB Hole Ø |
|---|---|
| Without Boardlock | 3,05 (.120) |
| With Boardlock | 3,10 (.122) |







Dimensions are shown in mm (inch)
Dimensions subject to change

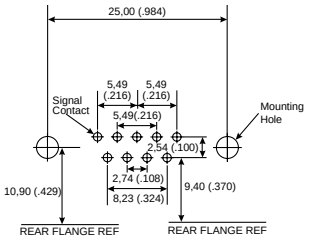


9 Contacts

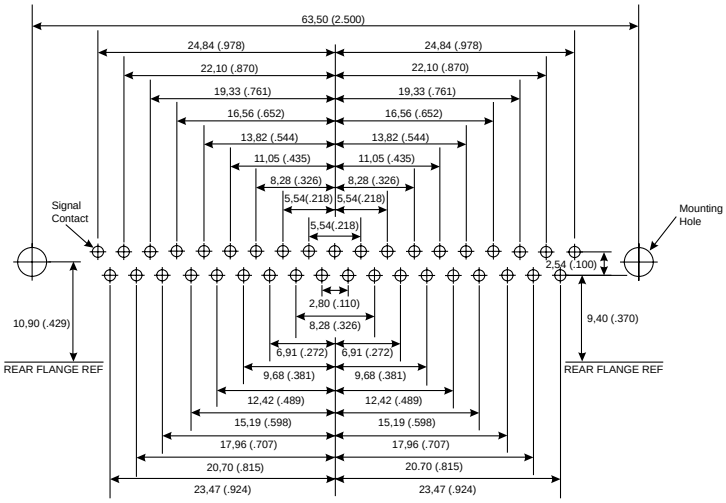


37 Contacts

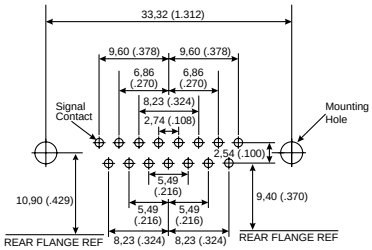


15 Contacts

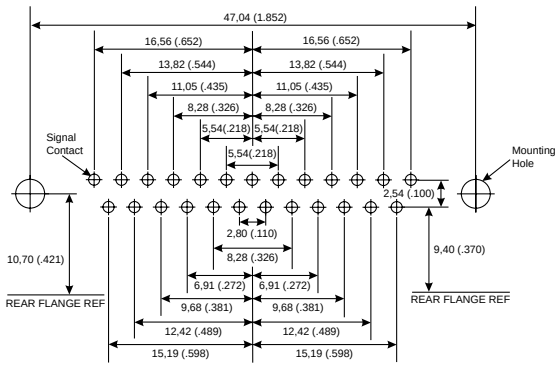


25 Contacts

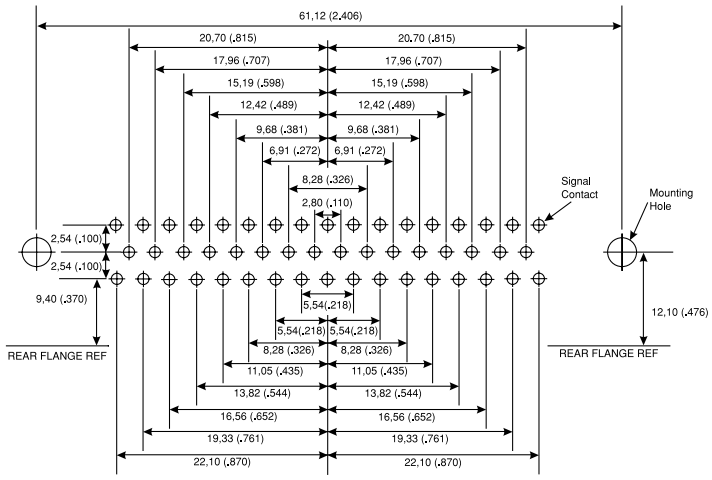


50 Contacts

| Signal Contact Ø | Recommended PCB Hole Ø |
|---|---|
| 0,60 (.024) | 1,00 (.039) |

| Mounting Type | Recommended PCB Hole Ø |
|---|---|
| Without Boardlock | 3,05 (.120) |
| With Boardlock | 3,10 (.122) |

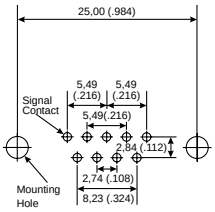


9 Contacts

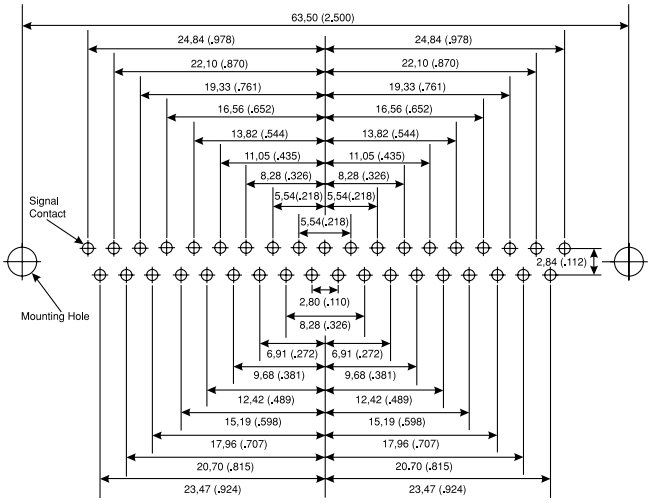


37 Contacts

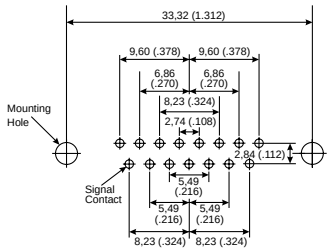


15 Contacts

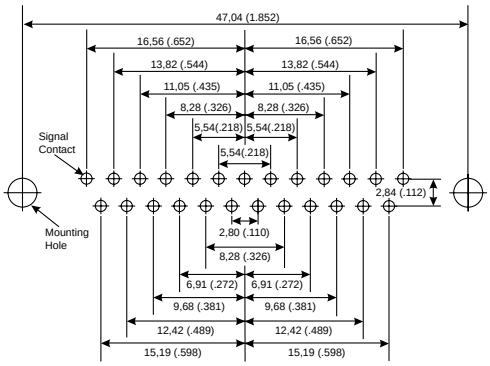


25 Contacts

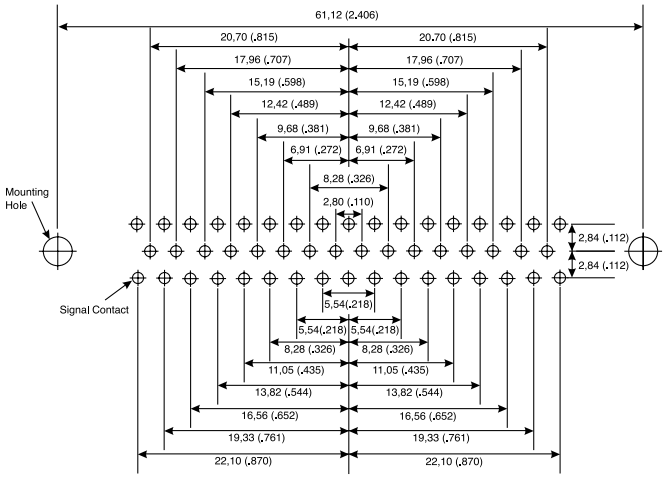


50 Contacts

| Signal Contact Ø | Recommended PCB Hole Ø |
|---|---|
| 0,60 (.024) | 1,00 (.039) |
| 0,76 (.030) | 1,14 (.045) |
| 1,00 (.040) | 1,40 (.055) |

| Mounting Type | Recommended PCB Hole Ø |
|---|---|
| Without Boardlock | 3,05 (.120) |
| With Boardlock | 3,10 (.122) |



Dimensions are shown in mm (inch)
Dimensions subject to change

## ABT-607 Pneumatic Crimper

ABT-607

Products: D*A, MDSM, 75 Ohm Crimp Coax

The ABT-607 is a pneumatic powered and controlled machine. It is designed for customers with moderate volume. This machine is designed to semi-automatically crimp stamped and formed contacts onto pre-stripped stranded or single conductor electrical wire. This machine will accomodate size 34 thru 12 AWG wire and is actuated by the use of a foot pedal.

Machine Crimp Rate: 800 per hour

Power Requirements: Pneumatic = 100 psi, 2 cu. ft. per min.

## ABT-620 UCCS Semi-Automatic Crimper/Stripper

ABT-620 UCCS

Products: D*A, MDSM

The ABT-620 Universal Cannon Crimper/Stripper is a pneumatic powered, microprocessor controlled machine. It is designed to semi-automatically strip insulation from stranded or single conductor electrical wire and attach a stamped and formed contact by crimping. The machine will accommodate 34 thru 12 AWG wire. Primary application of the machine is the termination of jacketed cable where the individual leads cannot be stripped on fully automated equipment. The ABT-620 UCCS operates automatically upon insertion of a wire or it can be switched over to foot pedal operation as desired.

Machine Strip/Crimp Rate: 1200+ per hour

Power Requirements: Electrical = 115 VAC, 60 Hz, 20 A
Pneumatic = 80 psi, 3 cu. ft. per min.

## CBT-646 Vibra-Bowl Crimper

CBT-646

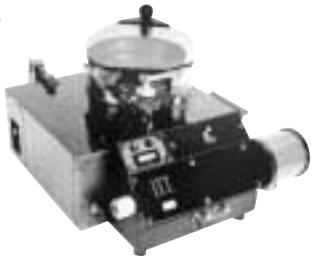

Products: D*MA

The CBT-646, Vibra-Bowl Crimper is a pneumatically powered, electronically controlled machine. It is designed to semi-automatically crimp closed barrel, machined contacts, as used in the aerospace and commercial industries. The machine will accommodate wire sizes 30 thru 12 AWG. The CBT-646 is actuated automatically upon insertion of a pre-stripped stranded or single conductor wire.

Machine Crimp Rate: 1300+ per hour

Power Requirements: Electrical = 115 VAC, 60 Hz, 5 A
Pneumatic = 85 psi, 2 cu. ft. per min.

## Glossary of Terms

*In every job speciality there are certain words and phrases used by the ''insiders'' which after a time become almost a language unique to that speciality. D Subminiature technology is a typical example of that condition.*

*The following pages provide some explanations, in an attempt to clarify some of the terms that are commonly used by engineers and sales staff at ITT Cannon.*

*The list is not comprehensive, but highlights many of the expressions commonly used. Should you have any comments or additions please contact us. Feedback will be appreciated.*

Accelerated Aging — A connector test in which temperature, voltage, current, or other parameters are increased beyond the normal operating values to observe deterioration in a relatively short period of time.

Accessories — Auxiliary devices such as cable clamps, endbells, gaskets, or any number of mechanical hardware devices that can be added to a connector.

Alloy — A composition of two or more elements, of which at least one is a metal. In connector applications it is usually a combination of metals which is used to create an alloy superior in performance to any of its individual components.

Alternating Current — A flow of electricity which reaches a maximum in one direction, decreases to zero, then reverses itself and reaches maximum in the opposite direction. This cycle is repeated continuously. The number of such cycles per second is the frequency. The average value of the voltage during any cycle is zero. Abbreviated ac.

Ambient Temperature — The temperature of the environment surrounding the connector. Usually the air. Normally used as the reference when specifying the OPERATING TEMPERATURE range of the connector.

Ampere — A unit of electrical current or rate of flow of electrons. One volt across one ohm of resistance causes a current of 1 ampere. Abbreviated Amp or A.

Anodize — A protective, insulating oxide layer formed on a metal by electrolytic action. Occasionally used as the outer most layer in connector plating, anodize is a very tough, non-conductive plating.

Attenuation — Power loss in an electrical system, expressed in decibels.

AWG — American Wire Gauge. A standard for wire diameters based on the approximate circular mil area of the wire. As numbers get larger, wire diameters decrease in size (a size 16 AWG wire has a larger diameter than a size 22 AWG).

Backshell — (Also known as Endbell) The outer rear end of the connector which is attached by means of internal threads or screws. It adapts the connector to its wire connections in a variety of ways. Typical backshells might have cable clamps to secure a wire bundle, ridges for heat shrink tubing, pipe threads, or shielded termination mechanisms. Backshells may be straight, 90°, or 45°.

Bandwidth — The range of frequencies within which performance falls within specific limits. Usually the bandwidth is given as an operating range and the operating specifications apply only to that bandwidth, unless otherwise stated.

Bar — A centimeter-gram-second unit of pressure (force exerted on a unit of area) equal to 1,000,000 dynes per square centimeter. Formerly known as microbar. Its symbol is b.

Base Metal — The metal which the connector or connector component is made and over which various platings will be deposited.

Beryllium Copper — An alloy of copper used to make contacts. It is relatively expensive, but has superior spring qualities, is resistant to fatigue, and can operate at higher temperatures than other materials such as phosphor bronze. It is used when numerous insertion and extraction cycles are required.

Body — The main portion of the connector made of the shell, insulator, and contacts.

Boot — A rear accessory, usually made of a resilient material, which is used around a multiconductor cable to add additional insulation, strength, abrasion resistance, or sealing.

Brass — Metal alloy of copper and zinc used for contacts. It is low cost, an excellent conductor, and resists fatigue.

Breakdown — An electrical discharge through a connector insulator or insulation on a wire. A catastrophic failure mode.

Breakdown Voltage — The voltage at which an insulator ruptures.

Breakout — The point at which wires are separated from a multi-conductor cable or wire bundle for routing to other points.

C — Abbreviation for Centigrade, or more properly Celsius, since the term Centigrade was officially abandoned by international agreement in 1948. See CELSIUS.

Cable Assembly — A cable (or bundle of cables) with plugs and/or receptacles on each end.

Cable Clamp — A rear connector clamping accessory which tightens over a cable or wire bundle to provide strain relief to the cable. The cable clamp may be part of a more elaborate endbell or it may be used alone. Some cable clamps also provide cable jacket sealing using a resilient gland; for example the MS3057-C, others provide only strain relief.

Cadmium — A metallic element chemically related to zinc and mercury, widely used for plating. It has an extraordinary ability to resist outdoor corrosion. It is especially resistant to alkali. Cadmium is electrically conductive and it is easy to solder. Its symbol is Cd.

CECC — Abbreviation for Electronic Components Committee of CENELEC, the European committee for Electrotechnical Standardization. CECC uses the IEC test methods, and thus is based upon worldwide standards.

Celsius — A temperature scale in which the freezing point of water is 0° and the boiling point is 100° at normal atmospheric pressure. Formerly known as Centigrade, but officially changed to Celsius by international agreement in 1948.

CEN — Abbreviation for European Committee for Standardization. A European standards group corresponding to the ISO at the European level.

CENELEC — Abbreviation for European Committee for Electrical Standardization. A European standards group corresponding to the IEC at the European level.

Chamfer — A bevel cut on the inside edge of an insulator contact cavity or a mounting hole. In a contact cavity the chamfer is intended to guide the mating pin into the cavity. In a mounting hole it is a countersink to accept a cone shaped bolt.

Characteristic Impedance — The characteristic impedance of a transmission line is the impedance of the line when it is terminated in a perfect load (a load that absorbs all the energy and reflects none, such that VSWR = 1.00).

Clearance Hole — See Through Hole.

Closed Entry — An insulator design which limits the diameter of the mating contacts.

## Glossary of Terms

Closed Socket Contact — A socket contact in which the mating cavity limits the entry of a contact or probe having a diameter larger than the mating pin.

Coax — Abbreviation for coaxial.

Coaxial Cable — A cable that comprises a single copper wire surrounded by insulating material, wire shielding or mesh, and a plastic protective sheath.

Component — An essential functional part of the connector.

Contact — The conductive element in a connector which makes the actual connection between the wire and the mating connector for the purpose of transferring electrical energy. Ideally the contact should add nothing to the circuit. In the real world, however, contacts typically have a small CONTACT RESISTANCE and associated potential drop.

Contact Alignment — The overall play that a contact has in the insulator cavity to allow the mating contacts to self align. Also called contact float.

Contact Arrangement — See LAYOUT.

Contact Cavity — A defined hole in the connector insulator into which the contacts fit. The cavities are generally marked with a unique designation or number for ease of identification.

Contact Resistance — The maximum amount of resistance which a contact introduces into the connection when carrying a specified current (usually stated in milliohms). When not stated, values are typically given for ''Initial'' or ''new'' contacts. Most specifications also limit the maximum resistance during or after each of a series of extreme tests, such as ''Contact Resistance After Corrosion Test''. These figures are typically slightly higher than ''Initial''.

Contact Retention — The maximum allowable axial load which can be applied to a contact from either direction without it being dislodged from the insulator. Usually stated in Newtons or pounds of force.

Contact Separation Force — The force required to separate a pair of mated contacts. Usually stated in Newtons or pounds of force.

Contact Size — This usually relates to the maximum size wire this contact can nominally accommodate. It is based on that AWG size most closely corresponds to the circular mil area of the engaging end of a pin contact for that size. For example, a size 16 contact can accomodate a size 16 AWG wire maximum and the pin corresponds to the CMA of a size 16 AWG. Note, however, that oversized crimp pots are available for some crimp contacts which will allow, for example, a size 16 contact to accommodate a size 14 AWG wire.

Contact Spacing — The distance between the centers of adjacent contacts.

Creepage — The conduction of electricity across the surface of an insulator.

Creepage Distance — The shortest distance between contacts of opposite polarities, or between a live contact and ground, measured over the surface of the insulator.

Creepage Path — A path across the surface of the insulator between two conductors. Lengthening the path reduces the possibility of arc damage.

Crimp — A method of attaching a contact to a wire through the application of pressure.

Crimp Contact — A contact which is terminated to a wire by means of crimping with an appropriate die and tool. After termination, an insertion tool is normally used to insert the crimped contact into the connector. Removable crimp contacts can be FRONT RELEASE or REAR RELEASE. An extraction tool is usually required to remove the contact.

Crosstalk — Undesired electrical currents in conductors caused by electromagnetic or electrostatic coupling from other conductors or from external sources. Also, leakage of optical power from one optical conductor to another.

CSA — Abbreviation for Canadian Standards Association.

Current — The movement of electrons through a conductor. Current is measured in amperes. Its symbol is L.

Current Rating — The maximum current that a particular wire, contact, or connector can accommodate. NOTE: When several wires are used in a single connector or elevated temperature or altitude is involved, derating curves must be applied to these ratings. A typical derating system is MIL-W-5088 which allows the user to calculate the derating effects of current, ambient temperature, number of wires in the bundle, and altitude.

Decibel — A standard unit of measure for transmission gain or loss. It expresses the ratio of power input to power output. Abbreviated dB. The term dBm is used when 1 milliwatt is the reference level.

Derating — To reduce the voltage, current, or power rating of a connector to improve its reliability or to permit operation at high ambient temperatures or altitudes.

Derating Curve — A graph of the change in power handling capability of a connector as a function of ambient temperature or altitude. Typically the graphed function is curved, hence the name.

Diallyl Phthalate — A thermosetting plastic used for insulators and some types of connector housings. It has outstanding resistance to chemicals, excellent dimensional stability, and superior electrical insulating properties.

Dielectric — An insulator used to isolate two conductors having a low loss factor (RF cables). The perfect insulator is a vacuum.

Dielectric Constant — That property (K) of an insulating material which is the ratio of the parallel capacitance (C) of a given configuration of electrodes with the material as the dielectric, to the capacitance of the same electrode configuration with a vacuum as the dielectric.

Digital — A signal comprising discrete elements.

DIN — Abbreviation for Deutsche Industrie Norm, a German standards organization.

Direct Current — An essentially constant value of current that flows in only one direction. Abbreviated dc.

Dust Cap — A cover used in place of a mating connector to seal it against dirt and moisture. Usually secured to the connector by a captive chain, wire, or rope.

Electroplating — To deposit a metal on the surface of a conductor using electrolysis.

EMI/RFI — Electro-Magnetic Interference and Radio Frequency Interference. This is unwanted stray electronic radiation which may enter, and/or be emitted by an electronic system. The most common method of shielding interconnections against this radiation is to use wires with a metallic braided shield and a connector system which will extend the shield through the interconnection. This type of design will keep radiation from entering, or being emitted by the system. Backshells for shielded cable and connectors with threads or grounding fingers are typically used for this purpose. Call for the specific EMI/RFI accommodations of the connectors in this catalog.

## Glossary of Terms

EN — Abbreviation for Euro Norm. A European market-wide product standard.

Endbell — See BACKSHELL.

Extraction Tool — A device used to remove a (removable) contact from a connector insulator. The extraction tool may be inserted into the mating face of the insulator (FRONT RELEASE) or the wire side (REAR RELEASE). In either case, the contact comes out the rear, or wire side, of the connector.

Fahrenheit — A temperature scale in which the freezing point of water is defined as 32° and the boiling point is 212° at normal atmospheric pressure. See the conversion tables for converting Fahrenheit to Celsius. Abbreviated F.

Female Contact — See SOCKET CONTACT.

Ferrule — A bell shaped ring which is placed over a WIRE SEALING GROMMET to provide uniform axial compression of the grommet and to minimize the transmission of torque to the grommet when the backshell is screwed on to the rear of the connector. Ferrules are a part of the sealing mechanism at the rear of a connector. Ferrules are normally a separate component part of the connector although some backshells have integrated ferrules. Ferrules are usually made from a thermoplastic material, but occasionally ferrules are made of metal.

Finish — The metalic coatings used on contacts and metal connectors. These are thin layers of metal designed to improve conductivity, solderability, or to resist corrosion. Typical contact finishes are gold or silver. Typical shell finishes are olive drab over cadmium, electroless nickel, or black anodize.

Flange — A square mounting flange with four mounting holes for bolting the connector to a panel. The mounting holes may be through holes or threaded.

Flanged Receptacle — (Also known as a Box Mount or Wall Mount) The shell of this connector has a square flange with mounting holes at each corner. Mounting holes are usually through holes, but may be threaded. Flanged receptacles can usually be front or rear panel mounted depending upon panel thickness. Some connectors have two different versions, one for front mounting, and one for rear panel mounting.

Flash Plating — As commonly used in connector terminology, flash refers to extremely thin platings of metal, for example: gold flash is a very thin plating of gold. So thin, that the thickness is generally not specified.

Front Mounting — A receptacle that can only be mounted to the front of a panel with its mounting FLANGE outside the equipment.

Front Release — For crimp type removable contacts, front release means that the appropriate extraction tool is *inserted from the front*, or mating face, of the connector. The contact is then pushed out the *rear* (wire side) of the connector.

Gas Tight — The mating of two contact surfaces which are so tight that corrosive gasses can not enter the joint.

Gold — A precious metal that is more conductive than silver or copper. Because it does not corrode and is highly conductive, it is used as plating for contacts. Its chemical symbol is Au.

Grommet Cavity — A defined hole in the WIRE SEALING GROMMET through which the wires are passed. The cavities are generally marked with a unique designation or number for ease of use.

Guide Pin — A special pin which is inserted into a socket contact before the contact can be inserted into the connector insulator. Guide pins provide a rounded surface at the front of the socket and greatly aid in pushing the contact into the insulator thus avoiding damage to both the insulator and the contact. Typically, small size socket contacts require the use of guide pins while larger sizes can be inserted without them.

Harness — A group of wires or cables bundled together with attached connectors and/or components in a preshaped assembly.

Hz — Symbol for Hertz, an international unit of frequency equal to one cycle per second. That is, 20,000 Hz is 20,000 cycles per second.

I/O — Input/Output

IEC — Abbreviation for the International Electrotechnical Commission. An international organization that develops standards exclusively for electrical engineering. CENELEC is the equivalent organization at the European level.

Impedance Match — When a transmission line is terminated so that VSWR = 1.00. Another definition is when a source is terminated in an impedance that allows optimum energy transfer.

Indentor — The part of a crimping die which indents the contact barrel to form the actual crimp. Indentors normally make six or eight multiple indentions for each crimp.

Initial — A test result taken prior to any other environmental testing. For example, contact resistance is frequently specified ''Initial'', that is, with ''new'' contacts. Most specifications also limit the maximum resistance during or after each of a series of extreme tests, such as ''Contact Resistance After Corrosion Test''. These figures are typically slightly higher than ''Initial''.

Insert — See INSULATOR.

Insert Arrangement — See LAYOUT.

Insert Retention Force — The maximum allowable force which should be applied to the face of the insulator without dislodging it from the shell or causing any change in connector performance specifications. Usually stated in Newtons or pounds of force.

Insertion Force — The effort, usually stated in ounces or Newtons, required to engage two contacts or connector halves.

Insertion Loss — The attenuation that results when a transducer is inserted in a transmission line. It is the ratio of the power input to the transducer to the power out of the transducer expressed in decibels.

Insertion Tool — A small, hand-held tool used to insert contacts into a connector.

Insulation — A material that has high electrical resistance and is suitable for covering or encasing electrical components to prevent a short circuit.

Insulation Displacement Connector (IDC) — A connector contact with sharp tines which pierce and displace the wire insulation and make direct electrical connection with the conductor. Normally used with multipin connectors which must be terminated to flat cable. This is a fast, low cost method to terminate many conductors simultaneously.

Insulation Resistance — The minimum resistance (usually stated in Megohms) between adjacent contacts and between the contacts and the shell at a specific voltage. When not stated, values are typically given for new insulators. Most specifications also specify minimum resistance figures during or after each of a series of extreme tests, such as ''Insulation Resistance During Dry Heat''.

Insulation Support — An extended portion at the rear of a crimp contact that is crimped around the wire insulation to provide extra strain relief. This crimp is in addition to the crimp over the conductor which provides the actual electrical termination.

## Glossary of Terms

Insulator — The insulating element into which the contacts are mounted in a connector. This can be a resilient material, thermoplastic, or a thermoset compound, among other materials.

Insulator Rotation — A method of differentiating a circular connector if more than one connector with the same sex and layout is to be used in a system. The insulator is permanently positioned in the shell so that only a connector with the same degree of rotation can be mated with it. Possible rotations are specific to each layout with some layouts having many possible rotations and others having none. A chart of valid rotations is listed by layout for connectors capable of being rotated. Most connector series use the military convention of assigning letter designations for specific degrees of rotation (for example: W, X, Y, Z). See KEYING.

Interchangeable — The characteristic of connectors in which a connector half of one manufacturer or series will directly replace that of another manufacturer and provide the same electrical and mechanical function.

Intermateable — The characteristic of connectors in which a connector half of one manufacturer or series will mate directly with the connector half of another manufacturer.

Intermittent — Occurring at intervals. A connection which passes electrical current only in random or undesirable intervals.

Intermountable — The characteristic of connectors in which one manufacturer's connector or series will mount in exactly the same panel space and mounting holes as another manufacturer's product.

ISO — Abbreviation for the International Standards Organization. A group that operates at the international level and sets most standards for industry, with the exception of electrical engineering and telecommunications which are set by the IEC and ITU respectively. CEN is the equivalent organization at the European level.

Jacket — The outermost layer of insulation in a cable composed of several wires.

Jackscrew — A screw attached to one half of a connector pair used to mechanically align, draw them together, and lock them in place.

Key — A mechanism used to polarize connectors by the user. See KEYING.

Keying — A method of differentiating a connector if more than one connector with the same sex and layout is to be used in a system. The key is usually a pin or other projection which can be located in a contact cavity or slot. The key will prevent a connector without a matching orifice from mating. Keying and POLARIZATION serve the same function, but keying can be done by the user, while polarization is manufactured into the connector and normally can not be altered by the user.

Layout — The number, size, and geometric arrangement of the contacts in a connector. When a connector is said to have a certain ''layout'' it refers to a specific contact configuration. For example, Combo D® has 2 pages of drawings showing the arrangement of the contacts in the insulator. Each of these contact cavity arrangements can be referred to as a layout.

Locator — A part of a crimping tool TURRET. Rotation of the locator sets the tool for a particular size or sex contact. See TURRET.

Male Contact — See PIN CONTACT.

Mating Life — The minimum number of times a connector can be mated and unmated and still meet all of its design specifications. The maximum life may be much higher than this figure.

Mil — One thousandth of an inch (.001). Used in the United States as a unit of length in wire diameters and linear dimensions.

Mil-Spec — Abbreviation for Military Specification.

Milliampere — One one-thousandth (.001) of an ampere. Abbreviated mA.

Millimeter — Metric unit of linear measure. 1 millimeter = .03937 inches. Abbreviated mm.

Milliohm — One one-thousandth (.001) of an ohm. Abbreviated mΩ.

$mm^2$ — Millimeters squared. A standard for wire diameters used in Europe instead of AWG. As numbers get larger, wire diameters increase in size. The relationship between $mm^2$ and AWG is reverse logarithmic. 1 $mm^2$ = 1973 circular mils. A conversion graph is needed to make accurate comparisons between AWG and $mm^2$. Call for assistance.

Mounting Clip — Any of a variety of mounting accessories used to secure a connector or connector pair to a rigid surface.

Multi-Conductor Cable — Two or more individual wires surrounded by a jacketing material.

Nest — The portion of a crimping die that supports the contact barrel during crimping.

Newton — A unit of acceleration. One Newton is the force capable of accelerating 1 kilogram to one meter per second per second. 1 pound force = 4.448221 Newtons. Abbreviated N.

Ohm — The unit of electrical resistance. One ohm is the value of resistance through which a potential difference of one volt will maintain a current of one ampere. Its symbol is the Greek letter omega (Ω).

Operating Temperature — The range of AMBIENT TEMPERATURES over which the connector can operate and still meet all of its design specifications.

Operating Voltage — The range of voltages over which the connector can be operated. Safety precautions must be taken anytime a voltage in excess of 50V is to be used in a circuit. Check your local and national codes for guidelines.

Outgassing — The circumstance in which an insulator releases gasses trapped within it under a vacuum or conditions of decreased pressure, high heat, or both.

Panel — The outside surface of a piece of equipment on to which connectors are mounted. The panel is usually made of metal.

Panel Mount — A connector designed to be mounted on a panel by means of screws or jam nut.

PCB — Abbreviation for Printed Circuit Boards.

Performance Class 1 — Performance class per European specification DIN 41652, specifying contact performance to 500 mating cycles, followed by testing per DIN 41640, Part 21. The contact is subjected to severe environmental conditions, including industrial gasses, after the 500 mating cycles, and must meet basic contact resistance, engaging force, and separation force tests.

Performance Class 2 — Performance class per European specification DIN 41652, specifying contact performance to 200 mating cycles, followed by testing per DIN 41640, Part 21. The contact is subjected to severe environmental conditions, including industrial gasses, after the 200 mating cycles, and must meet basic contact resistance, engaging force, and separation force tests.

## Glossary of Terms

Performance Class 3 — Performance class per European specification DIN 41652, specifying contact performance to 50 mating cycles, followed by testing per DIN 41640, Part 21. The contact is subjected to severe environmental conditions, including industrial gasses, after the 50 mating cycles, and must meet basic contact resistance, engaging force, and separation force tests.

Peripheral Seal — A resilient seal used to keep moisture from entering the connector at the point where the plug and receptacle shells meet. A common method is to use flat gaskets on receptacles and O-rings on plugs.

Phosphor Bronze — An alloy of copper, tin, and phosphorus used to make spring contacts. It is typically used in lower cost contacts where frequent insertions and withdrawals and high temperatures are not a factor.

Pin — A male contact. See PIN CONTACT.

Pin Contact — The contact which has a long shaft at the engagement end which enters the socket contact.

Plating — See FINISH.

Plug — The male portion of a connector pair usually employing a coupling nut to secure it to the receptacle half. A plug may have either pin or socket contacts.

Polarization — A mechanical mechanism that allows connector halves to intermate in only one specific orientation. This can be accomplished by asymmetrical shapes of the two halves as in a D Subminiature connector, insulator rotation, keys, keyways, ramps, or other means. Polarization prevents connectors of the same size and/or same layout from intermating when this is undesirable, such as when two otherwise identical connectors are used on the same panel. Polarization is typically done by the assembler and can not be changed by the user, while keying is typically done by the user with an auxiliary keying device.

Polarizing Pin — A mechanism used to polarize connectors, manufactured into the connector. See KEYING.

Potting — The permanent sealing of a cable to a connector using an insulating material such as potting compound to exclude moisture or provide strain relief. See POTTING CUP.

Potting Compound — A sealing material used in potting to fill a potting cup.

Potting Cup — A bell-shaped (plastic) backshell with an enlarged opening for the wires. After the connector is loaded with wired contacts, the potting cup is attached to the rear of the connector. The inside of the cup is then filled with a potting compound. When the compound hardens, it forms a solid, permanent, watertight mass around the wires.

Potting Ring — A portion of the POTTING CUP which secures the bell shaped cup to the rear of the connector, usually by means of internal threads.

Pre-Tin — To apply tin-lead solder to the contact solder cup and/or conductor prior to soldering the two together.

Rear Mounting — A receptacle that mounts through the panel from the rear, with its mounting flange inside the equipment. Typically, rear mount receptacles are slightly longer than front mount types to allow for the thickness of the panel. Flange mount receptacles usually come in front and rear mount versions. All Jam nut receptacles are rear mount.

Rear Release — For crimp type removable contacts, rear release means that the appropriate extraction tool is *inserted from the rear*, or wire side, of the connector. The contact is then pulled out the rear of the connector.

Receptacle — The connector half that mates with the plug. The receptacle has threads, pins or ramps which engage the coupling nut on the plug, locking the two halves together. A receptacle may have either pin or socket contacts.

REF — Abbreviation for Reference.

Removable Contact — A contact which can be inserted and removed from the insulator by the user. An insertion tool and extraction tool are normally required to insert and remove the contact.

Removal Tool — See EXTRACTION TOOL

Resistance — That property of a substance which impedes current and results in the dissipation of power in the form of heat. The unit of resistance is the ohm.

Return Loss — The ratio of the power reflected from a discontinuity in a transmission line to the power incident.

RFI — See EMI/RFI.

Root Mean Square — The square root, of the average of the squares, of the values of a periodic quantity (like alternating current), taken through one complete period. It is the effective quantity of a periodic quantity. Abbreviated rms.

Salt Spray Test — A test, or series of tests, in which mated and/or unmated connectors are subjected to salt water under specified conditions. Used to test the connector's resistance to corrosion and any associated degradation in electrical function.

Screw Machine Contact — A contact made from a solid bar or rod using screw machine operations. Some screw machine contacts include secondary elements which are welded, crimped, or formed around the basic screw machined part to complete the contact.

Selective Plating — The application of metal PLATING to selective areas of the contact, particularly those areas subject to wear. Precious metal platings may be applied selectively to those contact surfaces responsible for the electrical connection, reducing the contact cost without sacrificing electrical performance.

Shell — The outside case of a connector into which the insulator and contacts are situated.

Shell Size — A standard system developed for military circular connectors for indicating the diameter of the shell. The system is based upon 1/16″ increments, that is, a size 16 shell is one inch in diameter.

Shield Effectiveness — The ability of a shield to screen out undesirable signals.

Shock — An abrupt impact applied to a stationary object. It is usually expressed in gravities (g).

Socket — A female contact. See SOCKET CONTACT.

Socket Contact — The contact which has an opening at the engagement end to accept the pin contact.

Solder Contact — A contact which is terminated to the wire with solder. Solder contacts are normally bonded into the insulator and can not be removed by the user. The alternative is crimp contacts to which a wire is attached by crimping. Crimp contacts can usually be inserted and removed by the user.

Solder Cup — The end of a SOLDER CONTACT is designed to accept a wire which will then be soldered to the contact.

Stamped and Formed Contact — Contacts made by stamping and forming a sheet of metal rather than by machining metal stock. Also see SCREW MACHINE CONTACTS.

## Glossary of Terms

Star Clip — One of several designs used for screw machine socket contacts. A tiny plated star shaped clip is captivated inside a solid barrel into which the pin contact fits. The clip creates a multi-point area of mechanical and electrical continuity between the mated contacts.

Stripper — A tool to remove insulation from a wire.

Test Voltage — The range of voltages over which the connector has been tested per the perimeters in the applicable specification.

Thermoplastic — A plastic material that can be softened by heat and rehardened into a solid state by cooling. This process can be accomplished using a variety of techniques.

Thermoset — A plastic material which hardens when heat and pressure are applied. Unlike thermoplastic, it cannot be remelted or remolded.

Through Hole — (Also known as a clearance hole) A mounting hole without threads.

Turret — An interchangeable device which is attached to a CRIMP TOOL that allows the tool to crimp a range of contacts. Each turret is made to crimp a specific style contact or a range of contacts and/or wire gauges. See LOCATOR.

UL — Abbreviation for Underwriter's Laboratories, a corporation supported by a group of underwriters for the purpose of establishing safety standards covering certain types of equipment and components in the United States.

UL 94V-O — A flammability performance rating set by Underwriter's Laboratories for plastics.

V — Symbol for volt.

Vac — Volts, alternating current.

Vdc — Volts, direct current.

Vibration — A continuously reversing change in the magnitude of a given force.

Volt — The unit of measurement of electromotive force. It is equivalent to the force required to produce a current of 1 ampere through a resistance of one ohm.

Voltage — The force which causes current to flow through an electrical conductor. Its symbol is E. The greatest effective difference in potential between and two conductors of a circuit.

Voltage Drop — The difference in voltage between two points in a circuit due to the loss of electrical pressure as a current flows through an impedance.

Voltage Rating — The maximum voltage which a connector can sustain without breaking down or varying from design specifications.

Voltage Standing Wave Ratio — If a signal is sent down a transmission line any discontinuity will send a reflection back in the opposite direction.

Wire Sealing Grommet — A resilient disc with holes in it to accommodate the individual wires entering the rear of the connector. Each cavity forms a tight seal against the wire insulation (as long as wires within the specified diameter are used). The grommet seals the back of the connector against moisture, dirt, and air. The grommet is normally held in place and compressed by a backshell and/or ferrule. It is usually a separate component, but may be part of the insulator itself. Also see GROMMET CAVITY.

Wire Size — A numerical designation for conductor diameter. This catalog uses American Wire Gauge (AWG) which is based on the approximate circular mil area of the wire. See AWG and $mm^2$.

Wrap Post Contact — A type of contact which is terminated by wrapping wire around a post in a manner that deforms the wire and creates a gas-tight connection between the wire and the post. This method is slow and labor intensive. If used at all, it is used in prototype work.

## Obsolete Products

General Application Connectors♦

| | |
|---|---|
| D*C | *Burgun D* with snap-in, rear release machined or stamped crimp contacts. Refer to D*U products. |
| D*P | 90° connectors for I/O applications, UL 94V-0 rated. Refer to D*U products |
| D*PF | Straight and 90° PCB applications, UL 94V-0 rated. Refer to D* products. |
| AD* | Part number change only. Refer to ZD* products. |
| D*11148 D*(SMT) | SMT – Surface Mount D, no replacement, only through holes available. Refer to ZED* products. |
| D*P1 | Machined pressfit replaced by stamped pressfit. Refer to D*NG products. |
| D*TC | Part number change only. Refer to D* products. |

## Available Products Not Listed Within This Publication

General Application Connectors♦

| | |
|---|---|
| D*U | *Burgun D* with snap-in, rear release machined or stamped crimp contacts, UL 94V-0 rated. |
| D*SF | *Speedy D* for IDC ribbon cable, UL 94V-0 rated, accomodates Sizes 28-26 AWG cable on 1,27 (.050) conductor spacing. |
| D*MA | Military specification quality removable crimp style contacts for high performance applications. |
| ZD*A | Low cost, stamped contacts, high density 90° PCB connectors. |

Special Application Connectors♦♦

| | |
|---|---|
| GD* | *Grommet D* environmentally sealed, crimp, snap-in, rear release contacts. |
| D*D | Environmentally sealed, cast aluminium shell. Product not intermatable with M24308 type D Subminiature connectors. |

♦ Commercial Applications Only

♦♦ Military or Commercial Applications

Consult factory for details.





Dimensions are shown in mm (inch)
Dimensions subject to change

| Part Number | Page |
|---|---|
| 015-8755-000 | 207 |
| 015-8755-001 | 207 |
| 030-2042-002 | 195 |
| 030-2487-016 | 83 |
| 030-2487-017 | 83 |
| 030-2488-016 | 83 |
| 030-2488-017 | 83 |
| 030-8848-020 | 187, 195 |
| 030-8882-002 | 187, 195 |
| 031-1007-052-05 | 195 |
| 031-1147-002 | 195 |
| 031-8787-020 | 187, 195 |
| 031-8843-001 | 187, 195 |
| 031-8902-000 | 195 |
| 031-8902-001 | 187 |
| 031-8944-000 | 187, 195 |
| 070051-0000 | 89 |
| 070064-0002 | 88 |
| 075-0354-003 | 218 |
| 110238-1012 | 84 |
| 110238-1013 | 84 |
| 110238-1014 | 84 |
| 110238-1015 | 84 |
| 248-2967-000 | 95 |
| 249-2271-000 | 84 |
| 249-2272-000 | 84 |
| 250-8501-004 | 201 |
| 250-8501-009 | 201 |
| 250-8501-010 | 201 |
| 250-8501-013 | 201 |
| 259-8760-000 | 207 |
| 274-5016-002 | 187 |
| 274-7003-000 | 187 |
| 274-7048-000 | 187 |
| 304-0444-000 | 84 |
| 304-8810-000 | 40, 82 |
| 304-8811-000 | 40, 82 |
| 304-8812-000 | 40, 82 |
| 304-8813-000 | 40, 82 |
| 323-7010-000 | 187 |
| 330-5291-081-02 | 195 |
| 330-8753-101 | 41 |
| 330-8753-102 | 41 |
| 330-8753-103 | 41 |
| 330-8754-101 | 41 |
| 330-8754-102 | 41 |
| 330-8754-103 | 41 |
| 330-8782-001 | 187, 195 |
| 330-8944-000 | 195 |
| 330-8944-001 | 187 |
| 980-0005-722 | 187 |
| 980-0008-135 | 83 |
| 980-0008-136 | 83 |
| 980-2000-345 | 202 |
| 980-2000-346 | 202 |
| 980-2000-347 | 202 |
| 980-2000-348 | 202 |
| 980-2000-349 | 202 |
| 980-2000-426 | 187 |
| 980-2000-858 | 209 |
| 980-2000-859 | 209 |
| 980-2000-860 | 211 |
| 980-2000-923 | 83 |
| 980-2000-924 | 83 |
| 980-2000-925 | 83 |
| 980-2000-926 | 83 |
| 980-2000-943 | 83 |
| 980-2000-944 | 83 |
| 980-2000-945 | 83 |
| 980-2000-946 | 83 |
| 995-0001-244 | 187 |
| 995-0001-325 | 187 |
| 995-0001-584 | 187 |
| 995-0001-585 | 187 |
| 995-0001-604 | 187 |
| 995-0001-739 | 187 |
| 995-0001-761 | 85 |
| 995-2000-000 | 83 |
| 995-2000-092 | 211 |
| 995-2000-094 | 84 |
| 995-2000-110 | 85 |
| ABT-607 | 84 |
| CA111972-11 | 98 |
| CA111972-12 | 98 |
| CA111972-22 | 98 |
| CA112104 | 102 |
| CA112104-1 | 102 |
| CA112104-2 | 102 |
| CA112104-3 | 102 |
| CA112104-4 | 102 |
| CA112104-5 | 102 |
| CCTP-750HM | 84 |
| CCTP-DM | 84 |
| D110277 | 212 |
| D110278 | 212 |
| D110279 | 212 |
| D110280 | 212 |
| D110550 | 213 |
| D110551 | 213 |
| D115418-70 | 195 |
| D115433-1 | 40, 82 |
| D115433-2 | 40, 82 |
| D115433-3 | 40, 82 |
| D121073-19 | 201 |
| D121073-39 | 209 |
| D121073-40 | 209 |
| D121073-41 | 209 |
| D121073-42 | 209 |
| D130322-1 | 84 |
| D130322-2 | 84 |
| D130322-6 | 84 |
| D130344 | 84 |
| D130344-1 | 84 |
| D130344-2 | 84 |
| D130356 | 85 |
| D130356-1 | 85 |
| D130356-3 | 85 |
| D130357 | 85 |
| D130357-1 | 85 |
| D130357-4 | 85 |
| D20418-101 | 194-195 |
| D20418-2 | 209 |
| D20418-39 | 209 |
| D20418-50 | 209 |
| D20418-52 | 194-195 |
| D20418-70 | 194 |
| D20418-74 | 209 |
| D20418-80 | 209 |
| D20419 | 208 |
| D20419-104 | 208 |
| D20419-18 | 208 |
| D20419-21 | 208 |
| D20419-48 | 194-195 |
| D20419-73 | 194-195 |
| D20419-74 | 194-195 |
| D20419-84 | 194-195 |
| D20420 | 208 |
| D20420-13 | 208 |
| D20420-15 | 208 |
| D20420-49 | 194-195 |
| D20420-63 | 194-195 |
| D20420-67 | 194-195 |
| D20420-86 | 208 |
| D20420-88 | 194-195 |
| DA-59-20 | 195, 218 |
| DA-60-20 | 195, 218 |
| DA111806-1 | 216 |
| DA111806-5 | 216 |
| DA111810 | 216 |
| DA111810-3 | 216 |
| DA115339-1 | 207 |
| DA115339-21 | 205 |
| DA115386-104A | 195 |
| DA115386-2B | 207 |
| DA121073-150 | 200 |
| DA121073-50 | 200 |
| DA15P-0L2-K87 | 10 |
| DA15P-1A5N-K87 | 26 |
| DA15P-1A6N-K87 | 26 |
| DA15P-1A7N-K87 | 22 |
| DA15P-1A8N-K87 | 22 |
| DA15P-1A9N-K87 | 22 |
| DA15P-1ADN-K87 | 24 |
| DA15P-1AFN-K87 | 22 |
| DA15P-1AJN-K87 | 24 |
| DA15P-1AON-K87 | 20 |
| DA15P-1ATN-K87 | 26 |
| DA15P-1AUN-K87 | 26 |
| DA15P-1AVN-K87 | 24 |
| DA15P-1AWN-K87 | 24 |
| DA15P-F179A-K87 | 12 |
| DA15PK87 | 32 |
| DA15S-0L2-A197 | 11 |
| DA15S-1A5N-A197 | 27 |
| DA15S-1A6N-A197 | 27 |
| DA15S-1A7N-A197 | 23 |
| DA15S-1A8N-A197 | 23 |
| DA15S-1A9N-A197 | 23 |
| DA15S-1ADN-A197 | 25 |
| DA15S-1AFN-A197 | 23 |
| DA15S-1AJN-A197 | 25 |
| DA15S-1AON-A197 | 21 |
| DA15S-1ATN-A197 | 27 |
| DA15S-1AUN-A197 | 27 |
| DA15S-1AVN-A197 | 25 |
| DA15S-1AWN-A197 | 25 |
| DA15S-F179A-A197 | 13 |
| DA15SA197 | 33 |
| DA19678-1 | 204 |
| DA19678-157 | 195 |
| DA19678-167 | 193, 195 |
| DA19678-174 | 195 |
| DA19977-1 | 204 |
| DA19977-40 | 193, 195 |
| DA20961 | 203 |
| DA20961-16 | 192 |
| DA22213 | 215 |
| DA22214 | 214 |
| DA24658 | 203 |
| DA24658-15 | 192, 195 |
| DA50905-1 | 218 |
| DA51210 | 206 |
| DA51211 | 206 |
| DA51220-1 | 210 |
| DA53750-1 | 218 |
| DAA11W1PK87F0 | 80 |
| DAA11W1SA197F0 | 81 |
| DAA15PK87F0 | 36 |
| DAA15SA197F0 | 37 |
| DAA3W3PK87F0 | 80 |
| DAA3W3SA197F0 | 81 |
| DAA7W2PK87F0 | 80 |
| DAA7W2SA197F0 | 81 |
| DABS-15 | 205 |
| DABU111512 | 216 |
| DAE15P-0L2-K87-146 | 10 |
| DAE15PK87 | 32 |
| DAE15S-0L2-A197-146 | 11 |
| DAE15SA197 | 33 |
| DAJK15P*-1A0N | 110 |
| DAJK15P*-1A5N | 118 |
| DAJK15P*-1A6N | 118 |
| DAJK15P*-1A7N | 114 |
| DAJK15P*-1A8N | 114 |
| DAJK15P*-1A9N | 114 |
| DAJK15P*-1ADN | 116 |
| DAJK15P*-1AFN | 114 |
| DAJK15P*-1AGN | 116 |
| DAJK15P*-1AHN | 114 |
| DAJK15P*-1AJN | 116 |
| DAJK15P*-1APN | 118 |
| DAJK15P*-1ATN | 118 |
| DAJK15P*-1AUN | 118 |
| DAJK15P*-1AVN | 116 |
| DAJK15P*-1AWN | 116 |
| DAJK15P*-1U0N | 108 |
| DAJK15P*-1U7N | 112 |
| DAJK15P*-1U7N-146 | 112 |
| DAJK15P*-OL4 | 120 |
| DAJK15S*-1A0N | 111 |
| DAJK15S*-1A5N | 119 |
| DAJK15S*-1A6N | 119 |
| DAJK15S*-1A7N | 115 |
| DAJK15S*-1A8N | 115 |
| DAJK15S*-1A9N | 115 |
| DAJK15S*-1ADN | 117 |
| DAJK15S*-1AFN | 115 |
| DAJK15S*-1AGN | 117 |
| DAJK15S*-1AHN | 115 |
| DAJK15S*-1AJN | 117 |
| DAJK15S*-1APN | 119 |
| DAJK15S*-1ATN | 119 |
| DAJK15S*-1AUN | 119 |
| DAJK15S*-1AVN | 117 |
| DAJK15S*-1AWN | 117 |
| DAJK15S*-1U0N | 109 |
| DAJK15S*-1U7N | 113 |
| DAJK15S*-1U7N-146 | 113 |
| DAJK15S*-OL4 | 121 |
| DAJKE15P*-1A0N | 110 |
| DAJKE15P*-1U0N | 108 |
| DAJKE15P*-OL4 | 120 |
| DAJKE15P*-OL4-146 | 120 |
| DAJKE15S*-1A0N | 111 |
| DAJKE15S*-1U0N | 109 |
| DAJKE15S*-OL4 | 121 |
| DAJKE15S*-OL4-146 | 121 |
| DAJKX15P*-1A0N | 110 |
| DAJKX15P*-OL4 | 120 |
| DAJKX15P*-OL4-146 | 120 |
| DAJKX15S*-1A0N | 111 |
| DAJKX15S*-OL4 | 121 |
| DAJKX15S*-OL4-146 | 121 |
| DAJT15P | 122 |
| DAJT15S* | 123 |
| DAJT3W3P1 | 128 |
| DAJT3W3P1-1A0N | 124 |
| DAJT3W3P1-OL4 | 126 |
| DAJT3W3P5 | 128 |
| DAJT3W3P5-1A0N | 124 |
| DAJT3W3P5-OL4 | 126 |
| DAJT3W3P6 | 128 |
| DAJT3W3P6-1A0N | 124 |
| DAJT3W3P6-OL4 | 126 |
| DAJT3W3P9 | 128 |
| DAJT3W3P9-1A0N | 124 |
| DAJT3W3P9-OL4 | 126 |
| DAJT3W3S1 | 129 |
| DAJT3W3S1-1A0N | 125 |
| DAJT3W3S1-OL4 | 127 |
| DAJT3W3S5 | 129 |
| DAJT3W3S5-1A0N | 125 |
| DAJT3W3S5-OL4 | 127 |
| DAJT3W3S6 | 129 |
| DAJT3W3S6-1A0N | 125 |
| DAJT3W3S6-OL4 | 127 |
| DAJT3W3S9 | 129 |
| DAJT3W3S9-1A0N | 125 |
| DAJT3W3S9-OL4 | 127 |
| DAJT3WK3P1 | 128 |
| DAJT3WK3P1-1A0N | 124 |
| DAJT3WK3P1-OL4 | 126 |
| DAJT3WK3P5 | 128 |
| DAJT3WK3P5-1A0N | 124 |
| DAJT3WK3P5-OL4 | 126 |
| DAJT3WK3P6 | 128 |
| DAJT3WK3P6-1A0N | 124 |
| DAJT3WK3P6-OL4 | 126 |
| DAJT3WK3P9 | 128 |
| DAJT3WK3P9-1A0N | 124 |
| DAJT3WK3P9-OL4 | 126 |
| DAJT3WK3S1 | 129 |
| DAJT3WK3S1-1A0N | 125 |
| DAJT3WK3S1-OL4 | 127 |
| DAJT3WK3S5 | 129 |
| DAJT3WK3S5-1A0N | 125 |
| DAJT3WK3S5-OL4 | 127 |
| DAJT3WK3S6 | 129 |
| DAJT3WK3S6-1A0N | 125 |
| DAJT3WK3S6-OL4 | 127 |
| DAJT3WK3S9 | 129 |
| DAJT3WK3S9-1A0N | 125 |
| DAJT3WK3S9-OL4 | 127 |
| DAJTE15P | 122 |
| DAJTE15S* | 123 |
| DAJTE3W3P1 | 128 |
| DAJTE3W3P1-1A0N | 124 |
| DAJTE3W3P1-OL4 | 126 |
| DAJTE3W3P5 | 128 |
| DAJTE3W3P5-1A0N | 124 |
| DAJTE3W3P5-OL4 | 126 |
| DAJTE3W3P6 | 128 |

| Part Number | Page |
|---|---|
| DAJTE3W3P6-1A0N | 124 |
| DAJTE3W3P6-OL4 | 126 |
| DAJTE3W3P9 | 128 |
| DAJTE3W3P9-1A0N | 124 |
| DAJTE3W3P9-OL4 | 126 |
| DAJTE3W3S1 | 129 |
| DAJTE3W3S1-1A0N | 125 |
| DAJTE3W3S1-OL4 | 127 |
| DAJTE3W3S5 | 129 |
| DAJTE3W3S5-1A0N | 125 |
| DAJTE3W3S5-OL4 | 127 |
| DAJTE3W3S6 | 129 |
| DAJTE3W3S6-1A0N | 125 |
| DAJTE3W3S6-OL4 | 127 |
| DAJTE3W3S9 | 129 |
| DAJTE3W3S9-1A0N | 125 |
| DAJTE3W3S9-OL4 | 127 |
| DAJTE3WK3P1 | 128 |
| DAJTE3WK3P1-1A0N | 124 |
| DAJTE3WK3P1-OL4 | 126 |
| DAJTE3WK3P5 | 128 |
| DAJTE3WK3P5-1A0N | 124 |
| DAJTE3WK3P5-OL4 | 126 |
| DAJTE3WK3P6 | 128 |
| DAJTE3WK3P6-1A0N | 124 |
| DAJTE3WK3P6-OL4 | 126 |
| DAJTE3WK3P9 | 128 |
| DAJTE3WK3P9-1A0N | 124 |
| DAJTE3WK3P9-OL4 | 126 |
| DAJTE3WK3S1 | 129 |
| DAJTE3WK3S1-1A0N | 125 |
| DAJTE3WK3S1-OL4 | 127 |
| DAJTE3WK3S5 | 129 |
| DAJTE3WK3S5-1AON | 125 |
| DAJTE3WK3S5-OL4 | 127 |
| DAJTE3WK3S6 | 129 |
| DAJTE3WK3S6-1A0N | 125 |
| DAJTE3WK3S6-OL4 | 127 |
| DAJTE3WK3S9 | 129 |
| DAJTE3WK3S9-1A0N | 125 |
| DAJTE3WK3S9-OL4 | 127 |
| DAJTX15P | 122 |
| DAJTX15S* | 123 |
| DAJTX3WKP1-1A0N | 124 |
| DAJTX3W3P1 | 128 |
| DAJTX3W3P1-1A0N | 124 |
| DAJTX3W3P1-OL4 | 126 |
| DAJTX3W3P5 | 128 |
| DAJTX3W3P5-1A0N | 124 |
| DAJTX3W3P5-OL4 | 126 |
| DAJTX3W3P6 | 128 |
| DAJTX3W3P6-1A0N | 124 |
| DAJTX3W3P6-OL4 | 126 |
| DAJTX3W3P9 | 128 |
| DAJTX3W3P9-1A0N | 124 |
| DAJTX3W3P9-OL4 | 126 |
| DAJTX3W3S1 | 129 |
| DAJTX3W3S1-1A0N | 125 |
| DAJTX3W3S1-OL4 | 127 |
| DAJTX3W3S5 | 129 |
| DAJTX3W3S5-1AON | 125 |
| DAJTX3W3S5-OL4 | 127 |
| DAJTX3W3S6 | 129 |
| DAJTX3W3S6-1A0N | 125 |
| DAJTX3W3S6-OL4 | 127 |
| DAJTX3W3S9 | 129 |
| DAJTX3W3S9-1A0N | 125 |
| DAJTX3W3S9-OL4 | 127 |
| DAJTX3WK3P1 | 128 |
| DAJTX3WK3P1-OL4 | 126 |
| DAJTX3WK3P5 | 128 |
| DAJTX3WK3P5-1A0N | 124 |
| DAJTX3WK3P5-OL4 | 126 |
| DAJTX3WK3P6 | 128 |
| DAJTX3WK3P6-1A0N | 124 |
| DAJTX3WK3P6-OL4 | 126 |
| DAJTX3WK3P9 | 128 |
| DAJTX3WK3P9-1A0N | 124 |
| DAJTX3WK3P9-OL4 | 126 |
| DAJTX3WK3S1 | 129 |
| DAJTX3WK3S1-1A0N | 125 |
| DAJTX3WK3S1-OL4 | 127 |
| DAJTX3WK3S5 | 129 |
| DAJTX3WK3S5-1AON | 125 |
| DAJTX3WK3S5-OL4 | 127 |
| DAJTX3WK3S6 | 129 |
| DAJTX3WK3S6-1A0N | 125 |
| DAJTX3WK3S6-OL4 | 127 |
| DAJTX3WK3S9 | 129 |
| DAJTX3WK3S9-1A0N | 125 |
| DAJTX3WK3S9-OL4 | 127 |
| DAM-11W1P-1A0N-K87 | 74 |
| DAM-11W1P-1A7N-K87 | 74 |
| DAM-11W1P-NMB-76 | 195 |
| DAM-11W1P-NMB-77 | 195 |
| DAM-11W1P-NMC-76 | 195 |
| DAM-11W1P-NMC-77 | 195 |
| DAM-11W1P-OL2-K87 | 76 |
| DAM-11W1P-OL4-K87 | 76 |
| DAM-11W1S-1A0N-A197 | 75 |
| DAM-11W1S-1A7N-A197 | 75 |
| DAM-11W1S-NMB-76 | 195 |
| DAM-11W1S-NMB-77 | 195 |
| DAM-11W1S-NMC-76 | 195 |
| DAM-11W1S-NMC-77 | 195 |
| DAM-11W1S-OL2-A197 | 77 |
| DAM-11W1S-OL4-A197 | 77 |
| DAM-15S-NMB-76 | 195 |
| DAM-15S-NMC-76 | 195 |
| DAM-3W3P-1A0N-K87 | 74 |
| DAM-3W3P-1A7N-K87 | 74 |
| DAM-3W3P-NMB-76 | 195 |
| DAM-3W3P-NMC-76 | 195 |
| DAM-3W3P-OL2-K87 | 76 |
| DAM-3W3P-OL4-K87 | 76 |
| DAM-3W3S-1A0N-A197 | 75 |
| DAM-3W3S-1A7N-A197 | 75 |
| DAM-3W3S-NMC-76 | 195 |
| DAM-3W3S-OL2-A197 | 77 |
| DAM-3W3S-OL4-A197 | 77 |
| DAM-3WK3P-1A0N-K87 | 74 |
| DAM-3WK3P-1A7N-K87 | 74 |
| DAM-3WK3P-OL2-K87 | 76 |
| DAM-3WK3P-OL4-K87 | 76 |
| DAM-3WK3S-1A0N-A197 | 75 |
| DAM-3WK3S-1A7N-A197 | 75 |
| DAM-3WK3S-OL2-A197 | 77 |
| DAM-3WK3S-OL4-A197 | 77 |
| DAM-7W2P-1A0N-K87 | 74 |
| DAM-7W2P-1A7N-K87 | 74 |
| DAM-7W2P-NMB-76 | 195 |
| DAM-7W2P-NMB-77 | 195 |
| DAM-7W2P-NMC-76 | 195 |
| DAM-7W2P-OL2-K87 | 76 |
| DAM-7W2P-OL4-K87 | 76 |
| DAM-7W2S-1A0N-A197 | 75 |
| DAM-7W2S-1A7N-A197 | 75 |
| DAM-7W2S-NMB-77 | 195 |
| DAM-7W2S-NMC-76 | 195 |
| DAM-7W2S-OL2-A197 | 77 |
| DAM-7W2S-OL4-A197 | 77 |
| DAM11W1P1A0NNMBK52 | 195 |
| DAM11W1P1A7NNMBK52 | 195 |
| DAM11W1P1A9NNMBK52 | 195 |
| DAM11W1PF179ANMBK52 | 195 |
| DAM11W1PK87 | 78 |
| DAM11W1PNM | 188 |
| DAM11W1PNMBK52 | 195 |
| DAM11W1POL3NMBK52 | 195 |
| DAM11W1S1A0NNMBK52 | 195 |
| DAM11W1S1A7NNMBK52 | 195 |
| DAM11W1S1A9NNMBK52 | 195 |
| DAM11W1SA197 | 79 |
| DAM11W1SF179ANMBK52 | 195 |
| DAM11W1SNM | 189 |
| DAM11W1SNMBK52 | 195 |
| DAM11W1SOL3NMBK52 | 195 |
| DAM15P | 140 |
| DAM15P1A0NNMBK52 | 195 |
| DAM15P1A7NNMBK52 | 195 |
| DAM15P1A9NNMBK52 | 195 |
| DAM15PA | 132 |
| DAM15PB | 136 |
| DAM15PC | 134 |
| DAM15PD | 132 |
| DAM15PE | 136 |
| DAM15PF | 134 |
| DAM15PF179 | 138 |
| DAM15PF179A | 138 |
| DAM15PF179ANMBK52 | 195 |
| DAM15PG | 132 |
| DAM15PH | 136 |
| DAM15PK | 134 |
| DAM15PL | 132 |
| DAM15PLNM | 174 |
| DAM15PM | 136 |
| DAM15PNM | 180 |
| DAM15PNM*1A7N | 178 |
| DAM15PNM*1A9N | 178 |
| DAM15PNM*1AON | 176 |
| DAM15PNMB76 | 195 |
| DAM15PNMB77 | 195 |
| DAM15PNMBK52 | 195 |
| DAM15PNMC76 | 195 |
| DAM15PNMC77 | 195 |
| DAM15POL3NM | 172 |
| DAM15POL3NMBK52 | 195 |
| DAM15PP | 134 |
| DAM15PR | 134 |
| DAM15PS | 132 |
| DAM15PW | 132 |
| DAM15PX | 136 |
| DAM15PZ | 136 |
| DAM15S | 141 |
| DAM15S1A0NNMBK52 | 195 |
| DAM15S1A7NNMBK52 | 195 |
| DAM15S1A9NNMBK52 | 195 |
| DAM15SA | 133 |
| DAM15SB | 137 |
| DAM15SC | 135 |
| DAM15SD | 133 |
| DAM15SE | 137 |
| DAM15SF | 135 |
| DAM15SF179 | 139 |
| DAM15SF179A | 139 |
| DAM15SF179ANMBK52 | 195 |
| DAM15SG | 133 |
| DAM15SH | 137 |
| DAM15SK | 135 |
| DAM15SL | 133 |
| DAM15SLNM | 175 |
| DAM15SM | 137 |
| DAM15SNM | 181 |
| DAM15SNM*1A7N | 179 |
| DAM15SNM*1A9N | 179 |
| DAM15SNM*1AON | 177 |
| DAM15SNMB77 | 195 |
| DAM15SNMBK52 | 195 |
| DAM15SOL3NM | 173 |
| DAM15SOL3NMBK52 | 195 |
| DAM15SP | 135 |
| DAM15SR | 135 |
| DAM15SS | 133 |
| DAM15SW | 133 |
| DAM15SX | 137 |
| DAM15SZ | 137 |
| DAM3W3P-NMC-77 | 195 |
| DAM3W3PK87 | 78 |
| DAM3W3PNM | 188 |
| DAM3W3PNMBK52 | 195 |
| DAM3W3PNMC76 | 195 |
| DAM3W3POL3NMBK52 | 195 |
| DAM3W3S-NMC-76 | 195 |
| DAM3W3SA197 | 79 |
| DAM3W3SNM | 189 |
| DAM3W3SNMB76 | 195 |
| DAM3W3SNMB77 | 195 |
| DAM3W3SNMBK52 | 195 |
| DAM3WK3PK87 | 78 |
| DAM3WK3PNM | 188 |
| DAM3WK3SA197 | 79 |
| DAM3WK3SNM | 189 |
| DAM53512-1405 | 49 |
| DAM7W2P1A0NNMBK52 | 195 |
| DAM7W2P1A7NNMBK52 | 195 |
| DAM7W2P1A9NNMBK52 | 195 |
| DAM7W2PF179ANMBK52 | 195 |
| DAM7W2PK87 | 78 |
| DAM7W2PNM | 188 |
| DAM7W2PNMBK52 | 195 |
| DAM7W2POL3NMBK52 | 195 |
| DAM7W2S-NMC-77 | 195 |
| DAM7W2S1A0NNMBK52 | 195 |
| DAM7W2S1A7NNMBK52 | 195 |
| DAM7W2S1A9NNMBK52 | 195 |
| DAM7W2SA197 | 79 |
| DAM7W2SF179ANMBK52 | 195 |
| DAM7W2SNM | 189 |
| DAM7W2SNMBK52 | 195 |
| DAM7W2SOL3NMBK52 | 195 |
| DAMA15PNM | 182 |
| DAMA15PNMBK52 | 195 |
| DAMA15SNM | 183 |
| DAMA15SNMBK52 | 195 |
| DAMA26PNM | 184 |
| DAMA26SNM | 185 |
| DAMAY15PNM | 182 |
| DAMAY15SNM | 183 |
| DAMAY26PNM | 184 |
| DAMAY26SNM | 185 |
| DAMB-11W1S-NMB-77 | 195 |
| DAMB-15S-NMC-77 | 195 |
| DAMB-7W2S-NMB-76 | 195 |
| DAMB-7W2S-NMB-77 | 195 |
| DAMB15SNMB77 | 195 |
| DAMB15SNMC76 | 195 |
| DAMC11C1PJK87 | 44 |
| DAMC11C1PVK87 | 50 |
| DAMC11C1SJA197 | 45 |
| DAMC11C1SVA197 | 51 |
| DAMC11H1PJK87 | 60 |
| DAMC11H1SJA197 | 61 |
| DAMC11P1PVK87 | 64 |
| DAMC11P1SVA197 | 65 |
| DAMC15PJK87 | 16 |
| DAMC15SJA197 | 17 |
| DAMC3C3PJK87 | 44 |
| DAMC3C3PVK87 | 50 |
| DAMC3C3SJA197 | 45 |
| DAMC3C3SVA197 | 51 |
| DAMC3CK3PJK87TM | 44 |
| DAMC3CK3PVK87TM | 50 |
| DAMC3CK3SJA197TM | 45 |
| DAMC3CK3SVA197TM | 51 |
| DAMC3H3PJK87 | 60 |
| DAMC3H3SJA197 | 61 |
| DAMC3HK3PJK87TM | 60 |
| DAMC3HK3SJA197TM | 61 |
| DAMC3P3PVK87 | 64 |
| DAMC3P3SVA197 | 65 |
| DAMC3PK3PVK87TM | 64 |
| DAMC3PK3SVA197TM | 65 |
| DAMC7C2PJK87 | 44 |
| DAMC7C2PVK87 | 50 |
| DAMC7C2SJA197 | 45 |
| DAMC7C2SVA197 | 51 |
| DAMC7H2PJK87 | 60 |
| DAMC7H2SJA197 | 61 |
| DAMC7P2PVK87 | 64 |
| DAMC7P2SVA197 | 65 |
| DAMD11C1PJK87 | 44 |
| DAMD11C1PVK87 | 50 |
| DAMD11C1SJA197 | 45 |
| DAMD11C1SVA197 | 51 |
| DAMD11H1PJK87 | 60 |
| DAMD11H1SJA197 | 61 |
| DAMD11P1PVK87 | 64 |
| DAMD11P1SVA197 | 65 |
| DAMD15PJK87 | 16 |
| DAMD15SJA197 | 17 |
| DAMD3C3PJK87 | 44 |
| DAMD3C3PVK87 | 50 |
| DAMD3C3SJA197 | 45 |
| DAMD3C3SVA197 | 51 |
| DAMD3CK3PJK87TM | 44 |
| DAMD3CK3PVK87TM | 50 |
| DAMD3CK3SJA197TM | 45 |
| DAMD3CK3SVA197TM | 51 |
| DAMD3H3PJK87 | 60 |
| DAMD3H3SJA197 | 61 |
| DAMD3HK3PJK87TM | 60 |
| DAMD3HK3SJA197TM | 61 |






Dimensions are shown in mm (inch)
Dimensions subject to change

| Part Number | Page |
|---|---|
| DAMD3P3PVK87 | 64 |
| DAMD3P3SVA197 | 65 |
| DAMD3PK3PVK87TM | 64 |
| DAMD3PK3SVA197TM | 65 |
| DAMD7C2PJK87 | 44 |
| DAMD7C2PVK87 | 50 |
| DAMD7C2SJA197 | 45 |
| DAMD7C2SVA197 | 51 |
| DAMD7H2PJK87 | 60 |
| DAMD7H2SJA197 | 61 |
| DAMD7P2PVK87 | 64 |
| DAMD7P2SVA197 | 65 |
| DAME11W1PK87 | 78 |
| DAME11W1SA197 | 79 |
| DAME15P | 140 |
| DAME15S | 141 |
| DAME3W3PK87 | 78 |
| DAME3W3SA197 | 79 |
| DAME3WK3PK87 | 78 |
| DAME3WK3SA197 | 79 |
| DAME7W2PK87 | 78 |
| DAME7W2SA197 | 79 |
| DAMG11C1PJK87 | 44 |
| DAMG11C1PVK87 | 50 |
| DAMG11C1SJA197 | 45 |
| DAMG11C1SVA197 | 51 |
| DAMG11H1PJK87 | 60 |
| DAMG11H1SJA197 | 61 |
| DAMG11P1PVK87 | 64 |
| DAMG11P1SVA197 | 65 |
| DAMG15PJK87 | 16 |
| DAMG15SJA197 | 17 |
| DAMG3C3PJK87 | 44 |
| DAMG3C3PVK87 | 50 |
| DAMG3C3SJA197 | 45 |
| DAMG3C3SVA197 | 51 |
| DAMG3CK3PJK87TM | 44 |
| DAMG3CK3PVK87TM | 50 |
| DAMG3CK3SJA197TM | 45 |
| DAMG3CK3SVA197TM | 51 |
| DAMG3H3PJK87 | 60 |
| DAMG3H3SJA197 | 61 |
| DAMG3HK3PJK87TM | 60 |
| DAMG3HK3SJA197TM | 61 |
| DAMG3P3PVK87 | 64 |
| DAMG3P3SVA197 | 65 |
| DAMG3PK3PVK87TM | 64 |
| DAMG3PK3SVA197TM | 65 |
| DAMG7C2PJK87 | 44 |
| DAMG7C2PVK87 | 50 |
| DAMG7C2SJA197 | 45 |
| DAMG7C2SVA197 | 51 |
| DAMG7H2PJK87 | 60 |
| DAMG7H2SJA197 | 61 |
| DAMG7P2PVK87 | 64 |
| DAMG7P2SVA197 | 65 |
| DAMM11W1P | 166 |
| DAMM11W1S | 167 |
| DAMM15P | 140 |
| DAMM15PA | 132 |
| DAMM15PB | 136 |
| DAMM15PC | 134 |
| DAMM15PD | 132 |
| DAMM15PE | 136 |
| DAMM15PF | 134 |
| DAMM15PF179 | 138 |
| DAMM15PF179A | 138 |
| DAMM15PG | 132 |
| DAMM15PH | 136 |
| DAMM15PK | 134 |
| DAMM15PL | 132 |
| DAMM15PM | 136 |
| DAMM15PP | 134 |
| DAMM15PR | 134 |
| DAMM15PS | 132 |
| DAMM15PW | 132 |
| DAMM15PX | 136 |
| DAMM15PZ | 136 |
| DAMM15S | 141 |
| DAMM15SA | 133 |
| DAMM15SB | 137 |
| DAMM15SC | 135 |
| DAMM15SD | 133 |
| DAMM15SE | 137 |
| DAMM15SF | 135 |
| DAMM15SF179 | 139 |
| DAMM15SF179A | 139 |
| DAMM15SG | 133 |
| DAMM15SH | 137 |
| DAMM15SK | 135 |
| DAMM15SL | 133 |
| DAMM15SM | 137 |
| DAMM15SP | 135 |
| DAMM15SR | 135 |
| DAMM15SS | 133 |
| DAMM15SW | 133 |
| DAMM15SX | 137 |
| DAMM15SZ | 137 |
| DAMM3W3P | 166 |
| DAMM3W3S | 167 |
| DAMM3WK3P | 166 |
| DAMM3WK3S | 167 |
| DAMM7W2P | 166 |
| DAMM7W2S | 167 |
| DAMMC11C1PJ | 146 |
| DAMMC11C1SJ | 147 |
| DAMMC11H1PJ | 154 |
| DAMMC11H1SJ | 155 |
| DAMMC3C3PJ | 146 |
| DAMMC3C3SJ | 147 |
| DAMMC3CK3PJ | 146 |
| DAMMC3CK3SJ | 147 |
| DAMMC3H3PJ | 154 |
| DAMMC3H3SJ | 155 |
| DAMMC3HK3PJ | 154 |
| DAMMC3HK3SJ | 155 |
| DAMMC7C2PJ | 146 |
| DAMMC7C2SJ | 147 |
| DAMMC7H2PJ | 154 |
| DAMMC7H2SJ | 155 |
| DAMMD11C1PJ | 146 |
| DAMMD11C1SJ | 147 |
| DAMMD11H1PJ | 154 |
| DAMMD11H1SJ | 155 |
| DAMMD3C3PJ | 146 |
| DAMMD3C3SJ | 147 |
| DAMMD3CK3PJ | 146 |
| DAMMD3CK3SJ | 147 |
| DAMMD3H3PJ | 154 |
| DAMMD3H3SJ | 155 |
| DAMMD3HK3PJ | 154 |
| DAMMD3HK3SJ | 155 |
| DAMMD7C2PJ | 146 |
| DAMMD7C2SJ | 147 |
| DAMMD7H2PJ | 154 |
| DAMMD7H2SJ | 155 |
| DAMME11W1P | 166 |
| DAMME11W1S | 167 |
| DAMME15P | 140 |
| DAMME15S | 141 |
| DAMME3W3P | 166 |
| DAMME3W3S | 167 |
| DAMME3WK3P | 166 |
| DAMME3WK3S | 167 |
| DAMME7W2P | 166 |
| DAMME7W2S | 167 |
| DAMMG11C1PJ | 146 |
| DAMMG11C1SJ | 147 |
| DAMMG11H1PJ | 154 |
| DAMMG11H1SJ | 155 |
| DAMMG3C3PJ | 146 |
| DAMMG3C3SJ | 147 |
| DAMMG3CK3PJ | 146 |
| DAMMG3CK3SJ | 147 |
| DAMMG3H3PJ | 154 |
| DAMMG3H3SJ | 155 |
| DAMMG3HK3PJ | 154 |
| DAMMG3HK3SJ | 155 |
| DAMMG7C2PJ | 146 |
| DAMMG7C2SJ | 147 |
| DAMMG7H2PJ | 154 |
| DAMMG7H2SJ | 155 |
| DAMMN11C1PN | 150 |
| DAMMN11C1SN | 151 |
| DAMMN11H1PN | 158 |
| DAMMN11H1SN | 159 |
| DAMMN11V1PN | 162 |
| DAMMN11V1SN | 163 |
| DAMMN3C3PN | 150 |
| DAMMN3C3SN | 151 |
| DAMMN3CK3PN | 150 |
| DAMMN3CK3SN | 151 |
| DAMMN3H3PN | 158 |
| DAMMN3H3SN | 159 |
| DAMMN3HK3PN | 158 |
| DAMMN3HK3SN | 159 |
| DAMMN3V3PN | 162 |
| DAMMN3V3SN | 163 |
| DAMMN3VK3PN | 162 |
| DAMMN3VK3SN | 163 |
| DAMMN7C2PN | 150 |
| DAMMN7C2SN | 151 |
| DAMMN7H2PN | 158 |
| DAMMN7H2SN | 159 |
| DAMMN7V2PN | 162 |
| DAMMN7V2SN | 163 |
| DAMMP11C1PJ | 146 |
| DAMMP11C1SJ | 147 |
| DAMMP11H1PJ | 154 |
| DAMMP11H1SJ | 155 |
| DAMMP3C3PJ | 146 |
| DAMMP3C3SJ | 147 |
| DAMMP3CK3PJ | 146 |
| DAMMP3CK3SJ | 147 |
| DAMMP3H3PJ | 154 |
| DAMMP3H3SJ | 155 |
| DAMMP3HK3PJ | 154 |
| DAMMP3HK3SJ | 155 |
| DAMMP7C2PJ | 146 |
| DAMMP7C2SJ | 147 |
| DAMMP7H2PJ | 154 |
| DAMMP7H2SJ | 155 |
| DAMMV11C1PN | 150 |
| DAMMV11C1SN | 151 |
| DAMMV11H1PN | 158 |
| DAMMV11H1SN | 159 |
| DAMMV11V1PN | 162 |
| DAMMV11V1SN | 163 |
| DAMMV3C3PN | 150 |
| DAMMV3C3SN | 151 |
| DAMMV3CK3PN | 150 |
| DAMMV3CK3SN | 151 |
| DAMMV3H3PN | 158 |
| DAMMV3H3SN | 159 |
| DAMMV3HK3PN | 158 |
| DAMMV3HK3SN | 159 |
| DAMMV3V3PN | 162 |
| DAMMV3V3SN | 163 |
| DAMMV3VK3PN | 162 |
| DAMMV3VK3SN | 163 |
| DAMMV7C2PN | 150 |
| DAMMV7C2SN | 151 |
| DAMMV7H2PN | 158 |
| DAMMV7H2SN | 159 |
| DAMMV7V2PN | 162 |
| DAMMV7V2SN | 163 |
| DAMMY11W1P | 166 |
| DAMMY11W1S | 167 |
| DAMMY15P | 140 |
| DAMMY15S | 141 |
| DAMMY3W3P | 166 |
| DAMMY3W3S | 167 |
| DAMMY3WK3P | 166 |
| DAMMY3WK3S | 167 |
| DAMMY7W2P | 166 |
| DAMMY7W2S | 167 |
| DAMMZ11C1PN | 150 |
| DAMMZ11C1SN | 151 |
| DAMMZ11H1PN | 158 |
| DAMMZ11H1SN | 159 |
| DAMMZ11V1PN | 162 |
| DAMMZ11V1SN | 163 |
| DAMMZ3C3PN | 150 |
| DAMMZ3C3SN | 151 |
| DAMMZ3CK3PN | 150 |
| DAMMZ3CK3SN | 151 |
| DAMMZ3H3PN | 158 |
| DAMMZ3H3SN | 159 |
| DAMMZ3HK3PN | 158 |
| DAMMZ3HK3SN | 159 |
| DAMMZ3V3PN | 162 |
| DAMMZ3V3SN | 163 |
| DAMMZ3VK3PN | 162 |
| DAMMZ3VK3SN | 163 |
| DAMMZ7C2PN | 150 |
| DAMMZ7C2SN | 151 |
| DAMMZ7H2PN | 158 |
| DAMMZ7H2SN | 159 |
| DAMMZ7V2PN | 162 |
| DAMMZ7V2SN | 163 |
| DAMN11C1PNK87 | 52 |
| DAMN11C1PYK87 | 56 |
| DAMN11C1SNA197 | 53 |
| DAMN11C1SYA197 | 57 |
| DAMN11H1PNK87 | 66 |
| DAMN11H1PYK87 | 70 |
| DAMN11H1SNA197 | 67 |
| DAMN11H1SYA197 | 71 |
| DAMN15PNK87 | 6 |
| DAMN15SNA197 | 7 |
| DAMN3C3PNK87 | 52 |
| DAMN3C3PYK87 | 56 |
| DAMN3C3SNA197 | 53 |
| DAMN3C3SYA197 | 57 |
| DAMN3CK3PNK87TM | 52 |
| DAMN3CK3PYK87TM | 56 |
| DAMN3CK3SNA197TM | 53 |
| DAMN3CK3SYA197TM | 57 |
| DAMN3H3PNK87 | 66 |
| DAMN3H3PYK87 | 70 |
| DAMN3H3SNA197 | 67 |
| DAMN3H3SYA197 | 71 |
| DAMN3HK3PNK87TM | 66 |
| DAMN3HK3PYK87TM | 70 |
| DAMN3HK3SNA197TM | 67 |
| DAMN3HK3SYA197TM | 71 |
| DAMN7C2PNK87 | 52 |
| DAMN7C2PYK87 | 56 |
| DAMN7C2SNA197 | 53 |
| DAMN7C2SYA197 | 57 |
| DAMN7H2PNK87 | 66 |
| DAMN7H2PYK87 | 70 |
| DAMN7H2SNA197 | 67 |
| DAMN7H2SYA197 | 71 |
| DAMP11C1PJK87 | 44 |
| DAMP11C1PVK87 | 50 |
| DAMP11C1SJA197 | 45 |
| DAMP11C1SVA197 | 51 |
| DAMP11H1PJK87 | 60 |
| DAMP11H1SJA197 | 61 |
| DAMP11P1PVK87 | 64 |
| DAMP11P1SVA197 | 65 |
| DAMP15PJK87 | 16 |
| DAMP15SJA197 | 17 |
| DAMP3C3PJK87 | 44 |
| DAMP3C3PVK87 | 50 |
| DAMP3C3SJA197 | 45 |
| DAMP3C3SVA197 | 51 |
| DAMP3CK3PJK87TM | 44 |
| DAMP3CK3PVK87TM | 50 |
| DAMP3CK3SJA197TM | 45 |
| DAMP3CK3SVA197TM | 51 |
| DAMP3H3PJK87 | 60 |
| DAMP3H3SJA197 | 61 |
| DAMP3HK3PJK87TM | 60 |
| DAMP3HK3SJA197TM | 61 |
| DAMP3P3PVK87 | 64 |
| DAMP3P3SVA197 | 65 |
| DAMP3PK3PVK87TM | 64 |
| DAMP3PK3SVA197TM | 65 |
| DAMP7C2PJK87 | 44 |
| DAMP7C2PVK87 | 50 |
| DAMP7C2SJA197 | 45 |
| DAMP7C2SVA197 | 51 |
| DAMP7H2PJK87 | 60 |
| DAMP7H2SJA197 | 61 |
| DAMP7P2PVK87 | 64 |
| DAMP7P2SVA197 | 65 |
| DAMV11C1PNK87 | 52 |
| DAMV11C1PYK87 | 56 |
| DAMV11C1SNA197 | 53 |
| DAMV11C1SYA197 | 57 |

| Part Number | Page |
|---|---|
| DAMV11H1PNK87 | 66 |
| DAMV11H1PYK87 | 70 |
| DAMV11H1SNA197 | 67 |
| DAMV11H1SYA197 | 71 |
| DAMV15PNK87 | 6 |
| DAMV15SNA197 | 7 |
| DAMV3C3PNK87 | 52 |
| DAMV3C3PYK87 | 56 |
| DAMV3C3SNA197 | 53 |
| DAMV3C3SYA197 | 57 |
| DAMV3CK3PNK87TM | 52 |
| DAMV3CK3PYK87TM | 56 |
| DAMV3CK3SNA197TM | 53 |
| DAMV3CK3SYA197TM | 57 |
| DAMV3H3PNK87 | 66 |
| DAMV3H3PYK87 | 70 |
| DAMV3H3SNA197 | 67 |
| DAMV3H3SYA197 | 71 |
| DAMV3HK3PNK87TM | 66 |
| DAMV3HK3PYK87TM | 70 |
| DAMV3HK3SNA197TM | 67 |
| DAMV3HK3SYA197TM | 71 |
| DAMV7C2PNK87 | 52 |
| DAMV7C2PYK87 | 56 |
| DAMV7C2SNA197 | 53 |
| DAMV7C2SYA197 | 57 |
| DAMV7H2PNK87 | 66 |
| DAMV7H2PYK87 | 70 |
| DAMV7H2SNA197 | 67 |
| DAMV7H2SYA197 | 71 |
| DAMY11W1PK87 | 78 |
| DAMY11W1PNM | 188 |
| DAMY11W1SA197 | 79 |
| DAMY11W1SNM | 189 |
| DAMY15P | 140 |
| DAMY15PNM | 180 |
| DAMY15PNM*1AON | 176 |
| DAMY15POL3NM | 172 |
| DAMY15S | 141 |
| DAMY15SNM | 181 |
| DAMY15SNM*1AON | 177 |
| DAMY15SOL3NM | 173 |
| DAMY3W3PK87 | 78 |
| DAMY3W3PNM | 188 |
| DAMY3W3SA197 | 79 |
| DAMY3W3SNM | 189 |
| DAMY3WK3PK87 | 78 |
| DAMY3WK3PNM | 188 |
| DAMY3WK3SA197 | 79 |
| DAMY3WK3SNM | 189 |
| DAMY7W2PK87 | 78 |
| DAMY7W2PNM | 188 |
| DAMY7W2SA197 | 79 |
| DAMY7W2SNM | 189 |
| DAMZ11C1PNK87 | 52 |
| DAMZ11C1PYK87 | 56 |
| DAMZ11C1SNA197 | 53 |
| DAMZ11C1SYA197 | 57 |
| DAMZ11H1PNK87 | 66 |
| DAMZ11H1PYK87 | 70 |
| DAMZ11H1SNA197 | 67 |
| DAMZ11H1SYA197 | 71 |
| DAMZ15PNK87 | 6 |
| DAMZ15SNA197 | 7 |
| DAMZ3C3PNK87 | 52 |
| DAMZ3C3PYK87 | 56 |
| DAMZ3C3SNA197 | 53 |
| DAMZ3C3SYA197 | 57 |
| DAMZ3CK3PNK87TM | 52 |
| DAMZ3CK3PYK87TM | 56 |
| DAMZ3CK3SNA197TM | 53 |
| DAMZ3CK3SYA197TM | 57 |
| DAMZ3H3PNK87 | 66 |
| DAMZ3H3PYK87 | 70 |
| DAMZ3H3SNA197 | 67 |
| DAMZ3H3SYA197 | 71 |
| DAMZ3HK3PNK87TM | 66 |
| DAMZ3HK3PYK87TM | 70 |
| DAMZ3HK3SNA197TM | 67 |
| DAMZ3HK3SYA197TM | 71 |
| DAMZ7C2PNK87 | 52 |
| DAMZ7C2PYK87 | 56 |
| DAMZ7C2SNA197 | 53 |
| DAMZ7C2SYA197 | 57 |
| DAMZ7H2PNK87 | 66 |
| DAMZ7H2PYK87 | 70 |
| DAMZ7H2SNA197 | 67 |
| DAMZ7H2SYA197 | 71 |
| DANG15P-P1 | 4 |
| DANG15S-P1 | 5 |
| DANGE15P-P1 | 4 |
| DANGE15S-P1 | 5 |
| DANGL15P-P1 | 4 |
| DANGL15S-P1 | 5 |
| DANGX15P-P1 | 4 |
| DANGX15S-P1 | 5 |
| DANGZ15P-P1 | 4 |
| DANGZ15S-P1 | 5 |
| DAW15P* | 38 |
| DAW15P*G | 38 |
| DAW15S* | 39 |
| DAW15S*G | 39 |
| DAWE15P* | 38 |
| DAWE15P*G | 38 |
| DAWE15S* | 39 |
| DAWE15S*G | 39 |
| DAX15P-0L2-K87-146 | 10 |
| DAX15PK87 | 32 |
| DAX15S-0L2-A197-146 | 11 |
| DAX15SA197 | 33 |
| DB-59-20 | 195, 218 |
| DB-60-20 | 195, 218 |
| DB111807-1 | 216 |
| DB111807-5 | 216 |
| DB111811 | 216 |
| DB111811-2 | 216 |
| DB111949-43 | 48 |
| DB115339-2 | 207 |
| DB115339-22 | 205 |
| DB115386-102A | 195 |
| DB115386-3B | 207 |
| DB121073-151 | 200 |
| DB121073-51 | 200 |
| DB19678-168 | 193, 195 |
| DB19678-171 | 195 |
| DB19678-175 | 195 |
| DB19678-2 | 204 |
| DB19977-2 | 204 |
| DB19977-43 | 193, 195 |
| DB20962 | 203 |
| DB20962-18 | 192 |
| DB22254 | 214 |
| DB22255 | 215 |
| DB24659 | 203 |
| DB24659-15 | 192, 195 |
| DB25P-0L2-K87 | 10 |
| DB25P-1A5N-K87 | 26 |
| DB25P-1A6N-K87 | 26 |
| DB25P-1A7N-K87 | 22 |
| DB25P-1A8N-K87 | 22 |
| DB25P-1A9N-K87 | 22 |
| DB25P-1ADN-K87 | 24 |
| DB25P-1AFN-K87 | 22 |
| DB25P-1AJN-K87 | 24 |
| DB25P-1AON-K87 | 20 |
| DB25P-1ATN-K87 | 26 |
| DB25P-1AUN-K87 | 26 |
| DB25P-1AVN-K87 | 24 |
| DB25P-1AWN-K87 | 24 |
| DB25P-F179A-K87 | 12 |
| DB25PK87 | 32 |
| DB25S-0L2-A197 | 11 |
| DB25S-1A5N-A197 | 27 |
| DB25S-1A6N-A197 | 27 |
| DB25S-1A7N-A197 | 23 |
| DB25S-1A8N-A197 | 23 |
| DB25S-1A9N-A197 | 23 |
| DB25S-1ADN-A197 | 25 |
| DB25S-1AFN-A197 | 23 |
| DB25S-1AJN-A197 | 25 |
| DB25S-1AON-A197 | 21 |
| DB25S-1ATN-A197 | 27 |
| DB25S-1AUN-A197 | 27 |
| DB25S-1AVN-A197 | 25 |
| DB25S-1AWN-A197 | 25 |
| DB25S-F179A-A197 | 13 |
| DB25SA197 | 33 |
| DB50906-1 | 218 |
| DB51212 | 206 |
| DB51213 | 206 |
| DB51221-1 | 210 |
| DB51226-1B | 206 |
| DB53750-2 | 218 |
| DBA13W3PK87F0 | 80 |
| DBA13W3SA197F0 | 81 |
| DBA17W2PK87F0 | 80 |
| DBA17W2SA197F0 | 81 |
| DBA21W1PK87F0 | 80 |
| DBA21W1SA197F0 | 81 |
| DBA25PK87FO | 36 |
| DBA25SA197FO | 37 |
| DBA5W5PK87F0 | 80 |
| DBA5W5SA197F0 | 81 |
| DBA9W4PK87F0 | 80 |
| DBA9W4SA197F0 | 81 |
| DBBS-25 | 205 |
| DBBU111511 | 216 |
| DBE25P-0L2-K87-146 | 10 |
| DBE25PK87 | 32 |
| DBE25S-0L2-A197-146 | 11 |
| DBE25SA197 | 33 |
| DBJK25P*-1A0N | 110 |
| DBJK25P*-1A5N | 118 |
| DBJK25P*-1A6N | 118 |
| DBJK25P*-1A7N | 114 |
| DBJK25P*-1A8N | 114 |
| DBJK25P*-1A9N | 114 |
| DBJK25P*-1ADN | 116 |
| DBJK25P*-1AFN | 114 |
| DBJK25P*-1AGN | 116 |
| DBJK25P*-1AHN | 114 |
| DBJK25P*-1AJN | 116 |
| DBJK25P*-1APN | 118 |
| DBJK25P*-1ATN | 118 |
| DBJK25P*-1AUN | 118 |
| DBJK25P*-1AVN | 116 |
| DBJK25P*-1AWN | 116 |
| DBJK25P*-1U0N | 108 |
| DBJK25P*-1U7N | 112 |
| DBJK25P*-1U7N-146 | 112 |
| DBJK25P*-OL4 | 120 |
| DBJK25S*-1A0N | 111 |
| DBJK25S*-1A5N | 119 |
| DBJK25S*-1A6N | 119 |
| DBJK25S*-1A7N | 115 |
| DBJK25S*-1A8N | 115 |
| DBJK25S*-1A9N | 115 |
| DBJK25S*-1ADN | 117 |
| DBJK25S*-1AFN | 115 |
| DBJK25S*-1AGN | 117 |
| DBJK25S*-1AHN | 115 |
| DBJK25S*-1AJN | 117 |
| DBJK25S*-1APN | 119 |
| DBJK25S*-1ATN | 119 |
| DBJK25S*-1AUN | 119 |
| DBJK25S*-1AVN | 117 |
| DBJK25S*-1AWN | 117 |
| DBJK25S*-1U0N | 109 |
| DBJK25S*-1U7N | 113 |
| DBJK25S*-1U7N-146 | 113 |
| DBJK25S*-OL4 | 121 |
| DBJKE25P*-1A0N | 110 |
| DBJKE25P*-1U0N | 108 |
| DBJKE25P*-OL4 | 120 |
| DBJKE25P*-OL4-146 | 120 |
| DBJKE25S*-1A0N | 111 |
| DBJKE25S*-1U0N | 109 |
| DBJKE25S*-OL4 | 121 |
| DBJKE25S*-OL4-146 | 121 |
| DBJKX25P*-1A0N | 110 |
| DBJKX25P*-OL4 | 120 |
| DBJKX25P*-OL4-146 | 120 |
| DBJKX25S*-1A0N | 111 |
| DBJKX25S*-OL4 | 121 |
| DBJKX25S*-OL4-146 | 121 |
| DBJT25P | 122 |
| DBJT25S* | 123 |
| DBJTE25P | 122 |
| DBJTE25S* | 123 |
| DBJTX25P | 122 |
| DBJTX25S* | 123 |
| DBM-13W3P-1A0N-K87 | 74 |
| DBM-13W3P-1A7N-K87 | 74 |
| DBM-13W3P-NMB-76 | 195 |
| DBM-13W3P-NMC-76 | 195 |
| DBM-13W3P-OL2-K87 | 76 |
| DBM-13W3P-OL4-K87 | 76 |
| DBM-13W3S-1A0N-A197 | 75 |
| DBM-13W3S-1A7N-A197 | 75 |
| DBM-13W3S-NMB-77 | 195 |
| DBM-13W3S-NMC-76 | 195 |
| DBM-13W3S-OL2-A197 | 77 |
| DBM-13W3S-OL4-A197 | 77 |
| DBM-17W2P-1A0N-K87 | 74 |
| DBM-17W2P-1A7N-K87 | 74 |
| DBM-17W2P-NMB-76 | 195 |
| DBM-17W2P-NMC-76 | 195 |
| DBM-17W2P-OL2-K87 | 76 |
| DBM-17W2P-OL4-K87 | 76 |
| DBM-17W2S-1A0N-A197 | 75 |
| DBM-17W2S-1A7N-A197 | 75 |
| DBM-17W2S-NMC-76 | 195 |
| DBM-17W2S-NMC-77 | 195 |
| DBM-17W2S-OL2-A197 | 77 |
| DBM-17W2S-OL4-A197 | 77 |
| DBM-21W1P-1A0N-K87 | 74 |
| DBM-21W1P-1A7N-K87 | 74 |
| DBM-21W1P-NMB-76 | 195 |
| DBM-21W1P-NMB-77 | 195 |
| DBM-21W1P-OL2-K87 | 76 |
| DBM-21W1P-OL4-K87 | 76 |
| DBM-21W1S-1A0N-A197 | 75 |
| DBM-21W1S-1A7N-A197 | 75 |
| DBM-21W1S-NMB-76 | 195 |
| DBM-21W1S-NMB-77 | 195 |
| DBM-21W1S-NMC-76 | 195 |
| DBM-21W1S-OL2-A197 | 77 |
| DBM-21W1S-OL4-A197 | 77 |
| DBM-25S-NMB-76 | 195 |
| DBM-25S-NMC-76 | 195 |
| DBM-25S-NMC-77 | 195 |
| DBM-5W5P-1A0N-K87 | 74 |
| DBM-5W5P-1A7N-K87 | 74 |
| DBM-5W5P-NMB-76 | 195 |
| DBM-5W5P-NMC-76 | 195 |
| DBM-5W5P-NMC-77 | 195 |
| DBM-5W5P-OL2-K87 | 76 |
| DBM-5W5P-OL4-K87 | 76 |
| DBM-5W5S-1A0N-A197 | 75 |
| DBM-5W5S-1A7N-A197 | 75 |
| DBM-5W5S-NMB-76 | 195 |
| DBM-5W5S-NMB-77 | 195 |
| DBM-5W5S-NMC-76 | 195 |
| DBM-5W5S-NMC-77 | 195 |
| DBM-5W5S-OL2-A197 | 77 |
| DBM-5W5S-OL4-A197 | 77 |
| DBM-9W4P-1A0N-K87 | 74 |
| DBM-9W4P-1A7N-K87 | 74 |
| DBM-9W4P-NMB-77 | 195 |
| DBM-9W4P-NMC-76 | 195 |
| DBM-9W4P-OL2-K87 | 76 |
| DBM-9W4P-OL4-K87 | 76 |
| DBM-9W4S-1A0N-A197 | 75 |
| DBM-9W4S-1A7N-A197 | 75 |
| DBM-9W4S-NMB-77 | 195 |
| DBM-9W4S-NMC-76 | 195 |
| DBM-9W4S-OL2-A197 | 77 |
| DBM-9W4S-OL4-A197 | 77 |
| DBM13W3P-NMB-77 | 195 |
| DBM13W3P1A0NNMBK52 | 195 |
| DBM13W3P1A7NNMBK52 | 195 |
| DBM13W3P1A9NNMBK52 | 195 |
| DBM13W3PF179ANMBK52 | 195 |
| DBM13W3PK87 | 78 |
| DBM13W3PNM | 188 |
| DBM13W3PNMBK52 | 195 |
| DBM13W3POL3NMBK52 | 195 |
| DBM13W3S-NMB-76 | 195 |
| DBM13W3S1A0NNMBK52 | 195 |
| DBM13W3S1A7NNMBK52 | 195 |
| DBM13W3S1A9NNMBK52 | 195 |
| DBM13W3SA197 | 79 |






Dimensions are shown in mm (inch)
Dimensions subject to change

| Part Number | Page |
|---|---|
| DBM13W3SF179ANMBK52 | 195 |
| DBM13W3SNM | 189 |
| DBM13W3SNMBK52 | 195 |
| DBM13W3SOL3NMBK52 | 195 |
| DBM17W2P-NMC-77 | 195 |
| DBM17W2P1A0NNMBK52 | 195 |
| DBM17W2P1A7NNMBK52 | 195 |
| DBM17W2P1A9NNMBK52 | 195 |
| DBM17W2PF179ANMBK52 | 195 |
| DBM17W2PK87 | 78 |
| DBM17W2PNM | 188 |
| DBM17W2PNMB77 | 195 |
| DBM17W2PNMBK52 | 195 |
| DBM17W2POL3NMBK52 | 195 |
| DBM17W2S1A0NNMBK52 | 195 |
| DBM17W2S1A7NNMBK52 | 195 |
| DBM17W2S1A9NNMBK52 | 195 |
| DBM17W2SA197 | 79 |
| DBM17W2SF179ANMBK52 | 195 |
| DBM17W2SNM | 189 |
| DBM17W2SNMB77 | 195 |
| DBM17W2SNMBK52 | 195 |
| DBM17W2SOL3NMBK52 | 195 |
| DBM21W1P1A0NNMBK52 | 195 |
| DBM21W1P1A7NNMBK52 | 195 |
| DBM21W1P1A9NNMBK52 | 195 |
| DBM21W1PF179ANMBK52 | 195 |
| DBM21W1PK87 | 78 |
| DBM21W1PNM | 188 |
| DBM21W1PNMBK52 | 195 |
| DBM21W1POL3NMBK52 | 195 |
| DBM21W1S1A0NNMBK52 | 195 |
| DBM21W1S1A7NNMBK52 | 195 |
| DBM21W1S1A9NNMBK52 | 195 |
| DBM21W1SA197 | 79 |
| DBM21W1SF179ANMBK52 | 195 |
| DBM21W1SNM | 189 |
| DBM21W1SNMBK52 | 195 |
| DBM21W1SOL3NMBK52 | 195 |
| DBM25P | 140 |
| DBM25P1A0NNMBK52 | 195 |
| DBM25P1A7NNMBK52 | 195 |
| DBM25P1A9NNMBK52 | 195 |
| DBM25PA | 132 |
| DBM25PB | 136 |
| DBM25PC | 134 |
| DBM25PD | 132 |
| DBM25PE | 136 |
| DBM25PF | 134 |
| DBM25PF179 | 138 |
| DBM25PF179A | 138 |
| DBM25PF179ANMBK52 | 195 |
| DBM25PG | 132 |
| DBM25PH | 136 |
| DBM25PK | 134 |
| DBM25PL | 132 |
| DBM25PLNM | 174 |
| DBM25PM | 136 |
| DBM25PNM | 180 |
| DBM25PNM*1A7N | 178 |
| DBM25PNM*1A9N | 178 |
| DBM25PNM*1AON | 176 |
| DBM25PNMB76 | 195 |
| DBM25PNMB77 | 195 |
| DBM25PNMBK52 | 195 |
| DBM25PNMC76 | 195 |
| DBM25PNMC77 | 195 |
| DBM25POL3NM | 172 |
| DBM25POL3NMBK52 | 195 |
| DBM25PP | 134 |
| DBM25PR | 134 |
| DBM25PS | 132 |
| DBM25PW | 132 |
| DBM25PX | 136 |
| DBM25PZ | 136 |
| DBM25S | 141 |
| DBM25S1A0NNMBK52 | 195 |
| DBM25S1A7NNMBK52 | 195 |
| DBM25S1A9NNMBK52 | 195 |
| DBM25SA | 133 |
| DBM25SB | 137 |
| DBM25SC | 135 |
| DBM25SD | 133 |
| DBM25SE | 137 |
| DBM25SF | 135 |
| DBM25SF179 | 139 |
| DBM25SF179A | 139 |
| DBM25SF179ANMBK52 | 195 |
| DBM25SG | 133 |
| DBM25SH | 137 |
| DBM25SK | 135 |
| DBM25SL | 133 |
| DBM25SLNM | 175 |
| DBM25SM | 137 |
| DBM25SNM | 181 |
| DBM25SNM*1A7N | 179 |
| DBM25SNM*1A9N | 179 |
| DBM25SNM*1AON | 177 |
| DBM25SNMBK52 | 195 |
| DBM25SOL3NM | 173 |
| DBM25SOL3NMBK52 | 195 |
| DBM25SP | 135 |
| DBM25SR | 135 |
| DBM25SS | 133 |
| DBM25SW | 133 |
| DBM25SX | 137 |
| DBM25SZ | 137 |
| DBM5W5PNMB77 | 195 |
| DBM5W5PNMBK52 | 195 |
| DBM5W5SA197 | 79 |
| DBM5W5SNM | 189 |
| DBM5W5SNMBK52 | 195 |
| DBM9W4P1A0NNMBK52 | 195 |
| DBM9W4P1A7NNMBK52 | 195 |
| DBM9W4P1A9NNMBK52 | 195 |
| DBM9W4PF179ANMBK52 | 195 |
| DBM9W4PK87 | 78 |
| DBM9W4PNM | 188 |
| DBM9W4PNMBK52 | 195 |
| DBM9W4POL3NMBK52 | 195 |
| DBM9W4S1A0NNMBK52 | 195 |
| DBM9W4S1A7NNMBK52 | 195 |
| DBM9W4S1A9NNMBK52 | 195 |
| DBM9W4SA197 | 79 |
| DBM9W4SF179ANMBK52 | 195 |
| DBM9W4SNM | 189 |
| DBM9W4SNMBK52 | 195 |
| DBM9W4SOL3NMBK52 | 195 |
| DBMA25PNM | 182 |
| DBMA25PNMBK52 | 195 |
| DBMA25SNM | 183 |
| DBMA25SNMBK52 | 195 |
| DBMA44PNM | 184 |
| DBMA44SNM | 185 |
| DBMAY25PNM | 182 |
| DBMAY25SNM | 183 |
| DBMAY44PNM | 184 |
| DBMAY44SNM | 185 |
| DBMB-17W2S-NMB-76 | 195 |
| DBMB-25S-NMB-76 | 195 |
| DBMB-25S-NMB-77 | 195 |
| DBMB-25S-NMC-77 | 195 |
| DBMB25SNMC76 | 195 |
| DBMC13C3PJK87 | 44 |
| DBMC13C3PVK87 | 50 |
| DBMC13C3SJA197 | 45 |
| DBMC13C3SVA197 | 51 |
| DBMC13H3PJK87 | 60 |
| DBMC13H3SJA197 | 61 |
| DBMC13P3PVK87 | 64 |
| DBMC13P3SVA197 | 65 |
| DBMC17C2PJK87 | 44 |
| DBMC17C2PVK87 | 50 |
| DBMC17C2SJA197 | 45 |
| DBMC17C2SVA197 | 51 |
| DBMC17H2PJK87 | 60 |
| DBMC17H2SJA197 | 61 |
| DBMC17P2PVK87 | 64 |
| DBMC17P2SVA197 | 65 |
| DBMC21C1PJK87 | 44 |
| DBMC21C1PVK87 | 50 |
| DBMC21C1SJA197 | 45 |
| DBMC21C1SVA197 | 51 |
| DBMC21H1PJK87 | 60 |
| DBMC21H1SJA197 | 61 |
| DBMC21P1PVK87 | 64 |
| DBMC21P1SVA197 | 65 |
| DBMC25PJK87 | 16 |
| DBMC25SJA197 | 17 |
| DBMC5C5PJK87 | 44 |
| DBMC5C5PVK87 | 50 |
| DBMC5C5SJA197 | 45 |
| DBMC5C5SVA197 | 51 |
| DBMC5H5PJK87 | 60 |
| DBMC5H5SJA197 | 61 |
| DBMC5P5PVK87 | 64 |
| DBMC5P5SVA197 | 65 |
| DBMC9C4PJK87 | 44 |
| DBMC9C4PVK87 | 50 |
| DBMC9C4SJA197 | 45 |
| DBMC9C4SVA197 | 51 |
| DBMC9H4PJK87 | 60 |
| DBMC9H4SJA197 | 61 |
| DBMC9P4PVK87 | 64 |
| DBMC9P4SVA197 | 65 |
| DBMD13C3PJK87 | 44 |
| DBMD13C3PVK87 | 50 |
| DBMD13C3SJA197 | 45 |
| DBMD13C3SVA197 | 51 |
| DBMD13H3PJK87 | 60 |
| DBMD13H3SJA197 | 61 |
| DBMD13P3PVK87 | 64 |
| DBMD13P3SVA197 | 65 |
| DBMD17C2PJK87 | 44 |
| DBMD17C2PVK87 | 50 |
| DBMD17C2SJA197 | 45 |
| DBMD17C2SVA197 | 51 |
| DBMD17H2PJK87 | 60 |
| DBMD17H2SJA197 | 61 |
| DBMD17P2PVK87 | 64 |
| DBMD17P2SVA197 | 65 |
| DBMD21C1PJK87 | 44 |
| DBMD21C1PVK87 | 50 |
| DBMD21C1SJA197 | 45 |
| DBMD21C1SVA197 | 51 |
| DBMD21H1PJK87 | 60 |
| DBMD21H1SJA197 | 61 |
| DBMD21P1PVK87 | 64 |
| DBMD21P1SVA197 | 65 |
| DBMD25PJK87 | 16 |
| DBMD25SJA197 | 17 |
| DBMD5C5PJK87 | 44 |
| DBMD5C5PVK87 | 50 |
| DBMD5C5SJA197 | 45 |
| DBMD5C5SVA197 | 51 |
| DBMD5H5PJK87 | 60 |
| DBMD5H5SJA197 | 61 |
| DBMD5P5PVK87 | 64 |
| DBMD5P5SVA197 | 65 |
| DBMD9C4PJK87 | 44 |
| DBMD9C4PVK87 | 50 |
| DBMD9C4SJA197 | 45 |
| DBMD9C4SVA197 | 51 |
| DBMD9H4PJK87 | 60 |
| DBMD9H4SJA197 | 61 |
| DBMD9P4PVK87 | 64 |
| DBMD9P4SVA197 | 65 |
| DBME13W3PK87 | 78 |
| DBME13W3SA197 | 79 |
| DBME17W2PK87 | 78 |
| DBME17W2SA197 | 79 |
| DBME21W1PK87 | 78 |
| DBME21W1SA197 | 79 |
| DBME25P | 140 |
| DBME25S | 141 |
| DBME5W5PK87 | 78 |
| DBME5W5SA197 | 79 |
| DBME9W4PK87 | 78 |
| DBME9W4SA197 | 79 |
| DBMG13C3PJK87 | 44 |
| DBMG13C3PVK87 | 50 |
| DBMG13C3SJA197 | 45 |
| DBMG13C3SVA197 | 51 |
| DBMG13H3PJK87 | 60 |
| DBMG13H3SJA197 | 61 |
| DBMG13P3PVK87 | 64 |
| DBMG13P3SVA197 | 65 |
| DBMG17C2PJK87 | 44 |
| DBMG17C2PVK87 | 50 |
| DBMG17C2SJA197 | 45 |
| DBMG17C2SVA197 | 51 |
| DBMG17H2PJK87 | 60 |
| DBMG17H2SJA197 | 61 |
| DBMG17P2PVK87 | 64 |
| DBMG17P2SVA197 | 65 |
| DBMG21C1PJK87 | 44 |
| DBMG21C1PVK87 | 50 |
| DBMG21C1SJA197 | 45 |
| DBMG21C1SVA197 | 51 |
| DBMG21H1PJK87 | 60 |
| DBMG21H1SJA197 | 61 |
| DBMG21P1PVK87 | 64 |
| DBMG21P1SVA197 | 65 |
| DBMG25PJK87 | 16 |
| DBMG25SJA197 | 17 |
| DBMG5C5PJK87 | 44 |
| DBMG5C5PVK87 | 50 |
| DBMG5C5SJA197 | 45 |
| DBMG5C5SVA197 | 51 |
| DBMG5H5PJK87 | 60 |
| DBMG5H5SJA197 | 61 |
| DBMG5P5PVK87 | 64 |
| DBMG5P5SVA197 | 65 |
| DBMG9C4PJK87 | 44 |
| DBMG9C4PVK87 | 50 |
| DBMG9C4SJA197 | 45 |
| DBMG9C4SVA197 | 51 |
| DBMG9H4PJK87 | 60 |
| DBMG9H4SJA197 | 61 |
| DBMG9P4PVK87 | 64 |
| DBMG9P4SVA197 | 65 |
| DBMM13W3P | 166 |
| DBMM13W3S | 167 |
| DBMM17W2P | 166 |
| DBMM17W2S | 167 |
| DBMM21W1P | 166 |
| DBMM21W1S | 167 |
| DBMM25P | 140 |
| DBMM25PA | 132 |
| DBMM25PB | 136 |
| DBMM25PC | 134 |
| DBMM25PD | 132 |
| DBMM25PE | 136 |
| DBMM25PF | 134 |
| DBMM25PF179 | 138 |
| DBMM25PF179A | 138 |
| DBMM25PG | 132 |
| DBMM25PH | 136 |
| DBMM25PK | 134 |
| DBMM25PL | 132 |
| DBMM25PM | 136 |
| DBMM25PP | 134 |
| DBMM25PR | 134 |
| DBMM25PS | 132 |
| DBMM25PW | 132 |
| DBMM25PX | 136 |
| DBMM25PZ | 136 |
| DBMM25S | 141 |
| DBMM25SA | 133 |
| DBMM25SB | 137 |
| DBMM25SC | 135 |
| DBMM25SD | 133 |
| DBMM25SE | 137 |
| DBMM25SF | 135 |
| DBMM25SF179 | 139 |
| DBMM25SF179A | 139 |
| DBMM25SG | 133 |
| DBMM25SH | 137 |
| DBMM25SK | 135 |
| DBMM25SL | 133 |
| DBMM25SM | 137 |
| DBMM25SP | 135 |
| DBMM25SR | 135 |
| DBMM25SS | 133 |
| DBMM25SW | 133 |
| DBMM25SX | 137 |
| DBMM25SZ | 137 |
| DBMM5W5S | 167 |
| DBMM9W4P | 166 |
| DBMM9W4S | 167 |
| DBMMC13C3PJ | 146 |
| DBMMC13C3SJ | 147 |

| Part Number | Page |
|---|---|
| DBMMC13H3PJ | 154 |
| DBMMC13H3SJ | 155 |
| DBMMC17C2PJ | 146 |
| DBMMC17C2SJ | 147 |
| DBMMC17H2PJ | 154 |
| DBMMC17H2SJ | 155 |
| DBMMC21C1PJ | 146 |
| DBMMC21C1SJ | 147 |
| DBMMC21H1PJ | 154 |
| DBMMC21H1SJ | 155 |
| DBMMC5C5PJ | 146 |
| DBMMC5C5SJ | 147 |
| DBMMC5H5PJ | 154 |
| DBMMC5H5SJ | 155 |
| DBMMC9C4PJ | 146 |
| DBMMC9C4SJ | 147 |
| DBMMC9H4PJ | 154 |
| DBMMC9H4SJ | 155 |
| DBMMD13C3PJ | 146 |
| DBMMD13C3SJ | 147 |
| DBMMD13H3PJ | 154 |
| DBMMD13H3SJ | 155 |
| DBMMD17C2PJ | 146 |
| DBMMD17C2SJ | 147 |
| DBMMD17H2PJ | 154 |
| DBMMD17H2SJ | 155 |
| DBMMD21C1PJ | 146 |
| DBMMD21C1SJ | 147 |
| DBMMD21H1PJ | 154 |
| DBMMD21H1SJ | 155 |
| DBMMD5C5PJ | 146 |
| DBMMD5C5SJ | 147 |
| DBMMD5H5PJ | 154 |
| DBMMD5H5SJ | 155 |
| DBMMD9C4PJ | 146 |
| DBMMD9C4SJ | 147 |
| DBMMD9H4PJ | 154 |
| DBMMD9H4SJ | 155 |
| DBMME13W3P | 166 |
| DBMME13W3S | 167 |
| DBMME17W2P | 166 |
| DBMME17W2S | 167 |
| DBMME21W1P | 166 |
| DBMME21W1S | 167 |
| DBMME25P | 140 |
| DBMME25S | 141 |
| DBMME5W5P | 166 |
| DBMME5W5S | 167 |
| DBMME9W4P | 166 |
| DBMME9W4S | 167 |
| DBMMG13C3PJ | 146 |
| DBMMG13C3SJ | 147 |
| DBMMG13H3PJ | 154 |
| DBMMG13H3SJ | 155 |
| DBMMG17C2PJ | 146 |
| DBMMG17C2SJ | 147 |
| DBMMG17H2PJ | 154 |
| DBMMG17H2SJ | 155 |
| DBMMG21C1PJ | 146 |
| DBMMG21C1SJ | 147 |
| DBMMG21H1PJ | 154 |
| DBMMG21H1SJ | 155 |
| DBMMG5C5PJ | 146 |
| DBMMG5C5SJ | 147 |
| DBMMG5H5PJ | 154 |
| DBMMG5H5SJ | 155 |
| DBMMG9C4PJ | 146 |
| DBMMG9C4SJ | 147 |
| DBMMG9H4PJ | 154 |
| DBMMG9H4SJ | 155 |
| DBMMN13C3PN | 150 |
| DBMMN13C3SN | 151 |
| DBMMN13H3PN | 158 |
| DBMMN13H3SN | 159 |
| DBMMN13V3PN | 162 |
| DBMMN13V3SN | 163 |
| DBMMN17C2PN | 150 |
| DBMMN17C2SN | 151 |
| DBMMN17H2PN | 158 |
| DBMMN17H2SN | 159 |
| DBMMN17V2PN | 162 |
| DBMMN17V2SN | 163 |
| DBMMN21C1PN | 150 |
| DBMMN21C1SN | 151 |
| DBMMN21H1PN | 158 |
| DBMMN21H1SN | 159 |
| DBMMN21V1PN | 162 |
| DBMMN21V1SN | 163 |
| DBMMN5C5PN | 150 |
| DBMMN5C5SN | 151 |
| DBMMN5H5PN | 158 |
| DBMMN5H5SN | 159 |
| DBMMN5V5PN | 162 |
| DBMMN5V5SN | 163 |
| DBMMN9C4PN | 150 |
| DBMMN9C4SN | 151 |
| DBMMN9H4PN | 158 |
| DBMMN9H4SN | 159 |
| DBMMN9V4PN | 162 |
| DBMMN9V4SN | 163 |
| DBMMP13C3PJ | 146 |
| DBMMP13C3SJ | 147 |
| DBMMP13H3PJ | 154 |
| DBMMP13H3SJ | 155 |
| DBMMP17C2PJ | 146 |
| DBMMP17C2SJ | 147 |
| DBMMP17H2PJ | 154 |
| DBMMP17H2SJ | 155 |
| DBMMP21C1PJ | 146 |
| DBMMP21C1SJ | 147 |
| DBMMP21H1PJ | 154 |
| DBMMP21H1SJ | 155 |
| DBMMP5C5PJ | 146 |
| DBMMP5C5SJ | 147 |
| DBMMP5H5PJ | 154 |
| DBMMP5H5SJ | 155 |
| DBMMP5W5P | 166 |
| DBMMP9C4PJ | 146 |
| DBMMP9C4SJ | 147 |
| DBMMP9H4PJ | 154 |
| DBMMP9H4SJ | 155 |
| DBMMV13C3PN | 150 |
| DBMMV13C3SN | 151 |
| DBMMV13H3PN | 158 |
| DBMMV13H3SN | 159 |
| DBMMV13V3PN | 162 |
| DBMMV13V3SN | 163 |
| DBMMV17C2PN | 150 |
| DBMMV17C2SN | 151 |
| DBMMV17H2PN | 158 |
| DBMMV17H2SN | 159 |
| DBMMV17V2PN | 162 |
| DBMMV17V2SN | 163 |
| DBMMV21C1PN | 150 |
| DBMMV21C1SN | 151 |
| DBMMV21H1PN | 158 |
| DBMMV21H1SN | 159 |
| DBMMV21V1PN | 162 |
| DBMMV21V1SN | 163 |
| DBMMV5C5PN | 150 |
| DBMMV5C5SN | 151 |
| DBMMV5H5PN | 158 |
| DBMMV5H5SN | 159 |
| DBMMV5V5PN | 162 |
| DBMMV5V5SN | 163 |
| DBMMV9C4PN | 150 |
| DBMMV9C4SN | 151 |
| DBMMV9H4PN | 158 |
| DBMMV9H4SN | 159 |
| DBMMV9V4PN | 162 |
| DBMMV9V4SN | 163 |
| DBMMY13W3P | 166 |
| DBMMY13W3S | 167 |
| DBMMY17W2P | 166 |
| DBMMY17W2S | 167 |
| DBMMY21W1P | 166 |
| DBMMY21W1S | 167 |
| DBMMY25P | 140 |
| DBMMY25S | 141 |
| DBMMY5W5P | 166 |
| DBMMY5W5S | 167 |
| DBMMY9W4P | 166 |
| DBMMY9W4S | 167 |
| DBMMZ13C3PN | 150 |
| DBMMZ13C3SN | 151 |
| DBMMZ13H3PN | 158 |
| DBMMZ13H3SN | 159 |
| DBMMZ13V3PN | 162 |
| DBMMZ13V3SN | 163 |
| DBMMZ17C2PN | 150 |
| DBMMZ17C2SN | 151 |
| DBMMZ17H2PN | 158 |
| DBMMZ17H2SN | 159 |
| DBMMZ17V2PN | 162 |
| DBMMZ17V2SN | 163 |
| DBMMZ21C1PN | 150 |
| DBMMZ21C1SN | 151 |
| DBMMZ21H1PN | 158 |
| DBMMZ21H1SN | 159 |
| DBMMZ21V1PN | 162 |
| DBMMZ21V1SN | 163 |
| DBMMZ5C5PN | 150 |
| DBMMZ5C5SN | 151 |
| DBMMZ5H5PN | 158 |
| DBMMZ5H5SN | 159 |
| DBMMZ5V5PN | 162 |
| DBMMZ5V5SN | 163 |
| DBMMZ9C4PN | 150 |
| DBMMZ9C4SN | 151 |
| DBMMZ9H4PN | 158 |
| DBMMZ9H4SN | 159 |
| DBMMZ9V4PN | 162 |
| DBMMZ9V4SN | 163 |
| DBMN13C3PNK87 | 52 |
| DBMN13C3PYK87 | 56 |
| DBMN13C3SNA197 | 53 |
| DBMN13C3SYA197 | 57 |
| DBMN13H3PNK87 | 66 |
| DBMN13H3PYK87 | 70 |
| DBMN13H3SNA197 | 67 |
| DBMN13H3SYA197 | 71 |
| DBMN17C2PNK87 | 52 |
| DBMN17C2PYK87 | 56 |
| DBMN17C2SNA197 | 53 |
| DBMN17C2SYA197 | 57 |
| DBMN17H2PNK87 | 66 |
| DBMN17H2PYK87 | 70 |
| DBMN17H2SNA197 | 67 |
| DBMN17H2SYA197 | 71 |
| DBMN21C1PNK87 | 52 |
| DBMN21C1PYK87 | 56 |
| DBMN21C1SNA197 | 53 |
| DBMN21C1SYA197 | 57 |
| DBMN21H1PNK87 | 66 |
| DBMN21H1PYK87 | 70 |
| DBMN21H1SNA197 | 67 |
| DBMN21H1SYA197 | 71 |
| DBMN25PNK87 | 6 |
| DBMN25SNA197 | 7 |
| DBMN5C5PNK87 | 52 |
| DBMN5C5PYK87 | 56 |
| DBMN5C5SNA197 | 53 |
| DBMN5C5SYA197 | 57 |
| DBMN5H5PNK87 | 66 |
| DBMN5H5PYK87 | 70 |
| DBMN5H5SNA197 | 67 |
| DBMN5H5SYA197 | 71 |
| DBMN9C4PNK87 | 52 |
| DBMN9C4PYK87 | 56 |
| DBMN9C4SNA197 | 53 |
| DBMN9C4SYA197 | 57 |
| DBMN9H4PNK87 | 66 |
| DBMN9H4PYK87 | 70 |
| DBMN9H4SNA197 | 67 |
| DBMN9H4SYA197 | 71 |
| DBMP13C3PJK87 | 44 |
| DBMP13C3PVK87 | 50 |
| DBMP13C3SJA197 | 45 |
| DBMP13C3SVA197 | 51 |
| DBMP13H3PJK87 | 60 |
| DBMP13H3SJA197 | 61 |
| DBMP13P3PVK87 | 64 |
| DBMP13P3SVA197 | 65 |
| DBMP17C2PJK87 | 44 |
| DBMP17C2PVK87 | 50 |
| DBMP17C2SJA197 | 45 |
| DBMP17C2SVA197 | 51 |
| DBMP17H2PJK87 | 60 |
| DBMP17H2SJA197 | 61 |
| DBMP17P2PVK87 | 64 |
| DBMP17P2SVA197 | 65 |
| DBMP21C1PJK87 | 44 |
| DBMP21C1PVK87 | 50 |
| DBMP21C1SJA197 | 45 |
| DBMP21C1SVA197 | 51 |
| DBMP21H1PJK87 | 60 |
| DBMP21H1SJA197 | 61 |
| DBMP21P1PVK87 | 64 |
| DBMP21P1SVA197 | 65 |
| DBMP25PJK87 | 16 |
| DBMP25SJA197 | 17 |
| DBMP5C5PJK87 | 44 |
| DBMP5C5PVK87 | 50 |
| DBMP5C5SJA197 | 45 |
| DBMP5C5SVA197 | 51 |
| DBMP5H5PJK87 | 60 |
| DBMP5H5SJA197 | 61 |
| DBMP5P5PVK87 | 64 |
| DBMP5P5SVA197 | 65 |
| DBMP5W5PK87 | 78 |
| DBMP5W5PNM | 188 |
| DBMP9C4PJK87 | 44 |
| DBMP9C4PVK87 | 50 |
| DBMP9C4SJA197 | 45 |
| DBMP9C4SVA197 | 51 |
| DBMP9H4PJK87 | 60 |
| DBMP9H4SJA197 | 61 |
| DBMP9P4PVK87 | 64 |
| DBMP9P4SVA197 | 65 |
| DBMV13C3PNK87 | 52 |
| DBMV13C3PYK87 | 56 |
| DBMV13C3SNA197 | 53 |
| DBMV13C3SYA197 | 57 |
| DBMV13H3PNK87 | 66 |
| DBMV13H3PYK87 | 70 |
| DBMV13H3SNA197 | 67 |
| DBMV13H3SYA197 | 71 |
| DBMV17C2PNK87 | 52 |
| DBMV17C2PYK87 | 56 |
| DBMV17C2SNA197 | 53 |
| DBMV17C2SYA197 | 57 |
| DBMV17H2PNK87 | 66 |
| DBMV17H2PYK87 | 70 |
| DBMV17H2SNA197 | 67 |
| DBMV17H2SYA197 | 71 |
| DBMV21C1PNK87 | 52 |
| DBMV21C1PYK87 | 56 |
| DBMV21C1SNA197 | 53 |
| DBMV21C1SYA197 | 57 |
| DBMV21H1PNK87 | 66 |
| DBMV21H1PYK87 | 70 |
| DBMV21H1SNA197 | 67 |
| DBMV21H1SYA197 | 71 |
| DBMV25PNK87 | 6 |
| DBMV25SNA197 | 7 |
| DBMV5C5PNK87 | 52 |
| DBMV5C5PYK87 | 56 |
| DBMV5C5SNA197 | 53 |
| DBMV5C5SYA197 | 57 |
| DBMV5H5PNK87 | 66 |
| DBMV5H5PYK87 | 70 |
| DBMV5H5SNA197 | 67 |
| DBMV5H5SYA197 | 71 |
| DBMV9C4PNK87 | 52 |
| DBMV9C4PYK87 | 56 |
| DBMV9C4SNA197 | 53 |
| DBMV9C4SYA197 | 57 |
| DBMV9H4PNK87 | 66 |
| DBMV9H4PYK87 | 70 |
| DBMV9H4SNA197 | 67 |
| DBMV9H4SYA197 | 71 |
| DBMY13W3PK87 | 78 |
| DBMY13W3PNM | 188 |
| DBMY13W3SA197 | 79 |
| DBMY13W3SNM | 189 |
| DBMY17W2PK87 | 78 |
| DBMY17W2PNM | 188 |
| DBMY17W2SA197 | 79 |
| DBMY17W2SNM | 189 |
| DBMY21W1PK87 | 78 |
| DBMY21W1PNM | 188 |
| DBMY21W1SA197 | 79 |






Dimensions are shown in mm (inch)
Dimensions subject to change

| Part Number | Page |
|---|---|
| DBMY21W1SNM | 189 |
| DBMY25P | 140 |
| DBMY25PNM | 180 |
| DBMY25PNM*1A0N | 176 |
| DBMY25POL3NM | 172 |
| DBMY25S | 141 |
| DBMY25SNM | 181 |
| DBMY25SNM*1A0N | 177 |
| DBMY25SOL3NM | 173 |
| DBMY5W5PK87 | 78 |
| DBMY5W5PNM | 188 |
| DBMY5W5SA197 | 79 |
| DBMY5W5SNM | 189 |
| DBMY9W4PK87 | 78 |
| DBMY9W4PNM | 188 |
| DBMY9W4SA197 | 79 |
| DBMY9W4SNM | 189 |
| DBMZ13C3PNK87 | 52 |
| DBMZ13C3PYK87 | 56 |
| DBMZ13C3SNA197 | 53 |
| DBMZ13C3SYA197 | 57 |
| DBMZ13H3PNK87 | 66 |
| DBMZ13H3PYK87 | 70 |
| DBMZ13H3SNA197 | 67 |
| DBMZ13H3SYA197 | 71 |
| DBMZ17C2PNK87 | 52 |
| DBMZ17C2PYK87 | 56 |
| DBMZ17C2SNA197 | 53 |
| DBMZ17C2SYA197 | 57 |
| DBMZ17H2PNK87 | 66 |
| DBMZ17H2PYK87 | 70 |
| DBMZ17H2SNA197 | 67 |
| DBMZ17H2SYA197 | 71 |
| DBMZ21C1PNK87 | 52 |
| DBMZ21C1PYK87 | 56 |
| DBMZ21C1SNA197 | 53 |
| DBMZ21C1SYA197 | 57 |
| DBMZ21H1PNK87 | 66 |
| DBMZ21H1PYK87 | 70 |
| DBMZ21H1SNA197 | 67 |
| DBMZ21H1SYA197 | 71 |
| DBMZ25PNK87 | 6 |
| DBMZ25SNA197 | 7 |
| DBMZ5C5PNK87 | 52 |
| DBMZ5C5PYK87 | 56 |
| DBMZ5C5SNA197 | 53 |
| DBMZ5C5SYA197 | 57 |
| DBMZ5H5PNK87 | 66 |
| DBMZ5H5PYK87 | 70 |
| DBMZ5H5SNA197 | 67 |
| DBMZ5H5SYA197 | 71 |
| DBMZ9C4PNK87 | 52 |
| DBMZ9C4PYK87 | 56 |
| DBMZ9C4SNA197 | 53 |
| DBMZ9C4SYA197 | 57 |
| DBMZ9H4PNK87 | 66 |
| DBMZ9H4PYK87 | 70 |
| DBMZ9H4SNA197 | 67 |
| DBMZ9H4SYA197 | 71 |
| DBNG25P-P1 | 4 |
| DBNG25S-P1 | 5 |
| DBNGE25P-P1 | 4 |
| DBNGE25S-P1 | 5 |
| DBNGL25P-P1 | 4 |
| DBNGL25S-P1 | 5 |
| DBNGX25P-P1 | 4 |
| DBNGX25S-P1 | 5 |
| DBNGZ25P-P1 | 4 |
| DBNGZ25S-P1 | 5 |
| DBW25P* | 38 |
| DBW25P*G | 38 |
| DBW25S* | 39 |
| DBW25S*G | 39 |
| DBWE25P* | 38 |
| DBWE25P*G | 38 |
| DBWE25S* | 39 |
| DBWE25S*G | 39 |
| DBX25P-0L2-K87-146 | 10 |
| DBX25PK87 | 32 |
| DBX25S-0L2-A197-146 | 11 |
| DBX25SA197 | 33 |
| DC-59-20 | 195, 218 |
| DC-60-20 | 195, 218 |
| DC111808-1 | 216 |
| DC111808-5 | 216 |
| DC115339-23 | 205 |
| DC115339-3 | 207 |
| DC115386-100A | 195 |
| DC115386-4B | 207 |
| DC121073-152 | 200 |
| DC121073-52 | 200 |
| DC19678-138 | 193, 195 |
| DC19678-162 | 195 |
| DC19678-173 | 195 |
| DC19678-3 | 204 |
| DC19977-3 | 204 |
| DC19977-45 | 193, 195 |
| DC20963 | 203 |
| DC20963-17 | 192 |
| DC22070 | 215 |
| DC22071 | 214 |
| DC24660 | 203 |
| DC24660-16 | 192, 195 |
| DC37P-0L2-K87 | 10 |
| DC37P-1A5N-K87 | 26 |
| DC37P-1A6N-K87 | 26 |
| DC37P-1A7N-K87 | 22 |
| DC37P-1A8N-K87 | 22 |
| DC37P-1A9N-K87 | 22 |
| DC37P-1ADN-K87 | 24 |
| DC37P-1AFN-K87 | 22 |
| DC37P-1AJN-K87 | 24 |
| DC37P-1A0N-K87 | 20 |
| DC37P-1ATN-K87 | 26 |
| DC37P-1AUN-K87 | 26 |
| DC37P-1AVN-K87 | 24 |
| DC37P-1AWN-K87 | 24 |
| DC37P-F179A-K87 | 12 |
| DC37PK87 | 32 |
| DC37S-0L2-A197 | 11 |
| DC37S-1A5N-A197 | 27 |
| DC37S-1A6N-A197 | 27 |
| DC37S-1A7N-A197 | 23 |
| DC37S-1A8N-A197 | 23 |
| DC37S-1A9N-A197 | 23 |
| DC37S-1ADN-A197 | 25 |
| DC37S-1AFN-A197 | 23 |
| DC37S-1AJN-A197 | 25 |
| DC37S-1A0N-A197 | 21 |
| DC37S-1ATN-A197 | 27 |
| DC37S-1AUN-A197 | 27 |
| DC37S-1AVN-A197 | 25 |
| DC37S-1AWN-A197 | 25 |
| DC37S-F179A-A197 | 13 |
| DC37SA197 | 33 |
| DC50907-1 | 218 |
| DC51214 | 206 |
| DC51215 | 206 |
| DC51222-1 | 210 |
| DC53750-3 | 218 |
| DCA21WA4PK87F0 | 80 |
| DCA21WA4SA197F0 | 81 |
| DCA25W3PK87F0 | 80 |
| DCA37PK87FO | 36 |
| DCA37SA197FO | 37 |
| DCA8W8PK87F0 | 80 |
| DCA8W8SA197F0 | 81 |
| DCE37P-0L2-K87-146 | 10 |
| DCE37PK87 | 32 |
| DCE37S-0L2-A197-146 | 11 |
| DCE37SA197 | 33 |
| DCJK37P*-1A0N | 110 |
| DCJK37P*-1A5N | 118 |
| DCJK37P*-1A6N | 118 |
| DCJK37P*-1A7N | 114 |
| DCJK37P*-1A8N | 114 |
| DCJK37P*-1A9N | 114 |
| DCJK37P*-1ADN | 116 |
| DCJK37P*-1AFN | 114 |
| DCJK37P*-1AGN | 116 |
| DCJK37P*-1AHN | 114 |
| DCJK37P*-1AJN | 116 |
| DCJK37P*-1APN | 118 |
| DCJK37P*-1ATN | 118 |
| DCJK37P*-1AUN | 118 |
| DCJK37P*-1AVN | 116 |
| DCJK37P*-1AWN | 116 |
| DCJK37P*-1U0N | 108 |
| DCJK37P*-1U7N | 112 |
| DCJK37P*-1U7N-146 | 112 |
| DCJK37P*-OL4 | 120 |
| DCJK37S*-1A0N | 111 |
| DCJK37S*-1A5N | 119 |
| DCJK37S*-1A6N | 119 |
| DCJK37S*-1A7N | 115 |
| DCJK37S*-1A8N | 115 |
| DCJK37S*-1A9N | 115 |
| DCJK37S*-1ADN | 117 |
| DCJK37S*-1AFN | 115 |
| DCJK37S*-1AGN | 117 |
| DCJK37S*-1AHN | 115 |
| DCJK37S*-1AJN | 117 |
| DCJK37S*-1APN | 119 |
| DCJK37S*-1ATN | 119 |
| DCJK37S*-1AUN | 119 |
| DCJK37S*-1AVN | 117 |
| DCJK37S*-1AWN | 117 |
| DCJK37S*-1U0N | 109 |
| DCJK37S*-1U7N | 113 |
| DCJK37S*-1U7N-146 | 113 |
| DCJK37S*-OL4 | 121 |
| DCJKE37P*-1A0N | 110 |
| DCJKE37P*-1U0N | 108 |
| DCJKE37P*-OL4 | 120 |
| DCJKE37P*-OL4-146 | 120 |
| DCJKE37S*-1A0N | 111 |
| DCJKE37S*-1U0N | 109 |
| DCJKE37S*-OL4 | 121 |
| DCJKE37S*-OL4-146 | 121 |
| DCJKX37P*-1A0N | 110 |
| DCJKX37P*-OL4 | 120 |
| DCJKX37P*-OL4-146 | 120 |
| DCJKX37S*-1A0N | 111 |
| DCJKX37S*-OL4 | 121 |
| DCJKX37S*-OL4-146 | 121 |
| DCJT37P | 122 |
| DCJT37S* | 123 |
| DCJTE37P | 122 |
| DCJTE37S* | 123 |
| DCJTX37P | 122 |
| DCJTX37S* | 123 |
| DCM-13W6P-1A0N-K87 | 74 |
| DCM-13W6P-1A7N-K87 | 74 |
| DCM-13W6P-NMB-76 | 195 |
| DCM-13W6P-NMB-77 | 195 |
| DCM-13W6P-NMC-76 | 195 |
| DCM-13W6P-NMC-77 | 195 |
| DCM-13W6P-OL2-K87 | 76 |
| DCM-13W6P-OL4-K87 | 76 |
| DCM-13W6S-1A0N-A197 | 75 |
| DCM-13W6S-1A7N-A197 | 75 |
| DCM-13W6S-NMB-77 | 195 |
| DCM-13W6S-NMC-77 | 195 |
| DCM-13W6S-OL2-A197 | 77 |
| DCM-13W6S-OL4-A197 | 77 |
| DCM-17W5P-1A0N-K87 | 74 |
| DCM-17W5P-1A7N-K87 | 74 |
| DCM-17W5P-NMB-76 | 195 |
| DCM-17W5P-NMC-76 | 195 |
| DCM-17W5P-NMC-77 | 195 |
| DCM-17W5P-OL2-K87 | 76 |
| DCM-17W5P-OL4-K87 | 76 |
| DCM-17W5S-1A0N-A197 | 75 |
| DCM-17W5S-1A7N-A197 | 75 |
| DCM-17W5S-NMB-77 | 195 |
| DCM-17W5S-NMC-76 | 195 |
| DCM-17W5S-NMC-77 | 195 |
| DCM-17W5S-OL2-A197 | 77 |
| DCM-17W5S-OL4-A197 | 77 |
| DCM-21W4P-NMB-77 | 195 |
| DCM-21W4S-NMB-77 | 195 |
| DCM-21WA4P-1A0N-K87 | 74 |
| DCM-21WA4P-1A7N-K87 | 74 |
| DCM-21WA4P-NMB-77 | 195 |
| DCM-21WA4P-NMC-76 | 195 |
| DCM-21WA4P-OL2-K87 | 76 |
| DCM-21WA4P-OL4-K87 | 76 |
| DCM-21WA4S-1A0N-A197 | 75 |
| DCM-21WA4S-1A7N-A197 | 75 |
| DCM-21WA4S-NMB-77 | 195 |
| DCM-21WA4S-OL2-A197 | 77 |
| DCM-21WA4S-OL4-A197 | 77 |
| DCM-25W36-NMB-77 | 195 |
| DCM-25W3P-1A0N-K87 | 74 |
| DCM-25W3P-1A7N-K87 | 74 |
| DCM-25W3P-NMB-77 | 195 |
| DCM-25W3P-OL2-K87 | 76 |
| DCM-25W3P-OL4-K87 | 76 |
| DCM-25W3S-1A0N-A197 | 75 |
| DCM-25W3S-1A7N-A197 | 75 |
| DCM-25W3S-NMC-76 | 195 |
| DCM-25W3S-NMC-77 | 195 |
| DCM-25W3S-OL2-A197 | 77 |
| DCM-25W3S-OL4-A197 | 77 |
| DCM-27W2P-1A0N-K87 | 74 |
| DCM-27W2P-1A7N-K87 | 74 |
| DCM-27W2P-OL2-K87 | 76 |
| DCM-27W2P-OL4-K87 | 76 |
| DCM-27W2S-1A0N-A197 | 75 |
| DCM-27W2S-1A7N-A197 | 75 |
| DCM-27W2S-NMC-76 | 195 |
| DCM-27W2S-OL2-A197 | 77 |
| DCM-27W2S-OL4-A197 | 77 |
| DCM-37P-NMC-77 | 195 |
| DCM-37S-NMB-76 | 195 |
| DCM-37S-NMC-76 | 195 |
| DCM-37S-NMC-77 | 195 |
| DCM-8W8P-1A0N-K87 | 74 |
| DCM-8W8P-1A7N-K87 | 74 |
| DCM-8W8P-NMB-77 | 195 |
| DCM-8W8P-NMC-77 | 195 |
| DCM-8W8P-OL2-K87 | 76 |
| DCM-8W8P-OL4-K87 | 76 |
| DCM-8W8S-1A0N-A197 | 75 |
| DCM-8W8S-1A7N-A197 | 75 |
| DCM-8W8S-MNC-76 | 195 |
| DCM-8W8S-NMB-77 | 195 |
| DCM-8W8S-NMC-77 | 195 |
| DCM-8W8S-OL2-A197 | 77 |
| DCM-8W8S-OL4-A197 | 77 |
| DCM13W6P1A0NNMBK52 | 195 |
| DCM13W6P1A7NNMBK52 | 195 |
| DCM13W6P1A9NNMBK52 | 195 |
| DCM13W6PF179ANMBK52 | 195 |
| DCM13W6PK87 | 78 |
| DCM13W6PNM | 188 |
| DCM13W6PNMBK52 | 195 |
| DCM13W6POL3NMBK52 | 195 |
| DCM13W6S1A0NNMBK52 | 195 |
| DCM13W6S1A7NNMBK52 | 195 |
| DCM13W6S1A9NNMBK52 | 195 |
| DCM13W6SA197 | 79 |
| DCM13W6SF179ANMBK52 | 195 |
| DCM13W6SNM | 189 |
| DCM13W6SNMBK52 | 195 |
| DCM13W6SNMC76 | 195 |
| DCM13W6SOL3NMBK52 | 195 |
| DCM17W5P1A0NNMBK52 | 195 |
| DCM17W5P1A7NNMBK52 | 195 |
| DCM17W5P1A9NNMBK52 | 195 |
| DCM17W5PF179ANMBK52 | 195 |
| DCM17W5PK87 | 78 |
| DCM17W5PNM | 188 |
| DCM17W5PNMB77 | 195 |
| DCM17W5PNMBK52 | 195 |
| DCM17W5POL3NMBK52 | 195 |
| DCM17W5S-NMB-76 | 195 |
| DCM17W5S1A0NNMBK52 | 195 |
| DCM17W5S1A7NNMBK52 | 195 |
| DCM17W5S1A9NNMBK52 | 195 |
| DCM17W5SA197 | 79 |
| DCM17W5SF179ANMBK52 | 195 |
| DCM17W5SNM | 189 |
| DCM17W5SNMBK52 | 195 |
| DCM17W5SOL3NMBK52 | 195 |
| DCM21W4S-NMC-76 | 195 |
| DCM21WA4P-NMB-76 | 195 |
| DCM21WA4P1A0NNMBK52 | 195 |
| DCM21WA4P1A7NNMBK52 | 195 |
| DCM21WA4P1A9NNMBK52 | 195 |
| DCM21WA4PF179ANMBK52 | 195 |
| DCM21WA4PK87 | 78 |

| Part Number | Page |
|---|---|
| DCM21WA4PNM | 188 |
| DCM21WA4PNMBK52 | 195 |
| DCM21WA4POL3NMBK52 | 195 |
| DCM21WA4S-NMB-76 | 195 |
| DCM21WA4S1A0NNMBK52 | 195 |
| DCM21WA4S1A7NNMBK52 | 195 |
| DCM21WA4S1A9NNMBK52 | 195 |
| DCM21WA4SA197 | 79 |
| DCM21WA4SF179ANMBK52 | 195 |
| DCM21WA4SNM | 189 |
| DCM21WA4SNMBK52 | 195 |
| DCM21WA4SOL3NMBK52 | 195 |
| DCM25W3P-NMB-76 | 195 |
| DCM25W3P1A0NNMBK52 | 195 |
| DCM25W3P1A7NNMBK52 | 195 |
| DCM25W3P1A9NNMBK52 | 195 |
| DCM25W3PF179ANMBK52 | 195 |
| DCM25W3PK87 | 78 |
| DCM25W3PNM | 188 |
| DCM25W3PNMBK52 | 195 |
| DCM25W3POL3NMBK52 | 195 |
| DCM25W3S1A0NNMBK52 | 195 |
| DCM25W3S1A7NNMBK52 | 195 |
| DCM25W3S1A9NNMBK52 | 195 |
| DCM25W3SA197 | 79 |
| DCM25W3SF179ANMBK52 | 195 |
| DCM25W3SNM | 189 |
| DCM25W3SNMBK52 | 195 |
| DCM25W3SOL3NMBK52 | 195 |
| DCM27W2OL3NMBK52 | 195 |
| DCM27W2P-NMC-76 | 195 |
| DCM27W2P1A0NNMBK52 | 195 |
| DCM27W2P1A7NNMBK52 | 195 |
| DCM27W2P1A9NNMBK52 | 195 |
| DCM27W2PF179ANMBK52 | 195 |
| DCM27W2PK87 | 78 |
| DCM27W2PNM | 188 |
| DCM27W2PNMBK52 | 195 |
| DCM27W2POL3NMBK52 | 195 |
| DCM27W2S1A0NNMBK52 | 195 |
| DCM27W2S1A7NNMBK52 | 195 |
| DCM27W2S1A9NNMBK52 | 195 |
| DCM27W2SA197 | 79 |
| DCM27W2SF179ANMBK52 | 195 |
| DCM27W2SNM | 189 |
| DCM27W2SNMBK52 | 195 |
| DCM37P | 140 |
| DCM37P1A0NNMBK52 | 195 |
| DCM37P1A7NNMBK52 | 195 |
| DCM37P1A9NNMBK52 | 195 |
| DCM37PA | 132 |
| DCM37PB | 136 |
| DCM37PC | 134 |
| DCM37PD | 132 |
| DCM37PE | 136 |
| DCM37PF | 134 |
| DCM37PF179 | 138 |
| DCM37PF179A | 138 |
| DCM37PF179ANMBK52 | 195 |
| DCM37PG | 132 |
| DCM37PH | 136 |
| DCM37PK | 134 |
| DCM37PL | 132 |
| DCM37PLNM | 174 |
| DCM37PM | 136 |
| DCM37PNM | 180 |
| DCM37PNM*1A7N | 178 |
| DCM37PNM*1A9N | 178 |
| DCM37PNM*1AON | 176 |
| DCM37PNMB76 | 195 |
| DCM37PNMB77 | 195 |
| DCM37PNMBK52 | 195 |
| DCM37PNMC76 | 195 |
| DCM37POL3NM | 172 |
| DCM37POL3NMBK52 | 195 |
| DCM37PP | 134 |
| DCM37PR | 134 |
| DCM37PS | 132 |
| DCM37PW | 132 |
| DCM37PX | 136 |
| DCM37PZ | 136 |
| DCM37S | 141 |
| DCM37S1A0NNMBK52 | 195 |
| DCM37S1A7NNMBK52 | 195 |
| DCM37S1A9NNMBK52 | 195 |
| DCM37SA | 133 |
| DCM37SB | 137 |
| DCM37SC | 135 |
| DCM37SD | 133 |
| DCM37SE | 137 |
| DCM37SF | 135 |
| DCM37SF179 | 139 |
| DCM37SF179A | 139 |
| DCM37SF179ANMBK52 | 195 |
| DCM37SG | 133 |
| DCM37SH | 137 |
| DCM37SK | 135 |
| DCM37SL | 133 |
| DCM37SLNM | 175 |
| DCM37SM | 137 |
| DCM37SNM | 181 |
| DCM37SNM*1A7N | 179 |
| DCM37SNM*1A9N | 179 |
| DCM37SNM*1AON | 177 |
| DCM37SNMB77 | 195 |
| DCM37SNMBK52 | 195 |
| DCM37SOL3NM | 173 |
| DCM37SOL3NMBK52 | 195 |
| DCM37SP | 135 |
| DCM37SR | 135 |
| DCM37SS | 133 |
| DCM37SW | 133 |
| DCM37SX | 137 |
| DCM37SZ | 137 |
| DCM50PC | 134 |
| DCM8W8PK87 | 78 |
| DCM8W8PNM | 188 |
| DCM8W8PNMB76 | 195 |
| DCM8W8PNMBK52 | 195 |
| DCM8W8PNMC76 | 195 |
| DCM8W8SA197 | 79 |
| DCM8W8SNM | 189 |
| DCM8W8SNMB76 | 195 |
| DCM8W8SNMBK52 | 195 |
| DCMA37PNM | 182 |
| DCMA37PNMBK52 | 195 |
| DCMA37SNM | 183 |
| DCMA37SNMBK52 | 195 |
| DCMA62PNM | 184 |
| DCMA62SNM | 185 |
| DCMAY37PNM | 182 |
| DCMAY37SNM | 183 |
| DCMAY62PNM | 184 |
| DCMAY62SNM | 185 |
| DCMB-17W5S-NMB-76 | 195 |
| DCMB-37S-NMB-77 | 195 |
| DCMB-37S-NMC-77 | 195 |
| DCMB37S-NMB-76 | 195 |
| DCMB37S-NMC-76 | 195 |
| DCMC13C6PJK87 | 44 |
| DCMC13C6PVK87 | 50 |
| DCMC13C6SJA197 | 45 |
| DCMC13C6SVA197 | 51 |
| DCMC13H6PJK87 | 60 |
| DCMC13H6SJA197 | 61 |
| DCMC13P6PVK87 | 64 |
| DCMC13P6SVA197 | 65 |
| DCMC17C5PJK87 | 44 |
| DCMC17C5PVK87 | 50 |
| DCMC17C5SJA197 | 45 |
| DCMC17C5SVA197 | 51 |
| DCMC17H5PJK87 | 60 |
| DCMC17H5SJA197 | 61 |
| DCMC17P5PVK87 | 64 |
| DCMC17P5SVA197 | 65 |
| DCMC21CA4PJK87 | 44 |
| DCMC21CA4PVK87 | 50 |
| DCMC21CA4SJA197 | 45 |
| DCMC21CA4SVA197 | 51 |
| DCMC21HA4PJK87 | 60 |
| DCMC21HA4SJA197 | 61 |
| DCMC21PA4PVK87 | 64 |
| DCMC21PA4SVA197 | 65 |
| DCMC25C3PJK87 | 44 |
| DCMC25C3PVK87 | 50 |
| DCMC25C3SJA197 | 45 |
| DCMC25C3SVA197 | 51 |
| DCMC25H3PJK87 | 60 |
| DCMC25H3SJA197 | 61 |
| DCMC25P3PVK87 | 64 |
| DCMC25P3SVA197 | 65 |
| DCMC27C2PJK87 | 44 |
| DCMC27C2PVK87 | 50 |
| DCMC27C2SJA197 | 45 |
| DCMC27C2SVA197 | 51 |
| DCMC27H2PJK87 | 60 |
| DCMC27H2SJA197 | 61 |
| DCMC27P2PVK87 | 64 |
| DCMC27P2SVA197 | 65 |
| DCMC37PJK87 | 16 |
| DCMC37SJA197 | 17 |
| DCMC8C8PJK87 | 44 |
| DCMC8C8PVK87 | 50 |
| DCMC8C8SJA197 | 45 |
| DCMC8C8SVA197 | 51 |
| DCMC8H8PJK87 | 60 |
| DCMC8H8SJA197 | 61 |
| DCMC8P8PVK87 | 64 |
| DCMC8P8SVA197 | 65 |
| DCMD13C6PJK87 | 44 |
| DCMD13C6PVK87 | 50 |
| DCMD13C6SJA197 | 45 |
| DCMD13C6SVA197 | 51 |
| DCMD13H6PJK87 | 60 |
| DCMD13H6SJA197 | 61 |
| DCMD13P6PVK87 | 64 |
| DCMD13P6SVA197 | 65 |
| DCMD17C5PJK87 | 44 |
| DCMD17C5PVK87 | 50 |
| DCMD17C5SJA197 | 45 |
| DCMD17C5SVA197 | 51 |
| DCMD17H5PJK87 | 60 |
| DCMD17H5SJA197 | 61 |
| DCMD17P5PVK87 | 64 |
| DCMD17P5SVA197 | 65 |
| DCMD21CA4PJK87 | 44 |
| DCMD21CA4PVK87 | 50 |
| DCMD21CA4SJA197 | 45 |
| DCMD21CA4SVA197 | 51 |
| DCMD21HA4PJK87 | 60 |
| DCMD21HA4SJA197 | 61 |
| DCMD21PA4PVK87 | 64 |
| DCMD21PA4SVA197 | 65 |
| DCMD25C3PJK87 | 44 |
| DCMD25C3PVK87 | 50 |
| DCMD25C3SJA197 | 45 |
| DCMD25C3SVA197 | 51 |
| DCMD25H3PJK87 | 60 |
| DCMD25H3SJA197 | 61 |
| DCMD25P3PVK87 | 64 |
| DCMD25P3SVA197 | 65 |
| DCMD27C2PJK87 | 44 |
| DCMD27C2PVK87 | 50 |
| DCMD27C2SJA197 | 45 |
| DCMD27C2SVA197 | 51 |
| DCMD27H2PJK87 | 60 |
| DCMD27H2SJA197 | 61 |
| DCMD27P2PVK87 | 64 |
| DCMD27P2SVA197 | 65 |
| DCMD37PJK87 | 16 |
| DCMD37SJA197 | 17 |
| DCMD8C8PJK87 | 44 |
| DCMD8C8PVK87 | 50 |
| DCMD8C8SJA197 | 45 |
| DCMD8C8SVA197 | 51 |
| DCMD8H8PJK87 | 60 |
| DCMD8H8SJA197 | 61 |
| DCMD8P8PVK87 | 64 |
| DCMD8P8SVA197 | 65 |
| DCME13W6PK87 | 78 |
| DCME13W6SA197 | 79 |
| DCME17W5PK87 | 78 |
| DCME17W5SA197 | 79 |
| DCME21WA4PK87 | 78 |
| DCME21WA4SA197 | 79 |
| DCME25W3PK87 | 78 |
| DCME25W3SA197 | 79 |
| DCME27W2PK87 | 78 |
| DCME27W2SA197 | 79 |
| DCME37P | 140 |
| DCME37S | 141 |
| DCME8W8PK87 | 78 |
| DCME8W8SA197 | 79 |
| DCMG13C6PJK87 | 44 |
| DCMG13C6PVK87 | 50 |
| DCMG13C6SJA197 | 45 |
| DCMG13C6SVA197 | 51 |
| DCMG13H6PJK87 | 60 |
| DCMG13H6SJA197 | 61 |
| DCMG13P6PVK87 | 64 |
| DCMG13P6SVA197 | 65 |
| DCMG17C5PJK87 | 44 |
| DCMG17C5PVK87 | 50 |
| DCMG17C5SJA197 | 45 |
| DCMG17C5SVA197 | 51 |
| DCMG17H5PJK87 | 60 |
| DCMG17H5SJA197 | 61 |
| DCMG17P5PVK87 | 64 |
| DCMG17P5SVA197 | 65 |
| DCMG21CA4PJK87 | 44 |
| DCMG21CA4PVK87 | 50 |
| DCMG21CA4SJA197 | 45 |
| DCMG21CA4SVA197 | 51 |
| DCMG21HA4PJK87 | 60 |
| DCMG21HA4SJA197 | 61 |
| DCMG21PA4PVK87 | 64 |
| DCMG21PA4SVA197 | 65 |
| DCMG25C3PJK87 | 44 |
| DCMG25C3PVK87 | 50 |
| DCMG25C3SJA197 | 45 |
| DCMG25C3SVA197 | 51 |
| DCMG25H3PJK87 | 60 |
| DCMG25H3SJA197 | 61 |
| DCMG25P3PVK87 | 64 |
| DCMG25P3SVA197 | 65 |
| DCMG27C2PJK87 | 44 |
| DCMG27C2PVK87 | 50 |
| DCMG27C2SJA197 | 45 |
| DCMG27C2SVA197 | 51 |
| DCMG27H2PJK87 | 60 |
| DCMG27H2SJA197 | 61 |
| DCMG27P2PVK87 | 64 |
| DCMG27P2SVA197 | 65 |
| DCMG37PJK87 | 16 |
| DCMG37SJA197 | 17 |
| DCMG8C8PJK87 | 44 |
| DCMG8C8PVK87 | 50 |
| DCMG8C8SJA197 | 45 |
| DCMG8C8SVA197 | 51 |
| DCMG8H8PJK87 | 60 |
| DCMG8H8SJA197 | 61 |
| DCMG8P8PVK87 | 64 |
| DCMG8P8SVA197 | 65 |
| DCMM13W6P | 166 |
| DCMM13W6S | 167 |
| DCMM17W5P | 166 |
| DCMM17W5S | 167 |
| DCMM21WA4P | 166 |
| DCMM21WA4S | 167 |
| DCMM24W7S | 167 |
| DCMM25W3P | 166 |
| DCMM25W3S | 167 |
| DCMM27W2P | 166 |
| DCMM27W2S | 167 |
| DCMM36W4S | 167 |
| DCMM37P | 140 |
| DCMM37PA | 132 |
| DCMM37PB | 136 |
| DCMM37PC | 134 |
| DCMM37PD | 132 |
| DCMM37PE | 136 |
| DCMM37PF | 134 |
| DCMM37PF179 | 138 |
| DCMM37PF179A | 138 |
| DCMM37PG | 132 |
| DCMM37PH | 136 |
| DCMM37PK | 134 |
| DCMM37PL | 132 |
| DCMM37PM | 136 |
| DCMM37PP | 134 |
| DCMM37PR | 134 |
| DCMM37PS | 132 |






Dimensions are shown in mm (inch)
Dimensions subject to change

| Part Number | Page |
|---|---|
| DCMM37PW | 132 |
| DCMM37PX | 136 |
| DCMM37PZ | 136 |
| DCMM37S | 141 |
| DCMM37SA | 133 |
| DCMM37SB | 137 |
| DCMM37SC | 135 |
| DCMM37SD | 133 |
| DCMM37SE | 137 |
| DCMM37SF | 135 |
| DCMM37SF179 | 139 |
| DCMM37SF179A | 139 |
| DCMM37SG | 133 |
| DCMM37SH | 137 |
| DCMM37SK | 135 |
| DCMM37SL | 133 |
| DCMM37SM | 137 |
| DCMM37SP | 135 |
| DCMM37SR | 135 |
| DCMM37SS | 133 |
| DCMM37SW | 133 |
| DCMM37SX | 137 |
| DCMM37SZ | 137 |
| DCMM43W2S | 167 |
| DCMM47W1S | 167 |
| DCMM8W8P | 166 |
| DCMM8W8S | 167 |
| DCMMC13C6PJ | 146 |
| DCMMC13C6SJ | 147 |
| DCMMC13H6PJ | 154 |
| DCMMC13H6SJ | 155 |
| DCMMC17C5PJ | 146 |
| DCMMC17C5SJ | 147 |
| DCMMC17H5PJ | 154 |
| DCMMC17H5SJ | 155 |
| DCMMC21CA4PJ | 146 |
| DCMMC21CA4SJ | 147 |
| DCMMC21HA4PJ | 154 |
| DCMMC21HA4SJ | 155 |
| DCMMC25C3PJ | 146 |
| DCMMC25C3SJ | 147 |
| DCMMC25H3PJ | 154 |
| DCMMC25H3SJ | 155 |
| DCMMC27C2PJ | 146 |
| DCMMC27C2SJ | 147 |
| DCMMC27H2PJ | 154 |
| DCMMC27H2SJ | 155 |
| DCMMC8C8PJ | 146 |
| DCMMC8C8SJ | 147 |
| DCMMC8H8PJ | 154 |
| DCMMC8H8SJ | 155 |
| DCMMD13C6PJ | 146 |
| DCMMD13C6SJ | 147 |
| DCMMD13H6PJ | 154 |
| DCMMD13H6SJ | 155 |
| DCMMD17C5PJ | 146 |
| DCMMD17C5SJ | 147 |
| DCMMD17H5PJ | 154 |
| DCMMD17H5SJ | 155 |
| DCMMD21CA4PJ | 146 |
| DCMMD21CA4SJ | 147 |
| DCMMD21HA4PJ | 154 |
| DCMMD21HA4SJ | 155 |
| DCMMD25C3PJ | 146 |
| DCMMD25C3SJ | 147 |
| DCMMD25H3PJ | 154 |
| DCMMD25H3SJ | 155 |
| DCMMD27C2PJ | 146 |
| DCMMD27C2SJ | 147 |
| DCMMD27H2PJ | 154 |
| DCMMD27H2SJ | 155 |
| DCMMD8C8PJ | 146 |
| DCMMD8C8SJ | 147 |
| DCMMD8H8PJ | 154 |
| DCMMD8H8SJ | 155 |
| DCMME13W6P | 166 |
| DCMME13W6S | 167 |
| DCMME17W5P | 166 |
| DCMME17W5S | 167 |
| DCMME21WA4P | 166 |
| DCMME21WA4S | 167 |
| DCMME24W7S | 167 |
| DCMME25W3P | 166 |
| DCMME25W3S | 167 |
| DCMME27W2P | 166 |
| DCMME27W2S | 167 |
| DCMME36W4S | 167 |
| DCMME37P | 140 |
| DCMME37S | 141 |
| DCMME43W2S | 167 |
| DCMME47W1S | 167 |
| DCMME8W8P | 166 |
| DCMME8W8S | 167 |
| DCMMG13C6PJ | 146 |
| DCMMG13C6SJ | 147 |
| DCMMG13H6PJ | 154 |
| DCMMG13H6SJ | 155 |
| DCMMG17C5PJ | 146 |
| DCMMG17C5SJ | 147 |
| DCMMG17H5PJ | 154 |
| DCMMG17H5SJ | 155 |
| DCMMG21CA4PJ | 146 |
| DCMMG21CA4SJ | 147 |
| DCMMG21HA4PJ | 154 |
| DCMMG21HA4SJ | 155 |
| DCMMG25C3PJ | 146 |
| DCMMG25C3SJ | 147 |
| DCMMG25H3PJ | 154 |
| DCMMG25H3SJ | 155 |
| DCMMG27C2PJ | 146 |
| DCMMG27C2SJ | 147 |
| DCMMG27H2PJ | 154 |
| DCMMG27H2SJ | 155 |
| DCMMG8C8PJ | 146 |
| DCMMG8C8SJ | 147 |
| DCMMG8H8PJ | 154 |
| DCMMG8H8SJ | 155 |
| DCMMN13C6PN | 150 |
| DCMMN13C6SN | 151 |
| DCMMN13H6PN | 158 |
| DCMMN13H6SN | 159 |
| DCMMN13V6PN | 162 |
| DCMMN13V6SN | 163 |
| DCMMN17C5PN | 150 |
| DCMMN17C5SN | 151 |
| DCMMN17H5PN | 158 |
| DCMMN17H5SN | 159 |
| DCMMN17V5PN | 162 |
| DCMMN17V5SN | 163 |
| DCMMN21CA4PN | 150 |
| DCMMN21CA4SN | 151 |
| DCMMN21HA4PN | 158 |
| DCMMN21HA4SN | 159 |
| DCMMN21VA4PN | 162 |
| DCMMN21VA4SN | 163 |
| DCMMN25C3PN | 150 |
| DCMMN25C3SN | 151 |
| DCMMN25H3PN | 158 |
| DCMMN25H3SN | 159 |
| DCMMN25V3PN | 162 |
| DCMMN25V3SN | 163 |
| DCMMN27C2PN | 150 |
| DCMMN27C2SN | 151 |
| DCMMN27H2PN | 158 |
| DCMMN27H2SN | 159 |
| DCMMN27V2PN | 162 |
| DCMMN27V2SN | 163 |
| DCMMN8C8PN | 150 |
| DCMMN8C8SN | 151 |
| DCMMN8H8PN | 158 |
| DCMMN8H8SN | 159 |
| DCMMN8V8PN | 162 |
| DCMMN8V8SN | 163 |
| DCMMP13C6PJ | 146 |
| DCMMP13C6SJ | 147 |
| DCMMP13H6PJ | 154 |
| DCMMP13H6SJ | 155 |
| DCMMP17C5PJ | 146 |
| DCMMP17C5SJ | 147 |
| DCMMP17H5PJ | 154 |
| DCMMP17H5SJ | 155 |
| DCMMP21CA4PJ | 146 |
| DCMMP21CA4SJ | 147 |
| DCMMP21HA4PJ | 154 |
| DCMMP21HA4SJ | 155 |
| DCMMP25C3PJ | 146 |
| DCMMP25C3SJ | 147 |
| DCMMP25H3PJ | 154 |
| DCMMP25H3SJ | 155 |
| DCMMP27C2PJ | 146 |
| DCMMP27C2SJ | 147 |
| DCMMP27H2PJ | 154 |
| DCMMP27H2SJ | 155 |
| DCMMP8C8PJ | 146 |
| DCMMP8C8SJ | 147 |
| DCMMP8H8PJ | 154 |
| DCMMP8H8SJ | 155 |
| DCMMV13C6PN | 150 |
| DCMMV13C6SN | 151 |
| DCMMV13H6PN | 158 |
| DCMMV13H6SN | 159 |
| DCMMV13V6PN | 162 |
| DCMMV13V6SN | 163 |
| DCMMV17C5PN | 150 |
| DCMMV17C5SN | 151 |
| DCMMV17H5PN | 158 |
| DCMMV17H5SN | 159 |
| DCMMV17V5PN | 162 |
| DCMMV17V5SN | 163 |
| DCMMV21CA4PN | 150 |
| DCMMV21CA4SN | 151 |
| DCMMV21HA4PN | 158 |
| DCMMV21HA4SN | 159 |
| DCMMV21VA4PN | 162 |
| DCMMV21VA4SN | 163 |
| DCMMV25C3PN | 150 |
| DCMMV25C3SN | 151 |
| DCMMV25H3PN | 158 |
| DCMMV25H3SN | 159 |
| DCMMV25V3PN | 162 |
| DCMMV25V3SN | 163 |
| DCMMV27C2PN | 150 |
| DCMMV27C2SN | 151 |
| DCMMV27H2PN | 158 |
| DCMMV27H2SN | 159 |
| DCMMV27V2PN | 162 |
| DCMMV27V2SN | 163 |
| DCMMV8C8PN | 150 |
| DCMMV8C8SN | 151 |
| DCMMV8H8PN | 158 |
| DCMMV8H8SN | 159 |
| DCMMV8V8PN | 162 |
| DCMMV8V8SN | 163 |
| DCMMY13W6P | 166 |
| DCMMY13W6S | 167 |
| DCMMY17W5P | 166 |
| DCMMY17W5S | 167 |
| DCMMY21WA4P | 166 |
| DCMMY21WA4S | 167 |
| DCMMY24W7S | 167 |
| DCMMY25W3P | 166 |
| DCMMY25W3S | 167 |
| DCMMY27W2P | 166 |
| DCMMY27W2S | 167 |
| DCMMY36W4S | 167 |
| DCMMY37P | 140 |
| DCMMY37S | 141 |
| DCMMY43W2S | 167 |
| DCMMY47W1S | 167 |
| DCMMY8W8P | 166 |
| DCMMY8W8S | 167 |
| DCMMZ13C6PN | 150 |
| DCMMZ13C6SN | 151 |
| DCMMZ13H6PN | 158 |
| DCMMZ13H6SN | 159 |
| DCMMZ13V6PN | 162 |
| DCMMZ13V6SN | 163 |
| DCMMZ17C5PN | 150 |
| DCMMZ17C5SN | 151 |
| DCMMZ17H5PN | 158 |
| DCMMZ17H5SN | 159 |
| DCMMZ17V5PN | 162 |
| DCMMZ17V5SN | 163 |
| DCMMZ21CA4PN | 150 |
| DCMMZ21CA4SN | 151 |
| DCMMZ21HA4PN | 158 |
| DCMMZ21HA4SN | 159 |
| DCMMZ21VA4PN | 162 |
| DCMMZ21VA4SN | 163 |
| DCMMZ25C3PN | 150 |
| DCMMZ25C3SN | 151 |
| DCMMZ25H3PN | 158 |
| DCMMZ25H3SN | 159 |
| DCMMZ25V3PN | 162 |
| DCMMZ25V3SN | 163 |
| DCMMZ27C2PN | 150 |
| DCMMZ27C2SN | 151 |
| DCMMZ27H2PN | 158 |
| DCMMZ27H2SN | 159 |
| DCMMZ27V2PN | 162 |
| DCMMZ27V2SN | 163 |
| DCMMZ8C8PN | 150 |
| DCMMZ8C8SN | 151 |
| DCMMZ8H8PN | 158 |
| DCMMZ8H8SN | 159 |
| DCMMZ8V8PN | 162 |
| DCMMZ8V8SN | 163 |
| DCMN13C6PNK87 | 52 |
| DCMN13C6PYK87 | 56 |
| DCMN13C6SNA197 | 53 |
| DCMN13C6SYA197 | 57 |
| DCMN13H6PNK87 | 66 |
| DCMN13H6PYK87 | 70 |
| DCMN13H6SNA197 | 67 |
| DCMN13H6SYA197 | 71 |
| DCMN17C5PNK87 | 52 |
| DCMN17C5PYK87 | 56 |
| DCMN17C5SNA197 | 53 |
| DCMN17C5SYA197 | 57 |
| DCMN17H5PNK87 | 66 |
| DCMN17H5PYK87 | 70 |
| DCMN17H5SNA197 | 67 |
| DCMN17H5SYA197 | 71 |
| DCMN21CA4PNK87 | 52 |
| DCMN21CA4PYK87 | 56 |
| DCMN21CA4SNA197 | 53 |
| DCMN21CA4SYA197 | 57 |
| DCMN21HA4PNK87 | 66 |
| DCMN21HA4PYK87 | 70 |
| DCMN21HA4SNA197 | 67 |
| DCMN21HA4SYA197 | 71 |
| DCMN25C3PNK87 | 52 |
| DCMN25C3PYK87 | 56 |
| DCMN25C3SNA197 | 53 |
| DCMN25C3SYA197 | 57 |
| DCMN25H3PNK87 | 66 |
| DCMN25H3PYK87 | 70 |
| DCMN25H3SNA197 | 67 |
| DCMN25H3SYA197 | 71 |
| DCMN27C2PNK87 | 52 |
| DCMN27C2PYK87 | 56 |
| DCMN27C2SNA197 | 53 |
| DCMN27C2SYA197 | 57 |
| DCMN27H2PNK87 | 66 |
| DCMN27H2PYK87 | 70 |
| DCMN27H2SNA197 | 67 |
| DCMN27H2SYA197 | 71 |
| DCMN37PNK87 | 6 |
| DCMN37SNA197 | 7 |
| DCMN8C8PNK87 | 52 |
| DCMN8C8PYK87 | 56 |
| DCMN8C8SNA197 | 53 |
| DCMN8C8SYA197 | 57 |
| DCMN8H8PNK87 | 66 |
| DCMN8H8PYK87 | 70 |
| DCMN8H8SNA197 | 67 |
| DCMN8H8SYA197 | 71 |
| DCMP13C6PJK87 | 44 |
| DCMP13C6PVK87 | 50 |
| DCMP13C6SJA197 | 45 |
| DCMP13C6SVA197 | 51 |
| DCMP13H6PJK87 | 60 |
| DCMP13H6SJA197 | 61 |
| DCMP13P6PVK87 | 64 |
| DCMP13P6SVA197 | 65 |
| DCMP17C5PJK87 | 44 |
| DCMP17C5PVK87 | 50 |
| DCMP17C5SJA197 | 45 |
| DCMP17C5SVA197 | 51 |
| DCMP17H5PJK87 | 60 |
| DCMP17H5SJA197 | 61 |
| DCMP17P5PVK87 | 64 |

| Part Number | Page |
|---|---|
| DCMP17P5SVA197 | 65 |
| DCMP21CA4PJK87 | 44 |
| DCMP21CA4PVK87 | 50 |
| DCMP21CA4SJA197 | 45 |
| DCMP21CA4SVA197 | 51 |
| DCMP21HA4PJK87 | 60 |
| DCMP21HA4SJA197 | 61 |
| DCMP21PA4PVK87 | 64 |
| DCMP21PA4SVA197 | 65 |
| DCMP25C3PJK87 | 44 |
| DCMP25C3PVK87 | 50 |
| DCMP25C3SJA197 | 45 |
| DCMP25C3SVA197 | 51 |
| DCMP25H3PJK87 | 60 |
| DCMP25H3SJA197 | 61 |
| DCMP25P3PVK87 | 64 |
| DCMP25P3SVA197 | 65 |
| DCMP27C2PJK87 | 44 |
| DCMP27C2PVK87 | 50 |
| DCMP27C2SJA197 | 45 |
| DCMP27C2SVA197 | 51 |
| DCMP27H2PJK87 | 60 |
| DCMP27H2SJA197 | 61 |
| DCMP27P2PVK87 | 64 |
| DCMP27P2SVA197 | 65 |
| DCMP37PJK87 | 16 |
| DCMP37SJA197 | 17 |
| DCMP8C8PJK87 | 44 |
| DCMP8C8PVK87 | 50 |
| DCMP8C8SJA197 | 45 |
| DCMP8C8SVA197 | 51 |
| DCMP8H8PJK87 | 60 |
| DCMP8H8SJA197 | 61 |
| DCMP8P8PVK87 | 64 |
| DCMP8P8SVA197 | 65 |
| DCMV13C6PNK87 | 52 |
| DCMV13C6PYK87 | 56 |
| DCMV13C6SNA197 | 53 |
| DCMV13C6SYA197 | 57 |
| DCMV13H6PNK87 | 66 |
| DCMV13H6PYK87 | 70 |
| DCMV13H6SNA197 | 67 |
| DCMV13H6SYA197 | 71 |
| DCMV17C5PNK87 | 52 |
| DCMV17C5PYK87 | 56 |
| DCMV17C5SNA197 | 53 |
| DCMV17C5SYA197 | 57 |
| DCMV17H5PNK87 | 66 |
| DCMV17H5PYK87 | 70 |
| DCMV17H5SNA197 | 67 |
| DCMV17H5SYA197 | 71 |
| DCMV21CA4PNK87 | 52 |
| DCMV21CA4PYK87 | 56 |
| DCMV21CA4SNA197 | 53 |
| DCMV21CA4SYA197 | 57 |
| DCMV21HA4PNK87 | 66 |
| DCMV21HA4PYK87 | 70 |
| DCMV21HA4SNA197 | 67 |
| DCMV21HA4SYA197 | 71 |
| DCMV25C3PNK87 | 52 |
| DCMV25C3PYK87 | 56 |
| DCMV25C3SNA197 | 53 |
| DCMV25C3SYA197 | 57 |
| DCMV25H3PNK87 | 66 |
| DCMV25H3PYK87 | 70 |
| DCMV25H3SNA197 | 67 |
| DCMV25H3SYA197 | 71 |
| DCMV27C2PNK87 | 52 |
| DCMV27C2PYK87 | 56 |
| DCMV27C2SNA197 | 53 |
| DCMV27C2SYA197 | 57 |
| DCMV27H2PNK87 | 66 |
| DCMV27H2PYK87 | 70 |
| DCMV27H2SNA197 | 67 |
| DCMV27H2SYA197 | 71 |
| DCMV37PNK87 | 6 |
| DCMV37SNA197 | 7 |
| DCMV8C8PNK87 | 52 |
| DCMV8C8PYK87 | 56 |
| DCMV8C8SNA197 | 53 |
| DCMV8C8SYA197 | 57 |
| DCMV8H8PNK87 | 66 |
| DCMV8H8PYK87 | 70 |
| DCMV8H8SNA197 | 67 |
| DCMV8H8SYA197 | 71 |
| DCMY13W6PK87 | 78 |
| DCMY13W6PNM | 188 |
| DCMY13W6SA197 | 79 |
| DCMY13W6SNM | 189 |
| DCMY17W5PK87 | 78 |
| DCMY17W5PNM | 188 |
| DCMY17W5SA197 | 79 |
| DCMY17W5SNM | 189 |
| DCMY21WA4PK87 | 78 |
| DCMY21WA4PNM | 188 |
| DCMY21WA4SA197 | 79 |
| DCMY21WA4SNM | 189 |
| DCMY25W3PK87 | 78 |
| DCMY25W3PNM | 188 |
| DCMY25W3SA197 | 79 |
| DCMY25W3SNM | 189 |
| DCMY27W2PK87 | 78 |
| DCMY27W2PNM | 188 |
| DCMY27W2SA197 | 79 |
| DCMY27W2SNM | 189 |
| DCMY37P | 140 |
| DCMY37PNM | 180 |
| DCMY37PNM*1AON | 176 |
| DCMY37POL3NM | 172 |
| DCMY37S | 141 |
| DCMY37SNM | 181 |
| DCMY37SNM*1AON | 177 |
| DCMY37SOL3NM | 173 |
| DCMY8W8PK87 | 78 |
| DCMY8W8PNM | 188 |
| DCMY8W8SA197 | 79 |
| DCMY8W8SNM | 189 |
| DCMZ13C6PNK87 | 52 |
| DCMZ13C6PYK87 | 56 |
| DCMZ13C6SNA197 | 53 |
| DCMZ13C6SYA197 | 57 |
| DCMZ13H6PNK87 | 66 |
| DCMZ13H6PYK87 | 70 |
| DCMZ13H6SNA197 | 67 |
| DCMZ13H6SYA197 | 71 |
| DCMZ17C5PNK87 | 52 |
| DCMZ17C5PYK87 | 56 |
| DCMZ17C5SNA197 | 53 |
| DCMZ17C5SYA197 | 57 |
| DCMZ17H5PNK87 | 66 |
| DCMZ17H5PYK87 | 70 |
| DCMZ17H5SNA197 | 67 |
| DCMZ17H5SYA197 | 71 |
| DCMZ21CA4PNK87 | 52 |
| DCMZ21CA4PYK87 | 56 |
| DCMZ21CA4SNA197 | 53 |
| DCMZ21CA4SYA197 | 57 |
| DCMZ21HA4PNK87 | 66 |
| DCMZ21HA4PYK87 | 70 |
| DCMZ21HA4SNA197 | 67 |
| DCMZ21HA4SYA197 | 71 |
| DCMZ25C3PNK87 | 52 |
| DCMZ25C3PYK87 | 56 |
| DCMZ25C3SNA197 | 53 |
| DCMZ25C3SYA197 | 57 |
| DCMZ25H3PNK87 | 66 |
| DCMZ25H3PYK87 | 70 |
| DCMZ25H3SNA197 | 67 |
| DCMZ25H3SYA197 | 71 |
| DCMZ27C2PNK87 | 52 |
| DCMZ27C2PYK87 | 56 |
| DCMZ27C2SNA197 | 53 |
| DCMZ27C2SYA197 | 57 |
| DCMZ27H2PNK87 | 66 |
| DCMZ27H2PYK87 | 70 |
| DCMZ27H2SNA197 | 67 |
| DCMZ27H2SYA197 | 71 |
| DCMZ37PNK87 | 6 |
| DCMZ37SNA197 | 7 |
| DCMZ8C8PNK87 | 52 |
| DCMZ8C8PYK87 | 56 |
| DCMZ8C8SNA197 | 53 |
| DCMZ8C8SYA197 | 57 |
| DCMZ8H8PNK87 | 66 |
| DCMZ8H8PYK87 | 70 |
| DCMZ8H8SNA197 | 67 |
| DCNG37P-P1 | 4 |
| DCNG37S-P1 | 5 |
| DCNGE37P-P1 | 4 |
| DCNGE37S-P1 | 5 |
| DCNGL37P-P1 | 4 |
| DCNGL37S-P1 | 5 |
| DCNGX37P-P1 | 4 |
| DCNGX37S-P1 | 5 |
| DCNGZ37P-P1 | 4 |
| DCNGZ37S-P1 | 5 |
| DCW37P* | 38 |
| DCW37P*G | 38 |
| DCW37S* | 39 |
| DCW37S*G | 39 |
| DCWE37P* | 38 |
| DCWE37P*G | 38 |
| DCWE37S* | 39 |
| DCWE37S*G | 39 |
| DCX37P-0L2-K87-146 | 10 |
| DCX37PK87 | 32 |
| DCX37S-0L2-A197-146 | 11 |
| DCX37SA197 | 33 |
| DD-59-20 | 195, 218 |
| DD-60-20 | 195, 218 |
| DD115339-24 | 205 |
| DD115339-4 | 207 |
| DD115386-103A | 195 |
| DD121073-153 | 200 |
| DD121073-53 | 200 |
| DD19678-161 | 193, 195 |
| DD19678-172 | 195 |
| DD19678-176 | 195 |
| DD19678-4 | 204 |
| DD19977-4 | 204 |
| DD19977-44 | 193, 195 |
| DD20964 | 203 |
| DD20964-19 | 192 |
| DD21961 | 214 |
| DD21962 | 215 |
| DD24661 | 203 |
| DD24661-13 | 192, 195 |
| DD50908-1 | 218 |
| DD50P-0L2-K87 | 10 |
| DD50P-1A5N-K87 | 26 |
| DD50P-1A6N-K87 | 26 |
| DD50P-1A7N-K87 | 22 |
| DD50P-1A8N-K87 | 22 |
| DD50P-1A9N-K87 | 22 |
| DD50P-1ADN-K87 | 24 |
| DD50P-1AFN-K87 | 22 |
| DD50P-1AJN-K87 | 24 |
| DD50P-1AON-K87 | 20 |
| DD50P-1ATN-K87 | 26 |
| DD50P-1AUN-K87 | 26 |
| DD50P-1AVN-K87 | 24 |
| DD50P-1AWN-K87 | 24 |
| DD50P-F179A-K87 | 12 |
| DD50PK87 | 32 |
| DD50S-0L2-A197 | 11 |
| DD50S-1A5N-A197 | 27 |
| DD50S-1A6N-A197 | 27 |
| DD50S-1A7N-A197 | 23 |
| DD50S-1A8N-A197 | 23 |
| DD50S-1A9N-A197 | 23 |
| DD50S-1ADN-A197 | 25 |
| DD50S-1AFN-A197 | 23 |
| DD50S-1AJN-A197 | 25 |
| DD50S-1AON-A197 | 21 |
| DD50S-1ATN-A197 | 27 |
| DD50S-1AUN-A197 | 27 |
| DD50S-1AVN-A197 | 25 |
| DD50S-1AWN-A197 | 25 |
| DD50S-F179A-A197 | 13 |
| DD50SA197 | 33 |
| DD51216 | 206 |
| DD51217 | 206 |
| DD51223-1 | 210 |
| DD53750-4 | 218 |
| DDA24W7PK87F0 | 80 |
| DDA24W7SA197F0 | 81 |
| DDA36W4PK87F0 | 80 |
| DDA36W4SA197F0 | 81 |
| DDE50P-0L2-K87-146 | 10 |
| DDE50PK87 | 32 |
| DDE50S-0L2-A197-146 | 11 |
| DDE50SA197 | 33 |
| DDJK50P*-OL4 | 120 |
| DDJKE50P*-OL4 | 120 |
| DDJKE50P*-OL4-146 | 120 |
| DDJKX50P*-OL4 | 120 |
| DDJKX50P*-OL4-146 | 120 |
| DDM-24W7P-1A0N-K87 | 74 |
| DDM-24W7P-1A7N-K87 | 74 |
| DDM-24W7P-NMB-77 | 195 |
| DDM-24W7P-NMC-76 | 195 |
| DDM-24W7P-OL2-K87 | 76 |
| DDM-24W7P-OL4-K87 | 76 |
| DDM-24W7S-1A0N-A197 | 75 |
| DDM-24W7S-1A7N-A197 | 75 |
| DDM-24W7S-NMB-76 | 195 |
| DDM-24W7S-NMC-76 | 195 |
| DDM-24W7S-OL2-A197 | 77 |
| DDM-24W7S-OL4-A197 | 77 |
| DDM-36W4P-1A0N-K87 | 74 |
| DDM-36W4P-1A7N-K87 | 74 |
| DDM-36W4P-NMB-77 | 195 |
| DDM-36W4P-OL2-K87 | 76 |
| DDM-36W4P-OL4-K87 | 76 |
| DDM-36W4S-1A0N-A197 | 75 |
| DDM-36W4S-1A7N-A197 | 75 |
| DDM-36W4S-NMB-77 | 195 |
| DDM-36W4S-NMC-76 | 195 |
| DDM-36W4S-OL2-A197 | 77 |
| DDM-36W4S-OL4-A197 | 77 |
| DDM-43W2P-1A0N-K87 | 74 |
| DDM-43W2P-1A7N-K87 | 74 |
| DDM-43W2P-OL2-K87 | 76 |
| DDM-43W2P-OL4-K87 | 76 |
| DDM-43W2S-1A0N-A197 | 75 |
| DDM-43W2S-1A7N-A197 | 75 |
| DDM-43W2S-NMB-77 | 195 |
| DDM-43W2S-NMC-76 | 195 |
| DDM-43W2S-OL2-A197 | 77 |
| DDM-43W2S-OL4-A197 | 77 |
| DDM-47W1P-1A0N-K87 | 74 |
| DDM-47W1P-1A7N-K87 | 74 |
| DDM-47W1P-OL2-K87 | 76 |
| DDM-47W1P-OL4-K87 | 76 |
| DDM-47W1S-1A0N-A197 | 75 |
| DDM-47W1S-1A7N-A197 | 75 |
| DDM-47W1S-NMC-76 | 195 |
| DDM-47W1S-OL2-A197 | 77 |
| DDM-47W1S-OL4-A197 | 77 |
| DDM-50P-NMC-77 | 195 |
| DDM-50S-NMC-76 | 195 |
| DDM-50S-NMC-77 | 195 |
| DDM24W7P1A0NNMBK52 | 195 |
| DDM24W7P1A7NNMBK52 | 195 |
| DDM24W7P1A9NNMBK52 | 195 |
| DDM24W7PF179ANMBK52 | 195 |
| DDM24W7PK87 | 78 |
| DDM24W7PNM | 188 |
| DDM24W7PNMB76 | 195 |
| DDM24W7PNMBK52 | 195 |
| DDM24W7POL3NMBK52 | 195 |
| DDM24W7S1A0NNMBK52 | 195 |
| DDM24W7S1A7NNMBK52 | 195 |
| DDM24W7S1A9NNMBK52 | 195 |
| DDM24W7SA197 | 79 |
| DDM24W7SF179ANMBK52 | 195 |
| DDM24W7SNM | 189 |
| DDM24W7SNMB77 | 195 |
| DDM24W7SNMBK52 | 195 |
| DDM24W7SOL3NMBK52 | 195 |
| DDM36W4P1A0NNMBK52 | 195 |
| DDM36W4P1A7NNMBK52 | 195 |
| DDM36W4P1A9NNMBK52 | 195 |
| DDM36W4PF179ANMBK52 | 195 |
| DDM36W4PK87 | 78 |
| DDM36W4PNM | 188 |
| DDM36W4PNMBK52 | 195 |
| DDM36W4POL3NMBK52 | 195 |
| DDM36W4S1A0NNMBK52 | 195 |
| DDM36W4S1A7NNMBK52 | 195 |
| DDM36W4S1A9NNMBK52 | 195 |






Dimensions are shown in mm (inch)
Dimensions subject to change

| Part Number | Page |
|---|---|
| DDM36W4SA197 | 79 |
| DDM36W4SF179ANMBK52 | 195 |
| DDM36W4SNM | 189 |
| DDM36W4SNMB76 | 195 |
| DDM36W4SNMBK52 | 195 |
| DDM36W4SOL3NMBK52 | 195 |
| DDM43W2P-NMB-77 | 195 |
| DDM43W2P1A0NNMBK52 | 195 |
| DDM43W2P1A7NNMBK52 | 195 |
| DDM43W2P1A9NNMBK52 | 195 |
| DDM43W2PF179ANMBK52 | 195 |
| DDM43W2PK87 | 78 |
| DDM43W2PNM | 188 |
| DDM43W2PNMBK52 | 195 |
| DDM43W2POL3NMBK52 | 195 |
| DDM43W2S1A0NNMBK52 | 195 |
| DDM43W2S1A7NNMBK52 | 195 |
| DDM43W2S1A9NNMBK52 | 195 |
| DDM43W2SA197 | 79 |
| DDM43W2SF179ANMBK52 | 195 |
| DDM43W2SNM | 189 |
| DDM43W2SNMBK52 | 195 |
| DDM43W2SOL3NMBK52 | 195 |
| DDM47W1P-NMC-76 | 195 |
| DDM47W1P1A0NNMBK52 | 195 |
| DDM47W1P1A7NNMBK52 | 195 |
| DDM47W1P1A9NNMBK52 | 195 |
| DDM47W1PF179ANMBK52 | 195 |
| DDM47W1PK87 | 78 |
| DDM47W1PNM | 188 |
| DDM47W1PNMBK52 | 195 |
| DDM47W1POL3NMBK52 | 195 |
| DDM47W1S1A0NNMBK52 | 195 |
| DDM47W1S1A7NNMBK52 | 195 |
| DDM47W1S1A9NNMBK52 | 195 |
| DDM47W1SA197 | 79 |
| DDM47W1SF179ANMBK52 | 195 |
| DDM47W1SNM | 189 |
| DDM47W1SNMBK52 | 195 |
| DDM47W1SOL3NMBK52 | 195 |
| DDM50P | 140 |
| DDM50P1A0NNMBK52 | 195 |
| DDM50P1A7NNMBK52 | 195 |
| DDM50P1A9NNMBK52 | 195 |
| DDM50PA | 132 |
| DDM50PB | 136 |
| DDM50PD | 132 |
| DDM50PE | 136 |
| DDM50PF | 134 |
| DDM50PF179 | 138 |
| DDM50PF179A | 138 |
| DDM50PF179ANMBK52 | 195 |
| DDM50PG | 132 |
| DDM50PH | 136 |
| DDM50PK | 134 |
| DDM50PL | 132 |
| DDM50PLNM | 174 |
| DDM50PM | 136 |
| DDM50PNM | 180 |
| DDM50PNM*1A7N | 178 |
| DDM50PNM*1A9N | 178 |
| DDM50PNM*1AON | 176 |
| DDM50PNMB76 | 195 |
| DDM50PNMB77 | 195 |
| DDM50PNMBK52 | 195 |
| DDM50PNMC76 | 195 |
| DDM50POL3NM | 172 |
| DDM50POL3NMBK52 | 195 |
| DDM50PP | 134 |
| DDM50PR | 134 |
| DDM50PS | 132 |
| DDM50PW | 132 |
| DDM50PX | 136 |
| DDM50PZ | 136 |
| DDM50S | 141 |
| DDM50S1A0NNMBK52 | 195 |
| DDM50S1A7NNMBK52 | 195 |
| DDM50S1A9NNMBK52 | 195 |
| DDM50SA | 133 |
| DDM50SB | 137 |
| DDM50SC | 135 |
| DDM50SD | 133 |
| DDM50SE | 137 |
| DDM50SF | 135 |
| DDM50SF179 | 139 |
| DDM50SF179A | 139 |
| DDM50SF179ANMBK52 | 195 |
| DDM50SG | 133 |
| DDM50SH | 137 |
| DDM50SK | 135 |
| DDM50SL | 133 |
| DDM50SLNM | 175 |
| DDM50SM | 137 |
| DDM50SNM | 181 |
| DDM50SNM*1A7N | 179 |
| DDM50SNM*1A9N | 179 |
| DDM50SNM*1AON | 177 |
| DDM50SNMB76 | 195 |
| DDM50SNMB77 | 195 |
| DDM50SNMBK52 | 195 |
| DDM50SOL3NM | 173 |
| DDM50SOL3NMBK52 | 195 |
| DDM50SP | 135 |
| DDM50SR | 135 |
| DDM50SS | 133 |
| DDM50SW | 133 |
| DDM50SX | 137 |
| DDM50SZ | 137 |
| DDMA50PNM | 182 |
| DDMA50PNMBK52 | 195 |
| DDMA50SNM | 183 |
| DDMA50SNMBK52 | 195 |
| DDMA78PNM | 184 |
| DDMA78SNM | 185 |
| DDMAY50PNM | 182 |
| DDMAY50SNM | 183 |
| DDMAY78PNM | 184 |
| DDMAY78SNM | 185 |
| DDMB-247S-NMB-76 | 195 |
| DDMB-50S-NMB-77 | 195 |
| DDMB-50S-NMC-77 | 195 |
| DDMB50S-NMB-76 | 195 |
| DDMB50S-NMC-76 | 195 |
| DDMC24C7PJK87 | 46 |
| DDMC24C7SJA197 | 47 |
| DDMC24H7PJK87 | 62 |
| DDMC24H7SJA197 | 63 |
| DDMC36C4PJK87 | 46 |
| DDMC36C4SJA197 | 47 |
| DDMC36H4PJK87 | 62 |
| DDMC36H4SJA197 | 63 |
| DDMC43C2PJK87 | 46 |
| DDMC43C2SJA197 | 47 |
| DDMC43H2PJK87 | 62 |
| DDMC43H2SJA197 | 63 |
| DDMC47C1PJK87 | 46 |
| DDMC47C1SJA197 | 47 |
| DDMC47H1PJK87 | 62 |
| DDMC47H1SJA197 | 63 |
| DDMC50PJK87 | 16 |
| DDMC50SJA197 | 17 |
| DDMD24C7PJK87 | 46 |
| DDMD24C7SJA197 | 47 |
| DDMD24H7PJK87 | 62 |
| DDMD24H7SJA197 | 63 |
| DDMD36C4PJK87 | 46 |
| DDMD36C4SJA197 | 47 |
| DDMD36H4PJK87 | 62 |
| DDMD36H4SJA197 | 63 |
| DDMD43C2PJK87 | 46 |
| DDMD43C2SJA197 | 47 |
| DDMD43H2PJK87 | 62 |
| DDMD43H2SJA197 | 63 |
| DDMD47C1PJK87 | 46 |
| DDMD47C1SJA197 | 47 |
| DDMD47H1PJK87 | 62 |
| DDMD47H1SJA197 | 63 |
| DDMD50PJK87 | 16 |
| DDMD50SJA197 | 17 |
| DDME24W7PK87 | 78 |
| DDME24W7SA197 | 79 |
| DDME36W4PK87 | 78 |
| DDME36W4SA197 | 79 |
| DDME43W2PK87 | 78 |
| DDME43W2SA197 | 79 |
| DDME47W1PK87 | 78 |
| DDME47W1SA197 | 79 |
| DDME50P | 140 |
| DDME50S | 141 |
| DDMG24C7PJK87 | 46 |
| DDMG24C7SJA197 | 47 |
| DDMG24H7PJK87 | 62 |
| DDMG24H7SJA197 | 63 |
| DDMG36C4PJK87 | 46 |
| DDMG36C4SJA197 | 47 |
| DDMG36H4PJK87 | 62 |
| DDMG36H4SJA197 | 63 |
| DDMG43C2PJK87 | 46 |
| DDMG43C2SJA197 | 47 |
| DDMG43H2PJK87 | 62 |
| DDMG43H2SJA197 | 63 |
| DDMG47C1PJK87 | 46 |
| DDMG47C1SJA197 | 47 |
| DDMG47H1PJK87 | 62 |
| DDMG47H1SJA197 | 63 |
| DDMG50PJK87 | 16 |
| DDMG50SJA197 | 17 |
| DDMM24W7P | 166 |
| DDMM36W4P | 166 |
| DDMM43W2P | 166 |
| DDMM47W1P | 166 |
| DDMM50P | 140 |
| DDMM50PA | 132 |
| DDMM50PB | 136 |
| DDMM50PC | 134 |
| DDMM50PD | 132 |
| DDMM50PE | 136 |
| DDMM50PF | 134 |
| DDMM50PF179 | 138 |
| DDMM50PF179A | 138 |
| DDMM50PG | 132 |
| DDMM50PH | 136 |
| DDMM50PK | 134 |
| DDMM50PL | 132 |
| DDMM50PM | 136 |
| DDMM50PP | 134 |
| DDMM50PR | 134 |
| DDMM50PS | 132 |
| DDMM50PW | 132 |
| DDMM50PX | 136 |
| DDMM50PZ | 136 |
| DDMM50S | 141 |
| DDMM50SA | 133 |
| DDMM50SB | 137 |
| DDMM50SC | 135 |
| DDMM50SD | 133 |
| DDMM50SE | 137 |
| DDMM50SF | 135 |
| DDMM50SF179 | 139 |
| DDMM50SF179A | 139 |
| DDMM50SG | 133 |
| DDMM50SH | 137 |
| DDMM50SK | 135 |
| DDMM50SL | 133 |
| DDMM50SM | 137 |
| DDMM50SP | 135 |
| DDMM50SR | 135 |
| DDMM50SS | 133 |
| DDMM50SW | 133 |
| DDMM50SX | 137 |
| DDMM50SZ | 137 |
| DDMMC24C7PJ | 148 |
| DDMMC24C7SJ | 149 |
| DDMMC24H7PJ | 156 |
| DDMMC24H7SJ | 157 |
| DDMMC36C4PJ | 148 |
| DDMMC36C4SJ | 149 |
| DDMMC36H4PJ | 156 |
| DDMMC36H4SJ | 157 |
| DDMMC43C2PJ | 148 |
| DDMMC43C2SJ | 149 |
| DDMMC43H2PJ | 156 |
| DDMMC43H2SJ | 157 |
| DDMMC47C1PJ | 148 |
| DDMMC47C1SJ | 149 |
| DDMMC47H1PJ | 156 |
| DDMMC47H1SJ | 157 |
| DDMMD24C7PJ | 148 |
| DDMMD24C7SJ | 149 |
| DDMMD24H7PJ | 156 |
| DDMMD24H7SJ | 157 |
| DDMMD36C4PJ | 148 |
| DDMMD36C4SJ | 149 |
| DDMMD36H4PJ | 156 |
| DDMMD36H4SJ | 157 |
| DDMMD43C2PJ | 148 |
| DDMMD43C2SJ | 149 |
| DDMMD43H2PJ | 156 |
| DDMMD43H2SJ | 157 |
| DDMMD47C1PJ | 148 |
| DDMMD47C1SJ | 149 |
| DDMMD47H1PJ | 156 |
| DDMMD47H1SJ | 157 |
| DDMME24W7P | 166 |
| DDMME36W4P | 166 |
| DDMME43W2P | 166 |
| DDMME47W1P | 166 |
| DDMME50P | 140 |
| DDMME50S | 141 |
| DDMMG24C7PJ | 148 |
| DDMMG24C7SJ | 149 |
| DDMMG24H7PJ | 156 |
| DDMMG24H7SJ | 157 |
| DDMMG36C4PJ | 148 |
| DDMMG36C4SJ | 149 |
| DDMMG36H4PJ | 156 |
| DDMMG36H4SJ | 157 |
| DDMMG43C2PJ | 148 |
| DDMMG43C2SJ | 149 |
| DDMMG43H2PJ | 156 |
| DDMMG43H2SJ | 157 |
| DDMMG47C1PJ | 148 |
| DDMMG47C1SJ | 149 |
| DDMMG47H1PJ | 156 |
| DDMMG47H1SJ | 157 |
| DDMMN24C7PN | 152 |
| DDMMN24C7SN | 153 |
| DDMMN24H7PN | 160 |
| DDMMN24H7SN | 161 |
| DDMMN24V7PN | 164 |
| DDMMN24V7SN | 165 |
| DDMMN36C4PN | 152 |
| DDMMN36C4SN | 153 |
| DDMMN36H4PN | 160 |
| DDMMN36H4SN | 161 |
| DDMMN36V4PN | 164 |
| DDMMN36V4SN | 165 |
| DDMMN43C2PN | 152 |
| DDMMN43C2SN | 153 |
| DDMMN43H2PN | 160 |
| DDMMN43H2SN | 161 |
| DDMMN43V2PN | 164 |
| DDMMN43V2SN | 165 |
| DDMMN47C1PN | 152 |
| DDMMN47C1SN | 153 |
| DDMMN47H1PN | 160 |
| DDMMN47H1SN | 161 |
| DDMMN47V1PN | 164 |
| DDMMN47V1SN | 165 |
| DDMMP24C7PJ | 148 |
| DDMMP24C7SJ | 149 |
| DDMMP24H7PJ | 156 |
| DDMMP24H7SJ | 157 |
| DDMMP36C4PJ | 148 |
| DDMMP36C4SJ | 149 |
| DDMMP36H4PJ | 156 |
| DDMMP36H4SJ | 157 |
| DDMMP43C2PJ | 148 |
| DDMMP43C2SJ | 149 |
| DDMMP43H2PJ | 156 |
| DDMMP43H2SJ | 157 |
| DDMMP47C1PJ | 148 |
| DDMMP47C1SJ | 149 |
| DDMMP47H1PJ | 156 |
| DDMMP47H1SJ | 157 |
| DDMMV24C7PN | 152 |
| DDMMV24C7SN | 153 |
| DDMMV24H7PN | 160 |
| DDMMV24H7SN | 161 |
| DDMMV24V7PN | 164 |
| DDMMV24V7SN | 165 |
| DDMMV36C4PN | 152 |

| Part Number | Page |
|---|---|
| DDMMV36C4SN | 153 |
| DDMMV36H4PN | 160 |
| DDMMV36H4SN | 161 |
| DDMMV36V4PN | 164 |
| DDMMV36V4SN | 165 |
| DDMMV43C2PN | 152 |
| DDMMV43C2SN | 153 |
| DDMMV43H2PN | 160 |
| DDMMV43H2SN | 161 |
| DDMMV43V2PN | 164 |
| DDMMV43V2SN | 165 |
| DDMMV47C1PN | 152 |
| DDMMV47C1SN | 153 |
| DDMMV47H1PN | 160 |
| DDMMV47H1SN | 161 |
| DDMMV47V1PN | 164 |
| DDMMV47V1SN | 165 |
| DDMMY24W7P | 166 |
| DDMMY36W4P | 166 |
| DDMMY43W2P | 166 |
| DDMMY47W1P | 166 |
| DDMMY50P | 140 |
| DDMMY50S | 141 |
| DDMMZ24C7PN | 152 |
| DDMMZ24C7SN | 153 |
| DDMMZ24H7PN | 160 |
| DDMMZ24H7SN | 161 |
| DDMMZ24V7PN | 164 |
| DDMMZ24V7SN | 165 |
| DDMMZ36C4PN | 152 |
| DDMMZ36C4SN | 153 |
| DDMMZ36H4PN | 160 |
| DDMMZ36H4SN | 161 |
| DDMMZ36V4PN | 164 |
| DDMMZ36V4SN | 165 |
| DDMMZ43C2PN | 152 |
| DDMMZ43C2SN | 153 |
| DDMMZ43H2PN | 160 |
| DDMMZ43H2SN | 161 |
| DDMMZ43V2PN | 164 |
| DDMMZ43V2SN | 165 |
| DDMMZ47C1PN | 152 |
| DDMMZ47C1SN | 153 |
| DDMMZ47H1PN | 160 |
| DDMMZ47H1SN | 161 |
| DDMMZ47V1PN | 164 |
| DDMMZ47V1SN | 165 |
| DDMN24C7PNK87 | 54 |
| DDMN24C7PYK87 | 58 |
| DDMN24C7SNA197 | 55 |
| DDMN24C7SYA197 | 59 |
| DDMN24H7PNK87 | 68 |
| DDMN24H7PYK87 | 72 |
| DDMN24H7SNA197 | 69 |
| DDMN24H7SYA197 | 73 |
| DDMN36C4PNK87 | 54 |
| DDMN36C4PYK87 | 58 |
| DDMN36C4SNA197 | 55 |
| DDMN36C4SYA197 | 59 |
| DDMN36H4PNK87 | 68 |
| DDMN36H4PYK87 | 72 |
| DDMN36H4SNA197 | 69 |
| DDMN36H4SYA197 | 73 |
| DDMN43C2PNK87 | 54 |
| DDMN43C2PYK87 | 58 |
| DDMN43C2SNA197 | 55 |
| DDMN43C2SYA197 | 59 |
| DDMN43H2PNK87 | 68 |
| DDMN43H2PYK87 | 72 |
| DDMN43H2SNA197 | 69 |
| DDMN43H2SYA197 | 73 |
| DDMN47C1PNK87 | 54 |
| DDMN47C1PYK87 | 58 |
| DDMN47C1SNA197 | 55 |
| DDMN47C1SYA197 | 59 |
| DDMN47H1PNK87 | 68 |
| DDMN47H1PYK87 | 72 |
| DDMN47H1SNA197 | 69 |
| DDMN47H1SYA197 | 73 |
| DDMN50PNK87 | 6 |
| DDMN50SNA197 | 7 |
| DDMP24C7PJK87 | 46 |
| DDMP24C7SJA197 | 47 |
| DDMP24H7PJK87 | 62 |
| DDMP24H7SJA197 | 63 |
| DDMP36C4PJK87 | 46 |
| DDMP36C4SJA197 | 47 |
| DDMP36H4PJK87 | 62 |
| DDMP36H4SJA197 | 63 |
| DDMP43C2PJK87 | 46 |
| DDMP43C2SJA197 | 47 |
| DDMP43H2PJK87 | 62 |
| DDMP43H2SJA197 | 63 |
| DDMP47C1PJK87 | 46 |
| DDMP47C1SJA197 | 47 |
| DDMP47H1PJK87 | 62 |
| DDMP47H1SJA197 | 63 |
| DDMP50PJK87 | 16 |
| DDMP50SJA197 | 17 |
| DDMV24C7PNK87 | 54 |
| DDMV24C7PYK87 | 58 |
| DDMV24C7SNA197 | 55 |
| DDMV24C7SYA197 | 59 |
| DDMV24H7PNK87 | 68 |
| DDMV24H7PYK87 | 72 |
| DDMV24H7SNA197 | 69 |
| DDMV24H7SYA197 | 73 |
| DDMV36C4PNK87 | 54 |
| DDMV36C4PYK87 | 58 |
| DDMV36C4SNA197 | 55 |
| DDMV36C4SYA197 | 59 |
| DDMV36H4PNK87 | 68 |
| DDMV36H4PYK87 | 72 |
| DDMV36H4SNA197 | 69 |
| DDMV36H4SYA197 | 73 |
| DDMV43C2PNK87 | 54 |
| DDMV43C2PYK87 | 58 |
| DDMV43C2SNA197 | 55 |
| DDMV43C2SYA197 | 59 |
| DDMV43H2PNK87 | 68 |
| DDMV43H2PYK87 | 72 |
| DDMV43H2SNA197 | 69 |
| DDMV43H2SYA197 | 73 |
| DDMV47C1PNK87 | 54 |
| DDMV47C1PYK87 | 58 |
| DDMV47C1SNA197 | 55 |
| DDMV47C1SYA197 | 59 |
| DDMV47H1PNK87 | 68 |
| DDMV47H1PYK87 | 72 |
| DDMV47H1SNA197 | 69 |
| DDMV47H1SYA197 | 73 |
| DDMV50PNK87 | 6 |
| DDMV50SNA197 | 7 |
| DDMY24W7PK87 | 78 |
| DDMY24W7PNM | 188 |
| DDMY24W7SA197 | 79 |
| DDMY24W7SNM | 189 |
| DDMY36W4PK87 | 78 |
| DDMY36W4PNM | 188 |
| DDMY36W4SA197 | 79 |
| DDMY36W4SNM | 189 |
| DDMY43W2PK87 | 78 |
| DDMY43W2PNM | 188 |
| DDMY43W2SA197 | 79 |
| DDMY43W2SNM | 189 |
| DDMY47W1PK87 | 78 |
| DDMY47W1PNM | 188 |
| DDMY47W1SA197 | 79 |
| DDMY47W1SNM | 189 |
| DDMY50P | 140 |
| DDMY50PNM | 180 |
| DDMY50PNM*1AON | 176 |
| DDMY50POL3NM | 172 |
| DDMY50S | 141 |
| DDMY50SNM | 181 |
| DDMY50SNM*1AON | 177 |
| DDMY50SOL3NM | 173 |
| DDMZ24C7PNK87 | 54 |
| DDMZ24C7PYK87 | 58 |
| DDMZ24C7SNA197 | 55 |
| DDMZ24C7SYA197 | 59 |
| DDMZ24H7PNK87 | 68 |
| DDMZ24H7PYK87 | 72 |
| DDMZ24H7SNA197 | 69 |
| DDMZ24H7SYA197 | 73 |
| DDMZ36C4PNK87 | 54 |
| DDMZ36C4PYK87 | 58 |
| DDMZ36C4SNA197 | 55 |
| DDMZ36C4SYA197 | 59 |
| DDMZ36H4PNK87 | 68 |
| DDMZ36H4PYK87 | 72 |
| DDMZ36H4SNA197 | 69 |
| DDMZ36H4SYA197 | 73 |
| DDMZ43C2PNK87 | 54 |
| DDMZ43C2PYK87 | 58 |
| DDMZ43C2SNA197 | 55 |
| DDMZ43C2SYA197 | 59 |
| DDMZ43H2PNK87 | 68 |
| DDMZ43H2PYK87 | 72 |
| DDMZ43H2SNA197 | 69 |
| DDMZ43H2SYA197 | 73 |
| DDMZ47C1PNK87 | 54 |
| DDMZ47C1PYK87 | 58 |
| DDMZ47C1SNA197 | 55 |
| DDMZ47C1SYA197 | 59 |
| DDMZ47H1PNK87 | 68 |
| DDMZ47H1PYK87 | 72 |
| DDMZ47H1SNA197 | 69 |
| DDMZ47H1SYA197 | 73 |
| DDMZ50PNK87 | 6 |
| DDMZ50SNA197 | 7 |
| DDNG50P-P1 | 4 |
| DDNG50S-P1 | 5 |
| DDNGE50P-P1 | 4 |
| DDNGE50S-P1 | 5 |
| DDNGL50P-P1 | 4 |
| DDNGL50S-P1 | 5 |
| DDNGX50P-P1 | 4 |
| DDNGX50S-P1 | 5 |
| DDNGZ50P-P1 | 4 |
| DDNGZ50S-P1 | 5 |
| DDX50P-0L2-K87-146 | 10 |
| DDX50PK87 | 32 |
| DDX50S-0L2-A197-146 | 11 |
| DDX50SA197 | 33 |
| DE-59-20 | 195, 218 |
| DE-60-20 | 195, 218 |
| DE111805-1 | 216 |
| DE111805-5 | 216 |
| DE111813 | 216 |
| DE111813-3 | 216 |
| DE111919 | 215 |
| DE111920 | 214 |
| DE115339 | 207 |
| DE115339-20 | 205 |
| DE115386-101A | 195 |
| DE115386-1B | 207 |
| DE121073-154 | 200 |
| DE121073-54 | 200 |
| DE19977-47 | 193, 195 |
| DE19977-5 | 204 |
| DE24657 | 203 |
| DE24657-16 | 192, 195 |
| DE44994 | 203 |
| DE44994-2 | 192 |
| DE50904-1 | 218 |
| DE51218 | 206 |
| DE51219 | 206 |
| DE51224-1 | 210 |
| DE53750 | 218 |
| DE9P-0L2-K87 | 10 |
| DE9P-1A5N-K87 | 26 |
| DE9P-1A6N-K87 | 26 |
| DE9P-1A7N-K87 | 22 |
| DE9P-1A8N-K87 | 22 |
| DE9P-1A9N-K87 | 22 |
| DE9P-1ADN-K87 | 24 |
| DE9P-1AFN-K87 | 22 |
| DE9P-1AJN-K87 | 24 |
| DE9P-1AON-K87 | 20 |
| DE9P-1ATN-K87 | 26 |
| DE9P-1AUN-K87 | 26 |
| DE9P-1AVN-K87 | 24 |
| DE9P-1AWN-K87 | 24 |
| DE9P-F179A-K87 | 12 |
| DE9PK87 | 32 |
| DE9S-0L2-A197 | 11 |
| DE9S-1A5N-A197 | 27 |
| DE9S-1A6N-A197 | 27 |
| DE9S-1A7N-A197 | 23 |
| DE9S-1A8N-A197 | 23 |
| DE9S-1A9N-A197 | 23 |
| DE9S-1ADN-A197 | 25 |
| DE9S-1AFN-A197 | 23 |
| DE9S-1AJN-A197 | 25 |
| DE9S-1AON-A197 | 21 |
| DE9S-1ATN-A197 | 27 |
| DE9S-1AUN-A197 | 27 |
| DE9S-1AVN-A197 | 25 |
| DE9S-1AWN-A197 | 25 |
| DE9S-F179A-A197 | 13 |
| DE9SA197 | 33 |
| DEA9PK87FO | 36 |
| DEA9SA197FO | 37 |
| DEBS-9 | 205 |
| DEBU111515 | 216 |
| DEE9P-0L2-K87-146 | 10 |
| DEE9PK87 | 32 |
| DEE9S-0L2-A197-146 | 11 |
| DEE9SA197 | 33 |
| DEJK9P*-1A0N | 110 |
| DEJK9P*-1A5N | 118 |
| DEJK9P*-1A6N | 118 |
| DEJK9P*-1A7N | 114 |
| DEJK9P*-1A8N | 114 |
| DEJK9P*-1A9N | 114 |
| DEJK9P*-1ADN | 116 |
| DEJK9P*-1AFN | 114 |
| DEJK9P*-1AGN | 116 |
| DEJK9P*-1AHN | 114 |
| DEJK9P*-1AJN | 116 |
| DEJK9P*-1APN | 118 |
| DEJK9P*-1ATN | 118 |
| DEJK9P*-1AUN | 118 |
| DEJK9P*-1AVN | 116 |
| DEJK9P*-1AWN | 116 |
| DEJK9P*-1U0N | 108 |
| DEJK9P*-1U7N | 112 |
| DEJK9P*-1U7N-146 | 112 |
| DEJK9P*-OL4 | 120 |
| DEJK9S*-1A0N | 111 |
| DEJK9S*-1A5N | 119 |
| DEJK9S*-1A6N | 119 |
| DEJK9S*-1A7N | 115 |
| DEJK9S*-1A8N | 115 |
| DEJK9S*-1A9N | 115 |
| DEJK9S*-1ADN | 117 |
| DEJK9S*-1AFN | 115 |
| DEJK9S*-1AGN | 117 |
| DEJK9S*-1AHN | 115 |
| DEJK9S*-1AJN | 117 |
| DEJK9S*-1APN | 119 |
| DEJK9S*-1ATN | 119 |
| DEJK9S*-1AUN | 119 |
| DEJK9S*-1AVN | 117 |
| DEJK9S*-1AWN | 117 |
| DEJK9S*-1U0N | 109 |
| DEJK9S*-1U7N | 113 |
| DEJK9S*-1U7N-146 | 113 |
| DEJK9S*-OL4 | 121 |
| DEJKE9P*-1A0N | 110 |
| DEJKE9P*-1U0N | 108 |
| DEJKE9P*-OL4 | 120 |
| DEJKE9P*-OL4-146 | 120 |
| DEJKE9S*-1A0N | 111 |
| DEJKE9S*-1U0N | 109 |
| DEJKE9S*-OL4 | 121 |
| DEJKE9S*-OL4-146 | 121 |
| DEJKX9P*-1A0N | 110 |
| DEJKX9P*-OL4 | 120 |
| DEJKX9P*-OL4-146 | 120 |
| DEJKX9S*-1A0N | 111 |
| DEJKX9S*-OL4 | 121 |
| DEJKX9S*-OL4-146 | 121 |
| DEJT9P | 122 |
| DEJT9S* | 123 |
| DEJTE9P | 122 |
| DEJTE9S* | 123 |
| DEJTX9P | 122 |
| DEJTX9S* | 123 |
| DEM-5W1P-1A0N-K87 | 74 |
| DEM-5W1P-1A7N-K87 | 74 |

| Part Number | Page |
|---|---|
| DEM-5W1P-NMB-76 | 195 |
| DEM-5W1P-NMB-77 | 195 |
| DEM-5W1P-NMC-76 | 195 |
| DEM-5W1P-OL2-K87 | 76 |
| DEM-5W1P-OL4-K87 | 76 |
| DEM-5W1S-1A0N-A197 | 75 |
| DEM-5W1S-1A7N-A197 | 75 |
| DEM-5W1S-NMB-77 | 195 |
| DEM-5W1S-NMC-76 | 195 |
| DEM-5W1S-OL2-A197 | 77 |
| DEM-5W1S-OL4-A197 | 77 |
| DEM-9P-NMB-76 | 195 |
| DEM-9S-NMB-76 | 195 |
| DEM-9S-NMC-77 | 195 |
| DEM5W1P1A0NNMBK52 | 195 |
| DEM5W1P1A7NNMBK52 | 195 |
| DEM5W1P1A9NNMBK52 | 195 |
| DEM5W1PF179ANMBK52 | 195 |
| DEM5W1PK87 | 78 |
| DEM5W1PNM | 188 |
| DEM5W1PNMBK52 | 195 |
| DEM5W1POL3NMBK52 | 195 |
| DEM5W1S1A0NNMBK52 | 195 |
| DEM5W1S1A7NNMBK52 | 195 |
| DEM5W1S1A9NNMBK52 | 195 |
| DEM5W1SA197 | 79 |
| DEM5W1SF179ANMBK52 | 195 |
| DEM5W1SNM | 189 |
| DEM5W1SNMBK52 | 195 |
| DEM5W1SOL3NMBK52 | 195 |
| DEM9P | 140 |
| DEM9P1A0NNMBK52 | 195 |
| DEM9P1A7NNMBK52 | 195 |
| DEM9P1A9NNMBK52 | 195 |
| DEM9PA | 132 |
| DEM9PB | 136 |
| DEM9PC | 134 |
| DEM9PD | 132 |
| DEM9PE | 136 |
| DEM9PF | 134 |
| DEM9PF179 | 138 |
| DEM9PF179A | 138 |
| DEM9PF179ANMBK52 | 195 |
| DEM9PG | 132 |
| DEM9PH | 136 |
| DEM9PK | 134 |
| DEM9PL | 132 |
| DEM9PLNM | 174 |
| DEM9PM | 136 |
| DEM9PNM | 180 |
| DEM9PNM*1A7N | 178 |
| DEM9PNM*1A9N | 178 |
| DEM9PNM*1AON | 176 |
| DEM9PNMBK52 | 195 |
| DEM9PNMC76 | 195 |
| DEM9PNMC77 | 195 |
| DEM9POL3NM | 172 |
| DEM9POL3NMBK52 | 195 |
| DEM9PP | 134 |
| DEM9PR | 134 |
| DEM9PS | 132 |
| DEM9PW | 132 |
| DEM9PX | 136 |
| DEM9PZ | 136 |
| DEM9S | 141 |
| DEM9S1A0NNMBK52 | 195 |
| DEM9S1A7NNMBK52 | 195 |
| DEM9S1A9NNMBK52 | 195 |
| DEM9SA | 133 |
| DEM9SB | 137 |
| DEM9SC | 135 |
| DEM9SD | 133 |
| DEM9SE | 137 |
| DEM9SF | 135 |
| DEM9SF179 | 139 |
| DEM9SF179A | 139 |
| DEM9SF179ANMBK52 | 195 |
| DEM9SG | 133 |
| DEM9SH | 137 |
| DEM9SK | 135 |
| DEM9SL | 133 |
| DEM9SLNM | 175 |
| DEM9SM | 137 |
| DEM9SNM | 181 |
| DEM9SNM*1A7N | 179 |
| DEM9SNM*1A9N | 179 |
| DEM9SNM*1AON | 177 |
| DEM9SNMB77 | 195 |
| DEM9SNMBK52 | 195 |
| DEM9SNMC76 | 195 |
| DEM9SOL3NM | 173 |
| DEM9SOL3NMBK52 | 195 |
| DEM9SP | 135 |
| DEM9SR | 135 |
| DEM9SS | 133 |
| DEM9SW | 133 |
| DEM9SX | 137 |
| DEM9SZ | 137 |
| DEMA15PNM | 184 |
| DEMA15PNMBK47FO | 195 |
| DEMA15SNM | 185 |
| DEMA15SNMBK47FO | 195 |
| DEMA25PNMBK47FO | 195 |
| DEMA25SNMBK47FO | 195 |
| DEMA37PNMBK47FO | 195 |
| DEMA37SNMBK47FO | 195 |
| DEMA50PNMBK47FO | 195 |
| DEMA50SNMBK47FO | 195 |
| DEMA9PNM | 182 |
| DEMA9PNMBK47FO | 195 |
| DEMA9PNMBK52 | 195 |
| DEMA9SNM | 183 |
| DEMA9SNMBK47FO | 195 |
| DEMA9SNMBK52 | 195 |
| DEMAK15PNMBK47FO | 195 |
| DEMAK15SNMBK47FO | 195 |
| DEMAK25PNMBK47FO | 195 |
| DEMAK25SNMBK47FO | 195 |
| DEMAK37PNMBK47FO | 195 |
| DEMAK37SNMBK47FO | 195 |
| DEMAK50PNMBK47FO | 195 |
| DEMAK9PNMBK47FO | 195 |
| DEMAK9SNMBK47FO | 195 |
| DEMAY15PNM | 184 |
| DEMAY15SNM | 185 |
| DEMAY9PNM | 182 |
| DEMAY9SNM | 183 |
| DEMB-5W1S-NMB-76 | 195 |
| DEMB-9S-NMC-77 | 195 |
| DEMB9S-NMB-76 | 195 |
| DEMB9S-NMC-76 | 195 |
| DEMB9SNMB77 | 195 |
| DEMC5C1PJK87 | 44 |
| DEMC5C1PVK87 | 50 |
| DEMC5C1SJA197 | 45 |
| DEMC5C1SVA197 | 51 |
| DEMC5H1PJK87 | 60 |
| DEMC5H1SJA197 | 61 |
| DEMC5P1PVK87 | 64 |
| DEMC5P1SVA197 | 65 |
| DEMC9SJA197 | 17 |
| DEMCP9PJK87 | 16 |
| DEMD5C1PJK87 | 44 |
| DEMD5C1PVK87 | 50 |
| DEMD5C1SJA197 | 45 |
| DEMD5C1SVA197 | 51 |
| DEMD5H1PJK87 | 60 |
| DEMD5H1SJA197 | 61 |
| DEMD5P1PVK87 | 64 |
| DEMD5P1SVA197 | 65 |
| DEMD9PJK87 | 16 |
| DEMD9SJA197 | 17 |
| DEME5W1PK87 | 78 |
| DEME5W1SA197 | 79 |
| DEME9P | 140 |
| DEME9S | 141 |
| DEMG5C1PJK87 | 44 |
| DEMG5C1PVK87 | 50 |
| DEMG5C1SJA197 | 45 |
| DEMG5C1SVA197 | 51 |
| DEMG5H1PJK87 | 60 |
| DEMG5H1SJA197 | 61 |
| DEMG5P1PVK87 | 64 |
| DEMG5P1SVA197 | 65 |
| DEMG9PJK87 | 16 |
| DEMG9SJA197 | 17 |
| DEMM5W1P | 166 |
| DEMM5W1S | 167 |
| DEMM9P | 140 |
| DEMM9PA | 132 |
| DEMM9PB | 136 |
| DEMM9PC | 134 |
| DEMM9PD | 132 |
| DEMM9PE | 136 |
| DEMM9PF | 134 |
| DEMM9PF179 | 138 |
| DEMM9PF179A | 138 |
| DEMM9PG | 132 |
| DEMM9PH | 136 |
| DEMM9PK | 134 |
| DEMM9PL | 132 |
| DEMM9PM | 136 |
| DEMM9PP | 134 |
| DEMM9PR | 134 |
| DEMM9PS | 132 |
| DEMM9PW | 132 |
| DEMM9PX | 136 |
| DEMM9PZ | 136 |
| DEMM9S | 141 |
| DEMM9SA | 133 |
| DEMM9SB | 137 |
| DEMM9SC | 135 |
| DEMM9SD | 133 |
| DEMM9SE | 137 |
| DEMM9SF | 135 |
| DEMM9SF179 | 139 |
| DEMM9SF179A | 139 |
| DEMM9SG | 133 |
| DEMM9SH | 137 |
| DEMM9SK | 135 |
| DEMM9SL | 133 |
| DEMM9SM | 137 |
| DEMM9SP | 135 |
| DEMM9SR | 135 |
| DEMM9SS | 133 |
| DEMM9SW | 133 |
| DEMM9SX | 137 |
| DEMM9SZ | 137 |
| DEMMC5C1PJ | 146 |
| DEMMC5C1SJ | 147 |
| DEMMC5H1PJ | 154 |
| DEMMC5H1SJ | 155 |
| DEMMD5C1PJ | 146 |
| DEMMD5C1SJ | 147 |
| DEMMD5H1PJ | 154 |
| DEMMD5H1SJ | 155 |
| DEMME5W1P | 166 |
| DEMME5W1S | 167 |
| DEMME9P | 140 |
| DEMME9S | 141 |
| DEMMG5C1PJ | 146 |
| DEMMG5C1SJ | 147 |
| DEMMG5H1PJ | 154 |
| DEMMG5H1SJ | 155 |
| DEMMN5C1PN | 150 |
| DEMMN5C1SN | 151 |
| DEMMN5H1PN | 158 |
| DEMMN5H1SN | 159 |
| DEMMN5V1PN | 162 |
| DEMMN5V1SN | 163 |
| DEMMP5C1PJ | 146 |
| DEMMP5C1SJ | 147 |
| DEMMP5H1PJ | 154 |
| DEMMP5H1SJ | 155 |
| DEMMV5C1PN | 150 |
| DEMMV5C1SN | 151 |
| DEMMV5H1PN | 158 |
| DEMMV5H1SN | 159 |
| DEMMV5V1PN | 162 |
| DEMMV5V1SN | 163 |
| DEMMY5W1P | 166 |
| DEMMY5W1S | 167 |
| DEMMY9P | 140 |
| DEMMY9S | 141 |
| DEMMZ5C1PN | 150 |
| DEMMZ5C1SN | 151 |
| DEMMZ5H1PN | 158 |
| DEMMZ5H1SN | 159 |
| DEMMZ5V1PN | 162 |
| DEMMZ5V1SN | 163 |
| DEMN5C1PNK87 | 52 |
| DEMN5C1PYK87 | 56 |
| DEMN5C1SNA197 | 53 |
| DEMN5C1SYA197 | 57 |
| DEMN5H1PNK87 | 66 |
| DEMN5H1PYK87 | 70 |
| DEMN5H1SNA197 | 67 |
| DEMN5H1SYA197 | 71 |
| DEMN9PNK87 | 6 |
| DEMN9SNA197 | 7 |
| DEMP5C1PJK87 | 44 |
| DEMP5C1PVK87 | 50 |
| DEMP5C1SJA197 | 45 |
| DEMP5C1SVA197 | 51 |
| DEMP5H1PJK87 | 60 |
| DEMP5H1SJA197 | 61 |
| DEMP5P1PVK87 | 64 |
| DEMP5P1SVA197 | 65 |
| DEMP9PJK87 | 16 |
| DEMP9SJA197 | 17 |
| DEMPPNMB77 | 195 |
| DEMV5C1PNK87 | 52 |
| DEMV5C1PYK87 | 56 |
| DEMV5C1SNA197 | 53 |
| DEMV5C1SYA197 | 57 |
| DEMV5H1PNK87 | 66 |
| DEMV5H1PYK87 | 70 |
| DEMV5H1SNA197 | 67 |
| DEMV5H1SYA197 | 71 |
| DEMV9PNK87 | 6 |
| DEMV9SNA197 | 7 |
| DEMY5W1PK87 | 78 |
| DEMY5W1PNM | 188 |
| DEMY5W1SA197 | 79 |
| DEMY5W1SNM | 189 |
| DEMY9P | 140 |
| DEMY9PNM | 180 |
| DEMY9PNM*1AON | 176 |
| DEMY9POL3NM | 172 |
| DEMY9S | 141 |
| DEMY9SNM | 181 |
| DEMY9SNM*1AON | 177 |
| DEMY9SOL3NM | 173 |
| DEMZ5C1PNK87 | 52 |
| DEMZ5C1PYK87 | 56 |
| DEMZ5C1SNA197 | 53 |
| DEMZ5C1SYA197 | 57 |
| DEMZ5H1PNK87 | 66 |
| DEMZ5H1PYK87 | 70 |
| DEMZ5H1SNA197 | 67 |
| DEMZ5H1SYA197 | 71 |
| DEMZ9PNK87 | 6 |
| DEMZ9SNA197 | 7 |
| DENG9P-P1 | 4 |
| DENG9S-P1 | 5 |
| DENGE9P-P1 | 4 |
| DENGE9S-P1 | 5 |
| DENGL9P-P1 | 4 |
| DENGL9S-P1 | 5 |
| DENGX9P-P1 | 4 |
| DENGX9S-P1 | 5 |
| DENGZ9P-P1 | 4 |
| DENGZ9S-P1 | 5 |
| DEW9P* | 38 |
| DEW9P*G | 38 |
| DEW9S* | 39 |
| DEW9S*G | 39 |
| DEWE9P* | 38 |
| DEWE9P*G | 38 |
| DEWE9S* | 39 |
| DEWE9S*G | 39 |
| DEX9P-0L2-K87-146 | 10 |
| DEX9PK87 | 32 |
| DEX9S-0L2-A197-146 | 11 |
| DEX9SA197 | 33 |
| DM115224-1010A | 191, 195 |
| DM115224-1020A | 191, 195 |
| DM115224-1040A | 191, 195 |
| DM115224-2010A | 191, 195 |
| DM115224-2020A | 191, 195 |
| DM115224-2040A | 191, 195 |
| DM115224-3010 | 191, 195 |

| Part Number | Page |
|---|---|
| DM115224-3010A | 191 |
| DM115224-3020 | 191, 195 |
| DM115224-3020A | 191 |
| DM115224-3040 | 191, 195 |
| DM115224-3040A | 191 |
| DM115224-4010 | 191, 195 |
| DM115224-4010A | 191 |
| DM115224-4020 | 191, 195 |
| DM115224-4020A | 191 |
| DM115224-4040 | 191, 195 |
| DM115224-4040A | 191 |
| DM115740-12 | 195 |
| DM115740-13 | 195 |
| DM115740-19 | 195 |
| DM115740-5036 | 195 |
| DM115740-5046 | 195 |
| DM115740-5047 | 195 |
| DM115741-5032 | 195 |
| DM115741-5048 | 195 |
| DM115741-7 | 195 |
| DM115741-8 | 195 |
| DM115742-13 | 195 |
| DM115742-14 | 195 |
| DM115742-15 | 195 |
| DM115742-5028 | 195 |
| DM115742-5039 | 195 |
| DM115742-5075 | 195 |
| DM115743-20 | 195 |
| DM115743-22 | 195 |
| DM115743-5040 | 195 |
| DM115743-5064 | 195 |
| DM130321-3 | 92 |
| DM130338 | 90 |
| DM130338-1 | 90, 191 |
| DM130338-4 | 90 |
| DM130339 | 90 |
| DM130339-1 | 90, 191 |
| DM130339-4 | 90 |
| DM130340 | 90 |
| DM130340-1 | 90, 191 |
| DM130340-4 | 90 |
| DM130341 | 90 |
| DM130341-1 | 90 |
| DM130341-4 | 90 |
| DM130342 | 90 |
| DM130342-1 | 90 |
| DM130342-4 | 90 |
| DM130343 | 90 |
| DM130343-1 | 90 |
| DM130343-4 | 90 |
| DM130346-2 | 92 |
| DM130352-2 | 92 |
| DM130358-2 | 92 |
| DM13041-1 | 191 |
| DM13042-1 | 191 |
| DM13043-1 | 191 |
| DM51155 | 91 |
| DM51155-12 | 94 |
| DM51155-13 | 94 |
| DM51155-5000 | 91 |
| DM51155-5004 | 91 |
| DM51155-5005 | 195 |
| DM51155-7 | 91, 195 |
| DM51157 | 91 |
| DM51157-13 | 94 |
| DM51157-14 | 94 |
| DM51157-5000 | 91 |
| DM51157-5005 | 91, 195 |
| DM51157-8 | 91, 195 |
| DM53740 | 86 |
| DM53740-1 | 86 |
| DM53740-15 | 86, 195 |
| DM53740-16 | 86, 195 |
| DM53740-17 | 86, 195 |
| DM53740-18 | 86, 195 |
| DM53740-3 | 86 |
| DM53740-35 | 86 |
| DM53740-36 | 190 |
| DM53740-5 | 86 |
| DM53740-5000 | 86 |
| DM53740-5001 | 86 |
| DM53740-5002 | 86 |
| DM53740-5005 | 86 |
| DM53740-5008 | 86 |
| DM53740-5099 | 86 |
| DM53740-5100 | 86 |
| DM53740-5101 | 86 |
| DM53740-5104 | 86 |
| DM53740-5105 | 86 |
| DM53740-5145 | 86 |
| DM53740-5147 | 190 |
| DM53741 | 87 |
| DM53741-1 | 87 |
| DM53741-10 | 87, 195 |
| DM53741-11 | 87, 195 |
| DM53741-12 | 87, 195 |
| DM53741-13 | 87, 195 |
| DM53741-3 | 87 |
| DM53741-4 | 87 |
| DM53741-5000 | 87 |
| DM53741-5001 | 87 |
| DM53741-5003 | 87 |
| DM53741-5004 | 87 |
| DM53741-5059 | 87 |
| DM53741-5060 | 87 |
| DM53741-5062 | 87 |
| DM53741-5063 | 87 |
| DM53742 | 86 |
| DM53742-1 | 86 |
| DM53742-16 | 86, 195 |
| DM53742-17 | 86, 195 |
| DM53742-18 | 86, 195 |
| DM53742-19 | 86, 195 |
| DM53742-3 | 86 |
| DM53742-36 | 86 |
| DM53742-37 | 190 |
| DM53742-5 | 86 |
| DM53742-5000 | 86 |
| DM53742-5001 | 86 |
| DM53742-5002 | 86 |
| DM53742-5004 | 86 |
| DM53742-5006 | 86 |
| DM53742-5085 | 86 |
| DM53742-5086 | 86 |
| DM53742-5089 | 86 |
| DM53742-5091 | 86 |
| DM53742-5092 | 86 |
| DM53742-5126 | 86 |
| DM53742-5127 | 190 |
| DM53743-16 | 87, 195 |
| DM53743-17 | 87, 195 |
| DM53743-18 | 87, 195 |
| DM53743-19 | 87, 195 |
| DM53743-2 | 87 |
| DM53743-3 | 87 |
| DM53743-5 | 87 |
| DM53743-5000 | 87 |
| DM53743-5001 | 87 |
| DM53743-5003 | 87 |
| DM53743-5004 | 87 |
| DM53743-5073 | 87 |
| DM53743-5074 | 87 |
| DM53743-5076 | 87 |
| DM53743-5077 | 87 |
| DM53743-6 | 87 |
| DM53744-1 | 90 |
| DM53744-107 | 93 |
| DM53744-21 | 90, 191 |
| DM53744-24 | 90, 191 |
| DM53744-25 | 90, 191 |
| DM53744-6 | 90 |
| DM53744-62 | 191 |
| DM53744-63 | 191 |
| DM53744-64 | 191 |
| DM53744-7 | 90 |
| DM53744-92 | 93 |
| DM53744-95 | 93 |
| DM53745-1 | 90 |
| DM53745-104 | 93 |
| DM53745-107 | 93 |
| DM53745-120 | 93 |
| DM53745-126 | 95 |
| DM53745-25 | 90, 191 |
| DM53745-27 | 90, 191 |
| DM53745-28 | 90, 191 |
| DM53745-7 | 90 |
| DM53745-70 | 191 |
| DM53745-72 | 191 |
| DM53745-77 | 191 |
| DM53745-8 | 90 |
| M24308/26-1 | 209 |
| M24308/26-2 | 209 |
| M85049/48-1-1 | 203 |
| M85049/48-1-2 | 203 |
| M85049/48-1-3 | 203 |
| M85049/48-1-4 | 203 |
| M85049/48-1-5 | 203 |
| M85049/48-2-1 | 203 |
| M85049/48-2-2 | 203 |
| M85049/48-2-3 | 203 |
| M85049/48-2-4 | 203 |
| M85049/48-2-5 | 203 |
| M85049/48-3-2 | 204 |
| M85049/48-3-3 | 204 |
| M85049/48-3-4 | 204 |
| M85049/48-3-5 | 204 |
| M85049/50-1 | 204 |
| M85049/50-2 | 204 |
| M85049/50-3 | 204 |
| M85049/50-4 | 204 |
| M85049/50-5 | 204 |
| MDSM-15PE-Z10-VR22 | 99 |
| MDSM-15SC-Z11-VS1 | 100 |
| MDSM-18PE-Z10-VR25 | 99 |
| MDSM-25PE-Z10-VR17 | 99 |
| MDSM-25SC-Z11-VS1 | 100 |
| MDSM-30PE-Z10-VR22 | 99 |
| MDSM-9PE-Z10-VR25 | 99 |
| MDSM-9SC-Z11-VS1 | 100 |
| ZDA15P-1AKN-146 | 28 |
| ZDA15P-A191 | 34 |
| ZDA15P-OL2 | 8 |
| ZDA15S-1AKN-146 | 29 |
| ZDA15S-A191 | 35 |
| ZDA15S-OL2 | 9 |
| ZDAE15P-OL2-146 | 8 |
| ZDAE15S-OL2-146 | 9 |
| ZDAL15P-1AKN-146 | 28 |
| ZDAL15S-1AKN-146 | 29 |
| ZDB25P-1AKN-146 | 28 |
| ZDB25P-A191 | 34 |
| ZDB25P-OL2 | 8 |
| ZDB25S-1AKN-146 | 29 |
| ZDB25S-A191 | 35 |
| ZDB25S-OL2 | 9 |
| ZDBE25P-OL2-146 | 8 |
| ZDBE25S-OL2-146 | 9 |
| ZDBL25P-1AKN-146 | 28 |
| ZDBL25S-1AKN-146 | 29 |
| ZDC37P-1AKN-146 | 28 |
| ZDC37P-A191 | 34 |
| ZDC37P-OL2 | 8 |
| ZDC37S-1AKN-146 | 29 |
| ZDC37S-A191 | 35 |
| ZDC37S-OL2 | 9 |
| ZDCE37P-OL2-146 | 8 |
| ZDCE37S-OL2-146 | 9 |
| ZDCL37P-1AKN-146 | 28 |
| ZDCL37S-1AKN-146 | 29 |
| ZDD50P-A191 | 34 |
| ZDD50P-OL2 | 8 |
| ZDD50S-A191 | 35 |
| ZDD50S-OL2 | 9 |
| ZDDE50P-OL2-146 | 8 |
| ZDDE50S-OL2-146 | 9 |
| ZDE9P-1AKN-146 | 28 |
| ZDE9P-A191 | 34 |
| ZDE9P-OL2 | 8 |
| ZDE9S-1AKN-146 | 29 |
| ZDE9S-A191 | 35 |
| ZDE9S-OL2 | 9 |
| ZDEE9P-OL2-146 | 8 |
| ZDEE9S-OL2-146 | 9 |
| ZDEL9P-1AKN-146 | 28 |
| ZDEL9S-1AKN-146 | 29 |
| ZEDA15PBA | 18 |
| ZEDA15SBA | 19 |
| ZEDAL15PBA | 18 |
| ZEDAL15SBA | 19 |
| ZEDB25PBA | 18 |
| ZEDB25SBA | 19 |
| ZEDBL25PBA | 18 |
| ZEDBL25SBA | 19 |
| ZEDC37PBA | 18 |
| ZEDC37SBA | 19 |
| ZEDCL37PBA | 18 |
| ZEDCL37SBA | 19 |
| ZEDE9PBA | 18 |
| ZEDE9SBA | 19 |
| ZEDEL9PBA | 18 |
| ZEDEL9SBA | 19 |






Dimensions are shown in mm (inch)
Dimensions subject to change

# Product Safety Information

THIS NOTE MUST BE READ IN CONJUNCTION WITH THE PRODUCT DATA SHEET/CATALOG. FAILURE TO OBSERVE THE ADVICE IN THIS INFORMATION SHEET AND THE OPERATING CONDITIONS SPECIFIED IN THE PRODUCT DATA SHEET/CATALOG COULD RESULT IN HAZARDOUS SITUATIONS.

1 MATERIAL CONTENT AND PHYSICAL FORM
Electrical connectors do not usually contain hazardous materials. They contain conducting and non-conducting materials and can be divided into two groups.
a) Printed circuit types and low cost audio types which employ all plastic insulators and casings.
b) Rugged, Fire Barrier and High Reliability types with metal casings and either natural rubber, synthetic rubber, plastic or glass insulating materials. Contact materials vary with type of connector and also application and are usually manufactured from either: Copper, copper alloys, nickel, alumel, chromel or steel. In special applications, other alloys may be specified.

2 FIRE CHARACTERISTICS AND ELECTRIC SHOCK HAZARD
There is no fire hazard when the connector is correctly wired and used within the specified parameters. Incorrect wiring or assembly of the connector or careless use of metal tools or conductive fluids, or transit damage to any of the component parts may cause electric shock or burns. Live circuits must not be broken by separating mated connectors as this may cause arcing, ionisation and burning. Heat dissipation is greater at maximum resistance in a circuit. Hot spots may occur when resistance is raised locally by damage, e.g. cracked or deformed contacts, broken strands of wire. Local overheating may also result from the use of the incorrect application tools or from poor quality soldering or slack screw terminals. Overheating may occur if the ratings in the product Data Sheet/Catalog are exceeded and can cause breakdown of insulation and hence electric shock.
If heating is allowed to continue it intensifies by further increasing the local resistance through loss of temper of spring contacts, formation of oxide film on contacts and wires and leakage currents through carbonisation of insulation and tracking paths. Fire can then result in the presence of combustible materials and this may release noxious fumes. Overheating may not be visually apparent. Burns may result from touching overheated components.

3 HANDLING
Care must be taken to avoid damage to any component parts of electrical connectors during installation and use. Although there are normally no sharp edges, care must be taken when handling certain components to avoid injury to fingers.
Electrical connectors may be damaged in transit to the customers, and damage may result in creation of hazards. Products should therefore be examined prior to installation/use and rejected if found to be damaged.

4 DISPOSAL
Incineration of certain materials may release noxious or even toxic fumes.

5 APPLICATION
Connectors with exposed contacts should not be selected for use on the current supply side of an electrical circuit, because an electric shock could result from touching exposed contacts on an unmated connector. Voltages in excess of 30 V ac or 42.5 V dc are potentially hazardous and care should be taken to ensure that such voltages cannot be transmitted in any way to exposed metal parts of the connector body. The connector and wiring should be checked, before making live, to have no damage to metal parts or insulators, no solder blobs, loose strands, conducting lubricants, swarf, or any other undesired conducting particles. Circuit resistance and continuity check should be made to make certain that there are no high resistance joints or spurious conducting paths. Always use the correct application tools as specified in the Data Sheet/Catalog.
Do not permit untrained personnel to wire, assemble or tamper with connectors. For operation voltage please see appropriate national regulations.

IMPORTANT GENERAL INFORMATION
(i) Air and creepage paths/Operating voltage
The admissible operating voltages depend on the individual applications and the valid national and other applicable safety regulations.
For this reason the air and creepage path data are only reference values. Observe reduction of air and creepage paths due to PC board and/or harnessing.

(ii) Temperature
All information given are temperature limits. The operation temperature depends on the individual application.

(iii) Other important information
ITT Cannon continuously endeavours to improve their products. Therefore, ITT Cannon products may deviate from the description, technical data and shape as shown in this catalog and data sheets.

ITT Cannon manufactures the highest quality products available in the marketplace; however these products are intended to be used in accordance with the specifications in this publication. Any use or application that deviates from the stated operating specifications is not recommended and may be unsafe. No information and data contained in this publication shall be construed to create any liability on the part of ITT Cannon. Any new issue of this publication shall automatically invalidate and supersede any and all previous issues. A limited warranty applies to ITT Cannon products. Except for obligations assumed by ITT Cannon under this warranty, ITT Cannon shall not be liable for any loss, damage, cost of repairs, incidental or consequential damages of any kind, whether or not based on express or implied warranty, contract, negligence or strict liability arising in connection with the design, manufacture, sale, use or repair of the products. Product availability, prices and delivery dates are exclusively subject to our respective order confirmation form; the same applies to orders based on development samples delivered. This publication is not to be construed as an offer. It is intended merely as an invitation to make an offer. By this publication, ITT Cannon does not assume responsibility or any liability for any patent infringements or other rights of third parties which may result from its use. Reprinting this publication is generally permitted, indicating the source. However, ITT Cannon's prior consent must be obtained in all cases.

W E ’ R E  P A R T  O F  Y O U R  W O R L D

I N  I N T E R C O N N E C T  T E C H N O L O G Y

*We are focused on your world with Innovation, Experience, Reliability & Responsiveness.*

*Don't blink.*

*No industry in the world moves faster than electronics. Take a snapshot of it today, and it all changes by tomorrow.*

*When you need to bring your products to market more quickly, you most likely seek a partner who moves just as fast as you do. A company at the forefront with the latest in products and service.*

At ITT Cannon, we have made it our business to understand your world. Or should we say, the many parts of your world:

- The places in the world where you do business.
- The products you bring to the world.
- The service you require from suppliers to compete in the world.

At ITT Cannon, we are proud of a heritage that helped pioneer the electronics industry from its infancy in the early part of this century, to the highly advanced technologies of the present.

Today, we serve nearly every industry in which the increased demand for reliable and innovative interconnect systems is critical:

- Computers (Personal computers, portables and peripherals)
- Telecommunications (Network systems and services/LAN; mobile)
- Transportation (Automobiles, heavy-duty vehicles, rail and mass transit)
- Military/Aerospace (Commercial and military aircraft, defense and space)
- Industrial (Factory automation and instrumentation)
- Medical (Diagnostic equipment)
- Broadcasting
- Consumer Products

As ITT Cannon begins our ninth decade in business, we are proud to provide our global and regional customers with the most reliable electronic products and services available:

- Interconnects and cable assemblies
- RF connectors
- Switches and conductive rubber switchpads
- Test accessories
- I/O card, memory card and smart card interconnects
- Local area network components (copper and fiber optic)
- Turn-key network systems and services
- Customer use tooling

## I N N O V A T I O N

*A commitment to concurrent engineering helps you reach your markets faster*

Let us bring our spirit of innovation to your world. Experienced engineering teams located throughout the globe work hand-in-hand with our customers. And since these teams are thoroughly networked together, you benefit from 24 hour-a-day concurrent engineering capability. These teams advance your project from initial product concepts to final design and into production.

Our teams are experts in computer-based design, modeling and analysis to assure robust product designs. We are also well-versed in performance simulation, as well as verification of mechanical and electrical properties. ITT Cannon utilizes Pro/ENGINEER* software which allows us to develop products and manufacturing processes concurrently, and to easily evaluate multiple design alternatives. This means better designed products, produced faster and at a lower cost.

ITT Cannon's Integrated Product Development process (IPD) allows us to minimize cycle time for first article and volume production.

*A trademark of Parametric Technology Corp.

## E X P E R I E N C E

*Worldwide capacity to meet all of your delivery requirements*

Our decades of manufacturing experience, help us bring the latest products to your world. With automated manufacturing capacity strategically located in North America, Europe and Asia, we can produce products in either large or small quantities to quickly meet your exact requirements.

ITT Cannon is able to modify existing products to suit special customer requirements. With global manufacturing capacity in every continent, we are also able to source product from the location that best suits your needs. This means we have the flexibility to select the most advantageous shipping methods and other logistical options.

ITT Cannon has established Centers of Excellence for world class capabilities such as: Machining, stamping, surface plating, molding, cable assembly and network systems technology — all utilizing the most advanced CAM equipment.

## R E L I A B I L I T Y

*We don't stop at ''world class quality'' — Continuous improvement is our standard*

Our goal is to bring world class electronics to your world. This commitment to perfection has helped ITT Cannon's global facilities earn ISO 9000 certification. We have invested in world class process controls for both assembly and component manufacturing.

ITT Cannon has also met or exceeded the quality system requirements from all customers who have conducted audits. We participate in ship-to-stock programs with many of these customers worldwide and have received numerous quality and preferred supplier awards from customers throughout the world in each of the industries we serve.

## R E S P O N S I V E N E S S

*A singular focus on responding to your needs*

We know that to be responsive, we must know your world inside and out: your particular company, your industry and your challenges. Each of ITT Cannon's thousands of employees worldwide is focused on responding to you with timely and dependable information — and on ensuring that we keep the commitments we make. For instance, our globally linked computer system tracks the status of your order anywhere in the world.

You also benefit from our field applications and sales network, which provides industry-specific knowledge to help you design in the best product for your application.

Our distribution network is one of the most extensive in the industry, and can provide you off-the-shelf product to meet the most challenging delivery requirements.

## A N I N V I T A T I O N T O S H A R E Y O U R W O R L D

*Innovation. Experience. Reliability. Responsiveness.*

At ITT Cannon, these are the strengths that we bring to our customers each and every day. Just as we have for nearly nine decades. We pride ourselves on a level of service and manufacturing know-how that has enabled us to lead our industry. Exceeding your expectations — not just meeting them — is how we approach every project.

With the world moving faster all the time, ITT Cannon is a partner who can help you get your products to market not just on time, but ahead of the competition.

At ITT Cannon, we realize that each customer we serve has their own special needs and expectations. That is why we would welcome the opportunity to discuss your project, your company, your industry — yes, your world.

"ITT" and "Cannon" are registered trademarks of ITT Inc. Specification and other data are based on information available at the time of printing, and are subject to change without notice.

Our facility is not currently certified by the DLA and this product is not covered by the QPL/QML.

Компания «ЭлектроПласт» предлагает заключение долгосрочных отношений при поставках импортных электронных компонентов на взаимовыгодных условиях!

Наши преимущества:

- Оперативные поставки широкого спектра электронных компонентов отечественного и импортного производства напрямую от производителей и с крупнейших мировых складов;
- Поставка более 17-ти миллионов наименований электронных компонентов;
- Поставка сложных, дефицитных, либо снятых с производства позиций;
- Оперативные сроки поставки под заказ (от 5 рабочих дней);
- Экспресс доставка в любую точку России;
- Техническая поддержка проекта, помощь в подборе аналогов, поставка прототипов;
- Система менеджмента качества сертифицирована по Международному стандарту ISO 9001;
- Лицензия ФСБ на осуществление работ с использованием сведений, составляющих государственную тайну;
- Поставка специализированных компонентов (Xilinx, Altera, Analog Devices, Intersil, Interpoint, Microsemi, Aeroflex, Peregrine, Syfer, Eurofarad, Texas Instrument, Miteq, Cobham, E2V, MA-COM, Hittite, Mini-Circuits,General Dynamics и др.);

Помимо этого, одним из направлений компании «ЭлектроПласт» является направление «Источники питания». Мы предлагаем Вам помощь Конструкторского отдела:

- Подбор оптимального решения, техническое обоснование при выборе компонента;
- Подбор аналогов;
- Консультации по применению компонента;
- Поставка образцов и прототипов;
- Техническая поддержка проекта;
- Защита от снятия компонента с производства.

**Как с нами связаться**

**Телефон:** 8 (812) 309 58 32 (многоканальный)
**Факс:** 8 (812) 320-02-42
**Электронная почта:** org@eplast1.ru
**Адрес:** 198099, г. Санкт-Петербург, ул. Калинина, дом 2, корпус 4, литера А.