MCP3221

Low Power 12-Bit A/D Converter With I²C™ Interface

Features

- 12-bit resolution
- ±1 LSB DNL, ±2 LSB INL max.
- 250 µA max conversion current
- 5 nA typical standby current, 1 µA max.
- I²C™-compatible serial interface
  - 100 kHz I²C Standard Mode
  - 400 kHz I²C Fast Mode
- Up to 8 devices on a single 2-Wire bus
- 22.3 ksps in I²C Fast Mode
- Single-ended analog input channel
- On-chip sample and hold
- On-chip conversion clock
- Single-supply specified operation: 2.7V to 5.5V
- Temperature range:
  - Industrial: -40°C to +85°C
  - Extended: -40°C to +125°C
- Small SOT-23-5 package

Applications

- Data Logging
- Multi-zone Monitoring
- Hand-Held Portable Applications
- Battery-Powered Test Equipment
- Remote or Isolated Data Acquisition

Package Type

5-Pin SOT-23

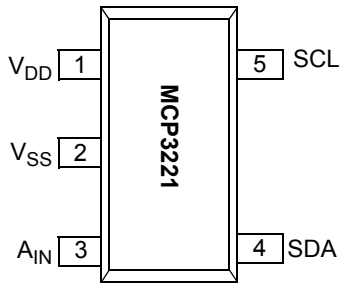

Description

The Microchip Technology Inc. MCP3221 is a successive approximation A/D converter with 12-bit resolution. Available in the SOT-23-5 package, this device provides one single-ended input with very low power consumption. Based on an advanced CMOS technology, the MCP3221 provides a low maximum conversion current and standby current of 250 µA and 1 µA, respectively. Low current consumption, combined with the small SOT-23 package, make this device ideal for battery-powered and remote data acquisition applications.

Communication to the MCP3221 is performed using a 2-wire, I²C compatible interface. Standard (100 kHz) and Fast (400 kHz) I²C modes are available with the device. An on-chip conversion clock enables independent timing for the I²C and conversion clocks. The device is also addressable, allowing up to eight devices on a single 2-wire bus.

The MCP3221 runs on a single supply voltage that operates over a broad range of 2.7V to 5.5V. This device also provides excellent linearity of ±1 LSB differential non-linearity and ±2 LSB integral non-linearity, maximum.

Functional Block Diagram

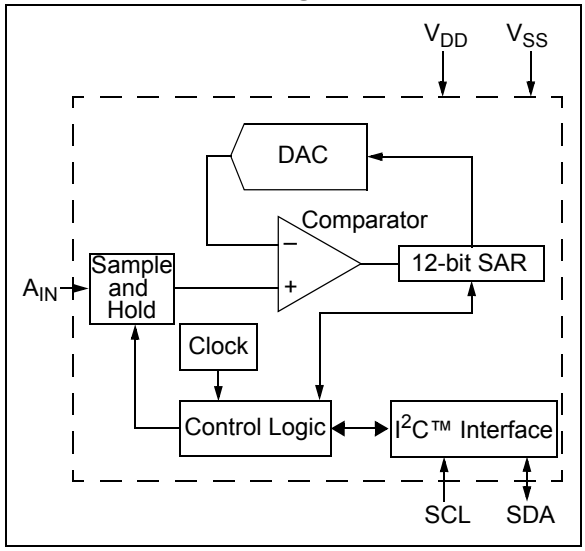

© 2006 Microchip Technology Inc.

1.0 ELECTRICAL CHARACTERISTICS

Absolute Maximum Ratings †

V_{DD}.....7.0V
Analog input pin w.r.t. V_{SS}..... ..... -0.6V to V_{DD} +0.6V
SDA and SCL pins w.r.t. V_{SS}..... .....-0.6V to V_{DD} +1.0V
Storage temperature .....-65°C to +150°C
Ambient temp. with power applied .....-65°C to +125°C
Maximum Junction Temperature.....150°C
ESD protection on all pins (HBM) .....≥ 4 kV

† Stresses above those listed under “Maximum ratings” may cause permanent damage to the device. This is a stress rating only and functional operation of the device at those or any other conditions above those indicated in the operational listings of this specification is not implied. Exposure to maximum rating conditions for extended periods may affect device reliability.

DC ELECTRICAL SPECIFICATIONS

Electrical Characteristics: Unless otherwise noted, all parameters apply at V_{DD} = 5.0V, V_{SS} = GND, R_{PU} = 2 kΩ T_{AMB} = -40°C to +85°C, I^2C Fast Mode Timing: f_{SCL} = 400 kHz (**Note 3**).

Parameters	Sym	Min	Typ	Max	Units	Conditions
DC Accuracy						
Resolution			12		bits	
Integral Nonlinearity	INL	—	±0.75	±2	LSB	
Differential Nonlinearity	DNL	—	±0.5	±1	LSB	No missing codes
Offset Error		—	±0.75	±2	LSB	
Gain Error		—	-1	±3	LSB	
Dynamic Performance						
Total Harmonic Distortion	THD	—	-82	—	dB	V_{IN} = 0.1V to 4.9V @ 1 kHz
Signal-to-Noise and Distortion	SINAD	—	72	—	dB	V_{IN} = 0.1V to 4.9V @ 1 kHz
Spurious-Free Dynamic Range	SFDR	—	86	—	dB	V_{IN} = 0.1V to 4.9V @ 1 kHz
Analog Input						
Input Voltage Range		V_{SS}-0.3	—	V_{DD}+0.3	V	2.7V ≤ V_{DD} ≤ 5.5V
Leakage Current		-1	—	+1	µA	
SDA/SCL (open-drain output):						
Data Coding Format			Straight Binary			
High-level input voltage	V_{IH}	0.7 V_{DD}	—	—	V	
Low-level input voltage	V_{IL}	—	—	0.3 V_{DD}	V	
Low-level output voltage	V_{OL}	—	—	0.4	V	I_{OL} = 3 mA, R_{PU} = 1.53 kΩ
Hysteresis of Schmitt trigger inputs	V_{HYST}	—	0.05 V_{DD}	—	V	f_{SCL} = 400 kHz only
Input leakage current	I_{LI}	-1	—	+1	µA	V_{IN} = 0.1 V_{DD} and 0.9 V_{DD}
Output leakage current	I_{LO}	-1	—	+1	µA	V_{OUT} = 0.1 V_{SS} and 0.9 V_{DD}
Pin capacitance (all inputs/outputs)	C_{IN}, C_{OUT}	—	—	10	pF	T_{AMB} = 25°C, f = 1 MHz; (**Note 2**)
Bus Capacitance	C_B	—	—	400	pF	SDA drive low, 0.4V

Note 1: “Sample time” is the time between conversions once the address byte has been sent to the converter. Refer to Figure 5-6.
2: This parameter is periodically sampled and not 100% tested.
3: R_{PU} = Pull-up resistor on SDA and SCL.
4: SDA and SCL = V_{SS} to V_{DD} at 400 kHz.
5: t_{ACQ} and t_{CONV} are dependent on internal oscillator timing. See Figure 5-5 and Figure 5-6 for relation to SCL.

© 2006 Microchip Technology Inc.

DC ELECTRICAL SPECIFICATIONS (CONTINUED)

Electrical Characteristics: Unless otherwise noted, all parameters apply at V_{DD} = 5.0V, V_{SS} = GND, R_{PU} = 2 kΩ T_{AMB} = -40°C to +85°C, I^2C Fast Mode Timing: f_{SCL} = 400 kHz (**Note 3**).

Parameters	Sym	Min	Typ	Max	Units	Conditions
Power Requirements						
Operating Voltage	V_{DD}	2.7	—	5.5	V	
Conversion Current	I_{DD}	—	175	250	µA	
Standby Current	I_{DDS}	—	0.005	1	µA	SDA, SCL = V_{DD}
Active bus current	I_{DDA}	—	—	120	µA	**Note 4**
Conversion Rate						
Conversion Time	t_{CONV}	—	8.96	—	µs	**Note 5**
Analog Input Acquisition Time	t_{ACQ}	—	1.12	—	µs	**Note 5**
Sample Rate	f_{SAMP}	—	—	22.3	ksps	f_{SCL} = 400 kHz (**Note 1**)

Note 1: "Sample time" is the time between conversions once the address byte has been sent to the converter. Refer to Figure 5-6.

2: This parameter is periodically sampled and not 100% tested.

3: R_{PU} = Pull-up resistor on SDA and SCL.

4: SDA and SCL = V_{SS} to V_{DD} at 400 kHz.

5: t_{ACQ} and t_{CONV} are dependent on internal oscillator timing. See Figure 5-5 and Figure 5-6 for relation to SCL.

TEMPERATURE SPECIFICATIONS

Electrical Characteristics: Unless otherwise noted, all parameters apply at V_{DD} = 5.0V, V_{SS} = GND.

Parameters	Symbol	Min	Typ	Max	Units	Conditions
Temperature Ranges						
Industrial Temperature Range	T_A	-40	—	+85	°C	
Extended Temperature Range	T_A	-40	—	+125	°C	
Operating Temperature Range	T_A	-40	—	+125	°C	
Storage Temperature Range	T_A	-65	—	+150	°C	
Thermal Package Resistances						
Thermal Resistance, 5L-SOT23	θ_{JA}	—	256	—	°C/W	

TIMING SPECIFICATIONS

Electrical Characteristics: All parameters apply at V_{DD} = 2.7V - 5.5V, V_{SS} = GND, T_{AMB} = -40°C to +85°C.						
Parameters	**Sym**	**Min**	**Typ**	**Max**	**Units**	**Conditions**
I²C Standard Mode						
Clock frequency	f_{SCL}	0	—	100	kHz	
Clock high time	T_{HIGH}	4000	—	—	ns	
Clock low time	T_{LOW}	4700	—	—	ns	
SDA and SCL rise time	T_R	—	—	1000	ns	From V_{IL} to V_{IH} (**Note 1**)
SDA and SCL fall time	T_F	—	—	300	ns	From V_{IL} to V_{IH} (**Note 1**)
START condition hold time	$T_{HD:STA}$	4000	—	—	ns	
START condition setup time	$T_{SU:STA}$	4700	—	—	ns	
Data input setup time	$T_{SU:DAT}$	250	—	—	ns	
STOP condition setup time	$T_{SU:STO}$	4000	—	—	ns	
STOP condition hold time	$T_{HD:STD}$	4000	—	—	ns	
Output valid from clock	T_{AA}	—	—	3500	ns	
Bus free time	T_{BUF}	4700	—	—	ns	**Note 2**
Input filter spike suppression	T_{SP}	—	—	50	ns	SDA and SCL pins (**Note 1**)
I²C Fast Mode						
Clock frequency	F_{SCL}	0	—	400	kHz	
Clock high time	T_{HIGH}	600	—	—	ns	
Clock low time	T_{LOW}	1300	—	—	ns	
SDA and SCL rise time	T_R	20 + 0.1C_B	—	300	ns	From V_{IL} to V_{IH} **(Note 1)**
SDA and SCL fall time	T_F	20 + 0.1C_B	—	300	ns	From V_{IL} to V_{IH} **(Note 1)**
START condition hold time	$T_{HD:STA}$	600	—	—	ns	
START condition setup time	$T_{SU:STA}$	600	—	—	ns	
Data input hold time	$T_{HD:DAT}$	0	—	0.9	ms	
Data input setup time	$T_{SU:DAT}$	100	—	—	ns	
STOP condition setup time	$T_{SU:STO}$	600	—	—	ns	
STOP condition hold time	$T_{HD:STD}$	600	—	—	ns	
Output valid from clock	T_{AA}	—	—	900	ns	
Bus free time	T_{BUF}	1300	—	—	ns	**Note 2**
Input filter spike suppression	T_{SP}	—	—	50	ns	SDA and SCL pins **(Note 1)**

Note 1: This parameter is periodically sampled and not 100% tested.
2: Time the bus must be free before a new transmission can start.

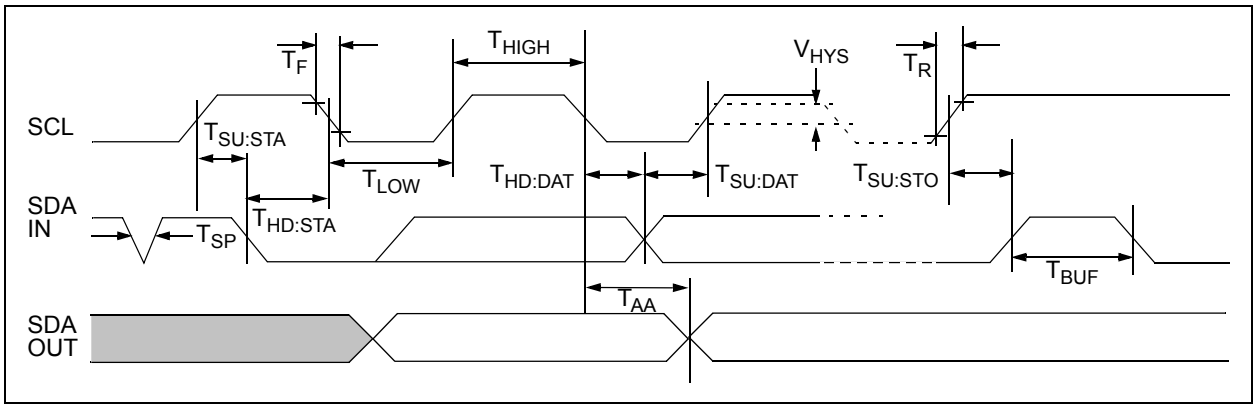

FIGURE 1-1: *Standard and Fast Mode Bus Timing Data.*

© 2006 Microchip Technology Inc.

2.0 TYPICAL PERFORMANCE CURVES

Note:	The graphs and tables provided following this note are a statistical summary based on a limited number of samples and are provided for informational purposes only. The performance characteristics listed herein are not tested or guaranteed. In some graphs or tables, the data presented may be outside the specified operating range (e.g., outside specified power supply range) and therefore outside the warranted range.

Note: Unless otherwise indicated, V_{DD} = 5V, V_{SS} = 0V, I^2C Fast Mode Timing (SCL = 400 kHz), Continuous Conversion Mode (f_{SAMP} = 22.3 ksps), T_A = +25°C.

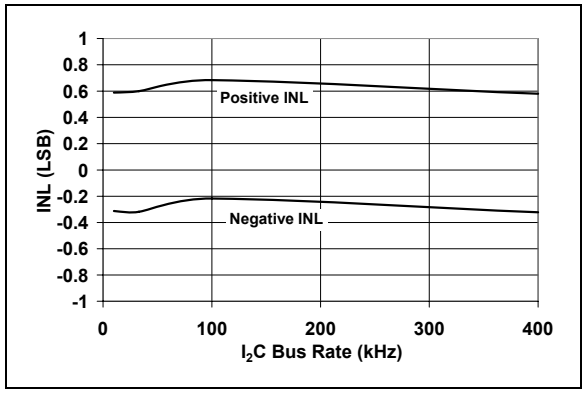

FIGURE 2-1: *INL vs. Clock Rate.*

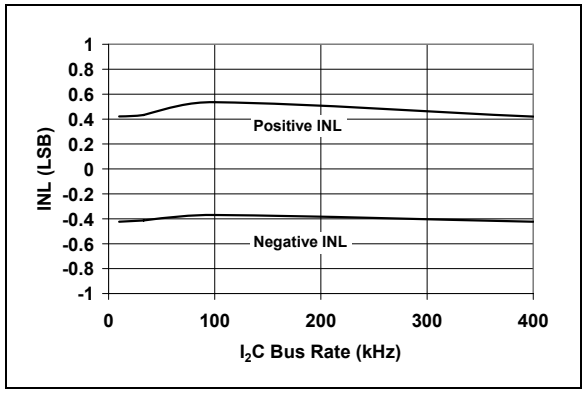

FIGURE 2-4: *INL vs. Clock Rate (V_{DD} = 2.7V).*

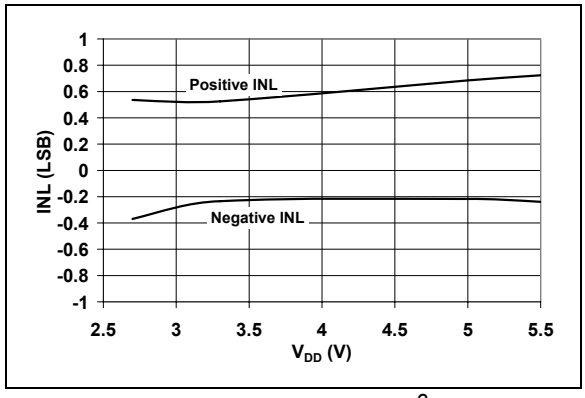

FIGURE 2-2: *INL vs. V_{DD} - I^2C™ Standard Mode (f_{SCL} = 100 kHz).*

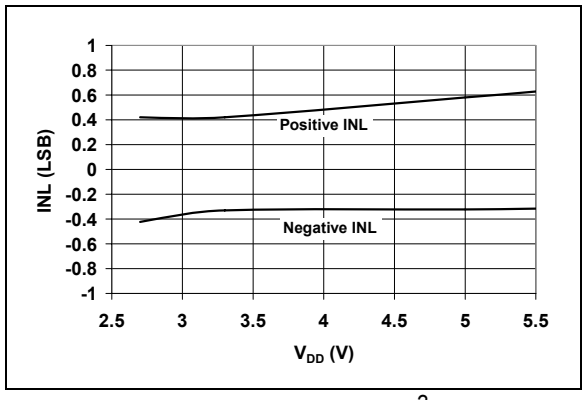

FIGURE 2-5: *INL vs. V_{DD} - I^2C™ Fast Mode (f_{SCL} = 400 kHz).*

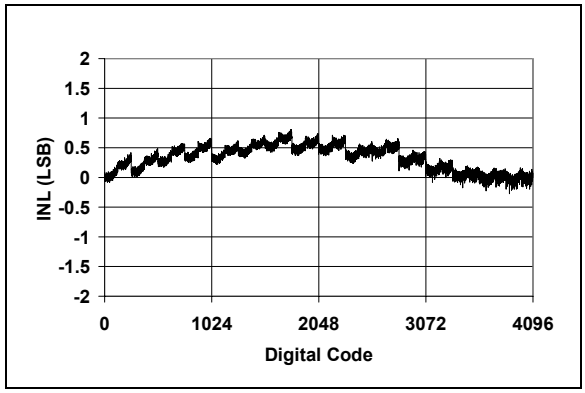

FIGURE 2-3: *INL vs. Code (Representative Part).*

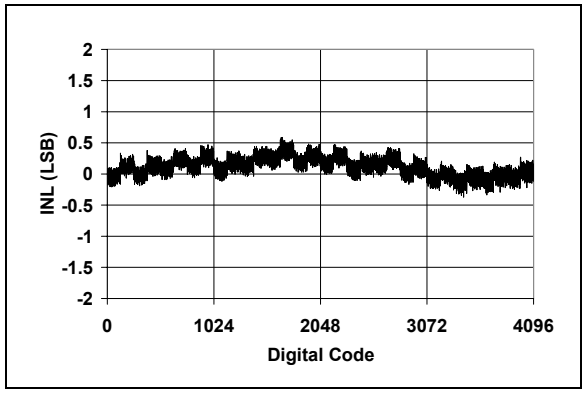

FIGURE 2-6: *INL vs. Code (Representative Part, V_{DD} = 2.7V).*

Note: Unless otherwise indicated, V_{DD} = 5V, V_{SS} = 0V, I^2C Fast Mode Timing (SCL = 400 kHz), Continuous Conversion Mode (f_{SAMP} = 22.3 ksps), T_A = +25°C.

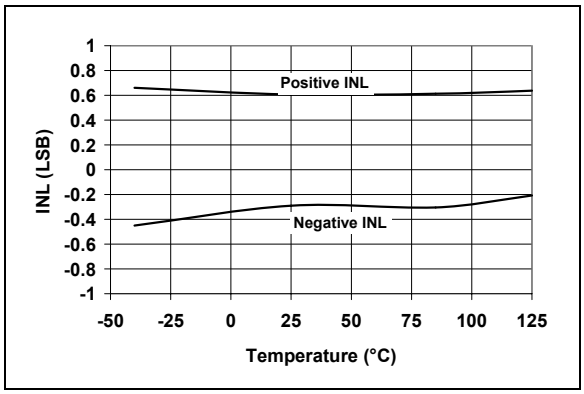

FIGURE 2-7: *INL vs. Temperature.*

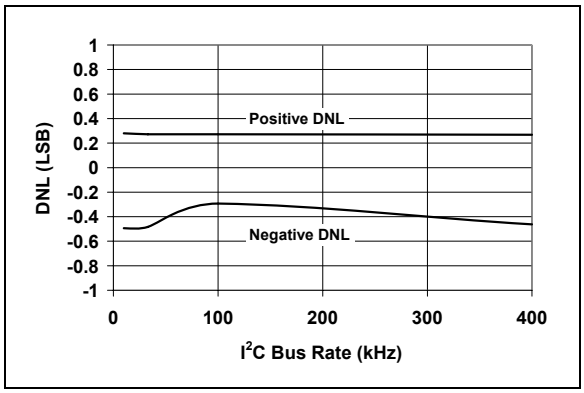

FIGURE 2-8: *DNL vs. Clock Rate.*

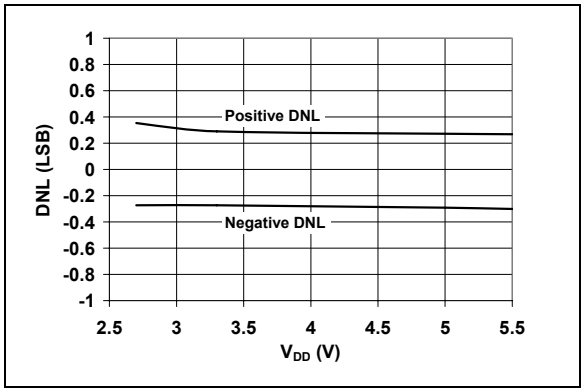

FIGURE 2-9: *DNL vs. V_{DD} - I^2C™ Standard Mode (f_{SCL} = 100 kHz).*

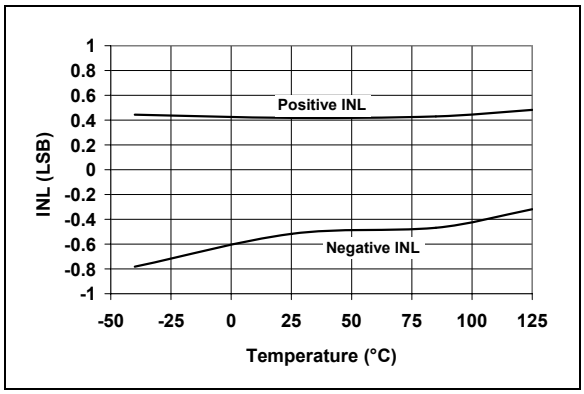

FIGURE 2-10: *INL vs. Temperature (V_{DD} = 2.7V).*

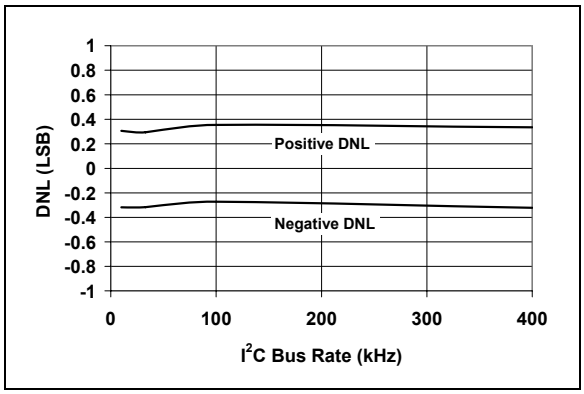

FIGURE 2-11: *DNL vs. Clock Rate (V_{DD} = 2.7V).*

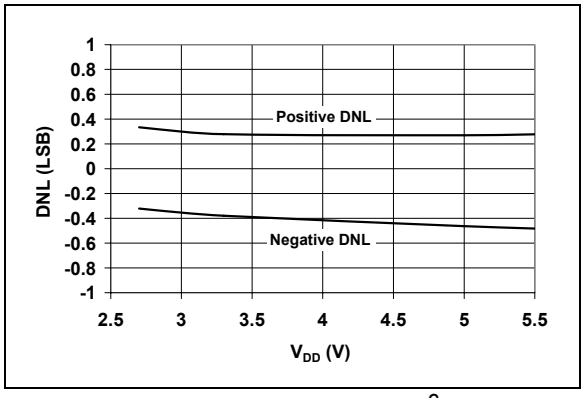

FIGURE 2-12: *DNL vs. V_{DD} - I^2C™ Fast Mode (f_{SCL} = 400 kHz).*

© 2006 Microchip Technology Inc.

Note: Unless otherwise indicated, V_{DD} = 5V, V_{SS} = 0V, I^2C Fast Mode Timing (SCL = 400 kHz), Continuous Conversion Mode (f_{SAMP} = 22.3 ksps), T_A = +25°C.

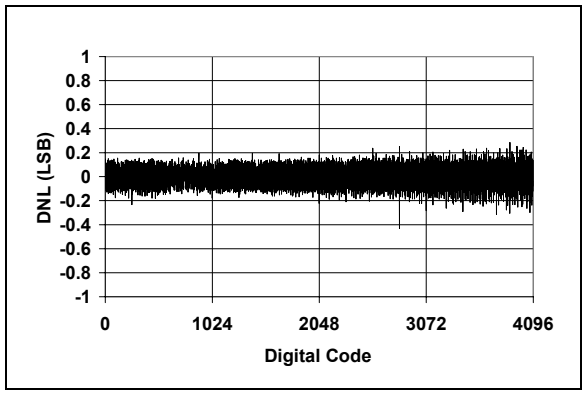

FIGURE 2-13: *DNL vs. Code (Representative Part).*

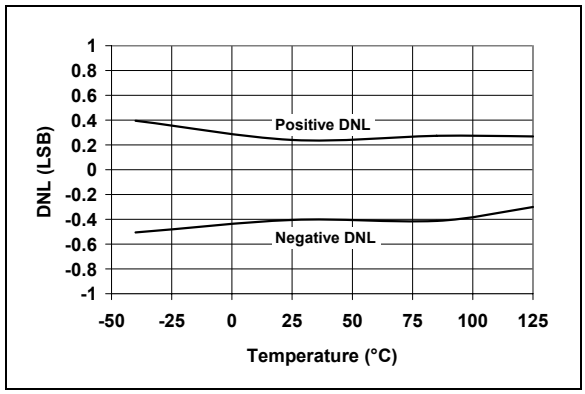

FIGURE 2-14: *DNL vs. Temperature.*

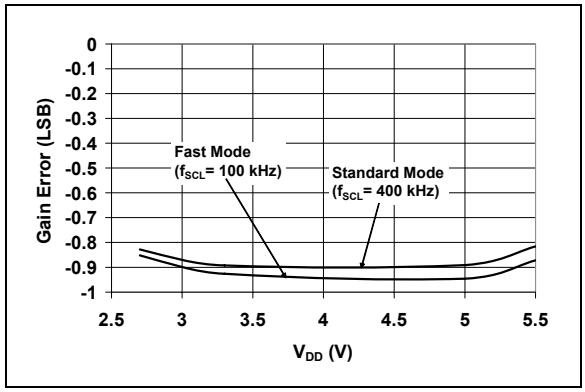

FIGURE 2-15: *Gain Error vs. V_{DD}.*

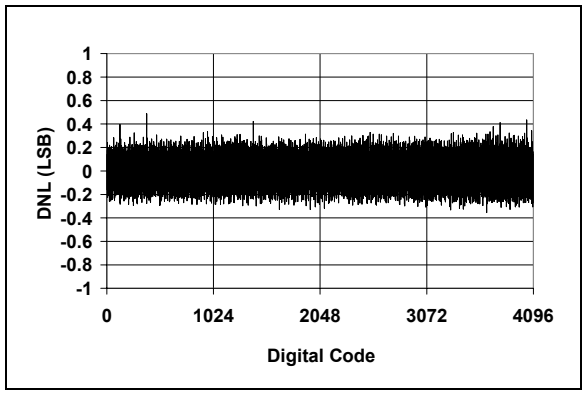

FIGURE 2-16: *DNL vs. Code (Representative Part, V_{DD} = 2.7V).*

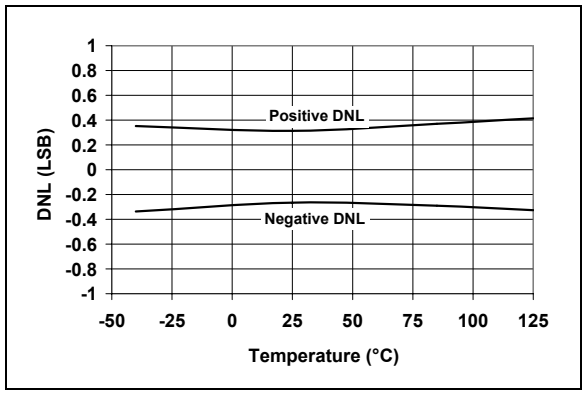

FIGURE 2-17: *DNL vs. Temperature (V_{DD} = 2.7V).*

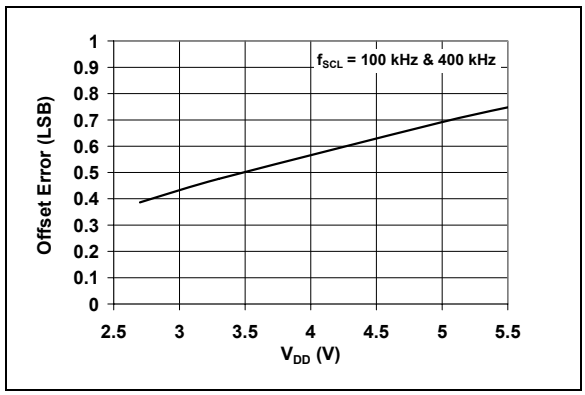

FIGURE 2-18: *Offset Error vs. V_{DD}.*

Note: Unless otherwise indicated, V_{DD} = 5V, V_{SS} = 0V, I^2C Fast Mode Timing (SCL = 400 kHz), Continuous Conversion Mode (f_{SAMP} = 22.3 ksps), T_A = +25°C.

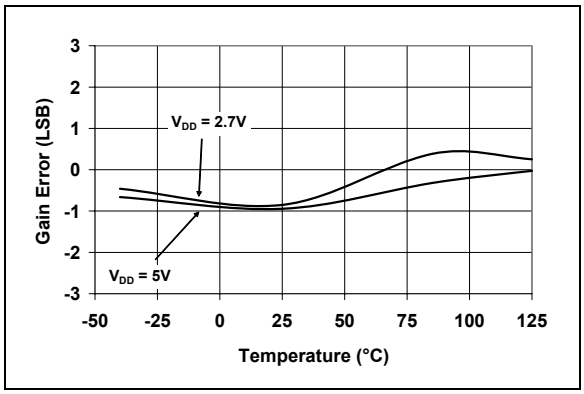

FIGURE 2-19: *Gain Error vs. Temperature.*

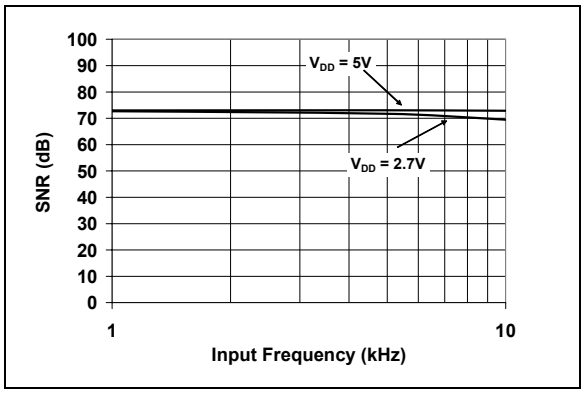

FIGURE 2-20: *SNR vs. Input Frequency.*

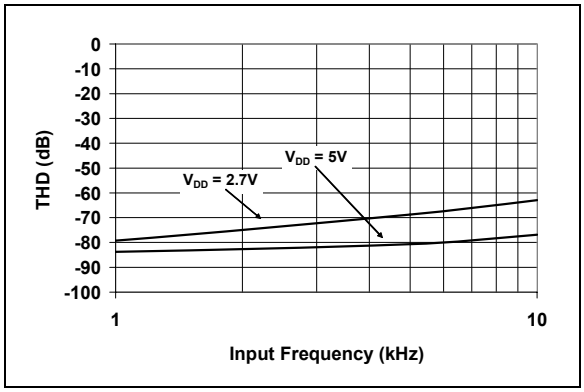

FIGURE 2-21: *THD vs. Input Frequency.*

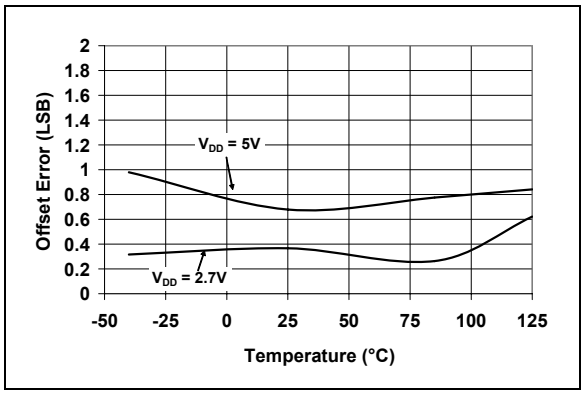

FIGURE 2-22: *Offset Error vs. Temperature.*

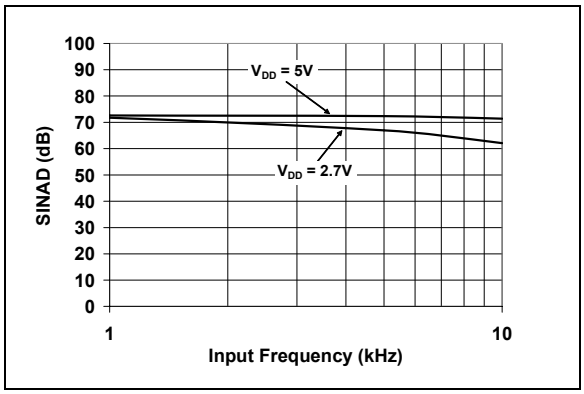

FIGURE 2-23: *SINAD vs. Input Frequency.*

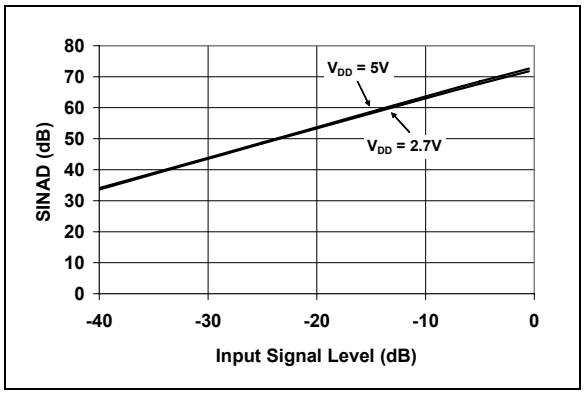

FIGURE 2-24: *SINAD vs. Input Signal Level.*

© 2006 Microchip Technology Inc.

Note: Unless otherwise indicated, V_{DD} = 5V, V_{SS} = 0V, I^2C Fast Mode Timing (SCL = 400 kHz), Continuous Conversion Mode (f_{SAMP} = 22.3 ksps), T_A = +25°C.

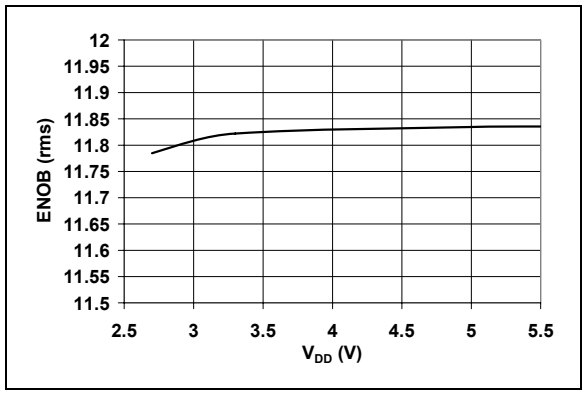

FIGURE 2-25: *ENOB vs. V_{DD}.*

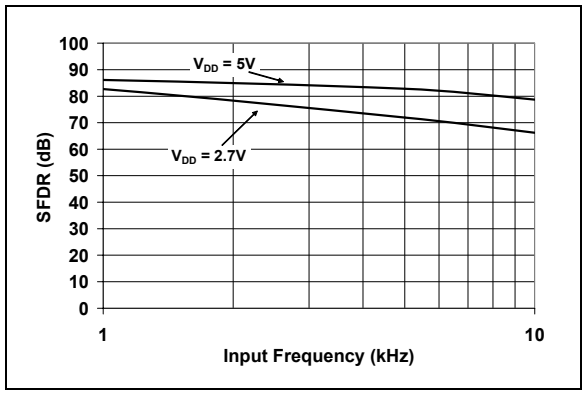

FIGURE 2-26: *SFDR vs. Input Frequency.*

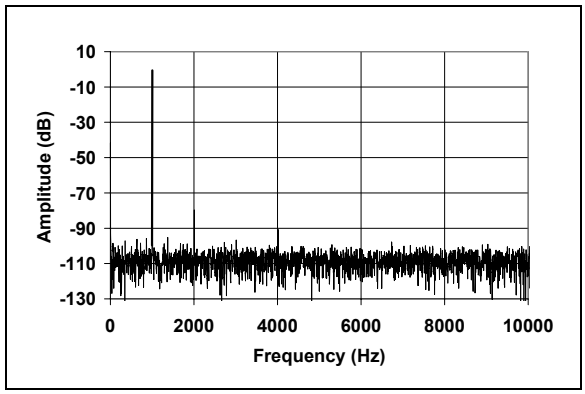

FIGURE 2-27: *Spectrum Using I^2C™ Fast Mode (Representative Part, 1 kHz Input Frequency).*

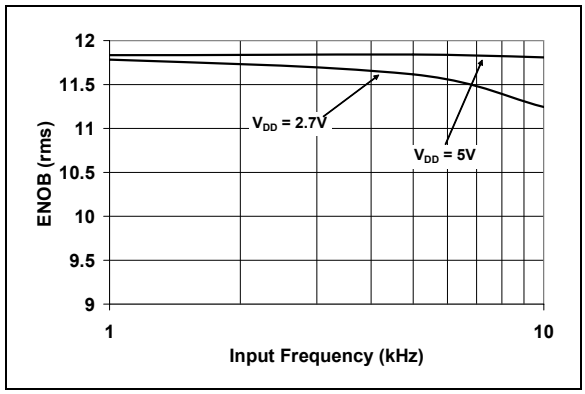

FIGURE 2-28: *ENOB vs. Input Frequency.*

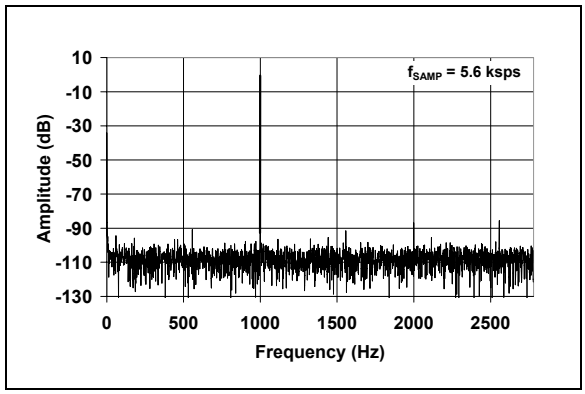

FIGURE 2-29: *Spectrum Using I^2C™ Standard Mode (Representative Part, 1 kHz Input Frequency).*

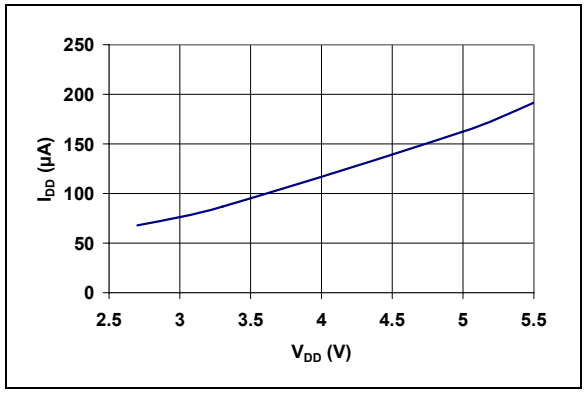

FIGURE 2-30: *I_{DD} (Conversion) vs. V_{DD}.*

Note: Unless otherwise indicated, V_{DD} = 5V, V_{SS} = 0V, I^2C Fast Mode Timing (SCL = 400 kHz), Continuous Conversion Mode (f_{SAMP} = 22.3 ksps), T_A = +25°C.

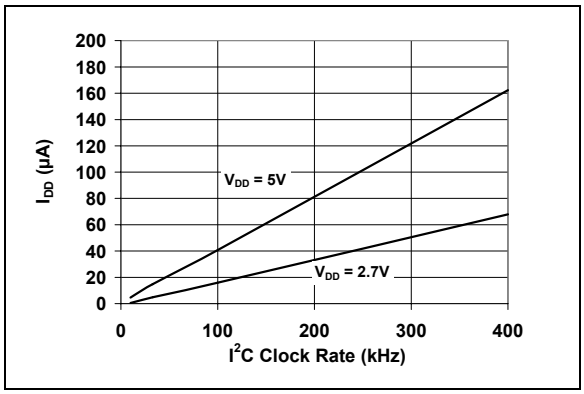

FIGURE 2-31: *I_{DD} (Conversion) vs. Clock Rate.*

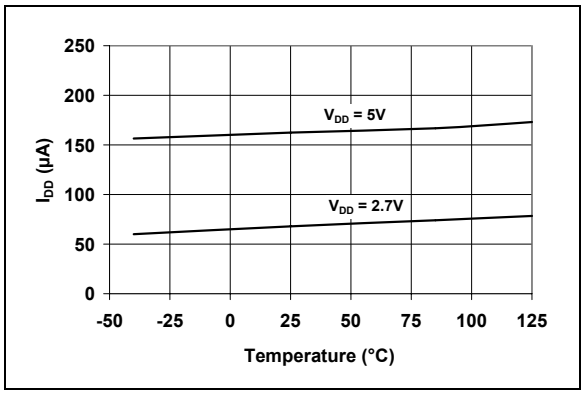

FIGURE 2-32: *I_{DD} (Conversion) vs. Temperature.*

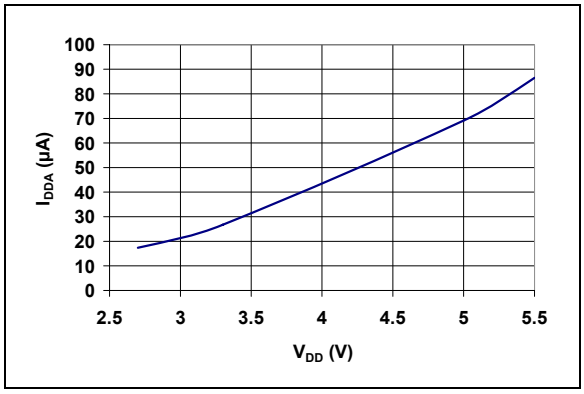

FIGURE 2-33: *I_{DDA} (Active Bus) vs. V_{DD}.*

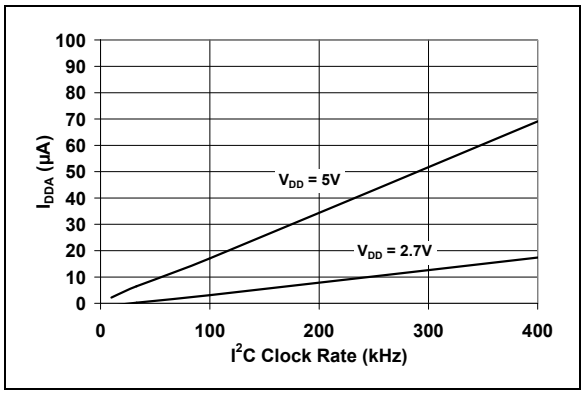

FIGURE 2-34: *I_{DDA} (Active Bus) vs. Clock Rate.*

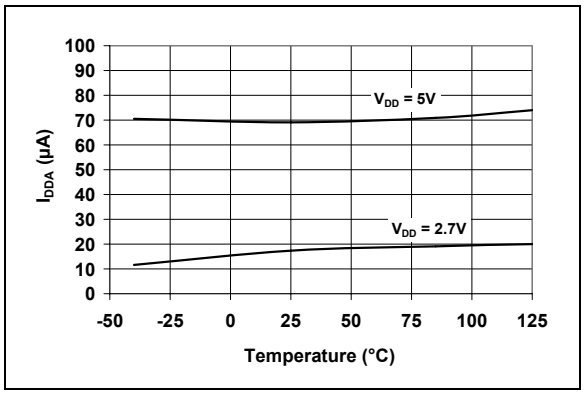

FIGURE 2-35: *I_{DDA} (Active Bus) vs. Temperature.*

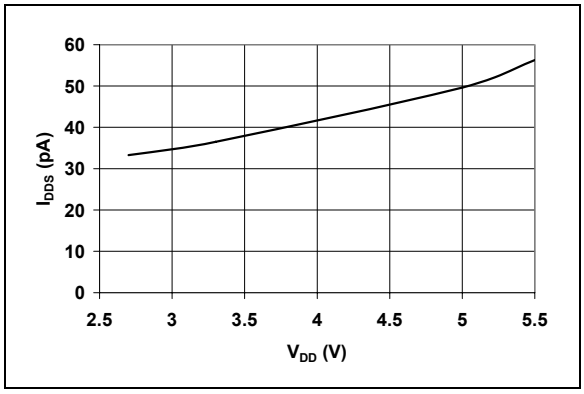

FIGURE 2-36: *I_{DDS} (Standby) vs. V_{DD}.*

© 2006 Microchip Technology Inc.

Note: Unless otherwise indicated, V_{DD} = 5V, V_{SS} = 0V, I^2C Fast Mode Timing (SCL = 400 kHz), Continuous Conversion Mode (f_{SAMP} = 22.3 ksps), T_A = +25°C.

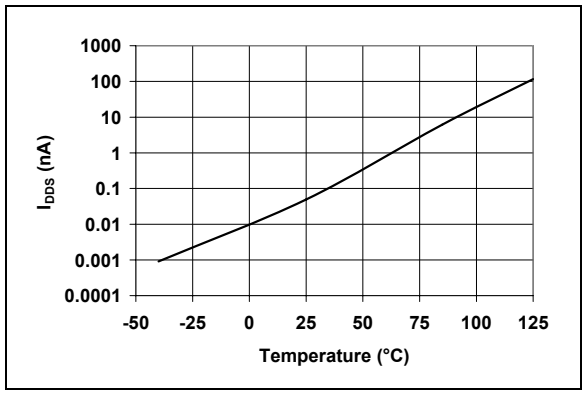

FIGURE 2-37: *I_{DDS} (Standby) vs. Temperature.*

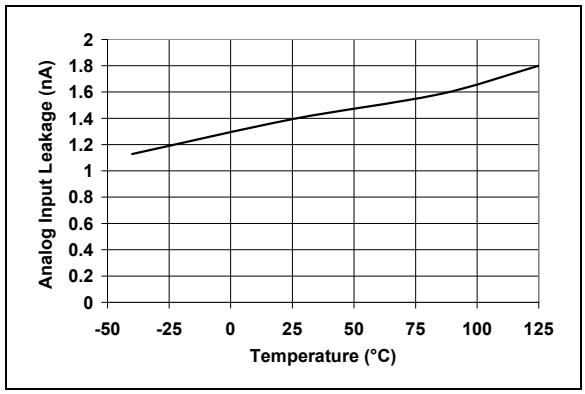

FIGURE 2-38: *Analog Input Leakage vs. Temperature.*

2.1 Test Circuits

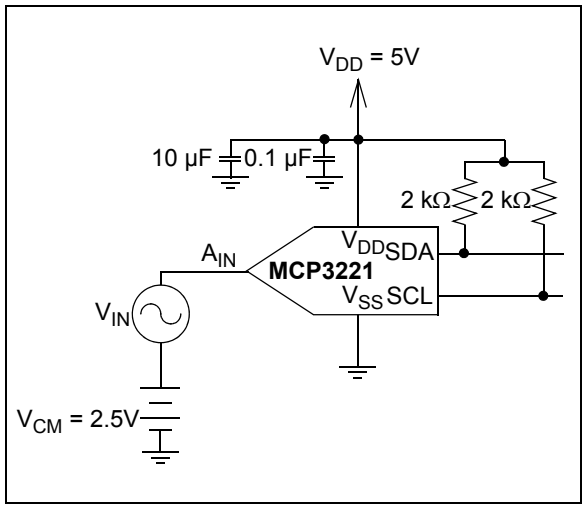

FIGURE 2-39: *Typical Test Configuration.*

3.0 PIN FUNCTIONS

TABLE 3-1: PIN FUNCTION TABLE

Name	Function
V_{DD}	+2.7V to 5.5V Power Supply
V_{SS}	Ground
A_{IN}	Analog Input
SDA	Serial Data In/Out
SCL	Serial Clock In

3.1 V_{DD} and V_{SS}

The V_{DD} pin, with respect to V_{SS}, provides power to the device as well as a voltage reference for the conversion process. Refer to **Section 6.4 "Device Power and Layout Considerations"**, "Device Power and Layout Considerations", for tips on power and grounding.

3.2 Analog Input (A_{IN})

AIN is the input pin to the sample-and-hold circuitry of the Successive Approximation Register (SAR) converter. Care should be taken in driving this pin. Refer to **Section 6.1 "Driving the Analog Input"**, "Driving the Analog Input". For proper conversions, the voltage on this pin can vary from V_{SS} to V_{DD}.

3.3 Serial Data (SDA)

SDA is a bidirectional pin used to transfer addresses and data into and out of the device. Since it is an open-drain terminal, the SDA bus requires a pull-up resistor to V_{DD} (typically 10 kΩ for 100 kHz and 2 kΩ for 400 kHz SCL clock speeds). Refer to **Section 6.2 "Connecting to the I^2C Bus"**, "Connecting to the I^2C Bus", for more information.

For normal data transfer, SDA is allowed to change only during SCL low. Changes during SCL high are reserved for indicating the START and STOP conditions. Refer to **Section 5.1 "I^2C Bus Characteristics"**, "I^2C Bus Characteristics".

3.4 Serial Clock (SCL)

SCL is an input pin used to synchronize the data transfer to and from the device on the SDA pin and is an open-drain terminal. Therefore, the SCL bus requires a pull-up resistor to V_{DD} (typically 10 kΩ for 100 kHz and 2 kΩ for 400 kHz SCL clock speeds. Refer to **Section 6.2 "Connecting to the I^2C Bus"**, "Connecting to the I^2C Bus").

For normal data transfer, SDA is allowed to change only during SCL low. Changes during SCL high are reserved for indicating the START and STOP conditions. Refer to **Section 6.1 "Driving the Analog Input"**, "Driving the Analog Input".

© 2006 Microchip Technology Inc.

4.0 DEVICE OPERATION

The MCP3221 employs a classic SAR architecture. This architecture uses an internal sample and hold capacitor to store the analog input while the conversion is taking place. At the end of the acquisition time, the input switch of the converter opens and the device uses the collected charge on the internal sample-and-hold capacitor to produce a serial 12-bit digital output code. The acquisition time and conversion is self-timed using an internal clock. After each conversion, the results are stored in a 12-bit register that can be read at any time.

Communication with the device is accomplished with a 2-wire, I^2C interface. Maximum sample rates of 22.3 ksps are possible with the MCP3221 in a continuous-conversion mode and an SCL clock rate of 400 kHz.

4.1 Digital Output Code

The digital output code produced by the MCP3221 is a function of the input signal and power supply voltage, V_{DD}. As the V_{DD} level is reduced, the LSB size is reduced accordingly. The theoretical LSB size is shown below.

EQUATION

$$LSB\ SIZE = \frac{V_{DD}}{4096}$$

V_{DD} = Supply voltage

The output code of the MCP3221 is transmitted serially with MSB first. The format of the code is straight binary.

4.2 Conversion Time (t_{CONV})

The conversion time is the time required to obtain the digital result once the analog input is disconnected from the holding capacitor. With the MCP3221, the specified conversion time is typically 8.96 µs. This time is dependent on the internal oscillator and is independent of SCL.

4.3 Acquisition Time (t_{ACQ})

The acquisition time is the amount of time the sample cap array is acquiring charge.

The acquisition time is, typically, 1.12 µs. This time is dependent on the internal oscillator and independent of SCL.

4.4 Sample Rate

Sample rate is the inverse of the maximum amount of time that is required from the point of acquisition of the first conversion to the point of acquisition of the second conversion.

The sample rate can be measured either by single or continuous conversions. A single conversion includes a Start Bit, Address Byte, Two Data Bytes and a Stop bit. This sample rate is measured from one Start Bit to the next Start Bit.

For continuous conversions (requested by the Master by issuing an acknowledge after a conversion), the maximum sample rate is measured from conversion to conversion or a total of 18 clocks (two data bytes and two Acknowledge bits). Refer to **Section 5.2 "Device Addressing"**, "Device Addressing".

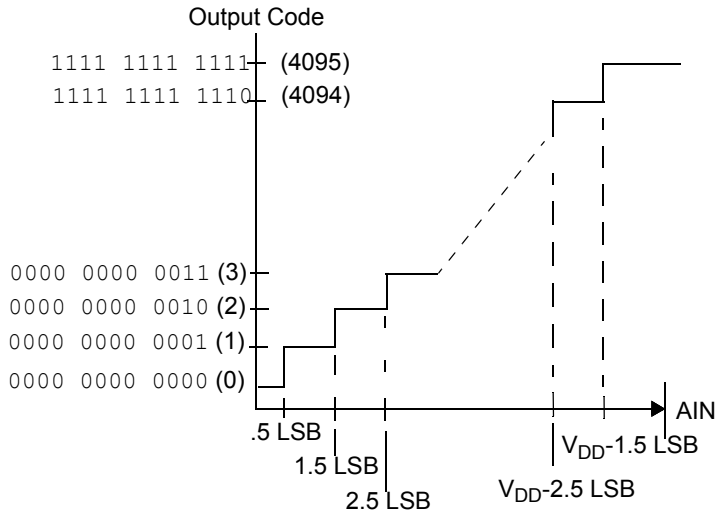

FIGURE 4-1: *Transfer Function.*

4.5 Differential Non-Linearity (DNL)

In the ideal A/D converter transfer function, each code has a uniform width. That is, the difference in analog input voltage is constant from one code transition point to the next. Differential nonlinearity (DNL) specifies the deviation of any code in the transfer function from an ideal code width of 1 LSB. The DNL is determined by subtracting the locations of successive code transition points after compensating for any gain and offset errors. A positive DNL implies that a code is longer than the ideal code width, while a negative DNL implies that a code is shorter than the ideal width.

4.6 Integral Non-Linearity (INL)

Integral nonlinearity (INL) is a result of cumulative DNL errors and specifies how much the overall transfer function deviates from a linear response. The method of measurement used in the MCP3221 A/D converter to determine INL is the “end-point” method.

4.7 Offset Error

Offset error is defined as a deviation of the code transition points that are present across all output codes. This has the effect of shifting the entire A/D transfer function. The offset error is measured by finding the difference between the actual location of the first code transition and the desired location of the first transition. The ideal location of the first code transition is located at 1/2 LSB above V_{SS}.

4.8 Gain Error

The gain error determines the amount of deviation from the ideal slope of the A/D converter transfer function. Before the gain error is determined, the offset error is measured and subtracted from the conversion result. The gain error can then be determined by finding the location of the last code transition and comparing that location to the ideal location. The ideal location of the last code transition is 1.5 LSBs below full-scale or V_{DD}.

4.9 Conversion Current (I_{DD})

The average amount of current over the time required to perform a 12-bit conversion.

4.10 Active Bus Current (I_{DDA})

The average amount of current over the time required to monitor the I^2C bus. Any current the device consumes while it is not being addressed is referred to as “Active Bus” current.

4.11 Standby Current (I_{DDS})

The average amount of current required while no conversion is occurring and while no data is being output (i.e., SCL and SDA lines are quiet).

4.12 I^2C Standard Mode Timing

I^2C specification where the frequency of SCL is 100 kHz.

4.13 I^2C Fast Mode Timing

I^2C specification where the frequency of SCL is 400 kHz.

© 2006 Microchip Technology Inc.

5.0 SERIAL COMMUNICATIONS

5.1 I²C Bus Characteristics

The following bus protocol has been defined:

- Data transfer may be initiated only when the bus is not busy.
- During data transfer, the data line must remain stable whenever the clock line is high. Changes in the data line while the clock line is high will be interpreted as a START or STOP condition.

Accordingly, the following bus conditions have been defined (refer to Figure 5-1).

5.1.1 BUS NOT BUSY (A)

Both data and clock lines remain high.

5.1.2 START DATA TRANSFER (B)

A high-to-low transition of the SDA line while the clock (SCL) is high determines a START condition. All commands must be preceded by a START condition.

5.1.3 STOP DATA TRANSFER (C)

A low-to-high transition of the SDA line while the clock (SCL) is high determines a STOP condition. All operations must be ended with a STOP condition.

5.1.4 DATA VALID (D)

The state of the data line represents valid data when, after a START condition, the data line is stable for the duration of the clock signal's high period.

The data on the line must be changed during the low period of the clock signal. There is one clock pulse per bit of data.

Each data transfer is initiated with a START condition and terminated with a STOP condition. The number of data bytes transferred between the START and STOP conditions is determined by the master device and is unlimited.

5.1.5 ACKNOWLEDGE

Each receiving device, when addressed, is obliged to generate an acknowledge bit after the reception of each byte. The master device must generate an extra clock pulse which is associated with this acknowledge bit.

The device that acknowledges has to pull down the SDA line during the acknowledge clock pulse in such a way that the SDA line is stable-low during the high period of the acknowledge-related clock pulse. Setup and hold times must be taken into account. During reads, a master device must signal an end of data to the slave by not generating an acknowledge bit on the last byte that has been clocked out of the slave (NAK). In this case, the slave (MCP3221) will release the bus to allow the master device to generate the STOP condition.

The MCP3221 supports a bidirectional, 2-wire bus and data transmission protocol. The device that sends data onto the bus is the transmitter and the device receiving data is the receiver. The bus has to be controlled by a master device which generates the serial clock (SCL), controls the bus access and generates the START and STOP conditions, while the MCP3221 works as a slave device. Both master and slave devices can operate as either transmitter or receiver, but the master device determines which mode is activated.

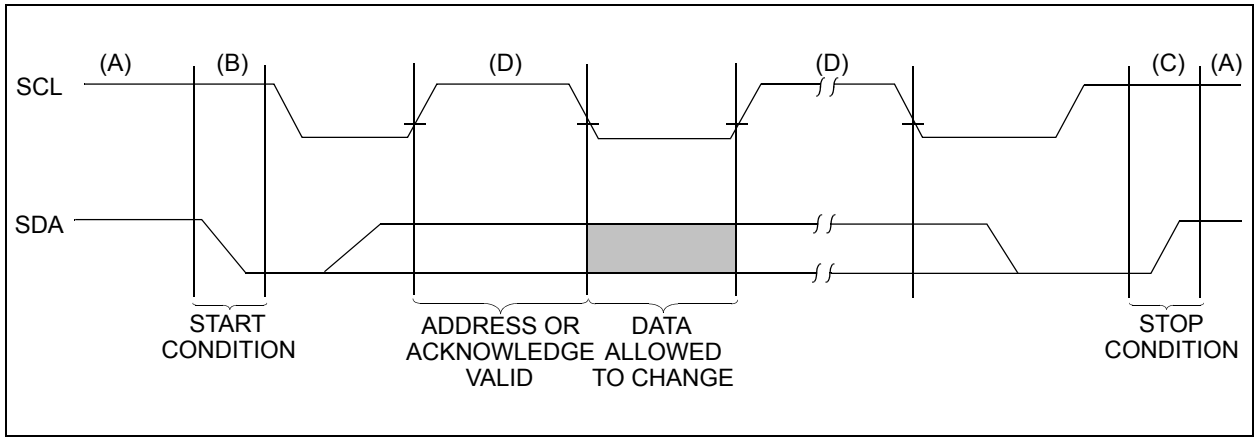

FIGURE 5-1: *Data Transfer Sequence on the Serial Bus.*

5.2 Device Addressing

The address byte is the first byte received following the START condition from the master device. The first part of the control byte consists of a 4-bit device code, which is set to `1001` for the MCP3221. The device code is followed by three address bits: A2, A1 and A0. The default address bits are `101`. Contact the Microchip factory for additional address bit options. The address bits allow up to eight MCP3221 devices on the same bus and are used to determine which device is accessed.

The eighth bit of the slave address determines if the master device wants to read conversion data or write to the MCP3221. When set to a '`1`', a read operation is selected. When set to a '`0`', a write operation is selected. There are no writable registers on the MCP3221. Therefore, this bit must be set to a '`1`' in order to initiate a conversion.

The MCP3221 is a slave device that is compatible with the I^2C 2-wire serial interface protocol. A hardware connection diagram is shown in Figure 6-2. Communication is initiated by the microcontroller (master device), which sends a START bit followed by the address byte.

On completion of the conversion(s) performed by the MCP3221, the microcontroller must send a STOP bit to end communication.

The last bit in the device address byte is the R/$\overline{W}$ bit. When this bit is a logic '`1`', a conversion will be executed. Setting this bit to logic '`0`' will also result in an "acknowledge" (ACK) from the MCP3221, with the device then releasing the bus. This can be used for device polling. Refer to **Section 6.3 "Device Polling"**, "Device Polling", for more information.

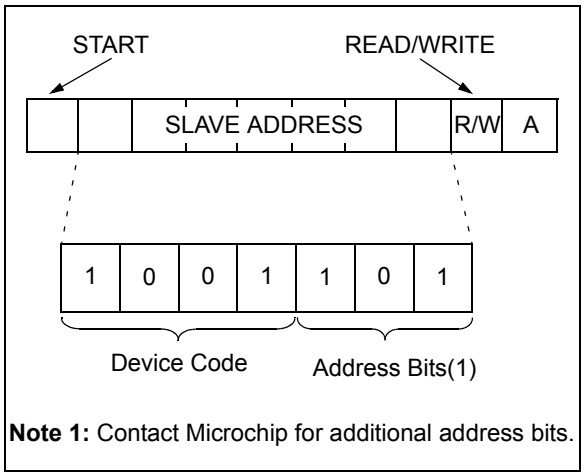

FIGURE 5-2: *Device Addressing.*

5.3 Executing a Conversion

This section will describe the details of communicating with the MCP3221 device. Initiating the sample-and-hold acquisition, reading the conversion data and executing multiple conversions will be discussed.

5.3.1 INITIATING THE SAMPLE AND HOLD

The acquisition and conversion of the input signal begins with the falling edge of the R/$\overline{W}$ bit of the address byte. At this point, the internal clock initiates the sample, hold and conversion cycle, all of which are internal to the ADC.

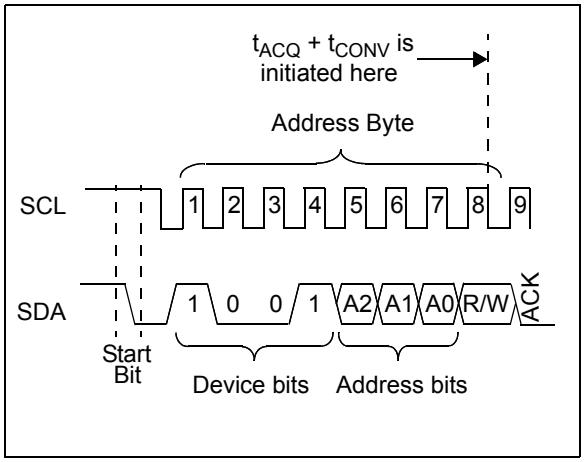

FIGURE 5-3: *Initiating the Conversion, Address Byte.*

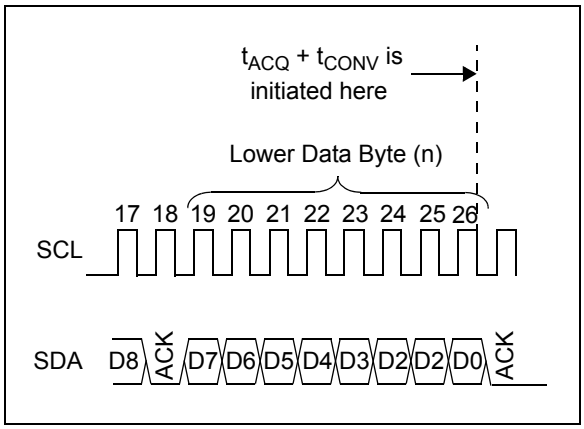

FIGURE 5-4: *Initiating the Conversion, Continuous Conversions.*

© 2006 Microchip Technology Inc.

The input signal will initially be sampled with the first falling edge of the clock following the transmission of a logic-high R/$\overline{W}$ bit. Additionally, with the rising edge of the SCL, the ADC will transmit an acknowledge bit (ACK = 0). The master must release the data bus during this clock pulse to allow the MCP3221 to pull the line low (refer to Figure 5-3).

For consecutive samples, sampling begins on the falling edge of the LSB of the conversion result, which is two bytes long. Refer to Figure 5-6 a for timing diagram.

5.3.2 READING THE CONVERSION DATA

Once the MCP3221 acknowledges the address byte, the device will transmit four '0' bits followed by the upper four data bits of the conversion. The master device will then acknowledge this byte with an ACK = Low. With the following 8 clock pulses, the MCP3221 will transmit the lower eight data bits from the conversion. The master then sends an ACK = high, indicating to the MCP3221 that no more data is requested. The master can then send a stop bit to end the transmission.

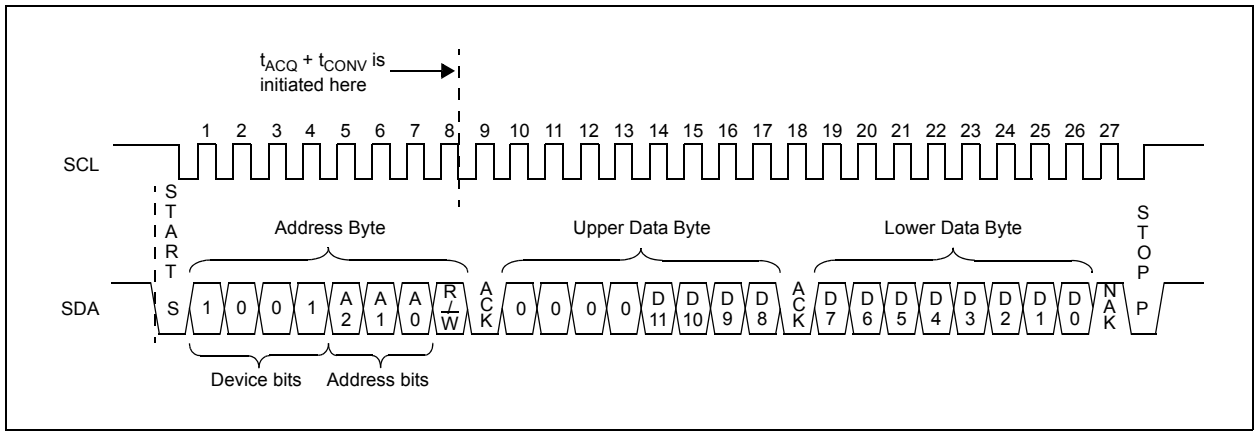

FIGURE 5-5: *Executing a Conversion.*

5.3.3 CONSECUTIVE CONVERSIONS

For consecutive samples, sampling begins on the falling edge of the LSB of the conversion result. See Figure 5-6 for timing.

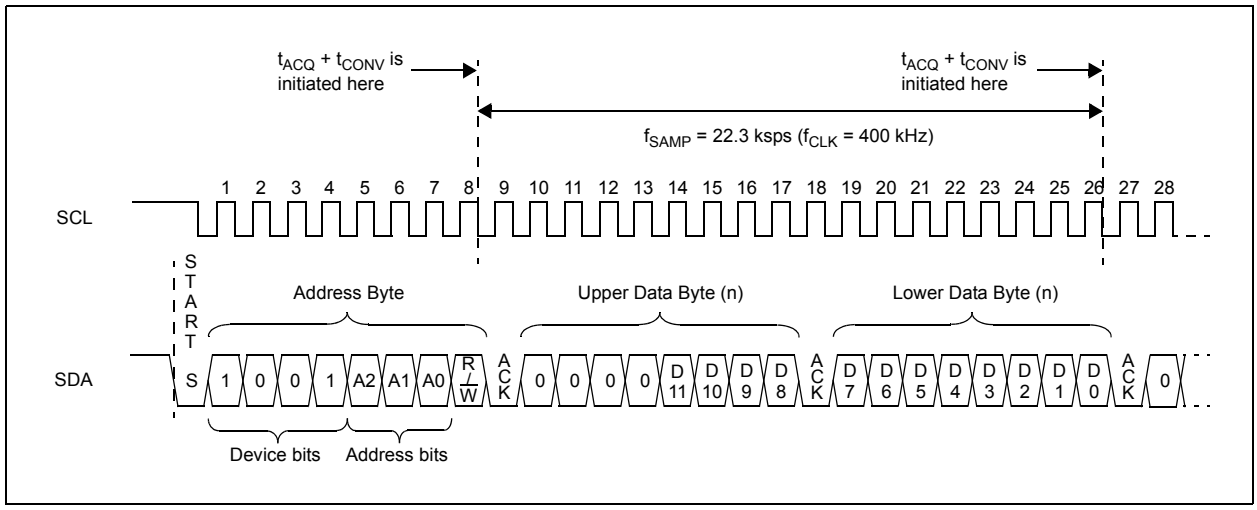

FIGURE 5-6: *Continuous Conversion.*

6.0 APPLICATIONS INFORMATION

6.1 Driving the Analog Input

The MCP3221 has a single-ended analog input (AIN). For proper conversion results, the voltage at the AIN pin must be kept between V_{SS} and V_{DD}. If the converter has no offset error, gain error, INL or DNL errors, and the voltage level of AIN is equal to or less than V_{SS} + 1/2 LSB, the resultant code will be `000h`. Additionally, if the voltage at AIN is equal to or greater than V_{DD} - 1.5 LSB, the output code will be `FFFh`.

The analog input model is shown in Figure 6-1. In this diagram, the source impedance (R_{SS}) adds to the internal sampling switch (R_S) impedance, directly affecting the time required to charge the capacitor (C_{SAMPLE}). Consequently, a larger source impedance increases the offset error, gain error and integral linearity errors of the conversion. Ideally, the impedance of the signal source should be near zero. This is achievable with an operational amplifier, such as the MCP6022, which has a closed-loop output impedance of tens of ohms.

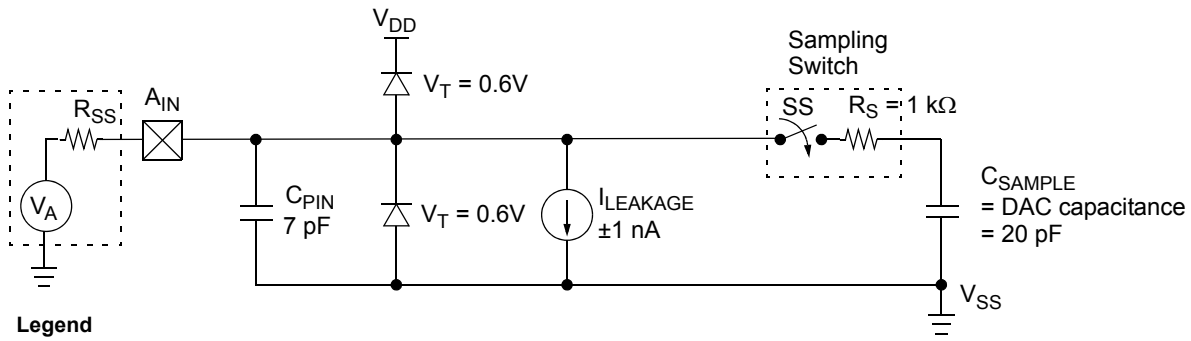

Legend

VA	=	signal source
R_{SS}	=	source impedance
A_{IN}	=	analog input pad
C_{PIN}	=	analog input pin capacitance
V_T	=	threshold voltage
$I_{LEAKAGE}$	=	leakage current at the pin due to various junctions
SS	=	sampling switch
R_S	=	sampling switch resistor
C_{SAMPLE}	=	sample/hold capacitance

FIGURE 6-1: *Analog Input Model, A_{IN}.*

6.2 Connecting to the I²C Bus

The I²C bus is an open-collector bus, requiring pull-up resistors connected to the SDA and SCL lines. This configuration is shown in Figure 6-2.

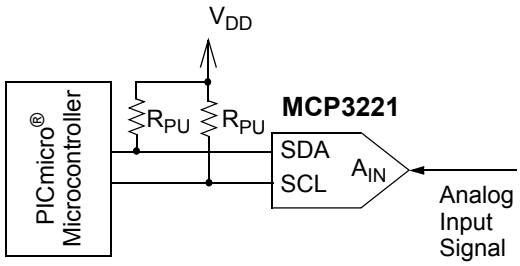

FIGURE 6-2: *Pull-up Resistors on I²C Bus.*

The number of devices connected to the bus is limited only by the maximum bus capacitance of 400 pF. A possible configuration using multiple devices is shown in Figure 6-3.

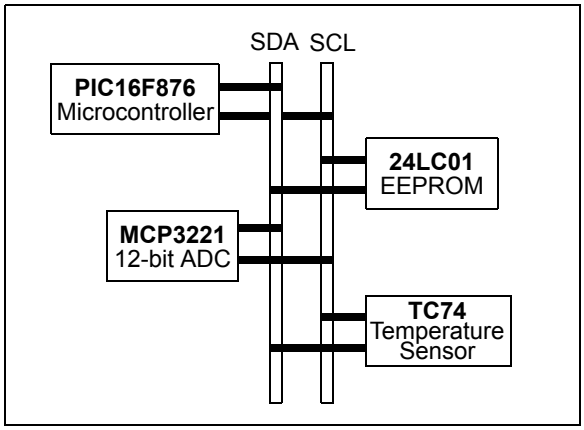

FIGURE 6-3: *Multiple Devices on I²C™ Bus.*

© 2006 Microchip Technology Inc.

6.3 Device Polling

In some instances, it may be necessary to test for MCP3221 presence on the I²C bus without performing a conversion. This operation is described in Figure 6-4. Here we are setting the R/$\overline{W}$ bit in the address byte to a zero. The MCP3221 will then acknowledge by pulling SDA low during the ACK clock and then release the bus back to the I²C master. A stop or repeated start bit can then be issued from the master and I²C communication can continue.

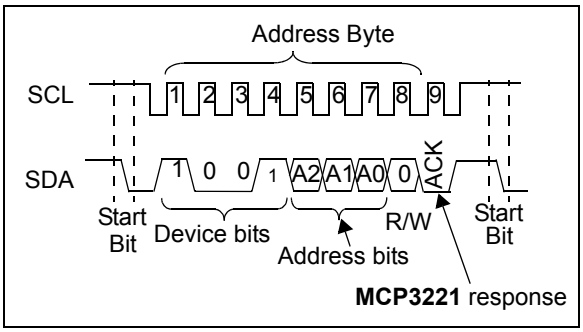

FIGURE 6-4: *Device Polling.*

6.4 Device Power and Layout Considerations

6.4.1 POWERING THE MCP3221

V_{DD} supplies the power to the device as well as the reference voltage. A bypass capacitor value of 0.1 µF is recommended. Adding a 10 µF capacitor in parallel is recommended to attenuate higher frequency noise present in some systems.

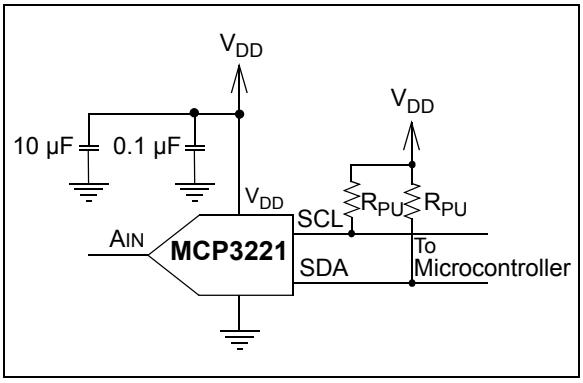

FIGURE 6-5: *Powering the MCP3221.*

6.4.2 LAYOUT CONSIDERATIONS

When laying out a printed circuit board for use with analog components, care should be taken to reduce noise wherever possible. A bypass capacitor from V_{DD} to ground should always be used with this device and should be placed as close as possible to the device pin. A bypass capacitor value of 0.1 µF is recommended.

Digital and analog traces should be separated as much as possible on the board, with no traces running underneath the device or the bypass capacitor. Extra precautions should be taken to keep traces with high-frequency signals (such as clock lines) as far as possible from analog traces.

Use of an analog ground plane is recommended in order to keep the ground potential the same for all devices on the board. Providing V_{DD} connections to devices in a "star" configuration can also reduce noise by eliminating current return paths and associated errors (Figure 6-6). For more information on layout tips when using the MCP3221 or other ADC devices, refer to AN688, *"Layout Tips for 12-Bit A/D Converter Applications"*.

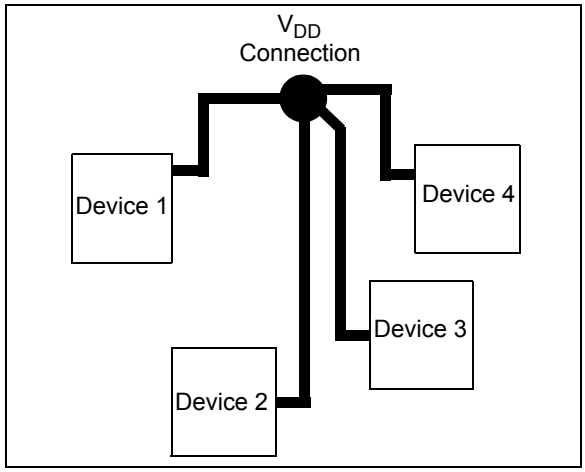

FIGURE 6-6: *V_{DD} traces arranged in a 'Star' configuration in order to reduce errors caused by current return paths.*

6.4.3 USING A REFERENCE FOR SUPPLY

The MCP3221 uses V_{DD} as both power and a reference. In some applications, it may be necessary to use a stable reference to achieve the required accuracy. Figure 6-7 shows an example using the MCP1541 as a 4.096V, 2% reference.

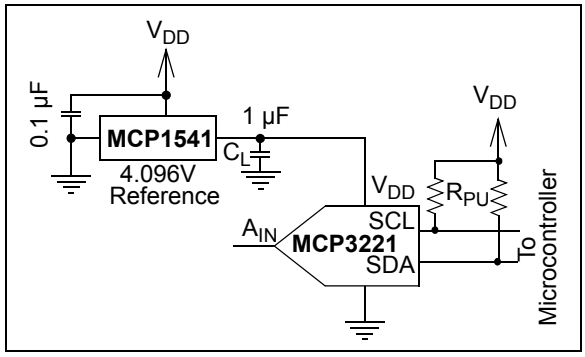

FIGURE 6-7: *Stable Power and Reference Configuration.*

7.0 PACKAGING INFORMATION

7.1 Package Marking Information

5-Pin SOT-23A (EIAJ SC-74) Device

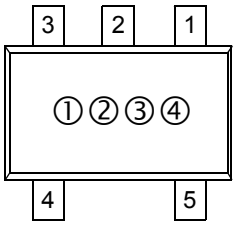

Part Number	Address Option	SOT-23
MCP3221A0T-I/OT	000	EE
MCP3221A1T-I/OT	001	EH
MCP3221A2T-I/OT	010	EB
MCP3221A3T-I/OT	011	EC
MCP3221A4T-I/OT	100	ED
MCP3221A5T-I/OT	101	S1 *
MCP3221A6T-I/OT	110	EF
MCP3221A7T-I/OT	111	EG
MCP3221A0T-E/OT	000	GE
MCP3221A1T-E/OT	001	GH
MCP3221A2T-E/OT	010	GB
MCP3221A3T-E/OT	011	GC
MCP3221A4T-E/OT	100	GD
MCP3221A5T-E/OT	101	GA *
MCP3221A6T-E/OT	110	GF
MCP3221A7T-E/OT	111	GG

* Default option. Contact Microchip Factory for other address options.

Legend:	1	Part Number code + temperature range
	2	Part Number code + temperature range
	3	Year and work week
	4	Lot ID
Note:	In the event the full Microchip part number cannot be marked on one line, it will be carried over to the next line thus limiting the number of available characters for customer specific information.	

* Standard device marking consists of Microchip part number, year code, week code, and traceability code.

© 2006 Microchip Technology Inc.

5-Lead Plastic Small Outline Transistor (OT) (SOT23)

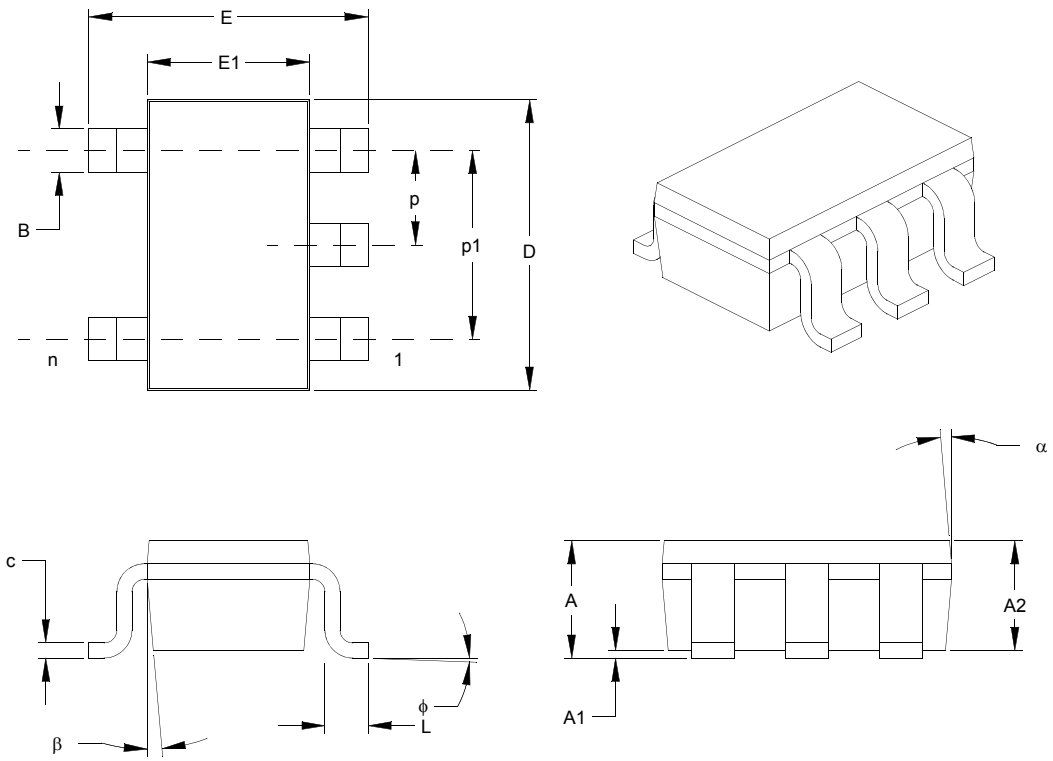

Units		INCHES*			MILLIMETERS		
Dimension Limits		MIN	NOM	MAX	MIN	NOM	MAX
Number of Pins	n		5			5	
Pitch	p		.038			0.95	
Outside lead pitch (basic)	p1		.075			1.90	
Overall Height	A	.035	.046	.057	0.90	1.18	1.45
Molded Package Thickness	A2	.035	.043	.051	0.90	1.10	1.30
Standoff	A1	.000	.003	.006	0.00	0.08	0.15
Overall Width	E	.102	.110	.118	2.60	2.80	3.00
Molded Package Width	E1	.059	.064	.069	1.50	1.63	1.75
Overall Length	D	.110	.116	.122	2.80	2.95	3.10
Foot Length	L	.014	.018	.022	0.35	0.45	0.55
Foot Angle	f	0	5	10	0	5	10
Lead Thickness	c	.004	.006	.008	0.09	0.15	0.20
Lead Width	B	.014	.017	.020	0.35	0.43	0.50
Mold Draft Angle Top	a	0	5	10	0	5	10
Mold Draft Angle Bottom	b	0	5	10	0	5	10

* Controlling Parameter

Notes:

Dimensions D and E1 do not include mold flash or protrusions. Mold flash or protrusions shall not exceed .005" (0.127mm) per side.

EIAJ Equivalent: SC-74A

Drawing No. C04-091 Revised 09-12-05

NOTES:

© 2006 Microchip Technology Inc.

APPENDIX A: REVISION HISTORY

Revision C (July 2006)

- Section 5.2 Device Address: Changed 4-bit device code to “1001”. Changed three address bits to “101”.

Revision B (May 2003)

- Numerous changes throughout document.

Revision A (November 2005)

- Original Release of this Document.

NOTES:

© 2006 Microchip Technology Inc.

PRODUCT IDENTIFICATION SYSTEM

To order or obtain information, e.g., on pricing or delivery, refer to the factory or the listed sales office.

PART NO.	XX	X	/XX
Device	Address Options	Temperature Range	Package

Device: MCP3221T: 12-Bit 2-Wire Serial A/D Converter (Tape and Reel)

Temperature Range: I = -40°C to +85°C
E = -40°C to +125°C

Address Options:

XX		A2	A1	A0
A0	=	0	0	0
A1	=	0	0	1
A2	=	0	1	0
A3	=	0	1	1
A4	=	1	0	0
A5 *	=	1	0	1
A6	=	1	1	0
A7	=	1	1	1

* Default option. Contact Microchip factory for other address options

Package: OT = SOT-23, 5-lead (Tape and Reel)

Examples:

a) MCP3221A0T-I/OT: Industrial, A0 Address, Tape and Reel
b) MCP3221A1T-I/OT: Industrial, A1 Address, Tape and Reel
c) MCP3221A2T-I/OT: Industrial, A2 Address, Tape and Reel
d) MCP3221A3T-I/OT: Industrial, A3 Address, Tape and Reel
e) MCP3221A4T-I/OT: Industrial, A4 Address, Tape and Reel
f) MCP3221A5T-I/OT: Industrial, A5 Address, Tape and Reel
g) MCP3221A6T-I/OT: Industrial, A6 Address, Tape and Reel
h) MCP3221A7T-I/OT: Industrial, A7 Address, Tape and Reel

a) MCP3221A0T-E/OT: Extended, A0 Address, Tape and Reel
b) MCP3221A1T-E/OT: Extended, A1 Address, Tape and Reel
c) MCP3221A2T-E/OT: Extended, A2 Address, Tape and Reel
d) MCP3221A3T-E/OT: Extended, A3 Address, Tape and Reel
e) MCP3221A4T-E/OT: Extended, A4 Address, Tape and Reel
f) MCP3221A5T-E/OT: Extended, A5 Address, Tape and Reel
g) MCP3221A6T-E/OT: Extended, A6 Address, Tape and Reel
h) MCP3221A7T-IE/OT: Extended, A7 Address, Tape and Reel

NOTES:

© 2006 Microchip Technology Inc.

Note the following details of the code protection feature on Microchip devices:

- Microchip products meet the specification contained in their particular Microchip Data Sheet.
- Microchip believes that its family of products is one of the most secure families of its kind on the market today, when used in the intended manner and under normal conditions.
- There are dishonest and possibly illegal methods used to breach the code protection feature. All of these methods, to our knowledge, require using the Microchip products in a manner outside the operating specifications contained in Microchip's Data Sheets. Most likely, the person doing so is engaged in theft of intellectual property.
- Microchip is willing to work with the customer who is concerned about the integrity of their code.
- Neither Microchip nor any other semiconductor manufacturer can guarantee the security of their code. Code protection does not mean that we are guaranteeing the product as "unbreakable."

Code protection is constantly evolving. We at Microchip are committed to continuously improving the code protection features of our products. Attempts to break Microchip's code protection feature may be a violation of the Digital Millennium Copyright Act. If such acts allow unauthorized access to your software or other copyrighted work, you may have a right to sue for relief under that Act.

Information contained in this publication regarding device applications and the like is provided only for your convenience and may be superseded by updates. It is your responsibility to ensure that your application meets with your specifications. MICROCHIP MAKES NO REPRESENTATIONS OR WARRANTIES OF ANY KIND WHETHER EXPRESS OR IMPLIED, WRITTEN OR ORAL, STATUTORY OR OTHERWISE, RELATED TO THE INFORMATION, INCLUDING BUT NOT LIMITED TO ITS CONDITION, QUALITY, PERFORMANCE, MERCHANTABILITY OR FITNESS FOR PURPOSE**.** Microchip disclaims all liability arising from this information and its use. Use of Microchip devices in life support and/or safety applications is entirely at the buyer's risk, and the buyer agrees to defend, indemnify and hold harmless Microchip from any and all damages, claims, suits, or expenses resulting from such use. No licenses are conveyed, implicitly or otherwise, under any Microchip intellectual property rights.

Trademarks

The Microchip name and logo, the Microchip logo, Accuron, dsPIC, KEELOQ, microID, MPLAB, PIC, PICmicro, PICSTART, PRO MATE, PowerSmart, rfPIC, and SmartShunt are registered trademarks of Microchip Technology Incorporated in the U.S.A. and other countries.

AmpLab, FilterLab, Migratable Memory, MXDEV, MXLAB, SEEVAL, SmartSensor and The Embedded Control Solutions Company are registered trademarks of Microchip Technology Incorporated in the U.S.A.

Analog-for-the-Digital Age, Application Maestro, CodeGuard, dsPICDEM, dsPICDEM.net, dsPICworks, ECAN, ECONOMONITOR, FanSense, FlexROM, fuzzyLAB, In-Circuit Serial Programming, ICSP, ICEPIC, Linear Active Thermistor, Mindi, MiWi, MPASM, MPLIB, MPLINK, PICkit, PICDEM, PICDEM.net, PICLAB, PICtail, PowerCal, PowerInfo, PowerMate, PowerTool, REAL ICE, rfLAB, rfPICDEM, Select Mode, Smart Serial, SmartTel, Total Endurance, UNI/O, WiperLock and ZENA are trademarks of Microchip Technology Incorporated in the U.S.A. and other countries.

SQTP is a service mark of Microchip Technology Incorporated in the U.S.A.

All other trademarks mentioned herein are property of their respective companies.

© 2006, Microchip Technology Incorporated, Printed in the U.S.A., All Rights Reserved.

Printed on recycled paper.

QUALITY MANAGEMENT SYSTEM
CERTIFIED BY DNV
ISO/TS 16949:2002

Microchip received ISO/TS-16949:2002 certification for its worldwide headquarters, design and wafer fabrication facilities in Chandler and Tempe, Arizona, Gresham, Oregon and Mountain View, California. The Company's quality system processes and procedures are for its PICmicro® 8-bit MCUs, KEELOQ® code hopping devices, Serial EEPROMs, microperipherals, nonvolatile memory and analog products. In addition, Microchip's quality system for the design and manufacture of development systems is ISO 9001:2000 certified.

WORLDWIDE SALES AND SERVICE

AMERICAS

Corporate Office
2355 West Chandler Blvd.
Chandler, AZ 85224-6199
Tel: 480-792-7200
Fax: 480-792-7277
Technical Support:
http://support.microchip.com
Web Address:
www.microchip.com

Asia Pacific Office
Suites 3707-14, 37th Floor
Tower 6, The Gateway
Habour City, Kowloon
Hong Kong
Tel: 852-2401-1200
Fax: 852-2401-3431

Atlanta
Alpharetta, GA
Tel: 770-640-0034
Fax: 770-640-0307

Boston
Westborough, MA
Tel: 774-760-0087
Fax: 774-760-0088

Chicago
Itasca, IL
Tel: 630-285-0071
Fax: 630-285-0075

Dallas
Addison, TX
Tel: 972-818-7423
Fax: 972-818-2924

Detroit
Farmington Hills, MI
Tel: 248-538-2250
Fax: 248-538-2260

Kokomo
Kokomo, IN
Tel: 765-864-8360
Fax: 765-864-8387

Los Angeles
Mission Viejo, CA
Tel: 949-462-9523
Fax: 949-462-9608

San Jose
Mountain View, CA
Tel: 650-215-1444
Fax: 650-961-0286

Toronto
Mississauga, Ontario,
Canada
Tel: 905-673-0699
Fax: 905-673-6509

ASIA/PACIFIC

Australia - Sydney
Tel: 61-2-9868-6733
Fax: 61-2-9868-6755

China - Beijing
Tel: 86-10-8528-2100
Fax: 86-10-8528-2104

China - Chengdu
Tel: 86-28-8676-6200
Fax: 86-28-8676-6599

China - Fuzhou
Tel: 86-591-8750-3506
Fax: 86-591-8750-3521

China - Hong Kong SAR
Tel: 852-2401-1200
Fax: 852-2401-3431

China - Qingdao
Tel: 86-532-8502-7355
Fax: 86-532-8502-7205

China - Shanghai
Tel: 86-21-5407-5533
Fax: 86-21-5407-5066

China - Shenyang
Tel: 86-24-2334-2829
Fax: 86-24-2334-2393

China - Shenzhen
Tel: 86-755-8203-2660
Fax: 86-755-8203-1760

China - Shunde
Tel: 86-757-2839-5507
Fax: 86-757-2839-5571

China - Wuhan
Tel: 86-27-5980-5300
Fax: 86-27-5980-5118

China - Xian
Tel: 86-29-8833-7250
Fax: 86-29-8833-7256

ASIA/PACIFIC

India - Bangalore
Tel: 91-80-4182-8400
Fax: 91-80-4182-8422

India - New Delhi
Tel: 91-11-5160-8631
Fax: 91-11-5160-8632

India - Pune
Tel: 91-20-2566-1512
Fax: 91-20-2566-1513

Japan - Yokohama
Tel: 81-45-471- 6166
Fax: 81-45-471-6122

Korea - Gumi
Tel: 82-54-473-4301
Fax: 82-54-473-4302

Korea - Seoul
Tel: 82-2-554-7200
Fax: 82-2-558-5932 or
82-2-558-5934

Malaysia - Penang
Tel: 60-4-646-8870
Fax: 60-4-646-5086

Philippines - Manila
Tel: 63-2-634-9065
Fax: 63-2-634-9069

Singapore
Tel: 65-6334-8870
Fax: 65-6334-8850

Taiwan - Hsin Chu
Tel: 886-3-572-9526
Fax: 886-3-572-6459

Taiwan - Kaohsiung
Tel: 886-7-536-4818
Fax: 886-7-536-4803

Taiwan - Taipei
Tel: 886-2-2500-6610
Fax: 886-2-2508-0102

Thailand - Bangkok
Tel: 66-2-694-1351
Fax: 66-2-694-1350

EUROPE

Austria - Wels
Tel: 43-7242-2244-3910
Fax: 43-7242-2244-393

Denmark - Copenhagen
Tel: 45-4450-2828
Fax: 45-4485-2829

France - Paris
Tel: 33-1-69-53-63-20
Fax: 33-1-69-30-90-79

Germany - Munich
Tel: 49-89-627-144-0
Fax: 49-89-627-144-44

Italy - Milan
Tel: 39-0331-742611
Fax: 39-0331-466781

Netherlands - Drunen
Tel: 31-416-690399
Fax: 31-416-690340

Spain - Madrid
Tel: 34-91-708-08-90
Fax: 34-91-708-08-91

UK - Wokingham
Tel: 44-118-921-5869
Fax: 44-118-921-5820

06/08/06

© 2006 Microchip Technology Inc.

Компания «ЭлектроПласт» предлагает заключение долгосрочных отношений при поставках импортных электронных компонентов на взаимовыгодных условиях!

Наши преимущества:

- Оперативные поставки широкого спектра электронных компонентов отечественного и импортного производства напрямую от производителей и с крупнейших мировых складов;
- Поставка более 17-ти миллионов наименований электронных компонентов;
- Поставка сложных, дефицитных, либо снятых с производства позиций;
- Оперативные сроки поставки под заказ (от 5 рабочих дней);
- Экспресс доставка в любую точку России;
- Техническая поддержка проекта, помощь в подборе аналогов, поставка прототипов;
- Система менеджмента качества сертифицирована по Международному стандарту ISO 9001;
- Лицензия ФСБ на осуществление работ с использованием сведений, составляющих государственную тайну;
- Поставка специализированных компонентов (Xilinx, Altera, Analog Devices, Intersil, Interpoint, Microsemi, Aeroflex, Peregrine, Syfer, Eurofarad, Texas Instrument, Miteq, Cobham, E2V, MA-COM, Hittite, Mini-Circuits,General Dynamics и др.);

Помимо этого, одним из направлений компании «ЭлектроПласт» является направление «Источники питания». Мы предлагаем Вам помощь Конструкторского отдела:

- Подбор оптимального решения, техническое обоснование при выборе компонента;
- Подбор аналогов;
- Консультации по применению компонента;
- Поставка образцов и прототипов;
- Техническая поддержка проекта;
- Защита от снятия компонента с производства.

Как с нами связаться

Телефон: 8 (812) 309 58 32 (многоканальный)
Факс: 8 (812) 320-02-42
Электронная почта: org@eplast1.ru
Адрес: 198099, г. Санкт-Петербург, ул. Калинина, дом 2, корпус 4, литера А.