# Micro Relay K (THT – THR)

- **Small power relay**
- **Limiting continuous current 30A**
- **Low weight**
- **Low noise operation**
- **Wave (THT) and reflow (THR/pin-in-paste) solderable versions**

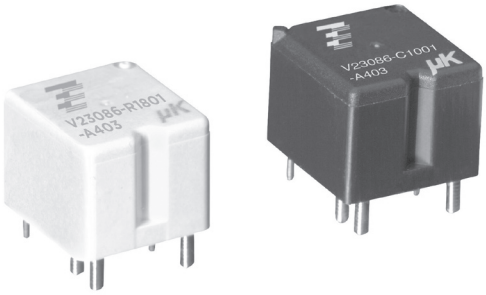


086C/R1_fcw1b

Typical applications
Car alarm, door control, door lock, heated front/rear screen, immobilizer, lamps front/rear/fog light, interior lights, seat control, sun roof, window lifter, wiper control.

## Contact Data

| Typical applications | Inductive load<br>V23086-*1*01-A403 | Wiper load<br>V23086-*1*02-A803 | Resistive/inductive load<br>V23086-*1*01-A402 | Lamp load[5]<br>V23086-*1*51-A502 |
|---|---|---|---|---|
| Contact arrangement | 1 form C, 1 CO | 1 form C, 1 CO | 1 form A, 1 NO | 1 form A, 1 NO |
| Rated voltage | 12VDC | 10VDC | 12VDC | 12VDC |
| | NO/NC | NO/NC | | |
| Rated current | 30/25A | 30/25A | 30A | 30A |
| Limiting continuous current | | | | |
| 23°C | 30/25A | 30/25A | 30A | 30A |
| 85°C | 20/15A | 20/15A | 20A | 20A |
| Limiting making current | 40A[1] | 40A[1] | 40A[1] | 100A[2] |
| Limiting breaking current | 30A | 30A | 30A | 30A |
| Contact material | | $AgSnO_2$ | | |
| Min. recommended contact load | | 1A at 5VDC[3] | | |
| Initial voltage drop at 10A, typ./max. | | 30/300mV | | |
| Operate/release time | | typ. 3/1.5ms[4] | | |
| Electrical enduranc | | | | |
| cyclic temperature -40°C, +25°C, +85°C | | | | |
| form C contact (CO) at 14VDC | motor reverse blocked, 25A, 0.77mH $>1x10^5$ ops. | wiper, 25A make/5A break, generator peak, 20A on NC,1mH $>1x10^6$ ops. | | |
| form A contact (NO) at 14VDC | | | resistive 20A $>3x10^5$ ops. | lamp 100A inrush, 10A steady state $>1x10^5$ ops.[5] |
| Mechanical endurance | | $>5x10^6$ ops. | | |

**Max. DC load breaking capacity**

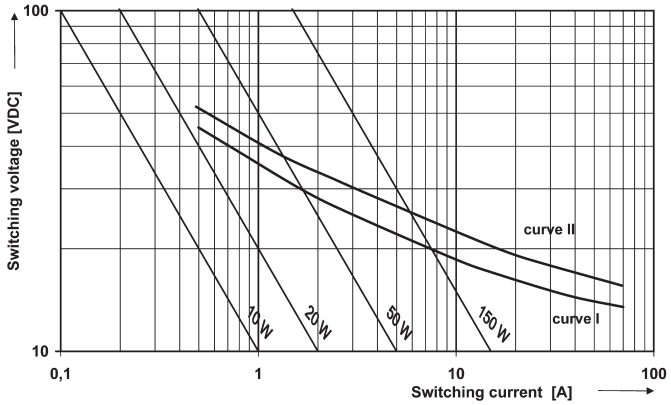


Load limit curve 1: arc extinguishes, during transit time (changeover contact).
Load limit curve 2: safe shutdown, no stationary arc (make contact).
Load limit curves measured with low inductive resistors verified for 1000 switching events.

1) The values apply to a resistive or inductive load with suitable spark suppression and at maximum 13.5VDC for 12VDC load voltages. For a load current duration of maximum 3s for a make/break ratio of 1:10.
2) Corresponds to the peak inrush current on initial actuation (cold filament).
3) See chapter Diagnostics of Relays in our Application Notes or consult the internet at http://relays.te.com/appnotes/
4) Measured at nominal voltage without coil suppression unit. A low resistive suppression device in parallel to the relay coil increases the release time and reducesthe lifetime caused by increased erosion and/or higher risk of contact tack welding.
5) Be aware of using right polarity, see Terminal Assignment. Wrong polarity will reduce endurance.



02-2015, Rev. 0215
www.te.com
© 2015 Tyco Electronics Corporation,
a TE Connectivity Ltd. company.

Datasheets and product specification according to IEC 61810-1 and to be used only together with the 'Definitions' section.

Datasheets and product data is subject to the terms of the disclaimer and all chapters of the 'Definitions' section, available at http://relays.te.com/definitions

Datasheets, product data, 'Definitions' section, application notes and all specifications are subject to change.

## Micro Relay K (THT – THR) (Continued)

### Coil Data

| | |
|---|---|
| Rated coil voltage | 12VDC |

**Coil versions, DC coil**

| Coil code | Rated voltage VDC | Operate voltage VDC | Release voltage VDC | Coil resistance Ω±10% | Rated coil power mW |
|---|---|---|---|---|---|
| 001/801 | 12 | 6.9 | 1.5 | 254 | 567 |
| 002/802 | 10 | 5.7 | 1.25 | 181 | 552 |
| 051/851 | 10 | 6.5 | 1.1 | 90 | 1111 |

All figures are given for coil without pre-energization, at ambient temperature +23°C.

**Coil operating range**

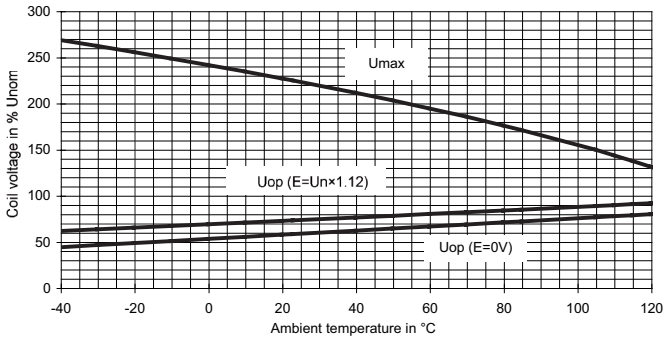


Does not take into account the temperature rise due to the contact current
E = pre-energization

### Insulation Data

| | |
|---|---|
| Initial dielectric strength | |
| between open contacts | $500VAC_{rms}$ |
| between contact and coil | $500VAC_{rms}$ |

### Other Data

| | |
|---|---|
| EU RoHS/ELV compliance | compliant |
| Ambient temperature, DC coil | -40 to +105°C |
| Cold storage, IEC 60068-2-1 | 1000h; -40°C |
| Dry heat, IEC 60068-2-2 | 1000h; +125°C |
| Climatic cycling with condensation, EN ISO 6988 | 20 cycles, storage 8/16h |
| Temperature cycling (shock), IEC 60068-2-14, Na | 100 cycles; -40/+125°C |
| Temperature cycling, IEC 60068-2-14, Nb | 35 cycles; -40/+125°C |
| Damp heat cyclic, IEC 60068-2-30, Db, variant 1 | 6 cycles 25°C/55°C/93%RH |
| Damp heat constant, IEC 60068-2-3 method Ca | 56 days 40°C/95%RH |
| Degree of protection | |
| THT: | RT III (61810), IP67 (IEC 60529) |
| THR: | RT II (61810), IP56 (IEC 60529) |
| Sealing test, IEC 60068-2-17: THT | Qc, method 2, 1min, 70°C |
| Corrosive gas | |
| IEC 60068-2-42 | 10 days |
| IEC 60068-2-43 | 10 days |
| Vibration resistance (functional) IEC 60068-2-6 (sine sweep) | 10 to 500Hz; 6g[6)] |
| Shock resistance (functional) IEC 60068-2-27 (half sine) | 6ms, up to 30g[6)] |
| Terminal type | PCB:THT, THR |
| Weight | approx. 4g (0.14oz) |
| Solderability (aging 3: 4h/155°C) THT IEC 60068-2-20 | Ta, method 1, hot dip 5s, 215°C |
| Solderability THR IEC60068-2-58 | hot dip 5s 245°C |
| Resistance to soldering heat THT IEC 60068-2-20 | Tb, method 1A, hot dip 10s, 260°C with thermal screen |
| Resistance to soldering heat THR IEC 60068-2-58 | 260°C; preheating min 130°C |
| Storage conditions | according IEC 60068-1[7)] |
| Packaging unit | 2000 pcs. |

6) Depending on mounting position: no change in the switching state >10µs.
7) For general storage and processing recommendations please refer to our Application Notes and especially to Storage in the Definitions or at http://relays.te.com/appnotes/


02-2015, Rev. 0215
www.te.com
© 2015 Tyco Electronics Corporation,
a TE Connectivity Ltd. company.

Datasheets and product specification according to IEC 61810-1 and to be used only together with the 'Definitions' section.

Datasheets and product data is subject to the terms of the disclaimer and all chapters of the 'Definitions' section, available at http://relays.te.com/definitions

Datasheets, product data, 'Definitions' section, application notes and all specifications are subject to change.

## Micro Relay K (THT – THR) (Continued)

**Terminal Assignment**
Bottom view on solder pins

1 form A, 1 NO

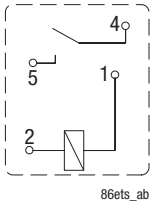


1 form C, 1 CO

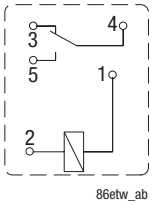


1 form A, 1 NO (lamp load)

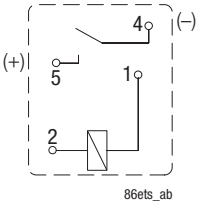


**Dimensions**
Micro Relay K, THT version

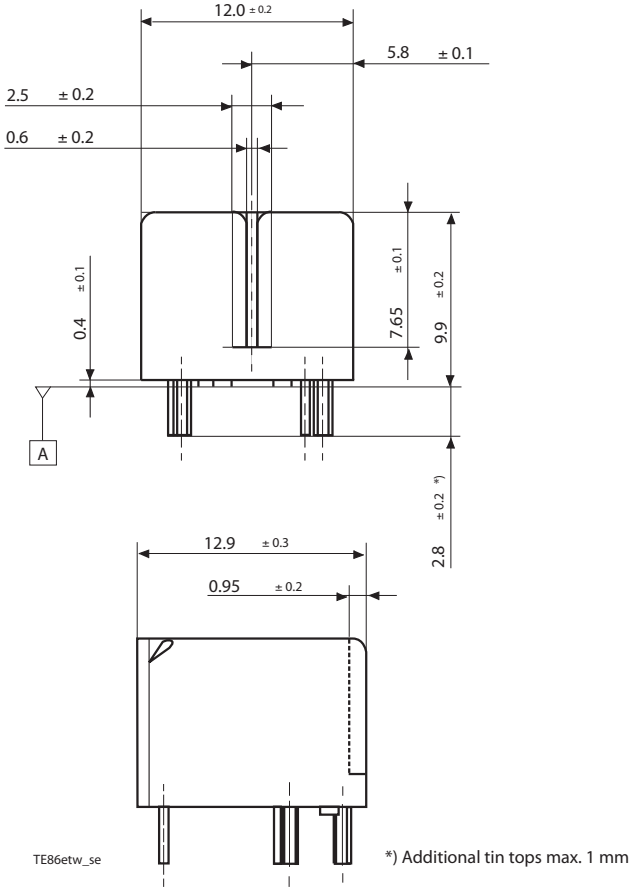


*) Additional tin tops max. 1mm

**Mounting Hole Layout**
Bottom view on solder pins

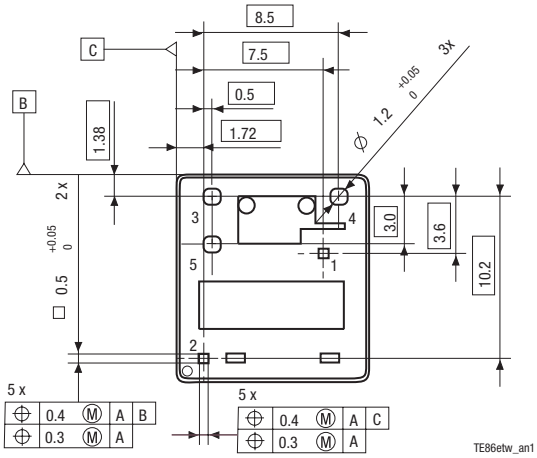


Remark: Positional tolerances according to DIN EN ISO 5458



02-2015, Rev. 0215
www.te.com
© 2015 Tyco Electronics Corporation,
a TE Connectivity Ltd. company.

Datasheets and product specification according to IEC 61810-1 and to be used only together with the 'Definitions' section.

Datasheets and product data is subject to the terms of the disclaimer and all chapters of the 'Definitions' section, available at http://relays.te.com/definitions

Datasheets, product data, 'Definitions' section, application notes and all specifications are subject to change.

## Micro Relay K (THT – THR) (Continued)

Micro Relay K, THR version

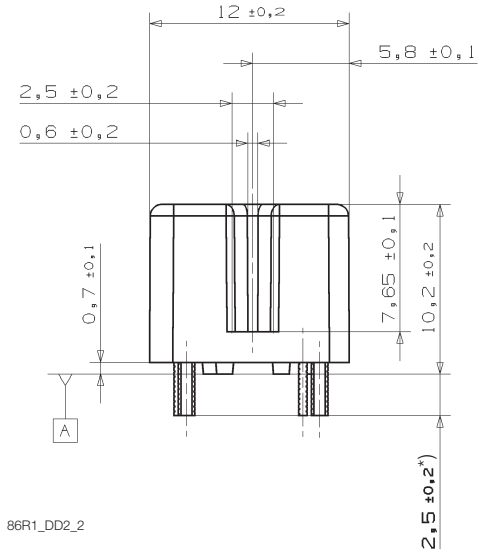


86R1_DD2_2

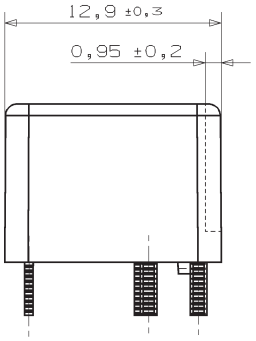


86R1_DD1_2

*) Additional tin tops max. 1mm

**Mounting Hole Layout**
Bottom view on solder pins

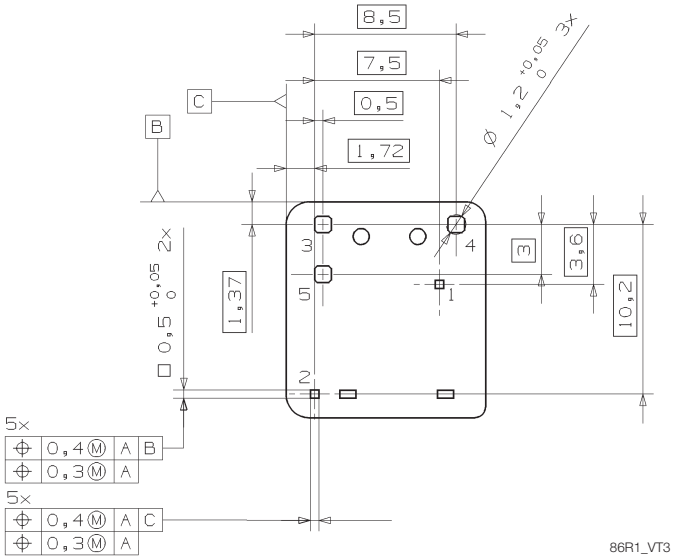


86R1_VT3

**View of Stand-Offs**
Bottom view on solder pins

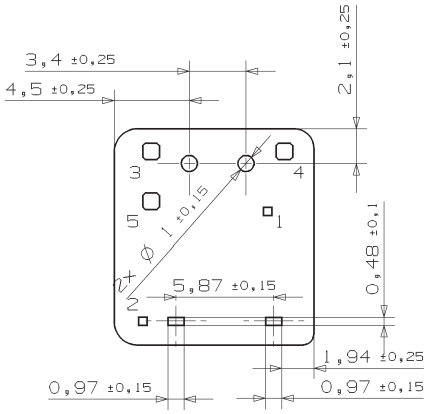


86R1_VT1



02-2015, Rev. 0215
www.te.com
© 2015 Tyco Electronics Corporation,
a TE Connectivity Ltd. company.

Datasheets and product specification according to IEC 61810-1 and to be used only together with the 'Definitions' section.

Datasheets and product data is subject to the terms of the disclaimer and all chapters of the 'Definitions' section, available at http://relays.te.com/definitions

Datasheets, product data, 'Definitions' section, application notes and all specifications are subject to change.

## Micro Relay K (THT – THR) (Continued)

**Product code structure** Typical product code **V23086 -C 1 001 -A 4 03**

**Type**
**V23086** Micro Relay K (THT – THR)

**Terminal and enclosure**
**C** PCB version THT, sealed **R** PCB version THR, vented

**Design**
**1** Single relay

**Coil**
**001** Standard (THT) **002** Sensitive (THT)
**801** Standard (THR) **802** Sensitive (THR)
**051** Lamp load (THT) **851** Lamp load (THR)

**Contact type**
**A** Single contact

**Contact material index**
**4** $AgSnO_2$ standard **8** $AgSnO_2$ wiper load
**5** $AgSnO_2$ lamp load

**Contact arrangement index**
**02** NO **03** CO

| Product code | Version | Design | Coil | Contact | Cont. material | Arrangement | Part number |
|---|---|---|---|---|---|---|---|
| V23086-C1001-A402 | PCB THT, | Single | Standard | Single | $AgSnO_2$ (standard) | 1 form A, 1 NO | 0-1393280-5 |
| V23086-C1001-A403 | cleanable | | | | | 1 form C, 1 CO | 0-1393280-6 |
| V23086-C1051-A502 | | | Lamp load | | $AgSnO_2$ (lamp) | 1 form A, 1 NO | 2-1904093-1 |
| V23086-C1002-A803 | | | Sensitive | | $AgSnO_2$ (lwiper) | 1 form C, 1 CO | 2-1414987-3 |
| V23086-R1801-A402 | PCB THR, | | Standard | | $AgSnO_2$ (standard) | 1 form A, 1 NO | 2-1904093-2 |
| V23086-R1801-A403 | vented | | | | | 1 form C, 1 CO | 6-1414920-0 |
| V23086-R1851-A502 | | | Lamp load | | $AgSnO_2$ (lamp) | 1 form A, 1 NO | 9-1904064-4 |
| V23086-R1802-A803 | | | Sensitive | | $AgSnO_2$ (lwiper) | 1 form C, 1 CO | 7-1414967-8 |

This list represents the most common types and does not show all variants covered by this datasheet.
Other types on request.



02-2015, Rev. 0215
www.te.com
© 2015 Tyco Electronics Corporation,
a TE Connectivity Ltd. company.

Datasheets and product specification according to IEC 61810-1 and to be used only together with the 'Definitions' section.

Datasheets and product data is subject to the terms of the disclaimer and all chapters of the 'Definitions' section, available at http://relays.te.com/definitions

Datasheets, product data, 'Definitions' section, application notes and all specifications are subject to change.

Компания «ЭлектроПласт» предлагает заключение долгосрочных отношений при поставках импортных электронных компонентов на взаимовыгодных условиях!

Наши преимущества:

- Оперативные поставки широкого спектра электронных компонентов отечественного и импортного производства напрямую от производителей и с крупнейших мировых складов;
- Поставка более 17-ти миллионов наименований электронных компонентов;
- Поставка сложных, дефицитных, либо снятых с производства позиций;
- Оперативные сроки поставки под заказ (от 5 рабочих дней);
- Экспресс доставка в любую точку России;
- Техническая поддержка проекта, помощь в подборе аналогов, поставка прототипов;
- Система менеджмента качества сертифицирована по Международному стандарту ISO 9001;
- Лицензия ФСБ на осуществление работ с использованием сведений, составляющих государственную тайну;
- Поставка специализированных компонентов (Xilinx, Altera, Analog Devices, Intersil, Interpoint, Microsemi, Aeroflex, Peregrine, Syfer, Eurofarad, Texas Instrument, Miteq, Cobham, E2V, MA-COM, Hittite, Mini-Circuits,General Dynamics и др.);

Помимо этого, одним из направлений компании «ЭлектроПласт» является направление «Источники питания». Мы предлагаем Вам помощь Конструкторского отдела:

- Подбор оптимального решения, техническое обоснование при выборе компонента;
- Подбор аналогов;
- Консультации по применению компонента;
- Поставка образцов и прототипов;
- Техническая поддержка проекта;
- Защита от снятия компонента с производства.

**Как с нами связаться**

**Телефон:** 8 (812) 309 58 32 (многоканальный)
**Факс:** 8 (812) 320-02-42
**Электронная почта:** org@eplast1.ru
**Адрес:** 198099, г. Санкт-Петербург, ул. Калинина, дом 2, корпус 4, литера А.