Micro Relay K (THT – THR)

- **Small power relay**
- **Limiting continuous current 30A**
- **Low weight**
- **Low noise operation**
- **Wave (THT) and reflow (THR/pin-in-paste) solderable versions**

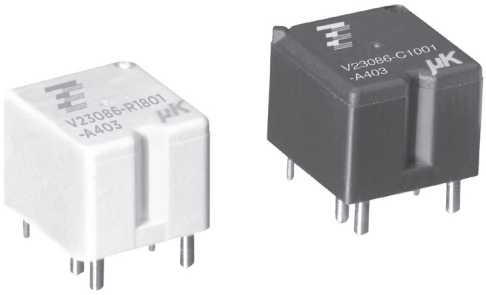

086C/R1_fcw1b

Typical applications
Car alarm, door control, door lock, heated front/rear screen, immobilizer, lamps front/rear/fog light, interior lights, seat control, sun roof, window lifter, wiper control.

Contact Data

Typical applications	Inductive load V23086-*1*01-A403	Wiper load V23086-*1*02-A803	Resistive/inductive load V23086-*1*01-A402	Lamp load[5] V23086-*1*51-A502
Contact arrangement	1 form C, 1 CO	1 form C, 1 CO	1 form A, 1 NO	1 form A, 1 NO
Rated voltage	12VDC	10VDC	12VDC	12VDC
	NO/NC	NO/NC		
Rated current	30/25A	30/25A	30A	30A
Limiting continuous current				
23°C	30/25A	30/25A	30A	30A
85°C	20/15A	20/15A	20A	20A
Limiting making current	40A[1]	40A[1]	40A[1]	100A[2]
Limiting breaking current	30A	30A	30A	30A
Contact material		$AgSnO_2$		
Min. recommended contact load		1A at 5VDC[3]		
Initial voltage drop at 10A, typ./max.		30/300mV		
Operate/release time		typ. 3/1.5ms[4]		
Electrical enduranc				
cyclic temperature -40°C, +25°C, +85°C				
form C contact (CO) at 14VDC	motor reverse blocked, 25A, 0.77mH $>1x10^5$ ops.	wiper, 25A make/5A break, generator peak, 20A on NC,1mH $>1x10^6$ ops.		
form A contact (NO) at 14VDC			resistive 20A $>3x10^5$ ops.	lamp 100A inrush, 10A steady state $>1x10^5$ ops.[5]
Mechanical endurance		$>5x10^6$ ops.		

Max. DC load breaking capacity

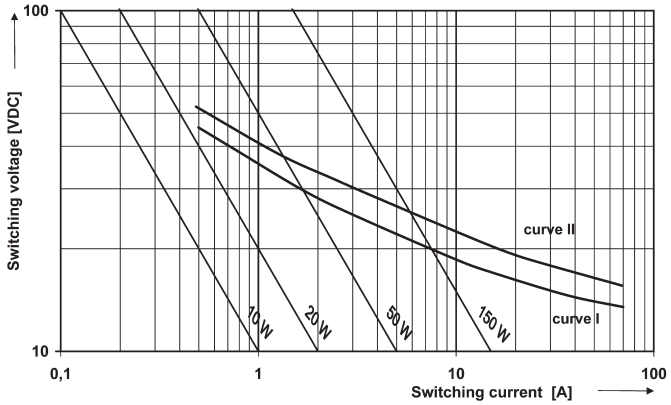

Load limit curve 1: arc extinguishes, during transit time (changeover contact).
Load limit curve 2: safe shutdown, no stationary arc (make contact).
Load limit curves measured with low inductive resistors verified for 1000 switching events.

1) The values apply to a resistive or inductive load with suitable spark suppression and at maximum 13.5VDC for 12VDC load voltages. For a load current duration of maximum 3s for a make/break ratio of 1:10.
2) Corresponds to the peak inrush current on initial actuation (cold filament).
3) See chapter Diagnostics of Relays in our Application Notes or consult the internet at http://relays.te.com/appnotes/
4) Measured at nominal voltage without coil suppression unit. A low resistive suppression device in parallel to the relay coil increases the release time and reducesthe lifetime caused by increased erosion and/or higher risk of contact tack welding.
5) Be aware of using right polarity, see Terminal Assignment. Wrong polarity will reduce endurance.

02-2015, Rev. 0215
www.te.com
© 2015 Tyco Electronics Corporation,
a TE Connectivity Ltd. company.

Datasheets and product specification according to IEC 61810-1 and to be used only together with the 'Definitions' section.

Datasheets and product data is subject to the terms of the disclaimer and all chapters of the 'Definitions' section, available at http://relays.te.com/definitions

Datasheets, product data, 'Definitions' section, application notes and all specifications are subject to change.

Micro Relay K (THT – THR) (Continued)

Coil Data

Rated coil voltage	12VDC

Coil versions, DC coil

Coil code	Rated voltage VDC	Operate voltage VDC	Release voltage VDC	Coil resistance Ω±10%	Rated coil power mW
001/801	12	6.9	1.5	254	567
002/802	10	5.7	1.25	181	552
051/851	10	6.5	1.1	90	1111

All figures are given for coil without pre-energization, at ambient temperature +23°C.

Coil operating range

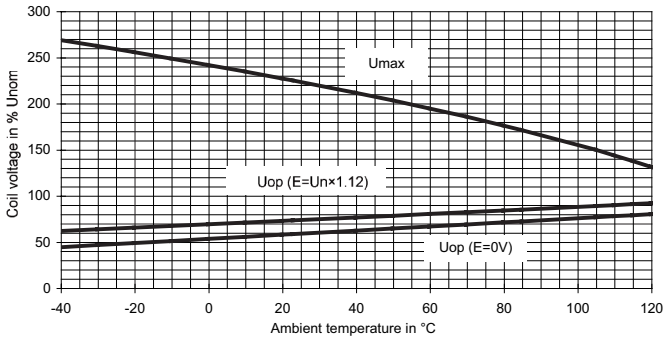

Does not take into account the temperature rise due to the contact current
E = pre-energization

Insulation Data

Initial dielectric strength	
between open contacts	$500VAC_{rms}$
between contact and coil	$500VAC_{rms}$

Other Data

EU RoHS/ELV compliance	compliant
Ambient temperature, DC coil	-40 to +105°C
Cold storage, IEC 60068-2-1	1000h; -40°C
Dry heat, IEC 60068-2-2	1000h; +125°C
Climatic cycling with condensation, EN ISO 6988	20 cycles, storage 8/16h
Temperature cycling (shock), IEC 60068-2-14, Na	100 cycles; -40/+125°C
Temperature cycling, IEC 60068-2-14, Nb	35 cycles; -40/+125°C
Damp heat cyclic, IEC 60068-2-30, Db, variant 1	6 cycles 25°C/55°C/93%RH
Damp heat constant, IEC 60068-2-3 method Ca	56 days 40°C/95%RH
Degree of protection	
THT:	RT III (61810), IP67 (IEC 60529)
THR:	RT II (61810), IP56 (IEC 60529)
Sealing test, IEC 60068-2-17: THT	Qc, method 2, 1min, 70°C
Corrosive gas	
IEC 60068-2-42	10 days
IEC 60068-2-43	10 days
Vibration resistance (functional) IEC 60068-2-6 (sine sweep)	10 to 500Hz; 6g[6)]
Shock resistance (functional) IEC 60068-2-27 (half sine)	6ms, up to 30g[6)]
Terminal type	PCB:THT, THR
Weight	approx. 4g (0.14oz)
Solderability (aging 3: 4h/155°C) THT IEC 60068-2-20	Ta, method 1, hot dip 5s, 215°C
Solderability THR IEC60068-2-58	hot dip 5s 245°C
Resistance to soldering heat THT IEC 60068-2-20	Tb, method 1A, hot dip 10s, 260°C with thermal screen
Resistance to soldering heat THR IEC 60068-2-58	260°C; preheating min 130°C
Storage conditions	according IEC 60068-1[7)]
Packaging unit	2000 pcs.

6) Depending on mounting position: no change in the switching state >10µs.
7) For general storage and processing recommendations please refer to our Application Notes and especially to Storage in the Definitions or at http://relays.te.com/appnotes/

02-2015, Rev. 0215
www.te.com
© 2015 Tyco Electronics Corporation,
a TE Connectivity Ltd. company.

Datasheets and product specification according to IEC 61810-1 and to be used only together with the 'Definitions' section.

Datasheets and product data is subject to the terms of the disclaimer and all chapters of the 'Definitions' section, available at http://relays.te.com/definitions

Datasheets, product data, 'Definitions' section, application notes and all specifications are subject to change.

Micro Relay K (THT – THR) (Continued)

Terminal Assignment
Bottom view on solder pins

1 form A, 1 NO

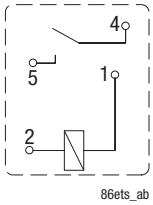

1 form C, 1 CO

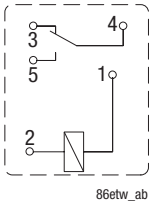

1 form A, 1 NO (lamp load)

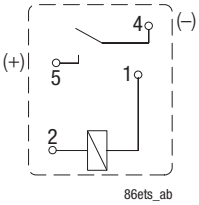

Dimensions
Micro Relay K, THT version

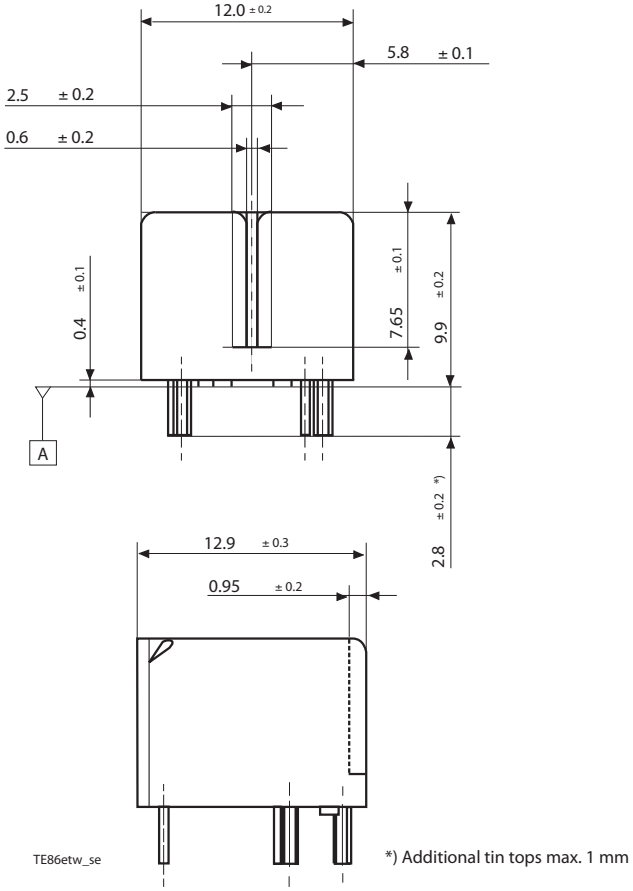

*) Additional tin tops max. 1mm

Mounting Hole Layout
Bottom view on solder pins

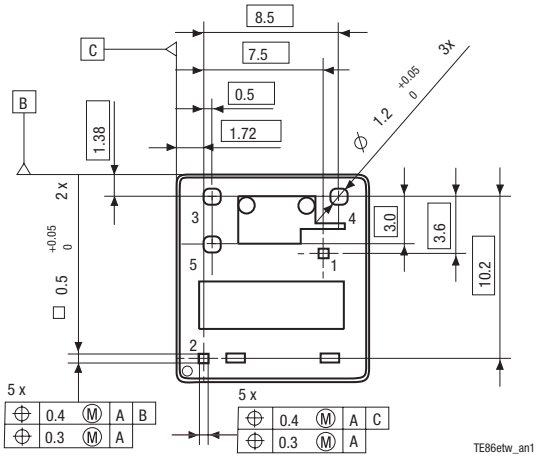

Remark: Positional tolerances according to DIN EN ISO 5458

02-2015, Rev. 0215
www.te.com
© 2015 Tyco Electronics Corporation,
a TE Connectivity Ltd. company.

Datasheets and product specification according to IEC 61810-1 and to be used only together with the 'Definitions' section.

Datasheets and product data is subject to the terms of the disclaimer and all chapters of the 'Definitions' section, available at http://relays.te.com/definitions

Datasheets, product data, 'Definitions' section, application notes and all specifications are subject to change.

Micro Relay K (THT – THR) (Continued)

Micro Relay K, THR version

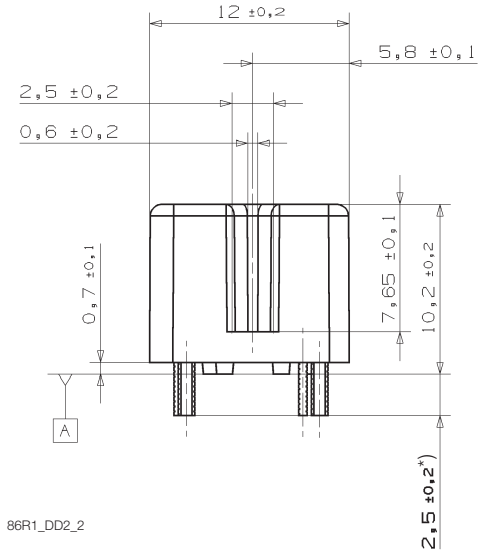

86R1_DD2_2

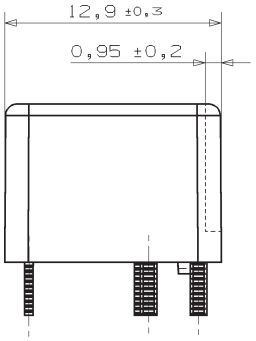

86R1_DD1_2

*) Additional tin tops max. 1mm

Mounting Hole Layout
Bottom view on solder pins

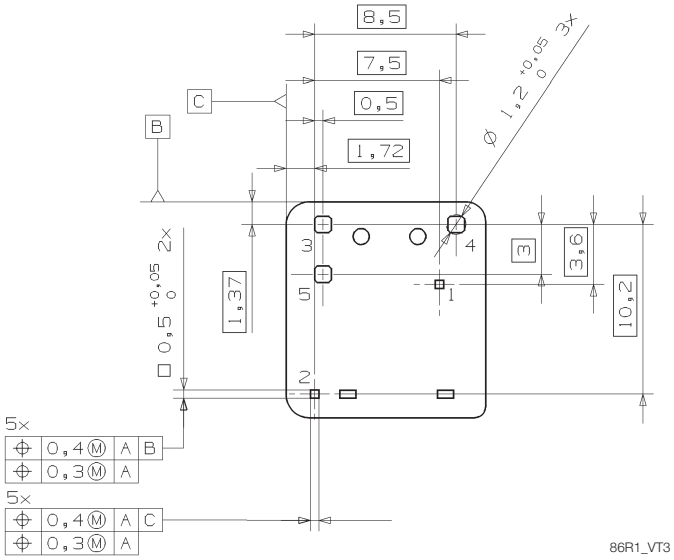

86R1_VT3

View of Stand-Offs
Bottom view on solder pins

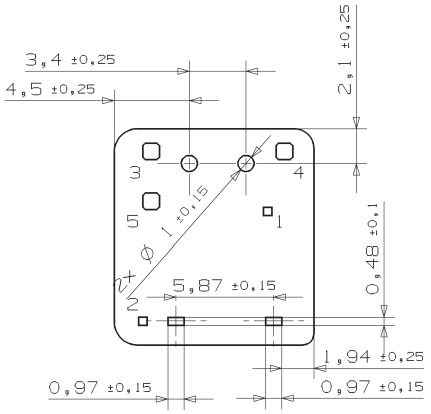

86R1_VT1

02-2015, Rev. 0215
www.te.com
© 2015 Tyco Electronics Corporation,
a TE Connectivity Ltd. company.

Datasheets and product specification according to IEC 61810-1 and to be used only together with the 'Definitions' section.

Datasheets and product data is subject to the terms of the disclaimer and all chapters of the 'Definitions' section, available at http://relays.te.com/definitions

Datasheets, product data, 'Definitions' section, application notes and all specifications are subject to change.

Micro Relay K (THT – THR) (Continued)

Product code structure Typical product code **V23086 -C 1 001 -A 4 03**

Type
V23086 Micro Relay K (THT – THR)

Terminal and enclosure
C PCB version THT, sealed **R** PCB version THR, vented

Design
1 Single relay

Coil
001 Standard (THT) **002** Sensitive (THT)
801 Standard (THR) **802** Sensitive (THR)
051 Lamp load (THT) **851** Lamp load (THR)

Contact type
A Single contact

Contact material index
4 $AgSnO_2$ standard **8** $AgSnO_2$ wiper load
5 $AgSnO_2$ lamp load

Contact arrangement index
02 NO **03** CO

Product code	Version	Design	Coil	Contact	Cont. material	Arrangement	Part number
V23086-C1001-A402	PCB THT,	Single	Standard	Single	$AgSnO_2$ (standard)	1 form A, 1 NO	0-1393280-5
V23086-C1001-A403	cleanable					1 form C, 1 CO	0-1393280-6
V23086-C1051-A502			Lamp load		$AgSnO_2$ (lamp)	1 form A, 1 NO	2-1904093-1
V23086-C1002-A803			Sensitive		$AgSnO_2$ (lwiper)	1 form C, 1 CO	2-1414987-3
V23086-R1801-A402	PCB THR,		Standard		$AgSnO_2$ (standard)	1 form A, 1 NO	2-1904093-2
V23086-R1801-A403	vented					1 form C, 1 CO	6-1414920-0
V23086-R1851-A502			Lamp load		$AgSnO_2$ (lamp)	1 form A, 1 NO	9-1904064-4
V23086-R1802-A803			Sensitive		$AgSnO_2$ (lwiper)	1 form C, 1 CO	7-1414967-8

This list represents the most common types and does not show all variants covered by this datasheet.
Other types on request.

02-2015, Rev. 0215
www.te.com
© 2015 Tyco Electronics Corporation,
a TE Connectivity Ltd. company.

Datasheets and product specification according to IEC 61810-1 and to be used only together with the 'Definitions' section.

Datasheets and product data is subject to the terms of the disclaimer and all chapters of the 'Definitions' section, available at http://relays.te.com/definitions

Datasheets, product data, 'Definitions' section, application notes and all specifications are subject to change.

Компания «ЭлектроПласт» предлагает заключение долгосрочных отношений при поставках импортных электронных компонентов на взаимовыгодных условиях!

Наши преимущества:

- Оперативные поставки широкого спектра электронных компонентов отечественного и импортного производства напрямую от производителей и с крупнейших мировых складов;
- Поставка более 17-ти миллионов наименований электронных компонентов;
- Поставка сложных, дефицитных, либо снятых с производства позиций;
- Оперативные сроки поставки под заказ (от 5 рабочих дней);
- Экспресс доставка в любую точку России;
- Техническая поддержка проекта, помощь в подборе аналогов, поставка прототипов;
- Система менеджмента качества сертифицирована по Международному стандарту ISO 9001;
- Лицензия ФСБ на осуществление работ с использованием сведений, составляющих государственную тайну;
- Поставка специализированных компонентов (Xilinx, Altera, Analog Devices, Intersil, Interpoint, Microsemi, Aeroflex, Peregrine, Syfer, Eurofarad, Texas Instrument, Miteq, Cobham, E2V, MA-COM, Hittite, Mini-Circuits,General Dynamics и др.);

Помимо этого, одним из направлений компании «ЭлектроПласт» является направление «Источники питания». Мы предлагаем Вам помощь Конструкторского отдела:

- Подбор оптимального решения, техническое обоснование при выборе компонента;
- Подбор аналогов;
- Консультации по применению компонента;
- Поставка образцов и прототипов;
- Техническая поддержка проекта;
- Защита от снятия компонента с производства.

Как с нами связаться

Телефон: 8 (812) 309 58 32 (многоканальный)
Факс: 8 (812) 320-02-42
Электронная почта: org@eplast1.ru
Адрес: 198099, г. Санкт-Петербург, ул. Калинина, дом 2, корпус 4, литера А.