molex
one company › a world of innovation

This document was generated on 05/25/2010

PLEASE CHECK WWW.MOLEX.COM FOR LATEST PART INFORMATION

Part Number: 0754921047

Status: Active

Overview: gbx_backplane_connector_system

Description: 1.85mm by 1.85mm (.073 by .073") Pitch 2-Pair GbX® Backplane Connector System, Power Module, 4 Circuits, 1.27µm (50µ") Gold (Au)

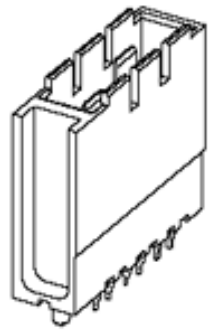

Series image - Reference only

Documents:

Drawing (PDF)

RoHS Certificate of Compliance (PDF)

Product Specification PS-75221-999 (PDF)

Agency Certification

UL	E29179

General

Product Family	Backplane Connectors
Series	75492
Application	Backplane
Application Tooling Documents	Tooling Manual
Comments	Blade Length A 4.50mm, B 7.50mm
Component Type	Power Header
Overview	gbx_backplane_connector_system
Product Name	GbX®
Style	N/A

Physical

Circuits (Loaded)	4
Circuits (maximum)	4
Circuits Detail	Rows A & B
Color - Resin	Gray (Dark)
Durability (mating cycles max)	200
First Mate / Last Break	Yes
Flammability	94V-0
Guide to Mating Part	No
Keying to Mating Part	None
Material - Metal	High Performance Alloy (HPA)
Material - Plating Mating	Gold
Material - Plating Termination	Tin-Lead
Material - Resin	High Temperature Thermoplastic
Number of Columns	N/A
Number of Pairs	2
Number of Rows	2
Orientation	Vertical
PC Tail Length (in)	0.090 In
PC Tail Length (mm)	2.28 mm
PCB Locator	Yes
PCB Retention	Yes
PCB Thickness Recommended (in)	0.063 In
PCB Thickness Recommended (mm)	1.60 mm
Packaging Type	Tube
Pitch - Mating Interface (in)	0.730 In
Pitch - Mating Interface (mm)	1.85 mm
Pitch - Term. Interface (in)	0.102 In
Pitch - Term. Interface (mm)	2.60 mm
Plating min: Mating (µin)	50
Plating min: Mating (µm)	1.25

EU RoHS
RoHS Compliant by Exemption

China RoHS
50
Pb

REACH SVHC
Contains SVHC: No

Halogen-Free Status
Halogen-Free

Need more information on product environmental compliance?

Email productcompliance@molex.com
For a multiple part number RoHS Certificate of Compliance, click here

Please visit the Contact Us section for any non-product compliance questions.

Search Parts in this Series
75492Series

Mates With
75292 GbX® Daughtercard

Application Tooling | **FAQ**

Tooling specifications and manuals are found by selecting the products below. Crimp Height Specifications are then contained in the Application Tooling Specification document.

Global

Description	Product #
GbX® Shield Removal Tool	0622022100
GbX® 2 Pair 1-Up Power Module	0622022480

Plating min: Termination (µin)	30
Plating min: Termination (µm)	0.75
Polarized to PCB	Yes
Stackable	No
Surface Mount Compatible (SMC)	Yes
Temperature Range - Operating	105°C
Termination Interface: Style	Through Hole - Compliant Pin

Electrical

Current - Maximum per Contact	6A
Data Rate	8.0 Gbps
Shielded	No
Voltage - Maximum	120V AC (RMS)/DC

Material Info

Reference - Drawing Numbers

Packaging Specification	PK-70873-578
Product Specification	PS-75221-999
Sales Drawing	SD-75492-001

GbX is a registered trademark of Amphenol Corporation.

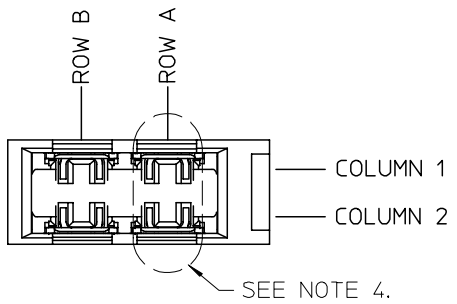

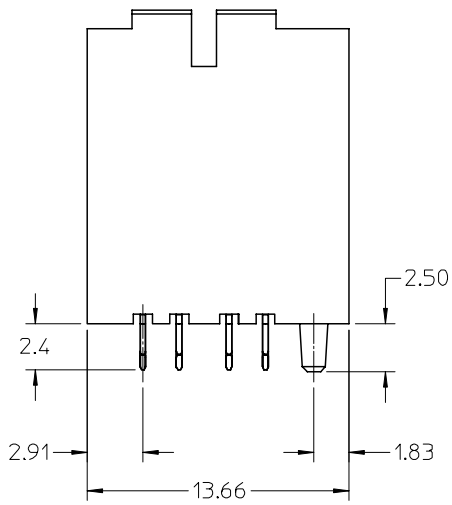

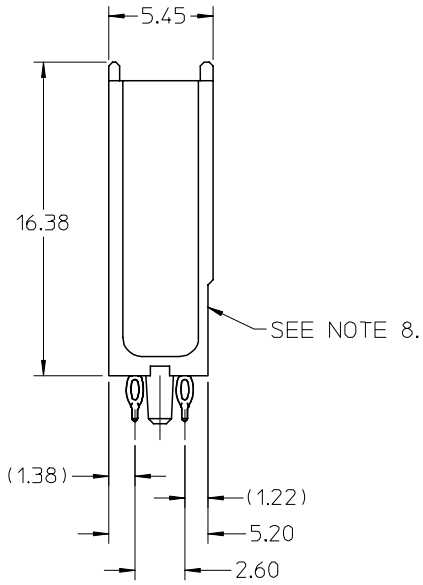

NOTES:

1. MATERIALS: HOUSING - LIQUID CRYSTAL POLYMER (LCP), UL 94V-0, GRAY; CONTACT - COPPER ALLOY
2. FINISH: SELECT GOLD IN CONTACT AREA, 50 μ" THICK; TIN/LEAD OR MATTE TIN IN COMPLIANT AREA.
3. PACKAGING PER PK-70873-578.
4. CONTACTS IN EACH ROW HAVE THE SAME WIPE LENGTH.
5. BACKPLANE ASSEMBLY MATES WITH DAUGHTERCARD POWER MODULE 75292-2***.
6. PART SHOWN IS 75492-1067.
7. SEE OTHER SHEETS FOR ADDITIONAL NOTES.
8. WHEN INSERTING OPEN SIGNAL MODULES NEXT TO COLUMN 1 SIDE OF POWER MODULES, SIGNAL MODULES MUST BE INSERTED BEFORE THE POWERS TO AVOID INTERFERENCE BETWEEN THE TWO CONNECTOR HOUSINGS.
9. THESE PARTS CONFORM TO MOLEX PRODUCT SPECIFICATION PS-75221-999.
10. THESE PARTS CONFORM TO MOLEX COSMETIC SPECIFICATION PS-45499-002 CLASS B.

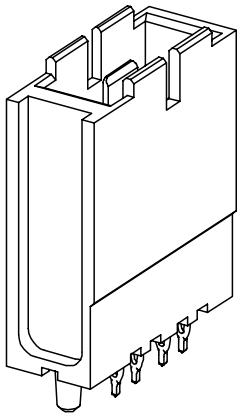

1-UP ASSEMBLY PART NUMBER

7 5 4 9 2 - 1 0 A B

- TIN/LEAD PLATED PRODUCT -
FOR EACH ROW LOCATION A, B:
4 = 4.5 mm
6 = 6.0 mm
7 = 7.5 mm
- LEAD-FREE PLATED PRODUCT -
FOR EACH ROW LOCATION A, B:
2 = 4.5 mm
3 = 6.0 mm
5 = 7.5 mm

SEE SHEET 4 FOR HOLE PATTERN LAYOUT

REV	DESCRIPTION
C	ADDED NOTES 9 & 10 EC NO: UCP2008-0426 DRWN:CSTEWART 2007/08/29 CH'KD:JBINGHAM 2007/08/30 APPR:JBINGHAM 2007/08/31

QUALITY SYMBOLS: ▼=0 ; (C)=0

GENERAL TOLERANCES (UNLESS SPECIFIED)	mm	INCH
4 PLACES	± ---	± ---
3 PLACES	± ---	± ---
2 PLACES	± ---	± ---
1 PLACE	± ---	± ---
ANGULAR ± 5 °		

DRAFT WHERE APPLICABLE MUST REMAIN WITHIN DIMENSIONS

DIMENSION STYLE: MM ONLY	SCALE: 4:1	DESIGN UNITS: METRIC
THIRD ANGLE PROJECTION		
DRAWN BY: ELO	DATE: 2005/07/01	TITLE: GBX 2 PAIR BACKPLANE POWER SALES ASSEMBLY
CHECKED BY: ELO	DATE: 2005/07/01	
APPROVED BY: BIXLER	DATE: 2005/07/06	MOLEX INCORPORATED
MATERIAL NO.: SEE CHART	DOCUMENT NO.: SD-75492-001	SHEET NO. 1 OF 4
SIZE: B		

THIS DRAWING CONTAINS INFORMATION THAT IS PROPRIETARY TO MOLEX INCORPORATED AND SHOULD NOT BE USED WITHOUT WRITTEN PERMISSION

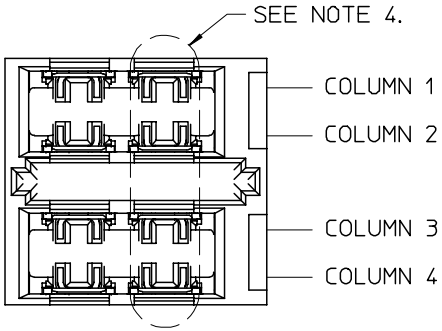

2-UP ASSEMBLY PART NUMBER

7 5 4 9 2 - 2 0 A B

- TIN/LEAD PLATED PRODUCT -
FOR EACH ROW LOCATION A, B:
4 = 4.5 mm
6 = 6.0 mm
7 = 7.5 mm
- LEAD-FREE PLATED PRODUCT -
FOR EACH ROW LOCATION A, B:
2 = 4.5 mm
3 = 6.0 mm
5 = 7.5 mm

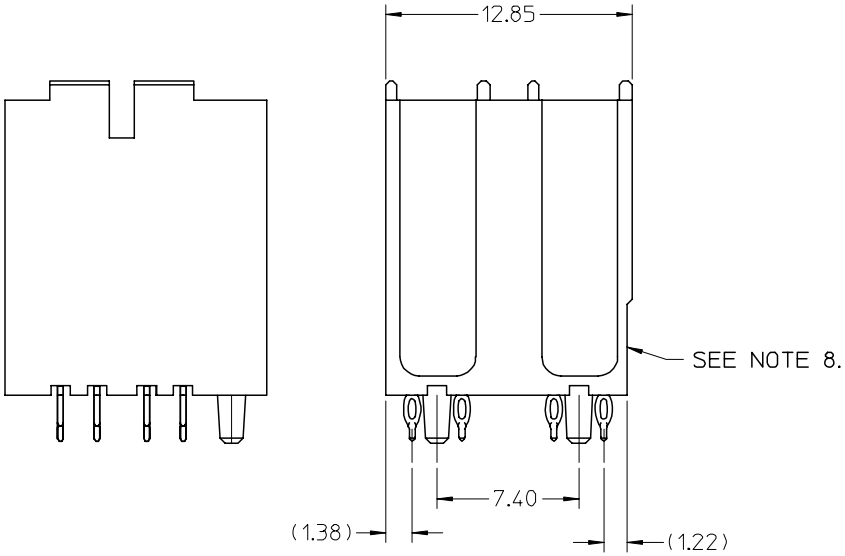

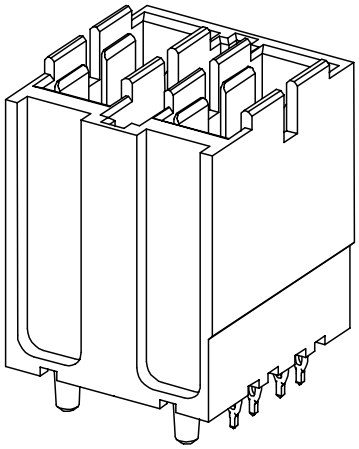

SEE SHEET 1 FOR ADDITIONAL INFORMATION
CHECK WITH PRODUCT MANAGER FOR AVAILABILITY

SEE SHEET ONE EC NO: UCP2008-0426 DRWN: CSTEWART 2007/08/29 CH'KD: JBINGHAM 2007/08/30 APPR: JBINGHAM 2007/08/31	DESCRIPTION REV	QUALITY SYMBOLS ▼=0 ▽=0	GENERAL TOLERANCES (UNLESS SPECIFIED) mm / INCH 4 PLACES ± --- / ± --- 3 PLACES ± --- / ± --- 2 PLACES ± --- / ± --- 1 PLACE ± --- / ± --- ANGULAR ± 5 ° DRAFT WHERE APPLICABLE MUST REMAIN WITHIN DIMENSIONS	DIMENSION STYLE MM ONLY DRAWN BY ELO DATE 2005/07/01 CHECKED BY ELO DATE 2005/07/01 APPROVED BY BIXLER DATE 2005/07/06 MATERIAL NO. SEE CHART	SCALE 4:1 DESIGN UNITS METRIC THIRD ANGLE PROJECTION TITLE GBX 2 PAIR BACKPLANE POWER SALES ASSEMBLY molex MOLEX INCORPORATED DOCUMENT NO. SD-75492-001 SHEET NO. 2 OF 4	SIZE B	THIS DRAWING CONTAINS INFORMATION THAT IS PROPRIETARY TO MOLEX INCORPORATED AND SHOULD NOT BE USED WITHOUT WRITTEN PERMISSION

tb_frame_B_P_AM_T
Rev. E 2006/04/15

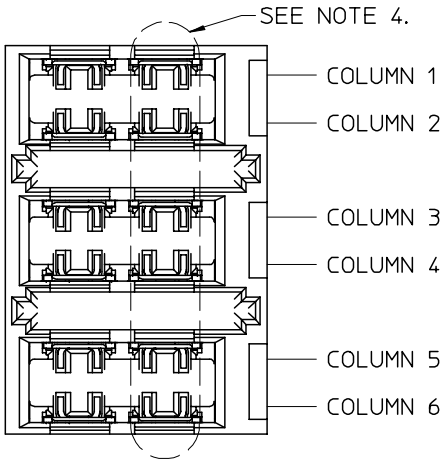

3-UP ASSEMBLY PART NUMBER

7 5 4 9 2 - 3 0 A B

- TIN/LEAD PLATED PRODUCT -
FOR EACH ROW LOCATION A, B:
4 = 4.5 mm
6 = 6.0 mm
7 = 7.5 mm
- LEAD-FREE PLATED PRODUCT -
FOR EACH ROW LOCATION A, B:
2 = 4.5 mm
3 = 6.0 mm
5 = 7.5 mm

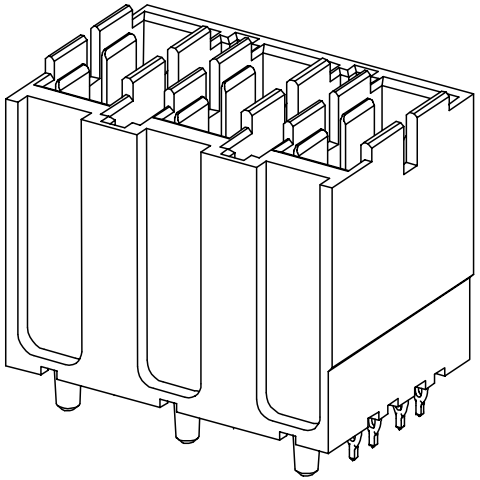

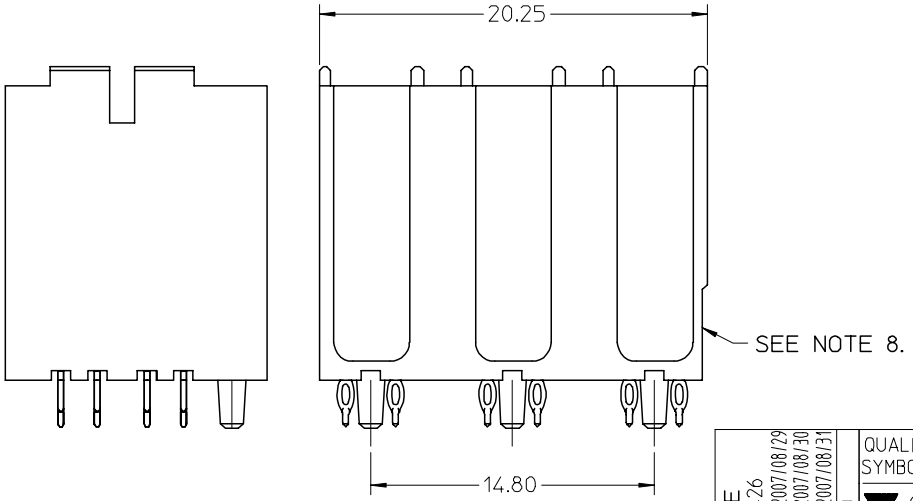

SEE SHEET 1 FOR ADDITIONAL INFORMATION
CHECK WITH PRODUCT MANAGER FOR AVAILABILITY

SEE SHEET ONE EC NO: UCP2008-0426 DRWN: CSTEWART 2007/08/29 CH'KD: JBINGHAM 2007/08/30 APPR: JBINGHAM 2007/08/31	DESCRIPTION	QUALITY SYMBOLS ▼=0 ▽=0	GENERAL TOLERANCES (UNLESS SPECIFIED) mm / INCH 4 PLACES ± --- / ± --- 3 PLACES ± --- / ± --- 2 PLACES ± --- / ± --- 1 PLACE ± --- / ± --- ANGULAR ± 5 ° DRAFT WHERE APPLICABLE MUST REMAIN WITHIN DIMENSIONS	DIMENSION STYLE: MM ONLY DRAWN BY: ELO DATE: 2005/07/01 CHECKED BY: ELO DATE: 2005/07/01 APPROVED BY: BIXLER DATE: 2005/07/06 MATERIAL NO.: SEE CHART	SCALE: 4:1 DESIGN UNITS: METRIC THIRD ANGLE PROJECTION TITLE: GBX 2 PAIR BACKPLANE POWER SALES ASSEMBLY molex MOLEX INCORPORATED DOCUMENT NO.: SD-75492-001 SHEET NO. 3 OF 4	REV

SIZE B

THIS DRAWING CONTAINS INFORMATION THAT IS PROPRIETARY TO MOLEX INCORPORATED AND SHOULD NOT BE USED WITHOUT WRITTEN PERMISSION

HOLE PATTERN FOR 1-UP ASSEMBLY

1.) ADD 7.40 FROM CENTERLINES OF PEG FOR MULTIPLE UP ASSEMBLIES
2.) USE 5.55 FROM CENTERLINE TO CENTERLINE OF PEG FOR INDIVIDUAL POWER MODULES STACKED NEXT TO EACH OTHER.

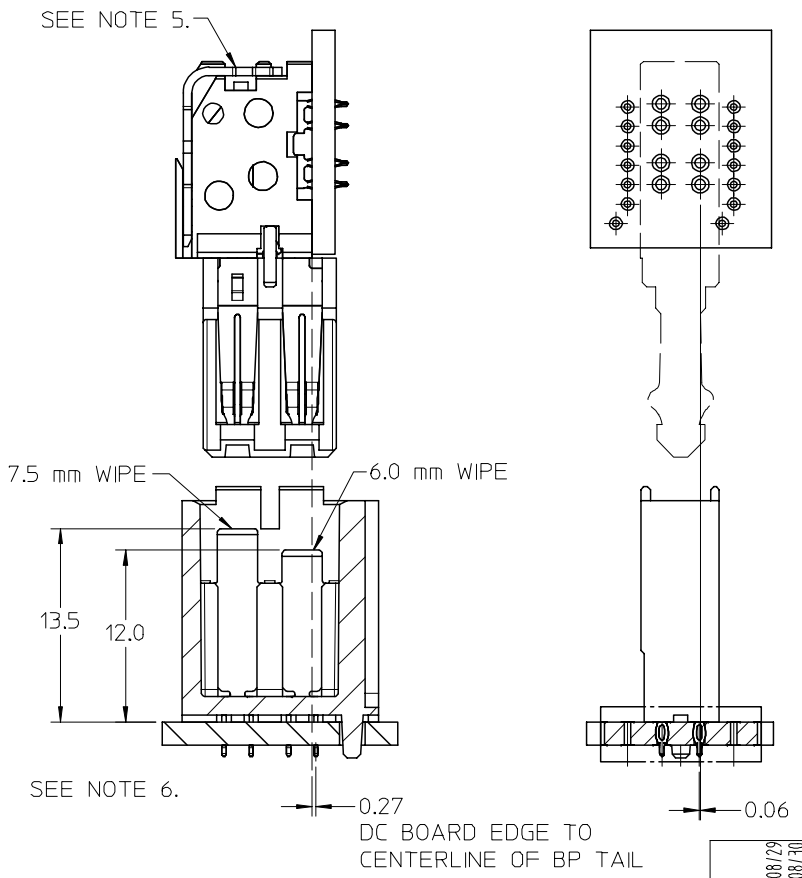

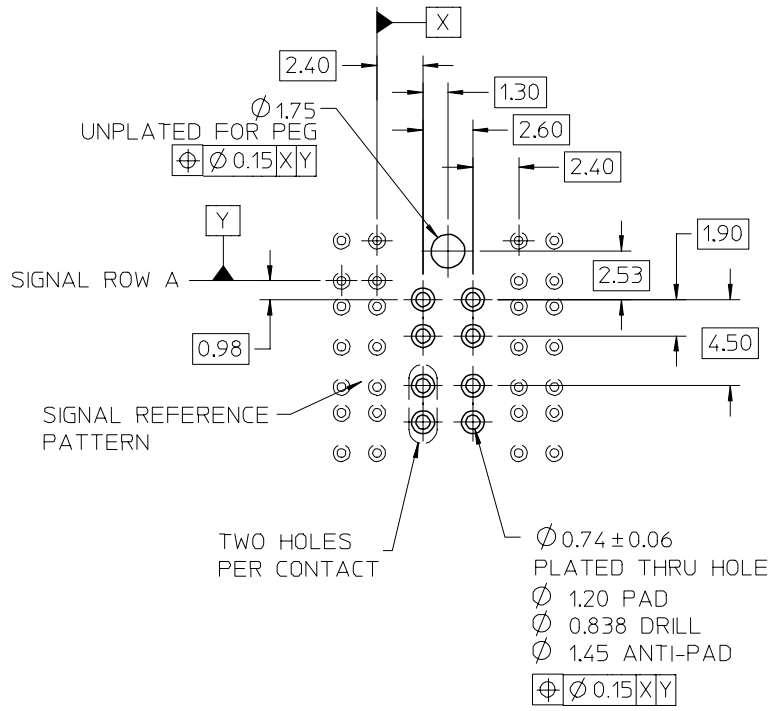

SEE SHEET ONE	EC NO: UCP2008-0426	DRWN: CSTEWART	2007/08/29
		CH'KD: JBINGHAM	2007/08/30
		APPR: JBINGHAM	2007/08/31

DESCRIPTION / REV

QUALITY SYMBOLS: ▼=0 ; (C)=0

GENERAL TOLERANCES (UNLESS SPECIFIED)

	mm	INCH
4 PLACES	± ---	± ---
3 PLACES	± ---	± ---
2 PLACES	± ---	± ---
1 PLACE	± ---	± ---
ANGULAR ± 5 °		

DRAFT WHERE APPLICABLE MUST REMAIN WITHIN DIMENSIONS

DIMENSION STYLE: MM ONLY

DRAWN BY	ELO	DATE 2005/07/01
CHECKED BY	ELO	DATE 2005/07/01
APPROVED BY	BIXLER	DATE 2005/07/06

MATERIAL NO.: SEE PREVIOUS

SCALE: 4:1

DESIGN UNITS: METRIC

THIRD ANGLE PROJECTION

TITLE: GBX 2 PAIR BACKPLANE POWER SALES ASSEMBLY

molex MOLEX INCORPORATED

DOCUMENT NO.: SD-75492-001

SHEET NO. 4 OF 4

SIZE B

THIS DRAWING CONTAINS INFORMATION THAT IS PROPRIETARY TO MOLEX INCORPORATED AND SHOULD NOT BE USED WITHOUT WRITTEN PERMISSION

Компания «ЭлектроПласт» предлагает заключение долгосрочных отношений при поставках импортных электронных компонентов на взаимовыгодных условиях!

Наши преимущества:

- Оперативные поставки широкого спектра электронных компонентов отечественного и импортного производства напрямую от производителей и с крупнейших мировых складов;
- Поставка более 17-ти миллионов наименований электронных компонентов;
- Поставка сложных, дефицитных, либо снятых с производства позиций;
- Оперативные сроки поставки под заказ (от 5 рабочих дней);
- Экспресс доставка в любую точку России;
- Техническая поддержка проекта, помощь в подборе аналогов, поставка прототипов;
- Система менеджмента качества сертифицирована по Международному стандарту ISO 9001;
- Лицензия ФСБ на осуществление работ с использованием сведений, составляющих государственную тайну;
- Поставка специализированных компонентов (Xilinx, Altera, Analog Devices, Intersil, Interpoint, Microsemi, Aeroflex, Peregrine, Syfer, Eurofarad, Texas Instrument, Miteq, Cobham, E2V, MA-COM, Hittite, Mini-Circuits,General Dynamics и др.);

Помимо этого, одним из направлений компании «ЭлектроПласт» является направление «Источники питания». Мы предлагаем Вам помощь Конструкторского отдела:

- Подбор оптимального решения, техническое обоснование при выборе компонента;
- Подбор аналогов;
- Консультации по применению компонента;
- Поставка образцов и прототипов;
- Техническая поддержка проекта;
- Защита от снятия компонента с производства.

Как с нами связаться

Телефон: 8 (812) 309 58 32 (многоканальный)
Факс: 8 (812) 320-02-42
Электронная почта: org@eplast1.ru
Адрес: 198099, г. Санкт-Петербург, ул. Калинина, дом 2, корпус 4, литера А.