DS1869
3V Dallastat™ Electronic Digital Rheostat

www.dalsemi.com

FEATURES

- Replaces mechanical variable resistors
- Operates from 3V or 5V supplies
- Electronic interface provided for digital as well as manual control
- Internal pull-ups with debounce for easy interfacing to mechanical push buttons
- Wiper position is maintained in the absence of power
- Low cost alternative to mechanical controls
- Applications include volume, tone, contrast, brightness, and dimmer control
- 8-pin SOIC and 8-pin DIP packages are available
- Standard resistance values for Dallastat
  - DS1869-10 ~ 10 kΩ
  - DS1869-50 ~ 50 kΩ
  - DS1869-100 ~ 100 kΩ
- Operating temperature range:
  - Industrial: -40°C to +85°C
- 3V to 8V differential supply operational range

PIN ASSIGNMENT

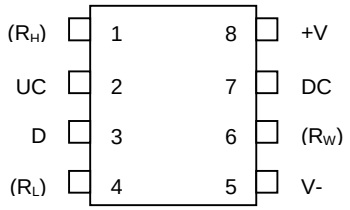

8-Pin DIP (300-mil)
See Mech. Drawings Section

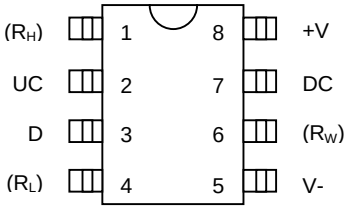

8-Pin SOIC (208-mil)
See Mech. Drawings Section

PIN DESCRIPTION

R_H	- High Terminal of Potentiometer
R_W	- Wiper Terminal of Potentiometer
R_L	- Low Terminal of Potentiometer
-V, +V	- Voltage Supply Inputs
UC	- Up Contact Input
D	- Digital Input
DC	- Down Contact Input

DESCRIPTION

The DS1869 Dallastat™ is a digital rheostat or potentiometer. This device provides 64 possible uniform tap points over the entire resistive range. The standard resistive ranges are 10 kΩ, 50 kΩ, and 100 kΩ. The Dallastat can be controlled by either a switch contact closure input or a digital source input such as a CPU. The DS1869 operates from 3V or 5V supplies. Wiper position is maintained in the absence of power through the use of a EEPROM memory cell array. The EEPROM cell array will withstand more than 50,000 writes.

The DS1869 is offered in two standard IC packages which include an 8-pin 300-mil DIP and an 8-pin 208-mil SOIC. The DS1869 can be configured to operate using a single pushbutton, dual pushbutton or digital source input by varying power-on conditions. This is illustrated in Figures 1 and 2. The DS1869 pinouts allow access to both ends of the potentiometer R_L, R_H, and the wiper, R_W. Control inputs include the digital source input, D, the up contact input, UC, and the down contact input, DC. Other pins include the positive, +V, and negative, -V, supply inputs. The DS1869 is specified to operate from -40°C to +85°C.

OPERATION

The DS1869 can be configured to operate from a single contact closure, dual contact closure, or a digital source input. Figures 1 and 2 illustrate both contact closure configurations. Contact closure is defined as a transition from a high level to a low level on the up contact (UC) or down contact (DC) inputs. All three control inputs are active when in a low state and are inactive when in a high state.

The DS1869 interprets input pulse widths as the means of controlling wiper movement. A single pulse input on the UC, DC, or D input terminals will cause the wiper position to move $1/64^{th}$ of the total resistance. A transition from a high to low on these inputs is considered the beginning of pulse activity or contact closure. A single pulse must be greater than 1 ms but lasting no longer than 1 second. Pulse timings are shown in Figure 5.

Repetitive pulsed inputs can be used to step through each resistive position of the device in a relatively fast manner (see Figure 5b). The requirement for repetitive pulsed inputs is that pulses must be separated by a minimum time of 1 ms. If the input is not allowed to be inactive (high) for at least 1 ms, the DS1869 will interpret repetitive pulses as a single pulse.

Pulse inputs lasting longer than 1 second will cause the wiper to move one position every 100 ms following the initial 1-second hold time. The total time to transcend the entire potentiometer using a continuous input pulse is given by the formula below:

$$\approx 1 \text{ second} + 63 \text{ X } 100 \text{ ms} = 7.3 \text{ (seconds)}$$

Single contact closure operation allows the user to control wiper movement in either direction from a single pushbutton input. Figure 1 presents a typical single pushbutton configuration. The UC input is used to increment and decrement wiper position for single pushbutton mode of operation. The DC input provides no functionality in this mode but must be connected to the positive supply voltage (V_{CC}). The digital source input (D) can be allowed to float.

On device power-up, the configuration shown in Figure 1 must exist in order to enter the single contact closure mode of operation—especially and specifically, the (DC) input's direct connection to the positive supply voltage (V_{CC}).

The initial direction of wiper movement in single pushbutton operation is determined by prior activity. The initial direction of wiper movement will be opposite to that of the previous activity. Changing the direction of wiper movement in single pushbutton mode is accomplished by allowing a period of inactivity on the UC input of (greater than) 1 second, or by moving the wiper to the end of the potentiometer range. This will occur regardless of whether the input is a continuous pulse, a sequence of repetitive pulses or a single pulse.

The digital source input, D, was designed for microprocessor or controlled applications. This control input manipulates the device in the same manner as the single pushbutton configuration, controlling movement of the wiper position in both upward and downward directions. One added feature over the single pushbutton configuration is the ability to increment or decrement wiper position at a faster rate. Digital source input control is available regardless of the type of pushbutton configuration.

Dual pushbutton mode of operation is entered when the DC input is floated on power-up. If interfacing contact closure control inputs to digital logic, the DC input must be interfaced to an open drain drive which is high impedance during power-up; see Figure 2B. This will prevent the device from entering a single pushbutton mode of operation.

In dual pushbutton mode, each direction is controlled by the up contact (UC) and down contact (DC) inputs, respectively. No wait states are required to change wiper direction in dual pushbutton mode. In dual pushbutton mode, as the wiper position reaches the end of the potentiometer, the direction of wiper movement will not change. Wiper position will remain at the potentiometers' end until an opposite direction input is given.

All contact closure control inputs, UC, DC, and D, are internally pulled-up by a 100 kΩ resistance. The UC and DC inputs are internally debounced and require no external components for input signal conditioning.

DS1869 SINGLE PUSHBUTTON CONFIGURATION (TYPICAL EXAMPLE) Figure 1

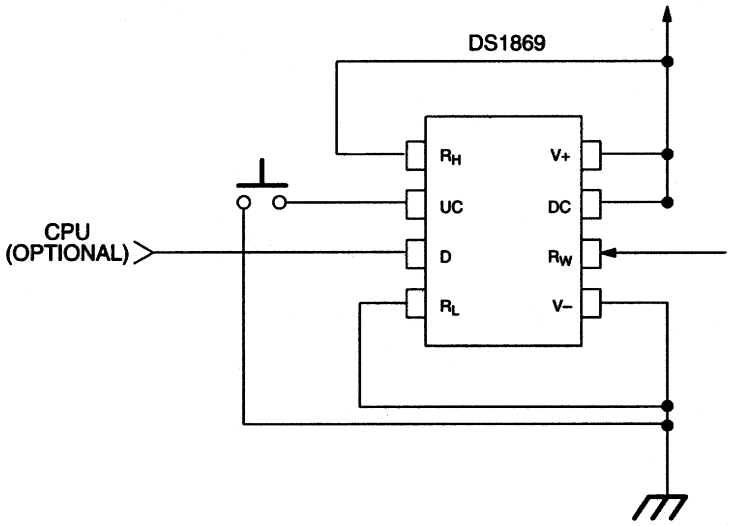

DS1869 DUAL PUSHBUTTON CONFIGURATION (TYPICAL EXAMPLE) Figure 2A

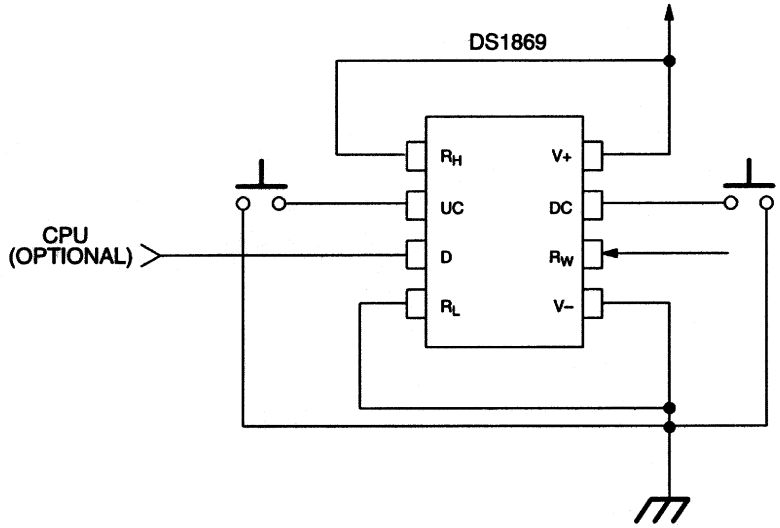

DS1869 DUAL PORT CONFIGURATION (TYPICAL EXAMPLE) Figure 2B

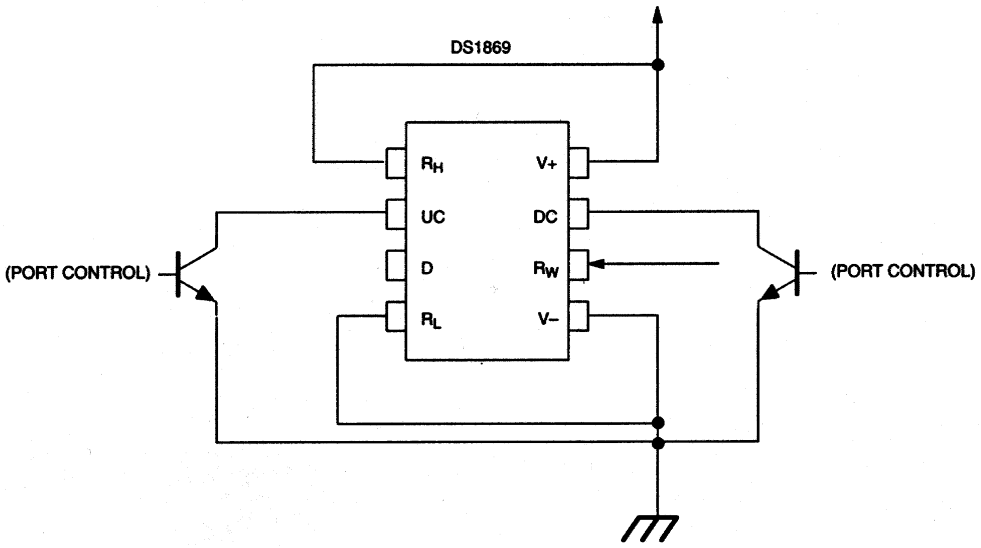

The DS1869 is provided with two supply inputs -V and +V. The maximum voltage difference between the two supply inputs is +8.0 volts. The minimum voltage difference is +2.7 volts. All input levels are referenced to the negative supply input, -V. The voltage applied to any Dallastat terminal must not exceed the negative supply voltage (-V) by -0.5 or the positive supply voltage (+V) by +0.5 volts. The minimum logic high level must be +2.4 volts with reference to the -V supply voltage input for +V=5V. A logic low level with reference to the -V supply voltage has a maximum value of +0.8 volts. Dallastats exhibit a typical wiper resistance of 400 ohms with a maximum wiper resistance of 1000 ohms. The maximum wiper current allowed through the Dallastat is specified at 1 milliamps (see DC Electrical Characteristics).

NONVOLATILE WIPER SETTINGS

Dallastats maintain the position of the wiper in the absence of power. This feature is provided through the use of EEPROM type memory cell arrays. During normal operation the position of the wiper is determined by the input multiplexer. Periodically, the multiplexer will update the EEPROM memory cells. The manner in which an update occurs has been optimized for reliability, durability, and performance. Additionally, the update operation is totally transparent to the user.

When power is applied to the Dallastat, the wiper setting will be the last recorded in the EEPROM memory cells. If the Dallastat setting is changed after power is applied, the new value will be stored after a delay of 2 seconds. The initial storage of a new value after power-up occurs when the first change is made, regardless of when this change is made.

After the initial change on power-up all subsequent changes of the wiper position will be recorded only if the 4th LSB (out of a 6-bit total for 64 positions) is being changed. Thus any change greater than 12.5% of the total resistance range will trigger one EEPROM write cycle.

Changes or storage to the EEPROM memory cells must allow for a 2-second delay to guarantee that updates will occur. The EEPROM memory cells are specified to accept greater that 50,000 writes before a wear-out condition. If the EEPROM memory cells do reach a wear-out condition, the Dallastat will still function properly while power is applied. However, on power-up the device's wiper position will be that of the position last recorded before memory cell wear-out.

FLOWCHART: ONE-BUTTON OPERATION AND ELECTRICAL CONTROL Figure 3

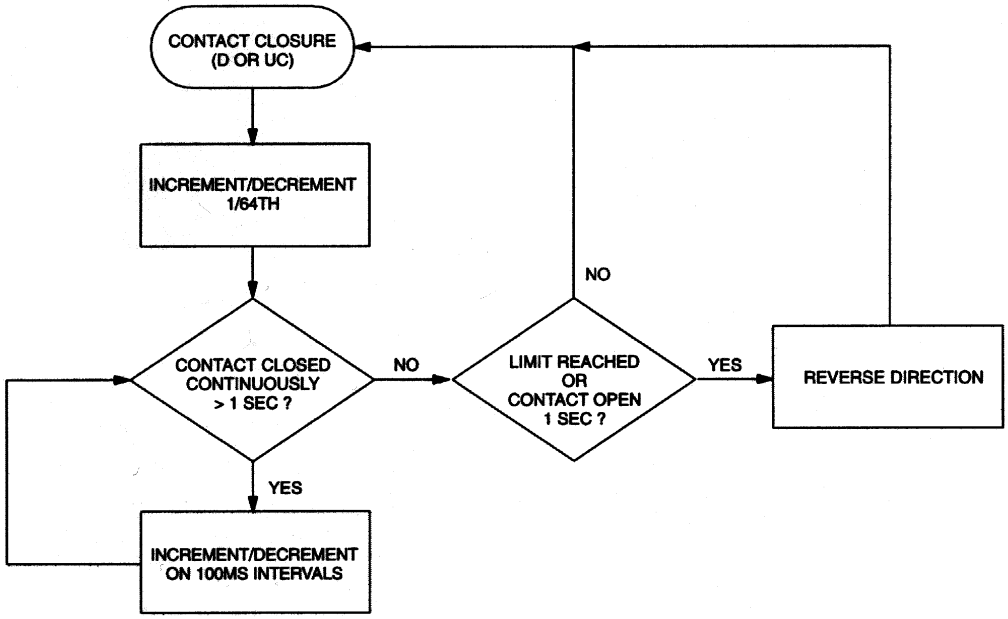

CONTACT OPEN AND CONTACT CLOSURE TIMING IS 1 SECOND ± 15%

FLOWCHART: TWO-BUTTON OPERATION Figure 4

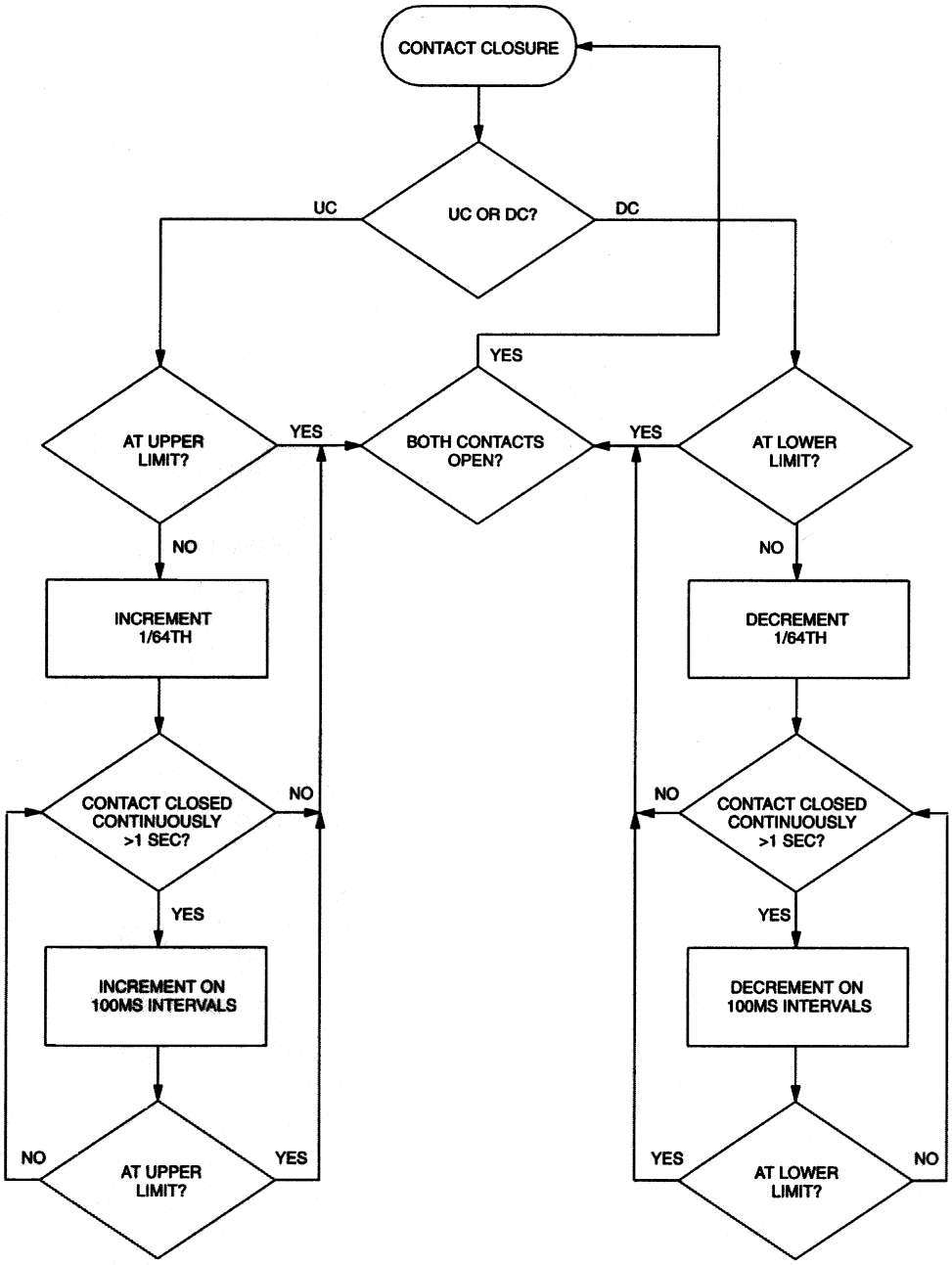

CONTACT OPEN AND CONTACT CLOSURE TIMING IS 1 SECOND ± 15%

ABSOLUTE MAXIMUM RATINGS*

Voltage on Any Pin Relative to -V	-V -0.5V +8.0V
Operating Temperature	-40°C to +85°C
Storage Temperature	-55°C to +125°C
Soldering Temperature	260°C for 10 seconds

* This is a stress rating only and functional operation of the device at these or any other conditions above those indicated in the operation sections of this specification is not implied. Exposure to absolute maximum rating conditions for extended periods of time may affect reliability.

RECOMMENDED DC OPERATING CONDITIONS (-40°C to +85°C)

PARAMETER	SYMBOL	MIN	TYP	MAX	UNITS	NOTES
+ Supply Voltage	+V	-V + 2.7		-V + 8.0	V	
- Supply Voltage	-V	+V - 8.0		+V - 2.7	V	
Resistor Inputs	R_H,R_W,R_L	-V - 0.5		+V + 0.5	V	
Logic Input 1	V_{IH}	+2.4			V	1, 2, 10
Logic Input 0	V_{IL}			+0.8	V	1, 2, 10
Wiper Current	I_W			1	mA	5

DC ELECTRICAL CHARACTERISTICS

(-40°C to +85°C; -V to +V = 2.7V to 8.0V)

PARAMETER	SYMBOL	MIN	TYP	MAX	UNITS	NOTES
End to End Resistor Tolerance		-20		20	%	11
+, - Supply Current	I_{CC1}		1	2	mA	3
Supply Current, Idle State At 3.3V At 8.0V	I_{CC2}			 2 10	µA	9
Wiper Resistance	R_W		400	1000	Ω	
Temperature Coefficient			750		ppm/°C	

AC ELECTRICAL CHARACTERISTICS

(-40°C to +85°C; -V to +V = 2.7V to 8.0V)

PARAMETER	SYMBOL	MIN	TYP	MAX	UNITS	NOTES
Input Pulse Width (D-input)	t_{PW}	1		DC	µs	1, 7, 8
Contact Pulse Width (UC, DC inputs)	t_{CPW}	1		DC	ms	1, 7, 8
Capacitance	C_{IN}		5	10	pF	6
Repetitive Input Pulse High Time	t_{HPW}	1		DC	ms	1, 7, 8
Continuous Input Pulse	t_{CCP}	1		DC	s	1, 7, 8

TIMING DIAGRAMS Figure 5

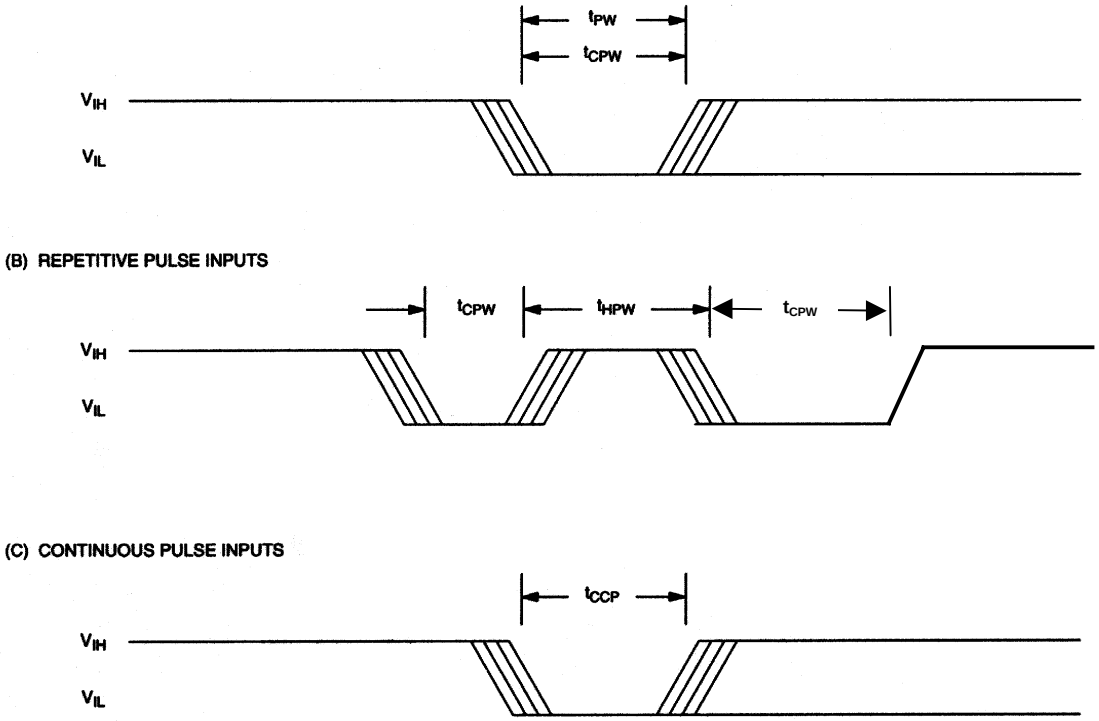

NOTES:

1. All inputs; UC, DC, and D are internally pulled up with a typical resistance of 100 kΩ.
2. Input logic levels are referenced to -V.
3. I_{CC} is the internal current that flows between -V and +V.
4. Input leakage applies to contact inputs UC and DC and the digital input (D).
5. Wiper current is the maximum current which can flow through the wipers.
6. Capacitance values apply at 25°C.
7. Input pulse width is the minimum time required for an input to cause an increment or decrement. If the UC, DC, or D input is held active for longer than 1 second, subsequent increments or decrements will occur on 100 ms intervals until the inputs UC, DC, and/or D is released to V_{IH}.
8. Repetitive pulsed inputs on UC, DC, or D will be recognized as long as the pulse repetition occurs within 1 second of each other. Pulses occurring faster than 1 ms apart may not be recognized as individual inputs but can be interpreted a constant input. Tolerance for pulse timing is ±15% on minimum inputs.
9. Idle state supply current is measured with no pushbutton pressed and with the wiper R_W tied to a CMOS load.
10. For +V referenced to -V = 5V.
11. Valid at 25°C only.

Компания «ЭлектроПласт» предлагает заключение долгосрочных отношений при поставках импортных электронных компонентов на взаимовыгодных условиях!

Наши преимущества:

- Оперативные поставки широкого спектра электронных компонентов отечественного и импортного производства напрямую от производителей и с крупнейших мировых складов;
- Поставка более 17-ти миллионов наименований электронных компонентов;
- Поставка сложных, дефицитных, либо снятых с производства позиций;
- Оперативные сроки поставки под заказ (от 5 рабочих дней);
- Экспресс доставка в любую точку России;
- Техническая поддержка проекта, помощь в подборе аналогов, поставка прототипов;
- Система менеджмента качества сертифицирована по Международному стандарту ISO 9001;
- Лицензия ФСБ на осуществление работ с использованием сведений, составляющих государственную тайну;
- Поставка специализированных компонентов (Xilinx, Altera, Analog Devices, Intersil, Interpoint, Microsemi, Aeroflex, Peregrine, Syfer, Eurofarad, Texas Instrument, Miteq, Cobham, E2V, MA-COM, Hittite, Mini-Circuits,General Dynamics и др.);

Помимо этого, одним из направлений компании «ЭлектроПласт» является направление «Источники питания». Мы предлагаем Вам помощь Конструкторского отдела:

- Подбор оптимального решения, техническое обоснование при выборе компонента;
- Подбор аналогов;
- Консультации по применению компонента;
- Поставка образцов и прототипов;
- Техническая поддержка проекта;
- Защита от снятия компонента с производства.

Как с нами связаться

Телефон: 8 (812) 309 58 32 (многоканальный)
Факс: 8 (812) 320-02-42
Электронная почта: org@eplast1.ru
Адрес: 198099, г. Санкт-Петербург, ул. Калинина, дом 2, корпус 4, литера А.