GM1117

1A LOW DROPOUT PRECISION VOLTAGE REGULATOR

Description

The GM1117 is a positive low dropout regulator and is available in an adjustable version and fixed output voltage from 1.5V to 5.0V. All internal circuitry is designed to operate down to 800mV input to output differential and the dropout voltage is fully specified as a function of load current. On chip trimming adjusts the reference/output voltage to within ± 1%. Current limit is also trimmed in order to minimize the stress on both the regulator and the power source circuitry under overloaded conditions.

Features

- **Adjustable or Fixed Output**
- **Output Current of 1.0A**
- **Dropout Voltage 1.5V max @ 1.0A**
- **Line Regulation 0.2% max.**
- **Load Regulation 0.4% max.**
- **Fast Transient Response**
- **Current Limit Protection**
- **Thermal Shutdown Protection**

Application

High Efficiency Linear Regulators

Post Regulators for Switching Supplies

Microprocessor Supply

Battery Powered Equipment

Reference Voltage Sources

Hard Drive Controllers

Battery Chargers

Adjustable Power Supply

Typical Application Circuits

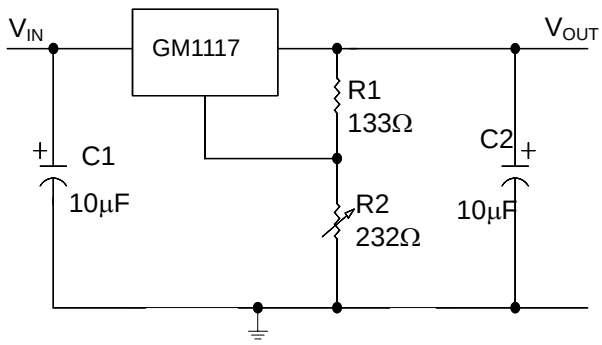

Adjustable Regulator

$$V_{OUT} = 1.25V \left(1 + \frac{R2}{R1}\right)$$

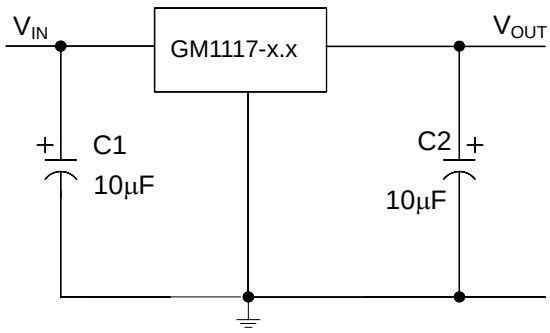

Fixed Output Voltage Regulator

Marking Information and Pin Configurations (Top View)

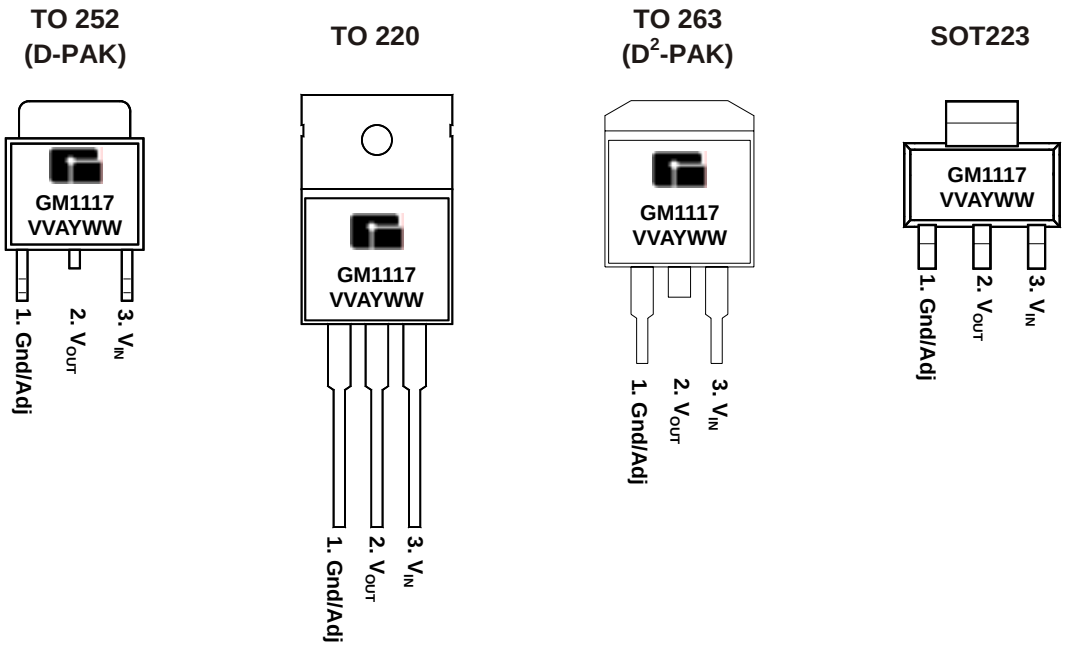

VV: Voltage suffix (15 = 1.5V, 50 = 5.0V…A = Adj)
A: Assembly / Test site code
Y: Year
WW: Week

Ordering Information

Ordering Number	Output Voltage	Package	Shipping
GM1117-AST3T	Adj	SOT-223	80 Units/Tube
GM1117-AST3R		SOT-223	2,500 Units / Tape & Reel
GM1117-ATC3T		TO-252	80 Units/Tube
GM1117-ATC3R		TO-252	2,500 Units / Tape & Reel
GM1117-ATB3T		TO-220	50 Units/Tube
GM1117-ATA3T		TO-263	50 Units/Tube
GM1117-ATA3R		TO-263	800 Units / Tape & Reel
GM1117-1.5ST3T	1.5V	SOT-223	80 Units/Tube
GM1117-1.5ST3R		SOT-223	2,500 Units / Tape & Reel
GM1117-1.5TC3T		TO-252	80 Units/Tube
GM1117-1.5TC3R		TO-252	2,500 Units / Tape & Reel
GM1117-1.5TB3T		TO-220	50 Units/Tube
GM1117-1.5TA3T		TO-263	50 Units/Tube
GM1117-1.5TA3R		TO-263	800 Units / Tape & Reel
GM1117-1.8ST3T	1.8V	SOT-223	80 Units/Tube
GM1117-1.8ST3R		SOT-223	2,500 Units / Tape & Reel
GM1117-1.8TC3T		TO-252	80 Units/Tube
GM1117-1.8TC3R		TO-252	2,500 Units / Tape & Reel
GM1117-1.8TB3T		TO-220	50 Units/Tube
GM1117-1.8TA3T		TO-263	50 Units/Tube
GM1117-1.8TA3R		TO-263	800 Units / Tape & Reel
GM1117-2.5ST3T	2.5V	SOT-223	80 Units/Tube
GM1117-2.5ST3R		SOT-223	2,500 Units / Tape & Reel
GM1117-2.5TC3T		TO-252	80 Units/Tube
GM1117-2.5TC3R		TO-252	2,500 Units / Tape & Reel
GM1117-2.5TB3T		TO-220	50 Units/Tube
GM1117-2.5TA3T		TO-263	50 Units/Tube
GM1117-2.5TA3R		TO-263	800 Units / Tape & Reel

Ordering Information (Continued)

Ordering Number	Output Voltage	Package	Shipping
GM1117-2.85ST3T	2.85V	SOT-223	80 Units/Tube
GM1117-2.85ST3R		SOT-223	2,500 Units / Tape & Reel
GM1117-2.85TC3T		TO-252	80 Units/Tube
GM1117-2.85TC3R		TO-252	2,500 Units / Tape & Reel
GM1117-2.85TB3T		TO-220	50 Units/Tube
GM1117-2.85TA3T		TO-263	50 Units/Tube
GM1117-2.85TA3R		TO-263	800 Units / Tape & Reel
GM1117-3.0ST3T	3.0V	SOT-223	80 Units/Tube
GM1117-3.0ST3R		SOT-223	2,500 Units / Tape & Reel
GM1117-3.0TC3T		TO-252	80 Units/Tube
GM1117-3.0TC3R		TO-252	2,500 Units / Tape & Reel
GM1117-3.0TB3T		TO-220	50 Units/Tube
GM1117-3.0TA3T		TO-263	50 Units/Tube
GM1117-3.0TA3R		TO-263	800 Units / Tape & Reel
GM1117-3.3ST3T	3.3V	SOT-223	80 Units/Tube
GM1117-3.3ST3R		SOT-223	2,500 Units / Tape & Reel
GM1117-3.3TC3T		TO-252	80 Units/Tube
GM1117-3.3TC3R		TO-252	2,500 Units / Tape & Reel
GM1117-3.3TB3T		TO-220	50 Units/Tube
GM1117-3.3TA3T		TO-263	50 Units/Tube
GM1117-3.3TA3R		TO-263	800 Units / Tape & Reel
GM1117-5.0ST3T	5.0V	SOT-223	80 Units/Tube
GM1117-5.0ST3R		SOT-223	2,500 Units / Tape & Reel
GM1117-5.0TC3T		TO-252	80 Units/Tube
GM1117-5.0TC3R		TO-252	2,500 Units / Tape & Reel
GM1117-5.0TB3T		TO-220	50 Units/Tube
GM1117-5.0TA3T		TO-263	50 Units/Tube
GM1117-5.0TA3R		TO-263	800 Units / Tape & Reel

Absolute Maximum Ratings

PARAMETER		SYMBOL	RATINGS	UNITS
Input Voltage		V_{IN}	7	V
Thermal Resistance, Junction to Case	SOT-223	θ_{JA}	15.0	℃/W
	TO-252 (D PAK)		6.0	
	TO-263 (D^2 PAK)		3.0	
Operating Junction Temperature	Control Section	T_J	0 to 125	℃
	Power Transistor		0 to 150	
Storage Temperature		T_{stg}	- 60 to 150	℃

Block Diagram

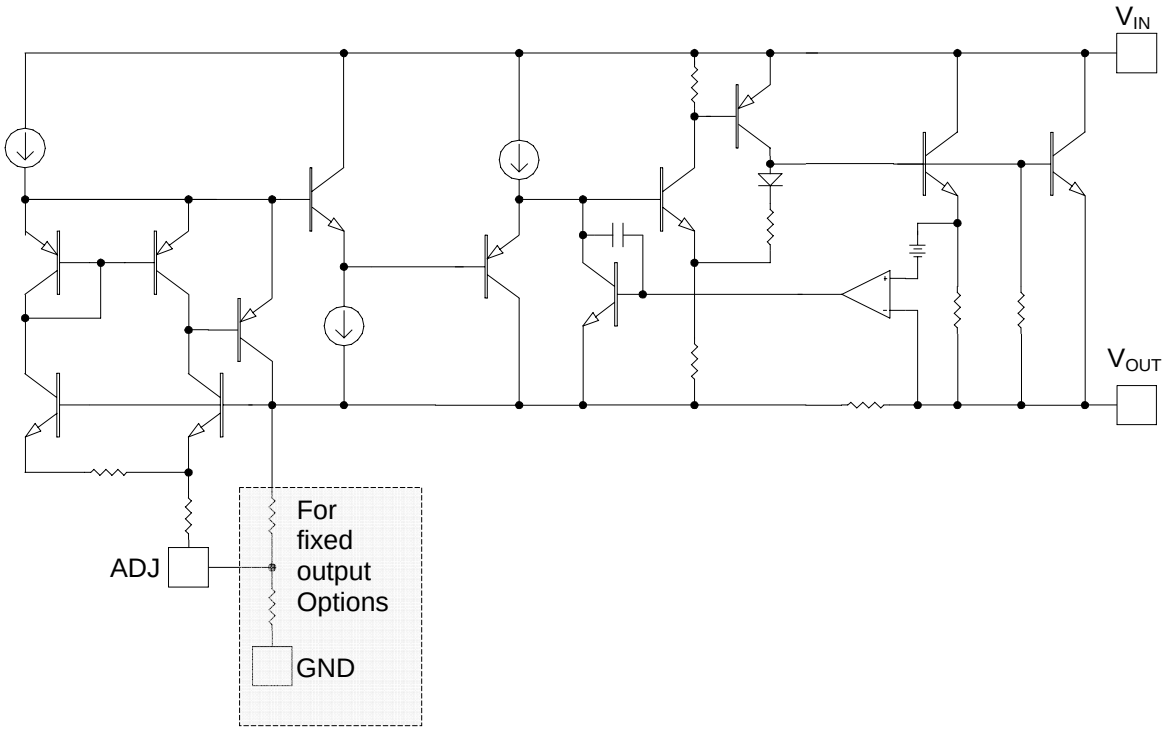

Electrical Characteristics (T_A = 25℃, unless otherwise noted)

Parameter		Symbol	Condition	Min	Typ	Max	Unit
Reference Voltage	GM1117-Adj	V_{REF}	I_{OUT} =10mA, V_{IN} = 5V	1.238	1.250	1.262	V
			10mA ≤ I_{OUT} ≤ 1.0A, 2.65V ≤ V_{IN} ≤ 10V	1.225	1.250	1.275	
Output Voltage	GM1117-1.8	V_{OUT}	I_{OUT} =10mA, V_{IN} = 3.3V	1.782	1.800	1.818	V
			10mA ≤ I_{OUT} ≤ 1.0A, 3.3V ≤ V_{IN} ≤ 10V	1.764	1.800	1.836	
	GM1117-2.5		I_{OUT} =10mA, V_{IN} = 4V	2.475	2.500	2.525	
			10mA ≤ I_{OUT} ≤ 1.0A, 4V ≤ V_{IN} ≤ 10V	2.450	2.500	2.550	
	GM1117-3.3		I_{OUT} =10mA, V_{IN} = 4.8V	3.267	3.300	3.333	
			10mA ≤ I_{OUT} ≤ 1.0A, 4.8V ≤ V_{IN} ≤ 10V	3.234	3.300	3.366	
	GM1117-5.0		I_{OUT} =10mA, V_{IN} = 6.5V	4.950	5.000	5.050	
			10mA ≤ I_{OUT} ≤ 1.0A, 6.5V ≤ V_{IN} ≤ 10V	4.900	5.000	5.100	
Line Regulation	GM1117-Adj	ΔV_{OI}	I_{OUT} =10mA, 2.75V ≤ V_{IN} ≤ 7V		0.04	0.2	%/V
	GM1117-1.8		I_{OUT} =10mA, 3.3V ≤ V_{IN} ≤ 7V				
	GM1117-2.5		I_{OUT} =10mA, 4V ≤ V_{IN} ≤ 7V				
	GM1117-3.3		I_{OUT} =10mA, 4.8V ≤ V_{IN} ≤ 7V				
	GM1117-5.0		I_{OUT} =10mA, 6.5V ≤ V_{IN} ≤ 7V				
Line Regulation		ΔV_{OL}	V_{IN} = V_{OUT} + 1V 10mA ≤ I_{OUT} ≤ 1.0A		0.2	0.4	%/mA
Dropout Voltage		ΔV	I_{OUT} =1A		1.15	1.3	V
Current Limit		I_{CL}	V_{IN} = V_{OUT} + 3V	1.1	3.1		A
Quiescent Current (Fixed Output Voltage Versions)		I_Q	V_{IN} = V_{OUT} + 1V 10mA ≤ I_{OUT} ≤ 1.0A		7	13	mA
Adjust Pin Current	GM1117-Adj	I_{Adj}	I_{OUT} =10mA, 2.75V ≤ V_{IN} ≤ 7V		55	90	μA
Temperature Coefficient			V_{IN} = V_{OUT} + 1.5V I_{OUT} = 10mA		0.005		%/℃
Thermal Regulation		T_C	T_A=25°C, 30ms pulse		0.003		%/W
Ripple Rejection		R_A	V_{IN} = V_{OUT} + 1.5V I_{OUT} = 10mA	60	72		dB

Typical Performance Characteristics

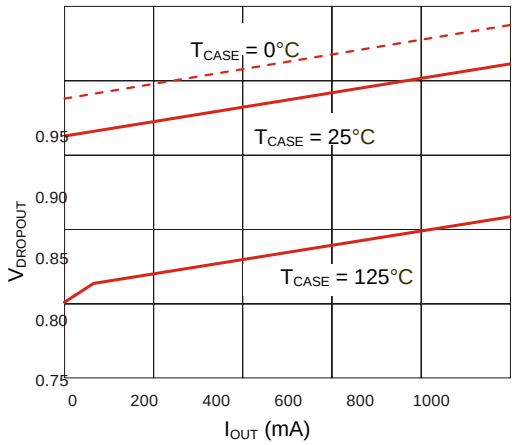

Figure 1. Dropout Voltage vs. Output Current

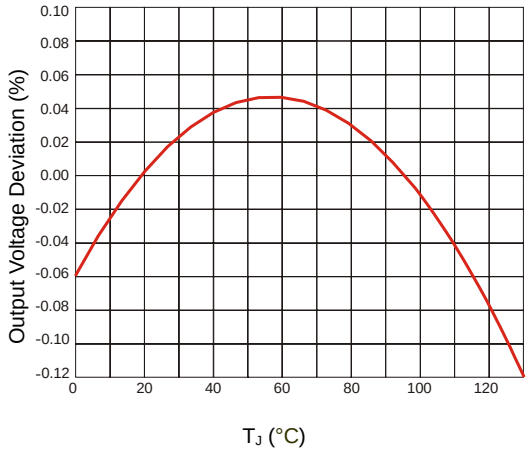

Figure 2. Reference Voltage vs. Temperature

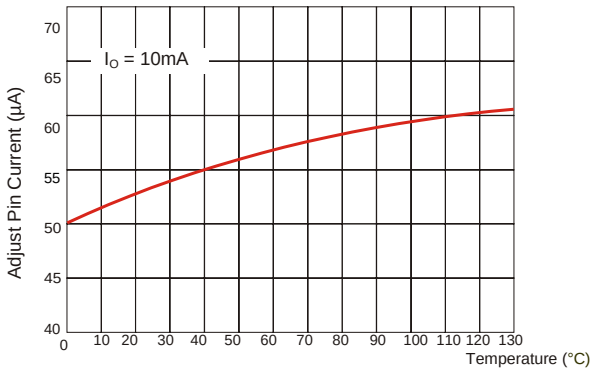

Figure 3. Adjust Pin Current vs. Temperature

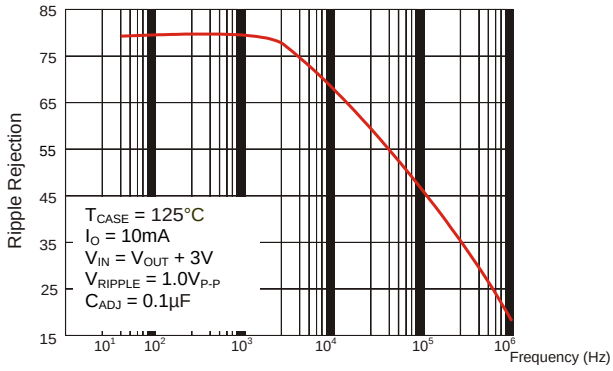

Figure 4. Ripple Rejection vs. Frequency

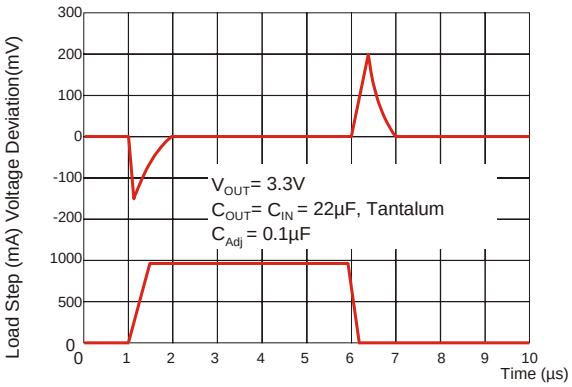

Figure 5. Transient Response

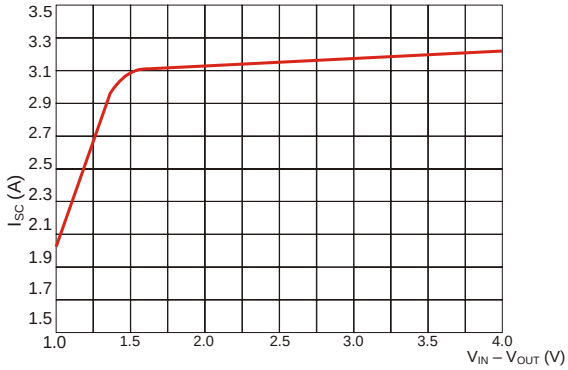

Figure 6. Short Circuit Current vs. V_{IN} -V_{OUT}

Package Outline Dimensions – SOT223

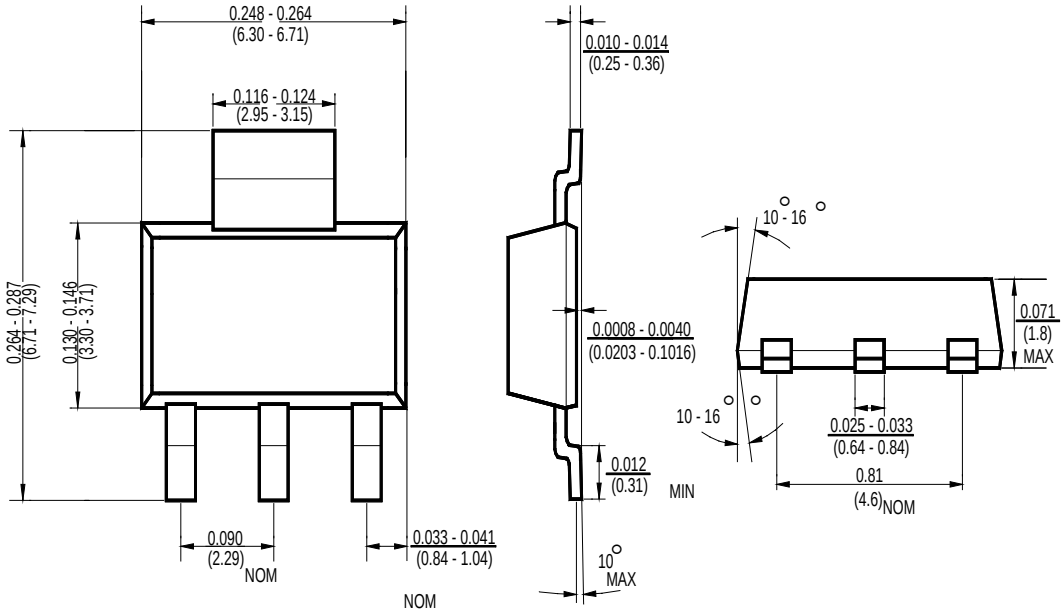

Package Outline Dimensions – TO252

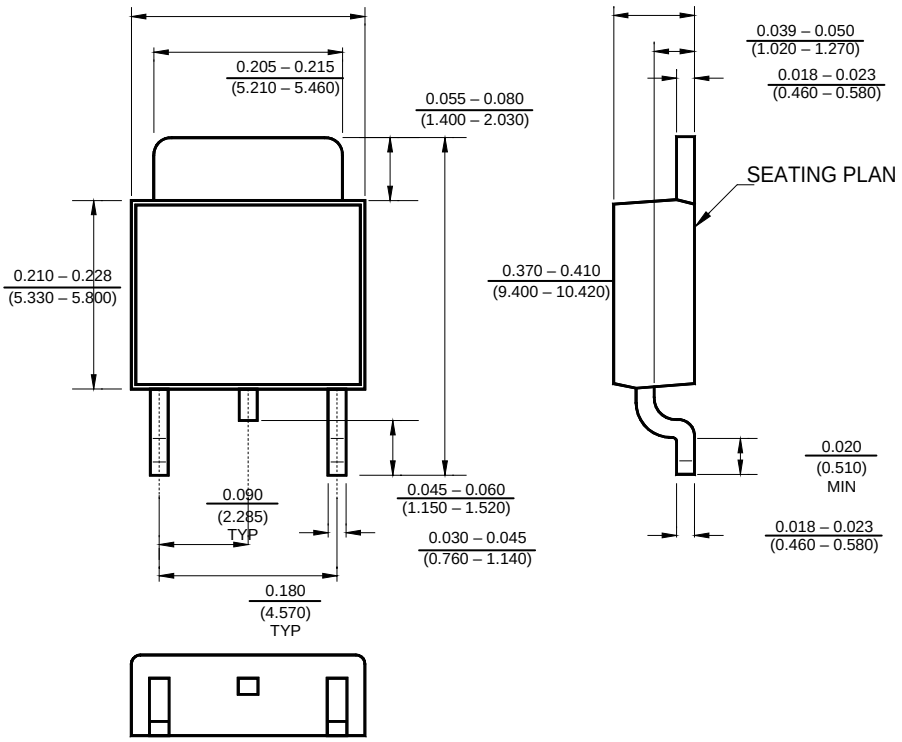

Package Outline Dimensions – TO263

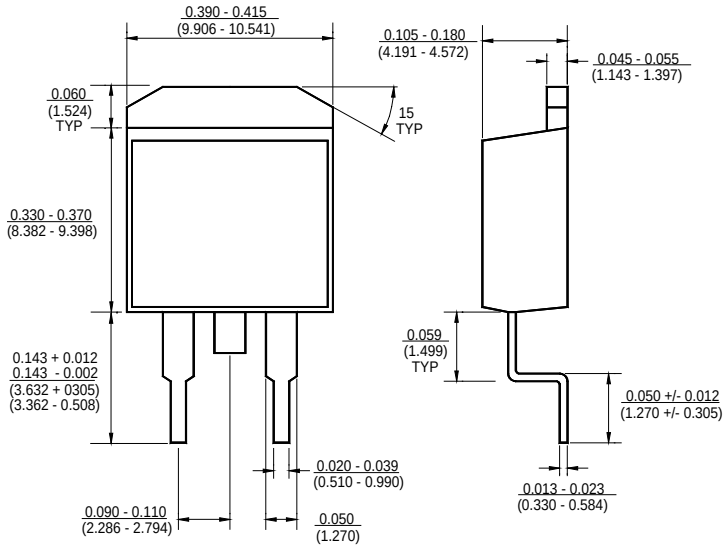

Ordering Number

GM	1117	A	ST3	R
APM Gamma Micro	Circuit Type	Output Voltage A: Adj 1.8 =1.8V 2.5 =2.5V 3.3 = 3.3V 5.0 =5.0V	Package Type ST3: SOT223 TA3: TO263 TB3: TO220 TC3: TO252	Shipping Type R: Taping & Reel T: Tube

Компания «ЭлектроПласт» предлагает заключение долгосрочных отношений при поставках импортных электронных компонентов на взаимовыгодных условиях!

Наши преимущества:

- Оперативные поставки широкого спектра электронных компонентов отечественного и импортного производства напрямую от производителей и с крупнейших мировых складов;
- Поставка более 17-ти миллионов наименований электронных компонентов;
- Поставка сложных, дефицитных, либо снятых с производства позиций;
- Оперативные сроки поставки под заказ (от 5 рабочих дней);
- Экспресс доставка в любую точку России;
- Техническая поддержка проекта, помощь в подборе аналогов, поставка прототипов;
- Система менеджмента качества сертифицирована по Международному стандарту ISO 9001;
- Лицензия ФСБ на осуществление работ с использованием сведений, составляющих государственную тайну;
- Поставка специализированных компонентов (Xilinx, Altera, Analog Devices, Intersil, Interpoint, Microsemi, Aeroflex, Peregrine, Syfer, Eurofarad, Texas Instrument, Miteq, Cobham, E2V, MA-COM, Hittite, Mini-Circuits,General Dynamics и др.);

Помимо этого, одним из направлений компании «ЭлектроПласт» является направление «Источники питания». Мы предлагаем Вам помощь Конструкторского отдела:

- Подбор оптимального решения, техническое обоснование при выборе компонента;
- Подбор аналогов;
- Консультации по применению компонента;
- Поставка образцов и прототипов;
- Техническая поддержка проекта;
- Защита от снятия компонента с производства.

Как с нами связаться

Телефон: 8 (812) 309 58 32 (многоканальный)
Факс: 8 (812) 320-02-42
Электронная почта: org@eplast1.ru
Адрес: 198099, г. Санкт-Петербург, ул. Калинина, дом 2, корпус 4, литера А.