THAT Corporation

Low-Noise, High Performance Audio Preamplifier IC

THAT 1510, 1512

FEATURES

- Low Noise:
  1 nV/√Hz input noise (60dB gain)
  34 nV/√Hz input noise (0dB gain) (1512)
- Low THD+N (full audio bandwidth):
  0.001% ≤ 40 dB gain
  0.005% @ 60 dB gain
- Low Current: 6mA typ.
- Wide Bandwidth: 7MHz @ G=100
- High Slew Rate: 19 V/μs
- Wide Output Swing: ±13.3V on ±15V supplies
- Gain adjustable from 0 to >60 dB with one external resistor
- Industry Standard Pinouts

APPLICATIONS

- Differential Low Noise Preamplifiers
- Differential Summing Amplifiers
- Differential Variable Gain Amplifiers
- Microphone Preamplifiers
- Moving-Coil Transducer Amplifiers
- Line Input Stages
- Audio
- Sonar
- Instrumentation

Description

The THAT 1510 and 1512 are high performance audio preamplifiers suitable for microphone preamp and bus summing applications. The ICs are available in a variety of packages and pin configurations, making them pin compatible with the Analog Devices SSM2019 and SSM2017 (discontinued), and the Texas Instruments INA217 and INA163.

Gain for both parts is adjustable via one external resistor, making it possible to control gain over a wide range with a single-gang potentiometer. The 1510 gain equation is identical to that of the SSM 2019, reaching 6 dB gain with a 10 kΩ resistor. The 1512 reaches 0 dB gain with a 10 kΩ resistor. Because the 1512 exhibits significantly lower noise at lower gain settings, it is recommended over the 1510 for new designs.

Designed from the ground up in THAT's complementary dielectric isolation process and including laser-trimmed Si-Chrome thin film resistors, the THAT 1510 and 1512 improve on existing integrated microphone preamps by offering lower noise at low gains, wider bandwidth, higher slew rate, lower distortion, and lower supply current. The parts feature internal ESD overload protection on all critical pins.

In short, the THAT 1510 and 1512 provide superior performance in a popular format at an affordable price.

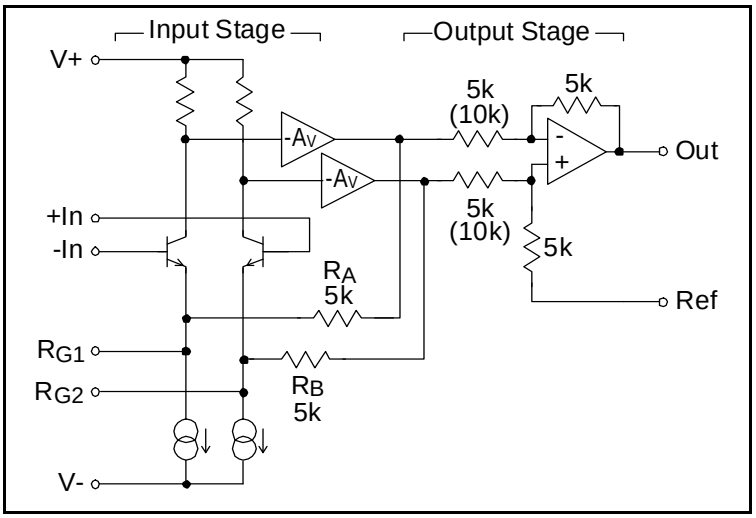

Figure 1. THAT 1510 / 1512 Equivalent Circuit Diagram
(THAT 1512 values shown in parentheses)

Pin Name	DIP8 Pkg	SO8 Pkg	SO16 Pkg	SO14 Pkg
RG1	1	1	2	3
-In	2	2	4	4
+In	3	3	5	5
V-	4	4	7	6
Ref	5	5	10	10
Out	6	6	11	9
V+	7	7	13	11
RG2	8	8	15	12

Table 1. Pin Assignments

Part Type	DIP8 Pkg	SO8 Pkg	SO16 Pkg	SO14 Pkg
1510	1510P08-U	1510S08-U	1510W16-U	1510S14-U
1512	1512P08-U	1512S08-U	Inquire	1512S14-U

Table 2. Ordering Information

THAT Corporation; 45 Sumner Street; Milford, MA 01757-1656; USA
Tel: +1 508 478 9200; Fax: +1 508 478 0990; Web: www.thatcorp.com
Copyright © 2013, THAT Corporation. Document 600031 Rev 08

SPECIFICATIONS[1]

Absolute Maximum Ratings[2,3]

Positive Supply Voltage (V_{CC})	+20 V	Lead Temp. (T_{LEAD}) (Soldering 10 sec)	260 °C
Negative Supply Voltage (V_{EE})	-20 V	Operating Temperature Range (T_{OP})	-40 to +85°C
Input Voltage ($V_{IN\ MAX}$)	V_{CC} + 0.5V, V_{EE} - 0.5V	Storage Temperature Range (T_{ST})	-40 to +125°C
Output Short-Circuit Duration (t_{SH})	Continuous	Junction Temperature (T_J)	150°C

Recommended Operating Conditions

Parameter	Symbol	Conditions	Min	Typ	Max	Units
Positive Supply Voltage	V_{CC}		+5		+20	V
Negative Supply Voltage	V_{EE}		-5		-20	V

Electrical Characteristics[2]

			1510			1512			
Parameter	Symbol	Conditions	Min	Typ	Max	Min	Typ	Max	Units
Supply Current	I_{CC}, $-I_{EE}$	No signal	—	6.0	7.9	—	6.0	7.9	mA
		V_{CC} = $-V_{EE}$ = 20V	—	—	8.0	—	—	8.0	mA
Input Bias Current	I_B	No signal; Either input connected to GND	—	4.8	14	—	4.8	14	µA
Input Offset Current	$I_{B\text{-}OFF}$	No signal	-1.4	—	+1.4	-1.4	—	+1.4	µA
Offset Voltage									
Output Stage Output Offset	Vos_{OO}	No Signal, V_{CM}=0	-5	—	+5	-5	—	+5	mV
Input Stage Input Offset	Vos_{II}		-250	—	+250	-250	—	+250	µV
Total Output Offset		G=voltage gain	-5-0.25G		5+0.25G	-5-0.25G		5+0.25G	mV
Input Voltage Range									
Common Mode	$V_{IN\text{-}CM}$	Common mode, all gains	—	± 13	—	—	± 13	—	V
Differential Mode	$V_{IN\text{-}UNBAL}$	Unbalanced One input to GND, 0dB gain	-13	—	+13	-13	—	+13	V
Differential Gain	G_{diff}		0	—	70	-6	—	64	dB
Ref Input Voltage Range			—	± 8	—	—	± 8	—	V
Ref Input Impedance			—	10	—	—	15	—	kΩ
Ref Input Gain to Output			—	0	—	—	0	—	dB
Input Impedance	$Z_{IN\text{-}DIFF}$	Differential							
		0dB gain	—	32||1.9	—	—	37||1.9	—	MΩ||pF
		20dB gain	—	32||2.0	—	—	37||2.0	—	MΩ||pF
		40dB gain	—	32||2.5	—	—	36||3.1	—	MΩ||pF
		60dB gain	—	29||8.0	—	—	31||13.9	—	MΩ||pF
	$Z_{IN\text{-}CM}$	Common mode all gains	—	8||7.7	—	—	9||7.7	—	MΩ||pF

1. All specifications are subject to change without notice.
2. Unless otherwise noted, T_A=25ºC, V_{CC}=+15V, V_{EE}= -15V.
3. Stresses above those listed under "Absolute Maximum Ratings" may cause permanent damage to the device. These are stress ratings only; the functional operation of the device at these or any other conditions above those indicated in the operational sections of this specification is not impli ed. Exposure to absolute maximum rating conditions for extended periods may affect device reliability.

Copyright © 2013, THAT Corporation

Electrical Characteristics (con't)[2]

Parameter	Symbol	Conditions	1510 Min	1510 Typ	1510 Max	1512 Min	1512 Typ	1512 Max	Units
Common Mode Rejection	CMR	V_{CM} =± 10V; DC to 60 Hz							
		0 dB gain	45	60	—	45	60	—	dB
		20 dB gain	65	80	—	65	80	—	dB
		40 dB gain	85	100	—	85	100	—	dB
		60 dB gain	105	120	—	105	120	—	dB
Power Supply Rejection	PSR	V_{CC}= -V_{EE}; ±5V to ±20V; DC to 60 Hz							
		0 dB gain	—	85	—	—	60	—	dB
		20 dB gain	—	105	—	—	105	—	dB
		40 dB gain	—	120	—	—	120	—	dB
		60 dB gain	—	124	—	—	124	—	dB
Total Harmonic Distortion	THD+N	V_{OUT} = 7Vrms; R_L = 5 kΩ f = 1kHz; BW = 20 kHz							
		0 dB gain	—	0.0005	—	—	0.001	—	%
		20 dB gain	—	0.0012	—	—	0.004	—	%
		40 dB gain	—	0.0016	—	—	0.005	—	%
		60 dB gain	—	0.005	—	—	0.008	—	%
Equivalent Input Noise	$e_{n(IN)}$	f = 1kHz,							
		0 dB gain	—	57	—	—	34	—	nV/√Hz
		20 dB gain	—	7	—	—	4.6	—	nV/√Hz
		40 dB gain	—	1.7	—	—	1.4	—	nV/√Hz
		60 dB gain	—	1	—	—	1		nV/√Hz
Input Current Noise	$i_{n(IN)}$	60 dB gain	—	2.0	—	—	2.0	—	pA/√Hz
Noise Figure	NF	60 dB gain							
		R_S = 150 Ω	—	1.6	—	—	1.6	—	dB
		R_S = 200 Ω	—	1.3	—	—	1.3	—	dB
Slew Rate	SR	R_L = 2 kΩ							
		C_L = 50 pF	13	19	—	13	19	—	V/µs
Bandwidth -3dB	BW_{-3dB}	R_L = 2 kΩ; C_L = 10 pF							
		0 dB gain	—	15	—	—	11	—	MHz
		20 dB gain	—	8	—	—	9	—	MHz
		40 dB gain	—	7	—	—	7	—	MHz
		60 dB gain	—	3	—	—	1.6		MHz
Output Gain Error	$G_{ER\ (OUT)}$	f = 1kHz; R_L = 2 kΩ							
		R_G =infinite, G=0 dB	-0.5	—	+0.5	—	—	—	dB
		R_G = 1.1 kΩ, G=20 dB	-0.5	—	+0.5	—	—	—	dB
		R_G = 101 Ω, G=40 dB	-0.5	—	+0.5	—	—	—	dB
		R_G = 10 Ω, G=60 dB	-0.5	—	+0.5	—	—	—	dB
		R_G = 10 kΩ, G=0 dB	—	—	—	-0.5	—	+0.5	dB
		R_G = 526.3 Ω, G=20 dB	—	—	—	-0.5	—	+0.5	dB
		R_G = 50.3 Ω, G=40 dB	—	—	—	-0.5	—	+0.5	dB
		R_G = 5 Ω, G=60 dB	—	—	—	-0.5	—	+0.5	dB
Output Voltage Swing	V_O	R_L = 2 kΩ							
		all gains	±13	±13.3	—	±13	±13.3	—	V
Output Short Circuit Current	I_{SC}	R_L = 0 Ω	—	± 17	—	—	± 17	—	mA
Minimum Resistive Load	R_{Lmin}		2	—	—	2	—	—	kΩ
Maximum Capacitive Load	C_{Lmax}		—	—	300	—	—	300	pF
Gain Equation			$A_V = 1 + \frac{10\,k\Omega}{R_G}$			$A_V = 0.5 + \frac{5\,k\Omega}{R_G}$			

Copyright © 2013, THAT Corporation

Applications

Gain Setting

A single external resistor (R_G) between the R_{G1} and R_{G2} pins is all that is needed to set the gain of the THAT 1510/1512, according to the formulae:

for the 1510: $A_V = 1 + \frac{10k\Omega}{R_G}$ or

for the 1512: $A_V = 0.5 + \frac{5k\Omega}{R_G}$ where

A_V is the voltage gain of the part.

Either part may reach unity gain, but the value of R_G required varies significantly between the two parts. For the 1510, gain is 0dB when R_G is infinite (open); this is the minimum gain for the 1510. At infinite R_G, the 1512 reaches -6dB gain; this is the minimum gain for the 1512. With R_G=10kΩ, the 1512 reaches 0dB gain.

Overall gain accuracy depends on the tolerance of R_G and the accuracy of the internal thin-film resistors connected to pins R_{G1} and R_{G2} in the 1510/1512 (R_A & R_B in Figure 1). These internal resistors have a typical initial accuracy (at room temperature) of ±0.5%, and are typically stable with temperature to within ±100 ppm/°C. Gain will drift with temperature based on the mismatch between the temperature coefficient of the external R_G and that of the internal resistors R_A & R_B.

For variable-gain applications where gain accuracy is important, THAT recommends using discrete, switched resistors for R_G. Where continuous control is required, or where gain accuracy is less critical, a potentiometer may be used. In such applications, designers should take care in specifying the element construction to avoid excess noise. The potentiometer taper will set the circuit's characteristic of gain vs. pot rotation. Typically, reverse log (reverse audio) taper elements offer the desired behavior in which gain increases with clockwise rotation (and lower values for R_G). See THAT Design Note 138 for a discussion of potentiometer taper and gain for the 1510 and 1512 compared to similar parts from other manufacturers.

Noise Performance

Both parts exhibit excellent voltage noise performance of ~1 nV/√Hz at high gains. With ~2 pA/√Hz current noise, they are optimized for relatively low source impedance applications, such as dynamic microphones with typically a few hundred ohm output impedances. But, because they have different internal gain structures, the 1510 has higher equivalent input noise at 0dB gain (~57 nV/√Hz) than the 1512, which runs 4.5 dB lower at ~34 nV/√Hz. The unusual and superior topology of the THAT 1512 makes its noise performance comparable to some of the better discrete designs currently available.

Inputs

Simple Configurations

As shown in Figure 2, the 1510/1512 includes protection diodes at all pins except V+ and V-.

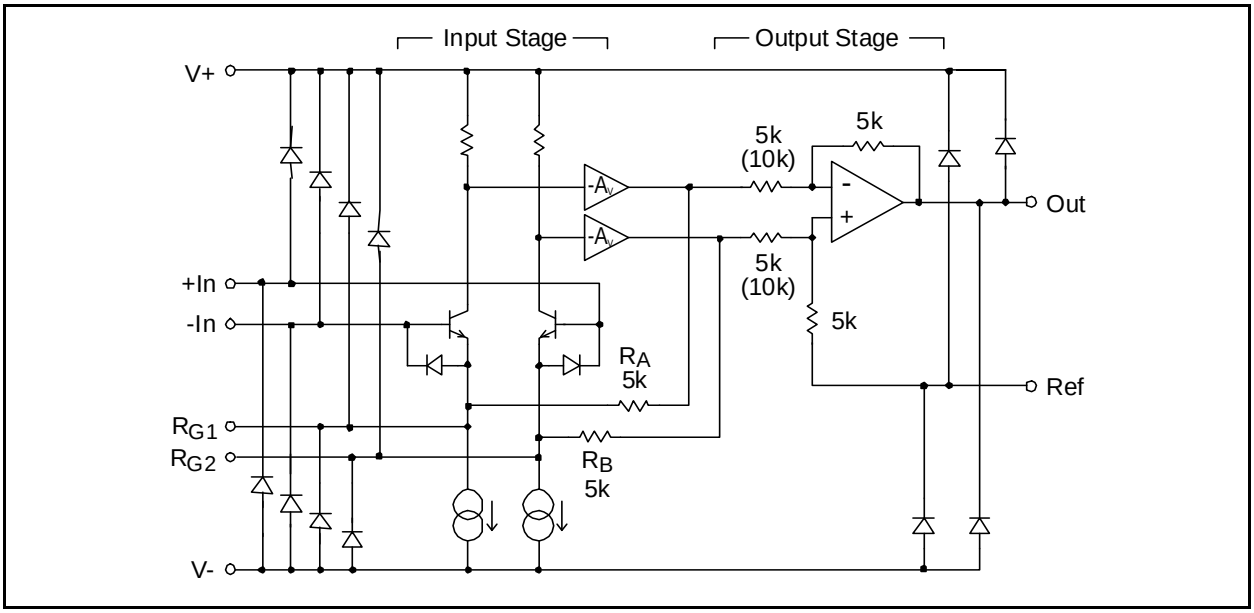

Figure 2. THAT 1510 / 1512 Equivalent Circuit with Protection Diodes

Copyright © 2013, THAT Corporation

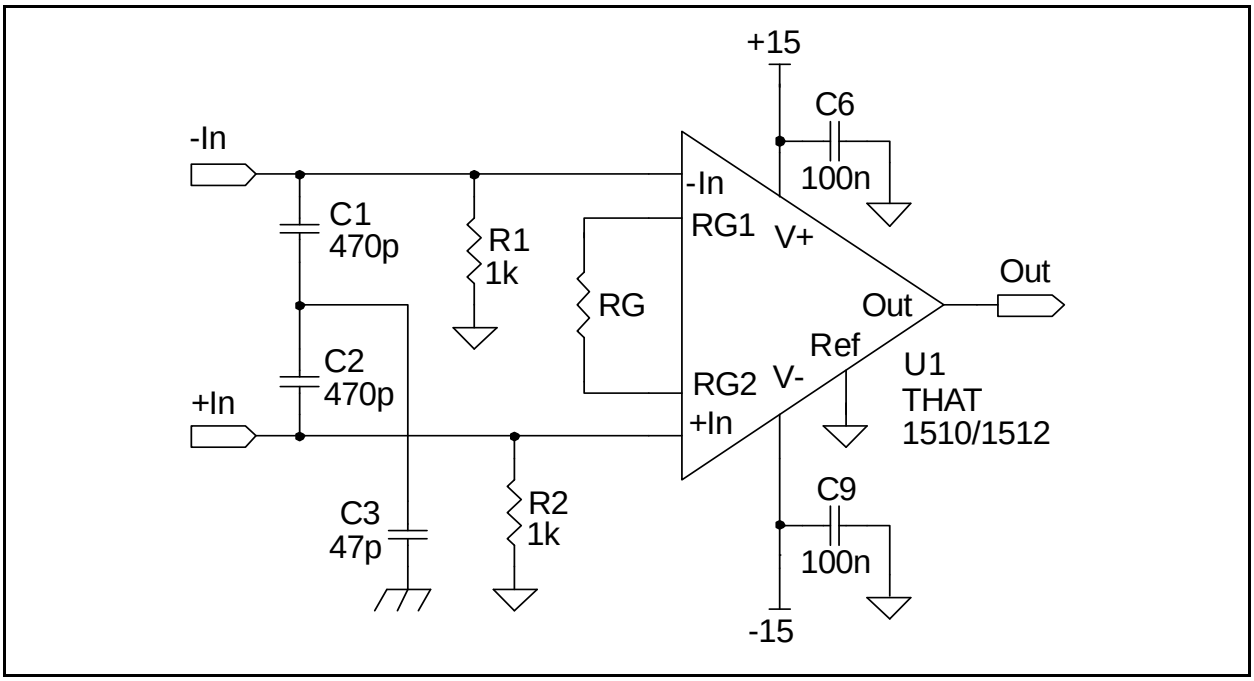

Figure 3. Basic 1510 / 1512 Circuit

These diodes reduce the likelihood that accidental electrostatic discharge (ESD) or electrical over stress (EOS) will damage the ICs. Other diodes across the base-emitter junctions of the input transistors prevent excessive reverse biasing of these junctions (which would degrade the noise performance of the input devices).

Other than the protection diodes, the 1510/1512 input pins are connected only to the bases of their respective input devices. For proper operation, the bases must be provided a source of dc bias that will maintain the inputs within the IC's input common-mode range. Figure 3 shows the simplest approach; dc bias is supplied via R_1 and R_2. At 1 kΩ each, they will minimize pickup of unwanted noise and interference, as well as generate relatively little noise due to input current noise in the 1510/1512. However, at high gains, their inherent voltage noise, plus the 1510/1512's input current noise drawn across these resistors, adds significantly to the noise at the 1510/1512's output.

Because R_G is dc coupled in the circuit of Figure 3, the dc level at the output of the 1510/1512 will vary with gain. In most applications, the output should be ac-coupled to the next stage. For applications where R_G is variable (via a pot or switched resistors) to allow gain adjustment, R_G should be ac-coupled as shown in Figure 4. By adding C_G in series with R_G, dc gain is fixed (at unity for the 1510, and ½ for the 1512). This constrains the output dc offset to just over +/-5 mV, and prevents it from varying with gain. With this low offset, ac coupling of the output is usually unnecessary.

C_G must be large enough not to interfere with low-frequency response at the smallest values of R_G. For 60 dB gain, R_G=10 Ω (1510) or R_G=5 Ω (1512). For a -3 dB point of approximately 5 Hz, C_G=3,300 μF (1510), or C_G=6,800 μF (1512). For other maximum gains or minimum frequencies, scale C_G accordingly.

Phantom Power

Phantom power is required for many condenser microphones. THAT recommends the circuit of Figure 5 when phantom power is included[4]. R_3, R_4, and D_1 - D_6 are used to limit the current that flows through the 1510/1512 inputs when the circuit inputs (-In and +In) are shorted to ground while phantom power is turned on. This causes C_4 and/or C_5 to discharge through other circuit components, often generating transient currents of several amps. R_3 and R_4 should be at least 10 Ω to limit destructive

4. In revisions 0 and 1 of this data sheet, we recommended using Schottky diodes (1N5819 types) at D_1 ~ D_4 to protect the 1510/1512 inputs against overloads. Subsequently, we discovered that the leakage of these diodes could cause problems with DC fluctuations (hence noise) at the 1510/1512 output. Upon further investigation, we concluded that conventional rectifier diodes like the 1N4004 (the glass-passivated GP version) provide adequate protection and do not introduce unacceptable leakage. Additionally, 1N4004 diodes are much cheaper and more readily available than the Schottky types.

Since publishing revision 4, we determined that the internal reverse-bias diodes between the pins +In/R_{G2} and -In/R_{G1} may be damaged by phantom power faults under certain conditions. Small-signal diodes (D_5 and D_6) avoid this problem by appearing in parallel with the internal diodes, diverting excess current around the 1510/1512.

Copyright © 2013, THAT Corporation

currents. (Higher values further limit current flow, but introduce additional source impedance and noise.) D_1 through D_4 prevent the IC's inputs from significantly exceeding the supply rails. D_5 and D_6 steer currents around the input stage in the 1510/1512, preventing damage.

The series combination of C_4 and C_5 should be made large to minimize high-pass filtering of the signal based upon the sum of the values of R_1+R_2. As well, keeping their reactance low relative to the external microphone's source impedance will avoid increasing the effects of low-frequency current noise in the 1510/1512 input stage.

Other manufacturers have recommended, and many pro audio products include, a zener diode arrangement connected to the bridge rectifier instead of the connection to V+ and V- as shown in Figure 5. THAT does not recommend this approach, because we find that R_3 and R_4 must be made much larger (e.g., ≥ 51 Ω) in order to limit peak currents enough to protect reasonably sized zener diodes (eg. 1/2 W). Such large series input resistors will limit the noise performance of the preamp. The ultimate floor is set by the impedance of the microphone, but any additional series resistance further degrades performance.

For further insights into this subject, see the Audio Engineering Society preprints "The 48 Volt Phantom Menace," by Gary K. Hebert and Frank W. Thomas, presented at the 110th AES Convention and "The 48 Volt Phantom Menace Returns", by Rosalfonso Bortoni and Wayne Kirkwood presented at the 127th AES Convention.

Impedance and Line Input Configurations

A higher common-mode input impedance is desirable (compared with that of Figures 3 and 4) when input coupling capacitors (C_4 and C_5) are used to block phantom power. At low frequencies where the reactance of C_4 and C_5 become significant (compared to the common-mode input impedances), the two capacitors interact with the common-mode input impedance (seen looking to the right-side of both capacitors) to form voltage dividers for common-mode signals. Differences in the two capacitors' values leads to different voltage dividers, spoiling the low-frequency common-mode rejection of the stage. Since C_4 and C_5 are generally large, electrolytic types, precise matching is difficult and expensive to achieve. High common-mode input impedance reduces the matching requirement by decreasing the frequency at which the capacitive reactance becomes significant inversely with the common-mode input impedance.

The "T-bias" circuit (R_1, R_2, and R_7) shown in Figure 5 accommodates this objective. In this circuit, R_1 and R_2 are connected to a third resistor R_7, boosting the low-frequency common mode input

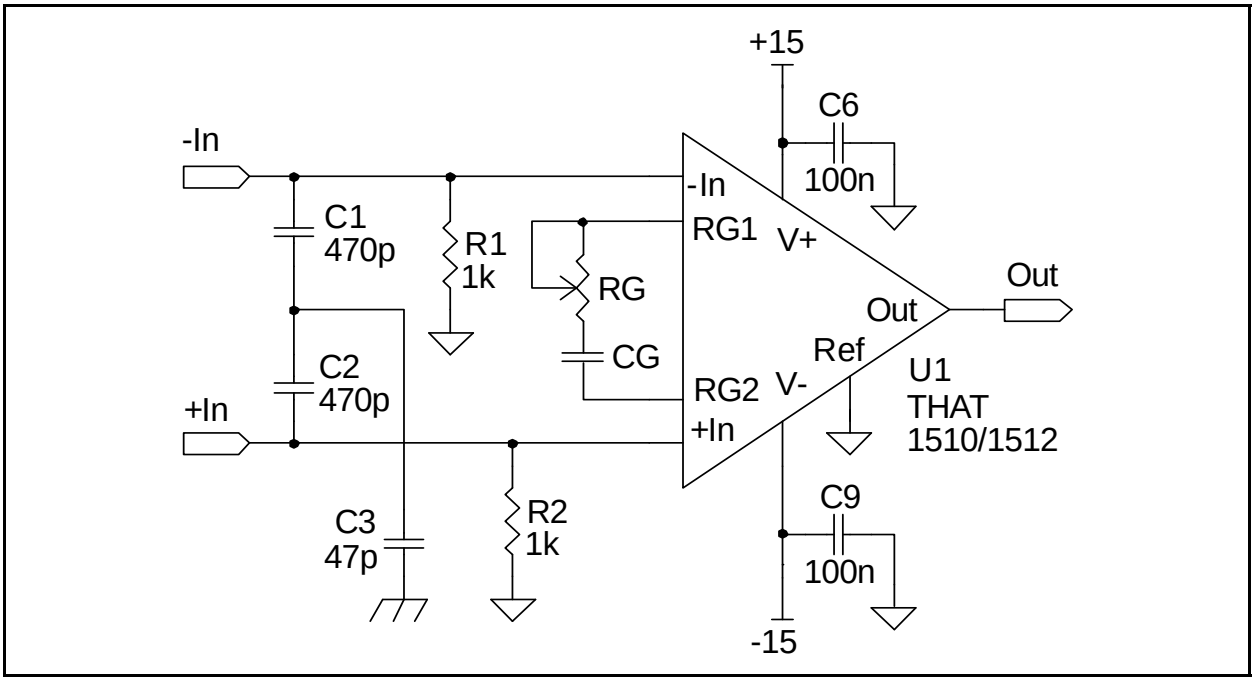

Figure 4. Basic 1510 / 1512 Circuit with Variable Gain

Copyright © 2013, THAT Corporation

impedance (as "seen looking in" from the coupling capacitors) to the value of R_1 + (2*R_7) -- approximately 45 kΩ with the values shown. The increased common mode impedance from T-bias improves LF common mode rejection by reducing capacitor matching requirements by more than a factor of ten over the simpler circuit wherein R_7=0 Ω. The circuit works well with the values shown.

Note also that the overall common-mode input impedance of the circuit is dominated by the phantom-power resistors (R_5 and R_6). For the circuit of Figure 5, this is approximately 5.9 kΩ per leg.

The 1510/1512 can be used as a line input receiver by adding attenuation to the preamplifier inputs and changing the circuit topology to allow switching of input, fixed attenuation, and gain adjustment. The optimum circuit depends on the specific requirements of the application. For more details and specific applications advice, please consult THAT's application notes, or our applications engineers at the address and telephone below or via email at apps_support@thatcorp.com.

Reference Terminal

The "Ref" pin provides a reference for the output signal, and is normally connected to analog ground. If necessary, the "Ref" pin can be used for offset correction or DC level shifting. However, in order to prevent spoiling the excellent common-mode rejection of the 1510/1512, the source impedance driving the "Ref" pin should be under 1Ω.

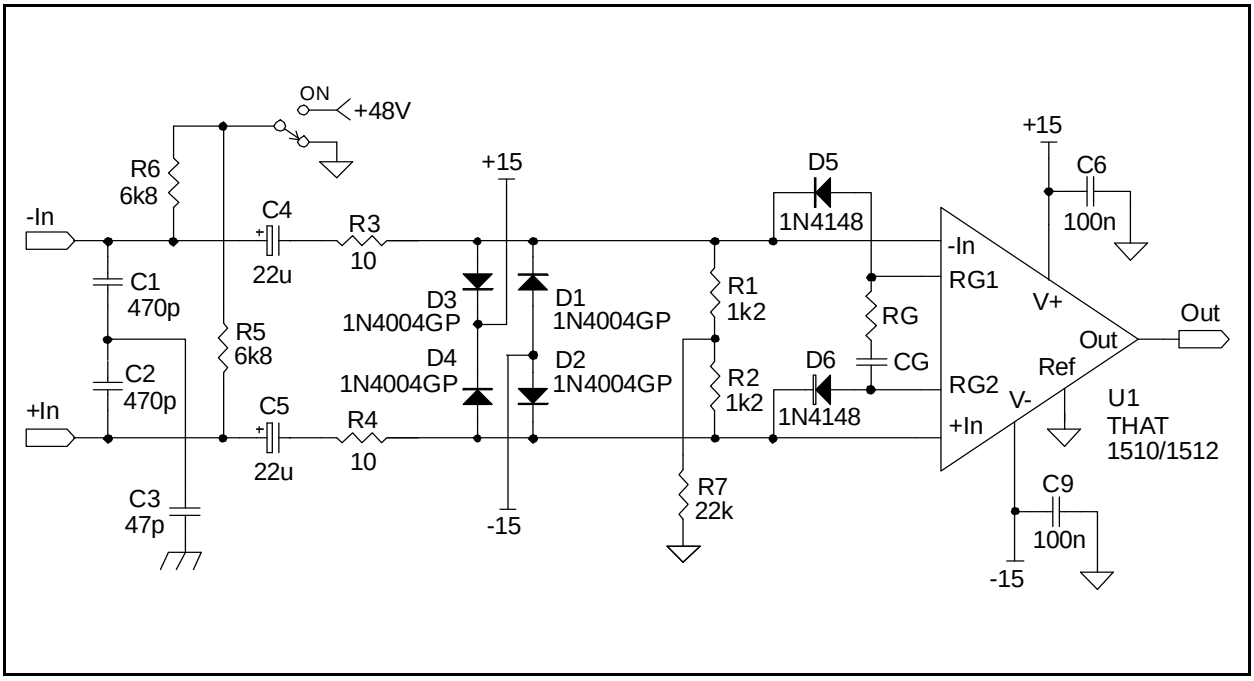

Figure 5. Recommended 1510 / 1512 Circuit with Phantom Power

Package Information

Both the THAT 1510 and 1512 are available in 8-pin SOIC, 8-pin DIP, and 14-pin SOIC packages. The 1510 is also available in a 16-pin (widebody) SOIC package. Other version/package combinations will be considered based on customer demand.

The package dimensions are shown in Figures 6, 7, 8, & 9, while pinouts are given in Table 1.

All versions of the 1510 and 1512 are lead free and RoHS compliant. Material Declaration Data Sheets on the parts are available at our web site, www.thatcorp.com or upon request.

Copyright © 2013, THAT Corporation

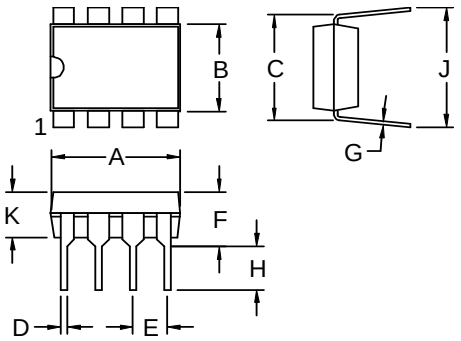

ITEM	MILLIMETERS	INCHES
A	9.52±0.10	0.375±0.004
B	6.35±0.10	0.250±0.004
C	7.49/8.13	0.295/0.320
D	0.46	0.018
E	2.54	0.100
F	3.68/4.32	0.145/0.170
G	0.25	0.010
H	3.18±0.10	0.125±0.004
J	8.13/9.40	0.320/0.370
K	3.30±0.10	0.130±0.004

Figure 6. 8-pin DIP package outline

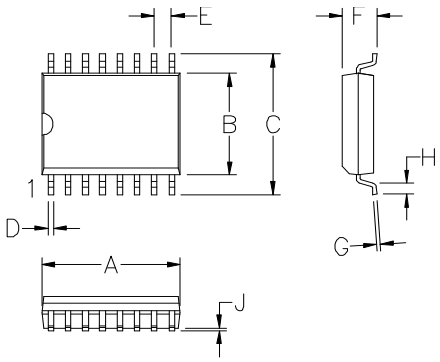

ITEM	MILLIMETERS	INCHES
A	10.10/10.29	0.397/0.405
B	7.39/7.59	0.291/0.299
C	10.11/10.52	0.398/0.414
D	0.30/0.51	0.012/0.020
E	1.27	0.050
F	2.44/2.64	0.096/0.104
G	0.23/0.33	0.009/0.013
H	0.51/1.02	0.020/0.040
J	0.10/0.30	0.004/0.012

Figure 7. 16-pin SO Wide package outline

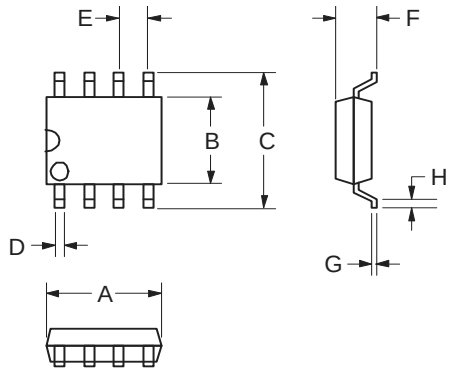

ITEM	MILLIMETERS	INCHES
A	4.80/4.98	0.189/0.196
B	3.81/3.99	0.150/0.157
C	5.80/6.20	0.228/0.244
D	0.36/0.46	0.014/0.018
E	1.27	0.050
F	1.35/1.73	0.053/0.068
G	0.19/0.25	0.0075/0.0098
H	0.41/1.27	0.016/0.05

Figure 8. 8-pin SOIC package outline

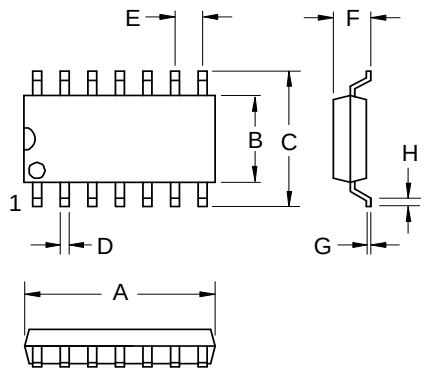

ITEM	MILLIMETERS	INCHES
A	8.56/8.79	0.337/0.346
B	3.81/3.99	0.150/0.157
C	5.80/6.20	0.228/0.244
D	0.36/0.46	0.014/0.018
E	1.27	0.050
F	1.35/1.73	0.053/0.068
G	0.19/0.25	0.0075/0.0098
H	0.41/1.27	0.016/0.05

Figure 9. 14-pin SOIC package outline

Revision History

Revision	ECO	Date	Changes	Page
07	2322	9/16/09	Added Max. Input Voltage specification.	2
08	2829	10/02/13	Corrected typographical error in specification table.	3

Copyright © 2013, THAT Corporation

Компания «ЭлектроПласт» предлагает заключение долгосрочных отношений при поставках импортных электронных компонентов на взаимовыгодных условиях!

Наши преимущества:

- Оперативные поставки широкого спектра электронных компонентов отечественного и импортного производства напрямую от производителей и с крупнейших мировых складов;
- Поставка более 17-ти миллионов наименований электронных компонентов;
- Поставка сложных, дефицитных, либо снятых с производства позиций;
- Оперативные сроки поставки под заказ (от 5 рабочих дней);
- Экспресс доставка в любую точку России;
- Техническая поддержка проекта, помощь в подборе аналогов, поставка прототипов;
- Система менеджмента качества сертифицирована по Международному стандарту ISO 9001;
- Лицензия ФСБ на осуществление работ с использованием сведений, составляющих государственную тайну;
- Поставка специализированных компонентов (Xilinx, Altera, Analog Devices, Intersil, Interpoint, Microsemi, Aeroflex, Peregrine, Syfer, Eurofarad, Texas Instrument, Miteq, Cobham, E2V, MA-COM, Hittite, Mini-Circuits,General Dynamics и др.);

Помимо этого, одним из направлений компании «ЭлектроПласт» является направление «Источники питания». Мы предлагаем Вам помощь Конструкторского отдела:

- Подбор оптимального решения, техническое обоснование при выборе компонента;
- Подбор аналогов;
- Консультации по применению компонента;
- Поставка образцов и прототипов;
- Техническая поддержка проекта;
- Защита от снятия компонента с производства.

Как с нами связаться

Телефон: 8 (812) 309 58 32 (многоканальный)
Факс: 8 (812) 320-02-42
Электронная почта: org@eplast1.ru
Адрес: 198099, г. Санкт-Петербург, ул. Калинина, дом 2, корпус 4, литера А.