UJA1169

Mini high-speed CAN system basis chip

Rev. 1 — 4 February 2016 Product data sheet

1. General description

The UJA1169 is a mini high-speed CAN System Basis Chip (SBC) containing an ISO 11898-2:201x (upcoming merged ISO 11898-2/5/6) compliant HS-CAN transceiver and an integrated 5 V or 3.3 V 250 mA scalable supply (V1) for a microcontroller and/or other loads. It also features a watchdog and a Serial Peripheral Interface (SPI). The UJA1169 can be operated in very low-current Standby and Sleep modes with bus and local wake-up capability.

The UJA1169 comes in six variants. The UJA1169TK, UJA1169TK/F, UJA1169TK/X and UJA1169TK/X/F contain a 5 V regulator (V1). V1 is a 3.3 V regulator in the UJA1169TK/3 and the UJA1169TK/F/3.

The UJA1169TK, UJA1169TK/F, UJA1169TK/3 and UJA1169TK/F/3 variants feature a second on-board 5 V regulator (V2) that supplies the internal CAN transceiver and can also be used to supply additional on-board hardware.

The UJA1169TK/X and UJA1169TK/X/F are equipped with a 5 V supply (VEXT) for off-board components. VEXT is short-circuit proof to the battery, ground and negative voltages. The integrated CAN transceiver is supplied internally via V1, in parallel with the microcontroller.

The UJA1169xx/F variants support ISO 11898-6:2013 and ISO 11898-2:201x compliant CAN partial networking with a selective wake-up function incorporating CAN FD-passive. CAN FD-passive is a feature that allows CAN FD bus traffic to be ignored in Sleep/Standby mode. CAN FD-passive partial networking is the perfect fit for networks that support both CAN FD and classic CAN communications. It allows normal CAN controllers that do not need to communicate CAN FD messages to remain in partial networking Sleep/Standby mode during CAN FD communication without generating bus errors.

The UJA1169 implements the standard CAN physical layer as defined in the current ISO11898 standard (-2:2003, -5:2007, -6:2013). Pending the release of the upcoming version of ISO11898-2:201x including CAN FD, additional timing parameters defining loop delay symmetry are included. This implementation enables reliable communication in the CAN FD fast phase at data rates up to 2 Mbit/s.

A dedicated LIMP output pin is provided to flag system failures.

A number of configuration settings are stored in non-volatile memory. This arrangement makes it possible to configure the power-on and limp-home behavior of the UJA1169 to meet the requirements of different applications.

2. Features and benefits

2.1 General

- ISO 11898-2:201x (upcoming merged ISO 11898-2/5/6) compliant 1 Mbit/s high-speed CAN transceiver supporting CAN FD active communication up to 2 Mbit/s in the CAN FD data field (all six variants)
- Autonomous bus biasing according to ISO 11898-6:2013 and ISO 11898-2:201x
- Scalable 5 V or 3.3 V 250 mA low-drop voltage regulator for 5 V/3.3 V microcontroller supply (V1) based on external PNP transistor concept for thermal scaling
- CAN-bus connections are truly floating when power to pin BAT is off
- No ‘false’ wake-ups due to CAN FD traffic (in variants supporting partial networking)

2.2 Designed for automotive applications

- ±8 kV ElectroStatic Discharge (ESD) protection, according to the Human Body Model (HBM) on the CAN-bus pins
- ±6 kV ESD protection according to IEC 61000-4-2 on pins BAT, WAKE, VEXT and the CAN-bus pins
- CAN-bus pins short-circuit proof to ±58 V
- Battery and CAN-bus pins protected against automotive transients according to ISO 7637-3
- Very low quiescent current in Standby and Sleep modes with full wake-up capability
- Leadless HVSON20 package (3.5 mm × 5.5 mm) with improved Automated Optical Inspection (AOI) capability and low thermal resistance
- Dark green product (halogen free and Restriction of Hazardous Substances (RoHS) compliant)

2.3 Low-drop voltage regulator for 5 V/3.3 V microcontroller supply (V1)

- 5 V/3.3 V nominal output; ±2 % accuracy
- 250 mA output current capability
- Thermal management via optional external PNP
- Current limiting above 250 mA
- Support for microcontroller RAM retention down to a battery voltage of 2 V (5 V only)
- Undervoltage reset with selectable detection thresholds of 60 %, 70 %, 80 % or 90 % of output voltage, configurable in non-volatile memory (5 V variants only)
- Excellent transient response with a small ceramic output capacitor
- Output is short-circuit proof to GND
- Turned off in Sleep mode

2.4 On-board CAN supply (V2; UJA1169TK, UJA1169TK/F, UJA1169TK/3 and UJA1169TK/F/3 only)

- 5 V nominal output; ±2 % accuracy
- 100 mA output current capability
- Current limiting above 100 mA
- Excellent transient response with a small ceramic output capacitor

All information provided in this document is subject to legal disclaimers.

© NXP Semiconductors N.V. 2016. All rights reserved.

- Output is short-circuit proof to GND
- User-defined on/off behavior via SPI

2.5 Off-board sensor supply (VEXT; UJA1169TK/X and UJA1169TK/X/F only)

- 5 V nominal output; ±2 % accuracy
- 100 mA output current capability
- Current limiting above 100 mA
- Excellent transient response with a small ceramic output load capacitor
- Output is short-circuit proof to BAT, GND and negative voltages down to −18 V
- User-defined on/off behavior via SPI

2.6 Power Management

- Standby mode featuring very low supply current; voltage V1 remains active to maintain the supply to the microcontroller
- Sleep mode featuring very low supply current with voltage V1 switched off
- Remote wake-up capability via standard CAN wake-up pattern or ISO 11898-6:2013 and ISO 11898-2:201x compliant selective wake-up frame detection including CAN FD passive support (/F versions only)
- Local wake-up via the WAKE pin
- Wake-up source recognition

2.7 System control and diagnostic features

- Mode control via the Serial Peripheral Interface (SPI)
- Overtemperature warning and shutdown
- Watchdog with Window, Timeout and Autonomous modes and microcontroller-independent clock source
- Optional cyclic wake-up in watchdog Timeout mode
- Watchdog automatically re-enabled when wake-up event captured
- Watchdog period selectable between 8 ms and 4 s supporting remote flash programming via the CAN-bus
- LIMP output pin with configurable activation threshold
- Watchdog failure, RSTN clamping and overtemperature events trigger the dedicated LIMP output signal
- 16-, 24- and 32-bit SPI for configuration, control and diagnosis
- Bidirectional reset pin with variable power-on reset length; configurable in non-volatile memory to support a number of different microcontrollers
- Customer configuration of selected functions via non-volatile memory
- Dedicated modes for software development and end-of-line flashing

All information provided in this document is subject to legal disclaimers.

© NXP Semiconductors N.V. 2016. All rights reserved.

3. Product family overview

Table 1. Feature overview of UJA1169 SBC family

Device	Modes			Supplies					Host Interface		Additional Features					
	Normal and Standby modes	Sleep mode	Reset mode	V1: 5 V, µC only	V1: 5 V, µC and CAN	V1: 3.3 V, µC only	V2: 5 V, CAN + on-board loads	VEXT: 5 V, external loads	SPI: for control and diagnostics	RSTN: reset pin	Watchdog	Local WAKE pin	LIMP pin	Non-volatile memory	CAN partial networking	CAN FD passive
UJA1169TK	●	●	●	●			●		●	●	●	●	●	●		
UJA1169TK/X	●	●	●		●			●	●	●	●	●	●	●		
UJA1169TK/F	●	●	●	●			●		●	●	●	●	●	●	●	●
UJA1169TK/X/F	●	●	●		●			●	●	●	●	●	●	●	●	●
UJA1169TK/3	●	●	●			●	●		●	●	●	●	●	●		
UJA1169TK/F/3	●	●	●			●	●		●	●	●	●	●	●	●	●

4. Ordering information

Table 2. Ordering information

Type number[1]	Package		
	Name	Description	Version
UJA1169TK	HVSON20	plastic thermal enhanced extremely thin quad flat package; no leads; 20 terminals; body 3.5 × 5.5 × 0.85 mm	SOT1360-1
UJA1169TK/X			
UJA1169TK/F[2]			
UJA1169TK/X/F[2]			
UJA1169TK/3			
UJA1169TK/F/3[2]			

[1] UJA1169TK, UJA1169TK/F, UJA1169TK/3 and UJA1169TK/F/3 with dedicated CAN supply (V2); UJA1169TK/X and UJA1169TK/X/F with protected off-board sensor supply (VEXT).

[2] UJA1169TK/F, UJA1169TK/F/3 and UJA1169TK/X/F with partial networking according to ISO 11898-6:2013 and ISO 11898-2:201x incorporating CAN FD passive support.

All information provided in this document is subject to legal disclaimers.

© NXP Semiconductors N.V. 2016. All rights reserved.

5. Block diagram

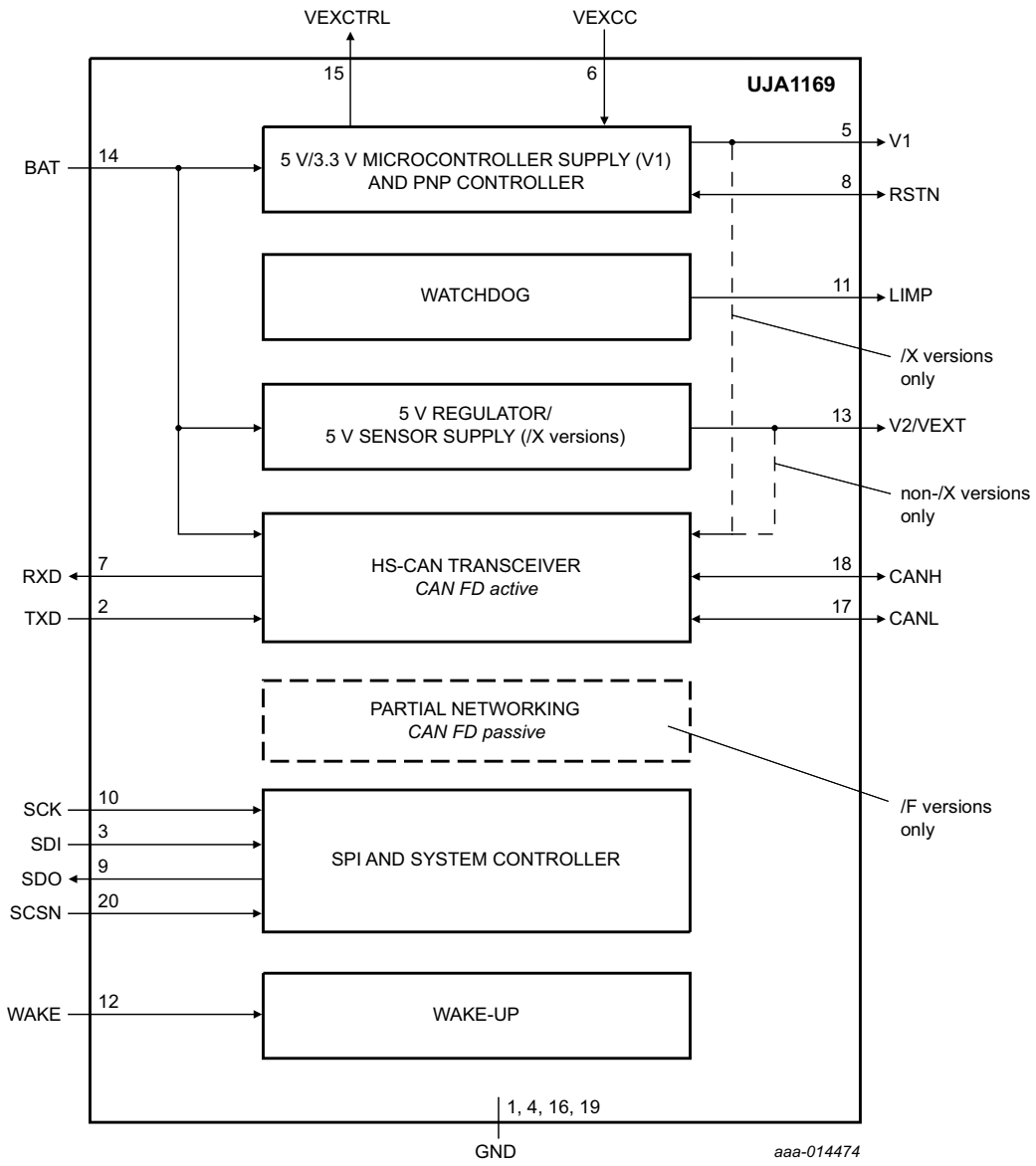

The internal CAN transceiver is supplied from V1 in the UJA1169TK/X and UJA1169TK/X/F and from V2 in the other variants.

Fig 1. Block diagram of UJA1169

All information provided in this document is subject to legal disclaimers.

© NXP Semiconductors N.V. 2016. All rights reserved.

6. Pinning information

6.1 Pinning

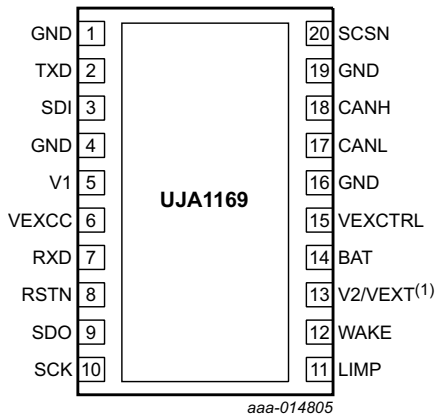

(1) V2 in the UJA1169TK, UJA1169TK/3, UJA1169TK/F and UJA1169TK/F/3; VEXT in the UJA1169TK/X and UJA1169TK/X/F

Fig 2. Pin configuration diagram

6.2 Pin description

Table 3. Pin description

Symbol	Pin	Description
GND	1[1]	ground
TXD	2	transmit data input
SDI	3	SPI data input
GND	4[1]	ground
V1	5	5 V/3.3 V microcontroller supply voltage
VEXCC	6	current measurement for external PNP transistor; this pin is connected to the collector of the external PNP transistor
RXD	7	receive data output; reflects data on bus lines and wake-up conditions
RSTN	8	reset input/output; active-LOW
SDO	9	SPI data output
SCK	10	SPI clock input
LIMP	11	limp home output, open-drain; active-LOW
WAKE	12	local wake-up input
V2	13	5 V CAN supply (UJA1169TK, UJA1169TK/3, UJA1169TK/F and UJA1169TK/F/3 only)
VEXT	13	5 V sensor supply (UJA1169TK/X and UJA1169TK/X/F only)
BAT	14	battery supply voltage
VEXCTRL	15	control pin of the external PNP transistor; this pin is connected to the base of the external PNP transistor
GND	16[1]	ground
CANL	17	LOW-level CAN-bus line

All information provided in this document is subject to legal disclaimers.

© NXP Semiconductors N.V. 2016. All rights reserved.

Table 3. Pin description *...continued*

Symbol	Pin	Description
CANH	18	HIGH-level CAN-bus line
GND	19[1]	ground
SCSN	20	SPI chip select input; active-LOW

[1] The exposed die pad at the bottom of the package allows for better heat dissipation and grounding from the SBC via the printed circuit board. For enhanced thermal and electrical performance, connect the exposed die pad to GND.

7. Functional description

7.1 System controller

The system controller manages register configuration and controls the internal functions of the UJA1169. Detailed device status information is collected and made available to the microcontroller.

7.1.1 Operating modes

The system controller contains a state machine that supports seven operating modes: Normal, Standby, Sleep, Reset, Forced Normal, Overtemp and Off. The state transitions are illustrated in Figure 3.

7.1.1.1 Normal mode

Normal mode is the active operating mode. In this mode, all the hardware on the device is available and can be activated (see Table 4). Voltage regulator V1 is enabled to supply the microcontroller.

The CAN interface can be configured to be active and thus to support normal CAN communication. Depending on the SPI register settings, the watchdog may be running in Window or Timeout mode and the V2/VEXT output may be active.

7.1.1.2 Standby mode

Standby mode is the first-level power-saving mode of the UJA1169, offering reduced current consumption. The transceiver is unable to transmit or receive data in Standby mode. The SPI remains enabled and V1 is still active; the watchdog is active (in Timeout mode) if enabled. The behavior of V2/VEXT is determined by the SPI setting.

If remote CAN wake-up is enabled (CWE = 1; see Table 32), the receiver monitors bus activity for a wake-up request. The bus pins are biased to GND (via $R_{i(cm)}$) when the bus is inactive for $t > t_{to(silence)}$ and at approximately 2.5 V when there is activity on the bus (autonomous biasing). CAN wake-up can occur via a standard wake-up pattern or via a selective wake-up frame (selective wake-up is enabled when CPNC = PNCOK = 1, otherwise standard wake-up is enabled; see Table 15).

Pin RXD is forced LOW when any enabled wake-up event is detected. This event can be either a regular wake-up (via the CAN-bus or pin WAKE) or a diagnostic wake-up such as an overtemperature event (see Section 7.10).

All information provided in this document is subject to legal disclaimers.

© NXP Semiconductors N.V. 2016. All rights reserved.

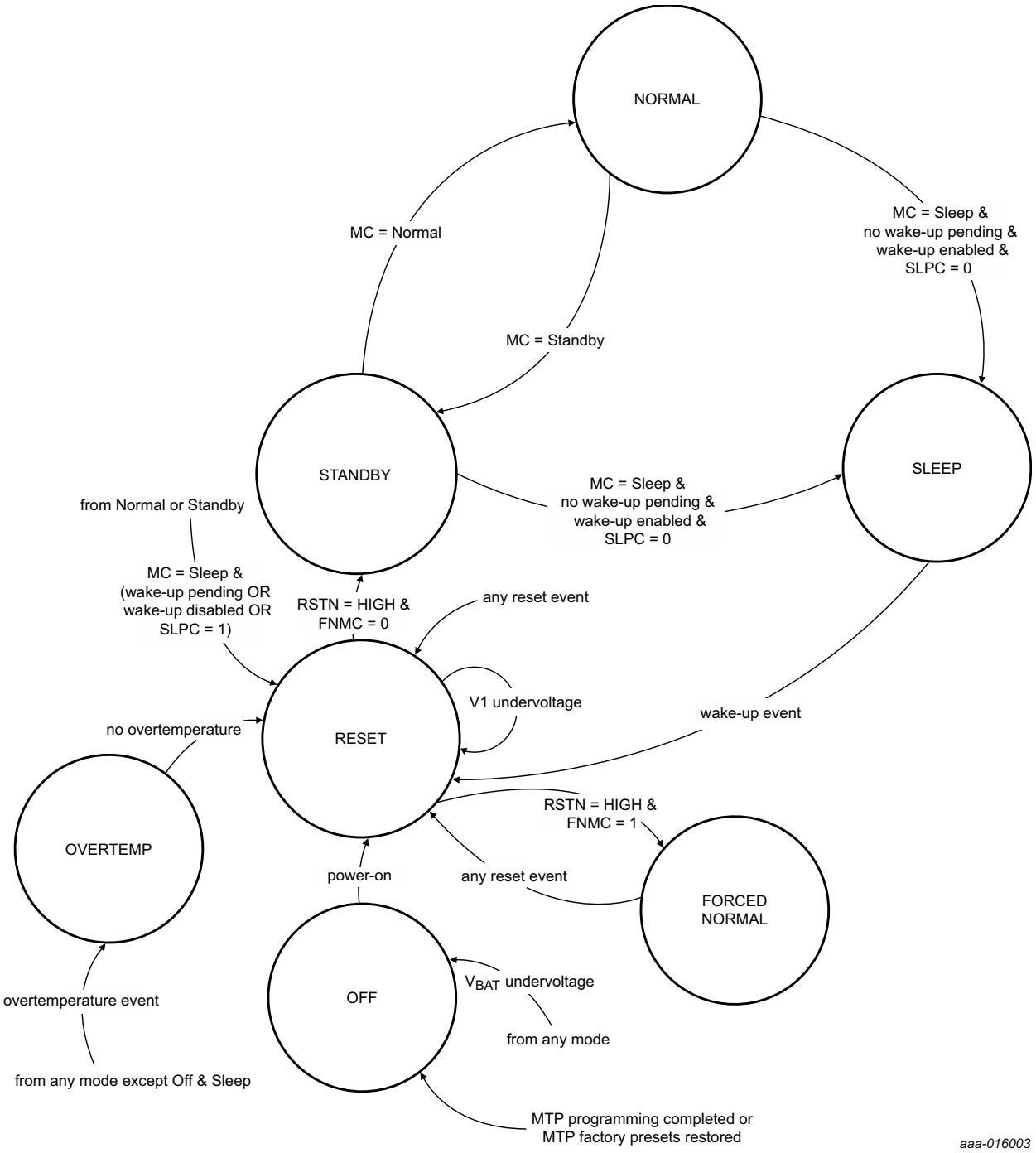

Fig 3. UJA1169 system controller state diagram

7.1.1.3 Sleep mode

Sleep mode is the second-level power-saving mode of the UJA1169. The difference between Sleep and Standby modes is that V1 is off in Sleep mode and temperature protection is inactive.

All information provided in this document is subject to legal disclaimers.

© NXP Semiconductors N.V. 2016. All rights reserved.

Any enabled regular wake-up via CAN or WAKE or any diagnostic wake-up event will cause the UJA1169 to wake up from Sleep mode. The behavior of V2/VEXT is determined by the SPI settings. The SPI and the watchdog are disabled. Autonomous bus biasing is active.

Sleep mode can be permanently disabled in applications where, for safety reasons, the supply voltage to the host controller must never be cut off. Sleep mode is permanently disabled by setting the Sleep control bit (SLPC) in the SBC configuration register (see Table 9) to 1. This register is located in the non-volatile memory area of the device (see Section 7.11). When SLPC = 1, a Sleep mode SPI command (MC = 001) triggers an SPI failure event instead of a transition to Sleep mode.

7.1.1.4 Reset mode

Reset mode is the reset execution state of the SBC. This mode ensures that pin RSTN is pulled down for a defined time to allow the microcontroller to start up in a controlled manner.

The transceiver is unable to transmit or receive data in Reset mode. The behavior of V2/VEXT is determined by the settings of bits V2C/VEXTC and V2SUC/VEXTSUC (see Section 7.5.3). The SPI is inactive; the watchdog is disabled; V1 and overtemperature detection are active.

After the UJA1169 exits Reset mode (positive edge on RSTN), an SPI read/write access must not be attempted for at least $t_{to(SPI)}$. Any earlier access may be ignored (without generating an SPI failure event).

7.1.1.5 Off mode

The UJA1169 switches to Off mode when the battery is first connected or from any mode when $V_{BAT} < V_{th(det)poff}$. Only power-on detection is enabled; all other modules are inactive. The UJA1169 starts to boot up when the battery voltage rises above the power-on detection threshold $V_{th(det)pon}$ (triggering an initialization process) and switches to Reset mode after $t_{startup}$. In Off mode, the CAN pins disengage from the bus (high-ohmic with respect to GND).

7.1.1.6 Overtemp mode

Overtemp mode is provided to prevent the UJA1169 being damaged by excessive temperatures. The UJA1169 switches immediately to Overtemp mode from any mode (other than Off mode or Sleep mode) when the global chip temperature rises above the overtemperature protection activation threshold, $T_{th(act)otp}$.

To help prevent the loss of data due to overheating, the UJA1169 issues a warning when the IC temperature rises above the overtemperature warning threshold ($T_{th(warn)otp}$). When this threshold is reached, status bit OTWS (see Table 6) is set and an overtemperature warning event is captured (OTW = 1; see Table 26), if enabled (OTWE = 1; see Table 30).

In Overtemp mode, the CAN transmitter and receiver are disabled and the CAN pins are in a high-ohmic state. No wake-up event will be detected, but a pending wake-up will still be signaled by a LOW level on pin RXD, which will persist after the overtemperature event has been cleared. V1 is off and pin RSTN is driven LOW. In the UJA1169TK/X and UJA1169TK/X/F, VEXT is off. In the UJA1169TK, UJA1169TK/3, UJA1169TK/F and UJA1169TK/F/3, V2 is turned off when the SBC enters Overtemp mode.

All information provided in this document is subject to legal disclaimers.

© NXP Semiconductors N.V. 2016. All rights reserved.

7.1.1.7 Forced Normal mode

Forced Normal mode simplifies SBC testing and is useful for initial prototyping as well as first flashing of the microcontroller. The watchdog is disabled in Forced Normal mode. The low-drop voltage regulator (V1) is active, VEXT/V2 is enabled and the CAN transceiver is active.

Bit FNMC is factory preset to 1, so the UJA1169 initially boots up in Forced Normal mode (see Table 9). This feature allows a newly installed device to be run in Normal mode without a watchdog. So the microcontroller can, optionally, be flashed via the CAN-bus without having to consider the integrated watchdog.

The register containing bit FNMC (address 74h) is stored in non-volatile memory. So once bit FNMC is programmed to 0, the SBC will no longer boot up in Forced Normal mode, allowing the watchdog to be enabled.

Even in Forced Normal mode, a reset event (e.g. an external reset or a V1 undervoltage) will trigger a transition to Reset mode with normal Reset mode behavior (except that the CAN transmitter remains active if there is no V_{CAN} undervoltage). When the UJA1169 exits Reset mode, however, it returns to Forced Normal mode instead of switching to Standby mode.

In Forced Normal mode, only the Main status register, the Watchdog status register, the Identification register and registers stored in non-volatile memory can be read. The non-volatile memory area is fully accessible for writing as long as the UJA1169 is in the factory preset state (for details see Section 7.11).

7.1.1.8 Hardware characterization for the UJA1169 operating modes

Table 4. Hardware characterization by functional block

Block	Operating mode						
	Off	Forced Normal	Standby	Normal	Sleep	Reset	Overtemp
V1	off[1]	on	on	on	off	on	off
VEXT/V2	off	on	[2]	[2]	[2]	[2]	VEXT/V2 off
RSTN	LOW	HIGH	HIGH	HIGH	LOW	LOW	LOW
SPI	disabled	active[3]	active	active	disabled	disabled	disabled
Watchdog	off	off	determined by bits WMC (see Table 8)[4]	determined by bits WMC	determined by bits WMC[4]	off	off
CAN	off	Active	Offline	Active/ Offline/ Listen-only (determined by bits CMC; see Table 15)	Offline	Offline	off
RXD	V1 level	CAN bit stream	V1 level/LOW if wake-up detected	CAN bit stream if CMC = 01/10/11; otherwise same as Standby/Sleep	V1 level/LOW if wake-up detected	V1 level/LOW if wake-up detected	V1 level/LOW if wake-up detected

[1] When the SBC switches from Reset, Standby or Normal mode to Off mode in the 5 V variants, V1 behaves as a current source during power down while V_{BAT} is falling from $V_{th(det)pof}$ down to 2 V (RAM retention feature; see Section 7.5.1).

[2] Determined by bits V2C/VEXTC and V2SUC/VEXTSUC (see Table 12)

[3] Limited register access: Main status register, Watchdog status register, Identification register and non-volatile memory only.

[4] Window mode is only active in Normal mode.

All information provided in this document is subject to legal disclaimers.

© NXP Semiconductors N.V. 2016. All rights reserved.

7.1.2 System control registers

7.1.2.1 Mode control register (0x01)

The operating mode is selected via bits MC in the Mode control register. The Mode control register is accessed via SPI address 0x01 (see Section 7.15).

Table 5. Mode control register (address 01h)

Bit	Symbol	Access	Value	Description
7:3	reserved	R	-	
2:0	MC	R/W		mode control:
			001	Sleep mode
			100	Standby mode
			111	Normal mode

7.1.2.2 Main status register (0x03)

The Main status register can be accessed to monitor the status of the overtemperature warning flag and to determine whether the UJA1169 has entered Normal mode after initial power-up. It also indicates the source of the most recent reset event.

Table 6. Main status register (address 03h)

Bit	Symbol	Access	Value	Description
7	reserved	R	-	
6	OTWS	R		overtemperature warning status:
			0	IC temperature below overtemperature warning threshold
			1	IC temperature above overtemperature warning threshold
5	NMS	R		Normal mode status:
			0	UJA1169 has entered Normal mode (after power-up)
			1	UJA1169 has powered up but has not yet switched to Normal mode
4:0	RSS	R		reset source status:
			00000	left Off mode (power-on)
			00001	CAN wake-up in Sleep mode
			00100	wake-up via WAKE pin in Sleep mode
			01100	watchdog overflow in Sleep mode (Timeout mode)
			01101	diagnostic wake-up in Sleep mode
			01110	watchdog triggered too early (Window mode)
			01111	watchdog overflow (Window mode or Timeout mode with WDF = 1)
			10000	illegal watchdog mode control access
			10001	RSTN pulled down externally
			10010	left Overtemp mode
			10011	V1 undervoltage
			10100	illegal Sleep mode command received
			10110	wake-up from Sleep mode due to a frame detect error

All information provided in this document is subject to legal disclaimers.

© NXP Semiconductors N.V. 2016. All rights reserved.

7.2 Watchdog

7.2.1 Watchdog overview

The UJA1169 contains a watchdog that supports three operating modes: Window, Timeout and Autonomous. In Window mode (available only in SBC Normal mode), a watchdog trigger event within a defined watchdog window triggers and resets the watchdog timer. In Timeout mode, the watchdog runs continuously and can be triggered and reset at any time within the watchdog period by a watchdog trigger. Watchdog time-out mode can also be used for cyclic wake-up of the microcontroller. In Autonomous mode, the watchdog can be off or autonomously in Timeout mode, depending on the selected SBC mode (see Section 7.2.5).

The watchdog mode is selected via bits WMC in the Watchdog control register (Table 8). The SBC must be in Standby mode when the watchdog mode is changed. If Window mode is selected (WMC = 100), the watchdog remains in (or switches to) Timeout mode until the SBC enters Normal mode. Any attempt to change the watchdog operating mode (via WMC) while the SBC is in Normal mode causes the UJA1169 to switch to Reset mode and the reset source status bits (RSS) to be set to 10000 (‘illegal watchdog mode control access’; see Table 6).

Eight watchdog periods are supported, from 8 ms to 4096 ms. The watchdog period is programmed via bits NWP. The selected period is valid for both Window and Timeout modes. The default watchdog period is 128 ms.

A watchdog trigger event resets the watchdog timer. A watchdog trigger event is any valid write access to the Watchdog control register. If the watchdog mode or the watchdog period have changed as a result of the write access, the new values are immediately valid.

Table 7. Watchdog configuration

Operating/watchdog mode						
FNMC (Forced Normal mode control)		0	0	0	0	1
SDMC (Software Development mode control)		x	x	0	1	x
WMC (watchdog mode control)		100 (Window)	010 (Timeout)	001 (Autonomous)	001 (Autonomous)	n.a.
SBC Operating Mode	Normal mode	Window	Timeout	Timeout	off	off
	Standby mode (RXD HIGH)[1]	Timeout	Timeout	off	off	off
	Standby mode (RXD LOW)[1]	Timeout	Timeout	Timeout	off	off
	Sleep mode	Timeout	Timeout	off	off	off
	Other modes	off	off	off	off	off

[1] RXD LOW signals a pending wake-up.

All information provided in this document is subject to legal disclaimers.

© NXP Semiconductors N.V. 2016. All rights reserved.

7.2.1.1 Watchdog control register (0x00)

Table 8. Watchdog control register (address 00h)

Bit	Symbol	Access	Value	Description
7:5	WMC	R/W		watchdog mode control:
			001[1]	Autonomous mode
			010[2]	Timeout mode
			100[3]	Window mode
4	reserved	R	-	
3:0	NWP	R/W		nominal watchdog period:
			1000	8 ms
			0001	16 ms
			0010	32 ms
			1011	64 ms
			0100[2]	128 ms
			1101	256 ms
			1110	1024 ms
			0111	4096 ms

[1] Default value if SDMC = 1 (see Section 7.2.2)

[2] Default value.

[3] Selected in Standby mode but only activated when the SBC switches to Normal mode.

The watchdog is a valuable safety mechanism, so it is critical that it is configured correctly. Two features are provided to prevent watchdog parameters being changed by mistake:

- redundant coding of configuration bits WMC and NWP
- reconfiguration protection in Normal mode

Redundant codes associated with control bits WMC and NWP ensure that a single bit error cannot cause the watchdog to be configured incorrectly (at least 2 bits must be changed to reconfigure WMC or NWP). If an attempt is made to write an invalid code to WMC or NWP (e.g. 011 or 1001 respectively), the SPI operation is abandoned and an SPI failure event is captured, if enabled (see Section 7.10).

7.2.1.2 SBC configuration control register (0x74)

Two operating modes have a major impact on the operation of the watchdog: Forced Normal mode and Software Development mode (Software Development mode is provided for test and development purposes only and is not a dedicated SBC operating mode; the UJA1169 can be in any functional operating mode with Software Development mode enabled; see Section 7.2.2). These modes are enabled and disabled via bits FNMC and SDMC respectively in the SBC configuration control register (see Table 9). Note that this register is located in the non-volatile memory area. The watchdog is disabled in Forced Normal mode (FNM). In Software Development mode (SDM), the watchdog can be disabled or activated for test and software debugging purposes.

All information provided in this document is subject to legal disclaimers.

© NXP Semiconductors N.V. 2016. All rights reserved.

Table 9. SBC configuration control register (address 74h)

Bit	Symbol	Access	Value	Description
7:6	reserved	R	-	
5:4	V1RTSUC	R/W	[1]	V1 undervoltage threshold (defined by bit V1RTC) at start-up:
			00[2]	V1 undervoltage detection at 90 % of nominal value at start-up (V1RTC = 00)
			01	V1 undervoltage detection at 80 % of nominal value at start-up (V1RTC = 01)
			10	V1 undervoltage detection at 70 % of nominal value at start-up (V1RTC = 10)
			11	V1 undervoltage detection at 60 % of nominal value at start-up (V1RTC = 11)
3	FNMC	R/W	[3]	Forced Normal mode control:
			0	Forced Normal mode disabled
			1[2]	Forced Normal mode enabled
2	SDMC	R/W		Software Development mode control:
			0[2]	Software Development mode disabled
			1	Software Development mode enabled
1	reserved	R	-	
0	SLPC	R/W		Sleep control:
			0[2]	Sleep mode commands accepted
			1	Sleep mode commands ignored

[1] The V1 undervoltage threshold is fixed at 90 % in the UJA1169TK/3 and UJA1169TK/F/3, regardless of the setting of bit V1RTSUC.

[2] Factory preset value.

[3] FNMC settings overrule SDMC.

7.2.1.3 Watchdog status register (0x05)

Information on the status of the watchdog is available from the Watchdog status register (Table 10). This register also indicates whether Forced Normal and Software Development modes are active.

Table 10. Watchdog status register (address 05h)

Bit	Symbol	Access	Value	Description
7:4	reserved	R	-	
3	FNMS	R/W		Forced Normal mode status:
			0	SBC is not in Forced Normal mode
			1	SBC is in Forced Normal mode
2	SDMS	R/W		Software Development mode status:
			0	SBC is not in Software Development mode
			1	SBC is in Software Development mode

All information provided in this document is subject to legal disclaimers.

© NXP Semiconductors N.V. 2016. All rights reserved.

Table 10. Watchdog status register (address 05h) *...continued*

Bit	Symbol	Access	Value	Description
1:0	WDS	R		watchdog status:
			00	watchdog is off
			01	watchdog is in first half of the nominal period
			10	watchdog is in second half of the nominal period
			11	reserved

7.2.2 Software Development mode

Software Development mode is provided to simplify the software design process. When Software Development mode is enabled, the watchdog starts up in Autonomous mode (WMC = 001) and is inactive after a system reset, overriding the default value (see Table 8). The watchdog is always off in Autonomous mode if Software Development mode is enabled (SDMC = 1; see Table 7).

However, it is possible to activate and deactivate the watchdog for test purposes by selecting Window or Timeout mode via bits WMC while the SBC is in Standby mode.

7.2.3 Watchdog behavior in Window mode

In Window mode, the watchdog can only be triggered during the second half of the watchdog period. If the watchdog overflows, or is triggered in the first half of the watchdog period (before $t_{trig(wd)1}$), a system reset is performed. After the system reset, the reset source (either ‘watchdog triggered too early’ or ‘watchdog overflow’) can be read via the reset source status bits (RSS) in the Main Status register (Table 6). If the watchdog is triggered in the second half of the watchdog period (after $t_{trig(wd)1}$ but before $t_{trig(wd)2}$), the watchdog timer is restarted.

7.2.4 Watchdog behavior in Timeout mode

In Timeout mode, the watchdog timer can be reset at any time by a watchdog trigger. If the watchdog overflows, a watchdog failure event (WDF) is captured. If a WDF is already pending when the watchdog overflows, a system reset is performed. In Timeout mode, the watchdog can be used as a cyclic wake-up source for the microcontroller when the UJA1169 is in Standby or Sleep mode. In Sleep mode, a watchdog overflow generates a wake-up event while setting WDF.

When the SBC is in Sleep mode with watchdog Timeout mode selected, a wake-up event is generated after the nominal watchdog period (NWP), setting WDF. RXD is forced LOW and V1 is turned on. The application software can then clear the WDF bit and trigger the watchdog before it overflows again.

7.2.5 Watchdog behavior in Autonomous mode

In Autonomous mode, the watchdog will not be running when the SBC is in Standby (RXD HIGH) or Sleep mode. If a wake-up event is captured, pin RXD is forced LOW to signal the event and the watchdog is automatically restarted in Timeout mode. If the SBC was in Sleep mode when the wake-up event was captured, it switches to Standby mode.

All information provided in this document is subject to legal disclaimers.

© NXP Semiconductors N.V. 2016. All rights reserved.

7.2.6 Exceptional behavior of the watchdog after writing to the Watchdog register

A successful write operation to the Watchdog control register resets the watchdog timer. Bits WDS are set to 01 and the watchdog restarts at the beginning of the watchdog period (regardless of the selected watchdog mode). However, the watchdog may restart unexpectedly in the second half of the watchdog period or a WDF interrupt may be captured under the following conditions.

Case A: When the watchdog is running in Timeout mode (see Table 7) and a new watchdog period is selected (via bits NWP) that is shorter than the existing watchdog period, one of both of the following events may occur.

Status bits WDS can be set to 10. The timer then restarts at the beginning of the second half of the watchdog period, causing the watchdog to overflow earlier than expected. This can be avoided by writing the new NWP (or NWP + WMC) code twice whenever the watchdog period needs to be changed. The write commands should be sent consecutively. The gap between the commands must be less than half of the new watchdog period.

If the watchdog is in the second half of the watchdog period when the watchdog period is changed, the timer will be reset correctly. The watchdog then restarts at the beginning of the watchdog period and WDS is set 01. However, a WDF event may be captured unexpectedly. To counteract this effect, the WDF event should be cleared by default after the new watchdog period has been selected as described above (two consecutive write commands).

Case B: If the watchdog is triggered in Timeout mode (see Table 7) at exactly the same time that WDS is set to 10, it will start up again in the second half of the watchdog period. As in Case A, this causes the watchdog to overflow earlier than expected. This behavior appears identical to an ignored watchdog trigger event and can be avoided by issuing two consecutive watchdog commands. The second command should be issued before the end of the first half of the watchdog period. Use this trigger scheme if it is possible that the watchdog could be triggered exactly in the middle of the watchdog window.

7.3 System reset

When a system reset occurs, the SBC switches to Reset mode and initiates process that generates a low-level pulse on pin RSTN. The UJA1169 can distinguish up to 13 different reset sources, as detailed in Table 6.

7.3.1 Characteristics of pin RSTN

Pin RSTN is a bidirectional open-drain low side driver with integrated pull-up resistance, as shown in Figure 4. With this configuration, the SBC can detect the pin being pulled down externally, e.g. by the microcontroller. The input reset pulse width must be at least $t_{w(rst)}$ to guarantee that external reset events are detected correctly.

All information provided in this document is subject to legal disclaimers.

© NXP Semiconductors N.V. 2016. All rights reserved.

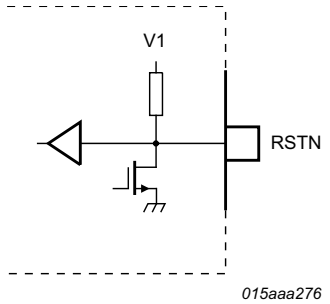

Fig 4. RSTN internal pin configuration

7.3.2 Selecting the output reset pulse width

The duration of the output reset pulse is selected via bits RLC in the Start-up control register (Table 11). The SBC distinguishes between a cold start and a warm start. A cold start is performed if the reset event was combined with a V1 undervoltage event (power-on reset, reset during Sleep mode, over-temperature reset, V1 undervoltage before entering or while in Reset mode). The setting of bits RLC determines the output reset pulse width for a cold start.

A warm start is performed if any other reset event occurs without a V1 undervoltage (external reset, watchdog failure, watchdog change attempt in Normal mode, illegal Sleep mode command). The SBC uses the shortest reset length ($t_{w(rst)}$ as defined when RLC = 11).

7.3.2.1 Start-up control register (0x73)

Table 11. Start-up control register (address 73h)

Bit	Symbol	Access	Value	Description
7:6	reserved	R	-	
5:4	RLC	R/W		RSTN output reset pulse width:
			00[1]	$t_{w(rst)}$ = 20 ms to 25 ms
			01	$t_{w(rst)}$ = 10 ms to 12.5 ms
			10	$t_{w(rst)}$ = 3.6 ms to 5 ms
			11	$t_{w(rst)}$ = 1 ms to 1.5 ms
3	V2SUC[2] VEXTSUC[3]	R/W		V2/VEXT start-up control:
			0[1]	bits V2C/VEXTC set to 00 at power-up
			1	bits V2C/VEXTC set to 11 at power-up
2:0	reserved	R	-	

[1] Factory preset value.

[2] UJA1169TK, UJA1169TK/3, UJA1169TK/F and UJA1169TK/F/3 only.

[3] UJA1169TK/X and UJA1169TK/X/F only.

7.4 Global temperature protection

The temperature of the UJA1169 is monitored continuously, except in Sleep and Off modes. The SBC switches to Overtemp mode if the temperature exceeds the overtemperature protection activation threshold, $T_{th(act)otp}$. In addition, pin RSTN is driven

All information provided in this document is subject to legal disclaimers.

© NXP Semiconductors N.V. 2016. All rights reserved.

LOW and V1, V2/VEXT and the CAN transceiver are switched off (if the optional external PNP transistor is connected, it will also be; see Section 7.5.2). When the temperature drops below the overtemperature protection release threshold, $T_{th(rel)otp}$, the SBC switches to Standby mode via Reset mode.

In addition, the UJA1169 provides an overtemperature warning. When the IC temperature rises about the overtemperature warning threshold ($T_{th(warn)otp}$), status bit OTWS is set and an overtemperature warning event is captured (OTW = 1).

7.5 Power supplies

7.5.1 Battery supply voltage (V_{BAT})

The internal circuitry is supplied from the battery via pin BAT. The device must be protected against negative supply voltages, e.g. by using an external series diode. If V_{BAT} falls below the power-off detection threshold, $V_{th(det)poff}$, the SBC switches to Off mode. However, in the 5 V variants, the microcontroller supply voltage (V1) remains active until V_{BAT} falls below 2 V, ensuring memory in the connected microcontroller remains active for as long as possible (RAM retention feature; not available in the 3.3 V variants).

The SBC switches from Off mode to Reset mode $t_{startup}$ after the battery voltage rises above the power-on detection threshold, $V_{th(det)pon}$. Power-on event status bit PO is set to 1 to indicate the UJA1169 has powered up and left Off mode (see Table 26).

7.5.2 Voltage regulator V1

The UJA1169 provides a 5 V or 3.3 V supply (V1), depending on the variant. V1 can deliver up to 250 mA load current. In the UJA1169TK/X and UJA1169TK/X/F variants, the CAN transceiver is supplied internally via V1, reducing the output current available for external components.

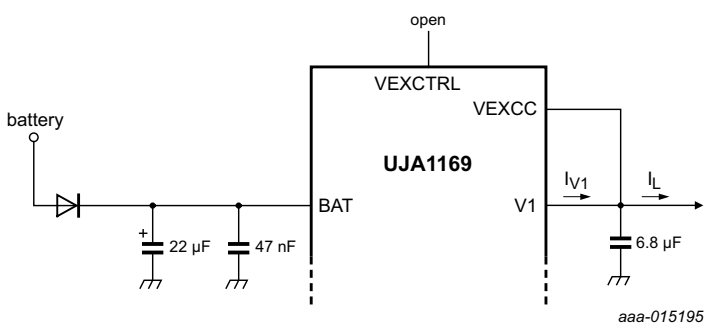

Fig 5. Typical application without external PNP (showing example component values)

To prevent the device overheating at high ambient temperatures or high average currents, an external PNP transistor can be connected as illustrated in Figure 6. In this configuration, the power dissipation is distributed between the SBC (I_{V1}) and the PNP transistor (I_{PNP}).

The PNP transistor is activated when the load current reaches the PNP activation threshold, $I_{th(act)PNP}$. Bit PDC in the Regulator control register (Table 12) is used to regulate how power dissipation is distributed.

All information provided in this document is subject to legal disclaimers.

© NXP Semiconductors N.V. 2016. All rights reserved.

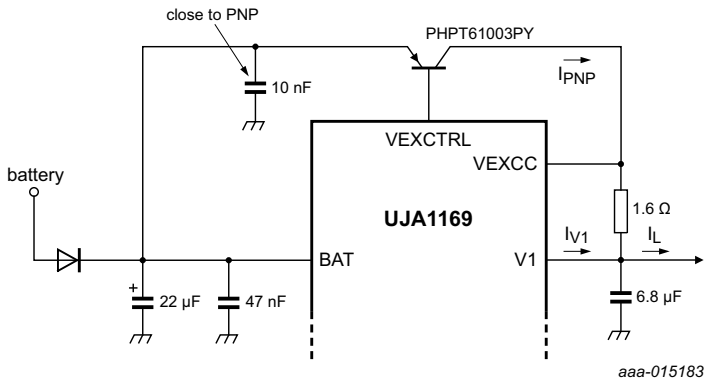

Fig 6. Typical application with external PNP (showing example component values)

For short-circuit protection, a resistor must be connected between pins V1 and VEXCC to allow the current to be monitored. This resistor limits the current delivered by the external transistor. If the voltage difference between pins VEXCC and V1 reaches $V_{th(act)Ilim}$, the PNP current limiting activation threshold voltage, the transistor current will not increase further. In general, any PNP transistor with a current amplification factor (β) of between 50 and 500 can be used.

The output voltage on V1 is monitored. A system reset is generated if the voltage on V1 drops below the selected undervoltage threshold (60 %, 70 %, 80 % or 90 % of the nominal V1 output voltage for the 5 V variants, selected via V1RTC in the Regulator control register; fixed at 90 % for the 3.3 V variants; see Table 12).

The default value of the undervoltage threshold at power-up is determined by the value of bits V1RTSUC in the SBC configuration control register (Table 9). The SBC configuration control register is in non-volatile memory, allowing the user to define the default undervoltage threshold (V1RTC) at any battery start-up.

In addition, an undervoltage warning (a V1U event; see Section 7.10) is generated if the voltage on V1 falls below 90 % of the nominal value (and V1U event detection is enabled, V1UE = 1; see Table 31). This information can be used as a warning, when the 60 %, 70 % or 80 % threshold is selected in the 5 V variants, to indicate that the level on V1 is outside the nominal supply range. The status of V1, whether it is above or below the 90 % undervoltage threshold, can be polled via bit V1S in the Supply voltage status register (Table 13).

7.5.3 Voltage regulator V2

In the UJA1169TK, UJA1169TK/3, UJA1169TK/F and UJA1169TK/F/3, pin 13 is a voltage regulator output (V2) delivering up to 100 mA.

The CAN transceiver is supplied internally from V2, consuming a portion of the available current. V2 is not protected against shorts to the battery or to negative voltages and should not be used to supply off-board components.

V2 is software controlled and must be turned on (via bit V2C in the Regulator control register; see Table 12) to activate the supply voltage for the internal CAN transceiver. V2 is not required for wake-up detection via the CAN interface.

All information provided in this document is subject to legal disclaimers.

© NXP Semiconductors N.V. 2016. All rights reserved.

The default value of V2C at power-on is defined by bits V2SUC in non-volatile memory (see Section 7.11). The actual status of V2 can be polled from the Supply voltage status register (Table 13).

7.5.4 Voltage regulator VEXT

In the UJA1169TK/X and UJA1169TK/X/F, pin 13 is a voltage regulator output (VEXT) that can be used to supply off-board components, delivering up to 100 mA. VEXT is protected against short-circuits to the battery and negative voltages. Since the CAN controller is supplied internally via V1, the full 100 mA supply current is available for off-board loads connected to VEXT (provided the thermal limits of the PCB are not exceeded).

VEXT is software controlled and must be turned on (via bit VEXTC in the Regulator control register; see Table 12) to activate the supply voltage for off-board components.

The default value of VEXTC at power-on is defined by bits VEXTSUC in non-volatile memory (see Section 7.11). The status of VEXT can be read from the Supply voltage status register (Table 13).

7.5.5 Regulator control register (0x10)

Table 12. Regulator control register (address 10h)

Bit	Symbol	Access	Value	Description
7	reserved	R	-	
6	PDC	R/W		power distribution control:
			0	V1 threshold current for activating the external PNP transistor, load current rising; $I_{th(act)PNP}$ (higher value; see Table 52) V1 threshold current for deactivating the external PNP transistor, load current falling; $I_{th(deact)PNP}$ (higher value; see Table 52)
			1	V1 threshold current for activating the external PNP transistor; load current rising; $I_{th(act)PNP}$ (lower value; see Table 52) V1 threshold current for deactivating the external PNP transistor; load current falling; $I_{th(deact)PNP}$ (lower value; see Table 52)
5:4	reserved	R	-	reserved bits can be read and overwritten without affecting device functionality; default value at power-up is 00 (other reserved bits always return 0)
3:2	V2C[1] VEXTC[2]	R/W		V2/VEXT configuration:
			00	V2/VEXT off in all modes
			01	V2/VEXT on in Normal mode
			10	V2/VEXT on in Normal, Standby and Reset modes
			11	V2/VEXT on in Normal, Standby, Sleep and Reset modes
1:0	V1RTC[3]	R/W		set V1 reset threshold:
			00	reset threshold set to 90 % of V1 nominal output voltage
			01	reset threshold set to 80 % of V1 nominal output voltage
			10	reset threshold set to 70 % of V1 nominal output voltage
			11	reset threshold set to 60 % of V1 nominal output voltage

[1] UJA1169TK, UJA1169TK/3, UJA1169TK/F and UJA1169TK/F/3: default value at power-up defined by V2SUC bit setting (see Table 11).

[2] UJA1169TK/X and UJA1169TK/X/F: default value at power-up defined by VEXTSUC bit setting (see Table 11).

[3] 5 V variants only; default value at power-up defined by setting of bits V1RTSUC (see Table 9). The threshold is fixed at 90 % in the 3.3 V variants and V1RTC always reads 00 (regardless of the value written to V1RTC or the start-up threshold defined by V1RTSUC).

All information provided in this document is subject to legal disclaimers.

© NXP Semiconductors N.V. 2016. All rights reserved.

7.5.6 Supply voltage status register (0x1B)

Table 13. Supply voltage status register (address 1Bh)

Bit	Symbol	Access	Value	Description
7:3	reserved	R	-	
2:1	V2S[1] VEXTS[2]	R/W		V2/VEXT status:
			00[3]	V2/VEXT voltage ok
			01	V2/VEXT output voltage below undervoltage threshold
			10	V2/VEXT output voltage above overvoltage threshold
			11	V2/VEXT disabled
0	V1S	R/W		V1 status:
			0[3]	V1 output voltage above 90 % undervoltage threshold
			1	V1 output voltage below 90 % undervoltage threshold

[1] UJA1169TK, UJA1169TK/3, UJA1169TK/F and UJA1169TK/F/3 only.

[2] UJA1169TK/X and UJA1169TK/X/F only.

[3] Default value at power-up.

7.6 LIMP output

The dedicated LIMP pin can be used to enable so called ‘limp home’ hardware in the event of a serious ECU failure. Detectable failure conditions include SBC overtemperature events, loss of watchdog service, short-circuits on pins RSTN or V1 and user-initiated or external reset events (see Figure 7). The LIMP pin is a battery-robust, active-LOW, open-drain output. The LIMP pin can also be forced LOW by setting bit LHC in the Fail-safe control register (Table 14).

7.6.1 Reset counter

The UJA1169 uses a reset counter to detect serious failures. The reset counter is incremented (bits RCC = RCC + 1; see Table 14) every time the SBC enters Reset mode. When the system is running correctly, it is expected that the system software will reset this counter (RCC = 00) periodically to ensure that routinely expected reset events do not cause it to overflow.

If RCC is equal to 3 when the SBC enters Reset mode, the SBC assumes that a serious failure has occurred and sets the limp-home control bit, LHC. This action forces the external LIMP pin LOW with RCC overflowing to RCC = 0. Bit LHC can also be set via the SPI interface.

The LIMP pin is set floating again if LHC is reset to 0 through software control or at power-up when the SBC leaves Off mode.

The application software can preset the counter value to define how many reset events are tolerated before the limp-home function is activated. If RCC is initialized to 3, for example, the next reset event will immediately trigger the limp-home function. The default counter setting at power-up is RCC = 00.

Besides a reset counter (RCC) overflow, the following events cause bit LHC to be set and immediately trigger the limp-home function:

- overtemperature lasting longer than $t_{d(limp)}$

All information provided in this document is subject to legal disclaimers.

© NXP Semiconductors N.V. 2016. All rights reserved.

- SBC remaining in Reset mode for longer than $t_{d(limp)}$ (e.g. because of a clamped RSTN pin or a permanent V1 undervoltage).

7.6.2 LIMP state diagram

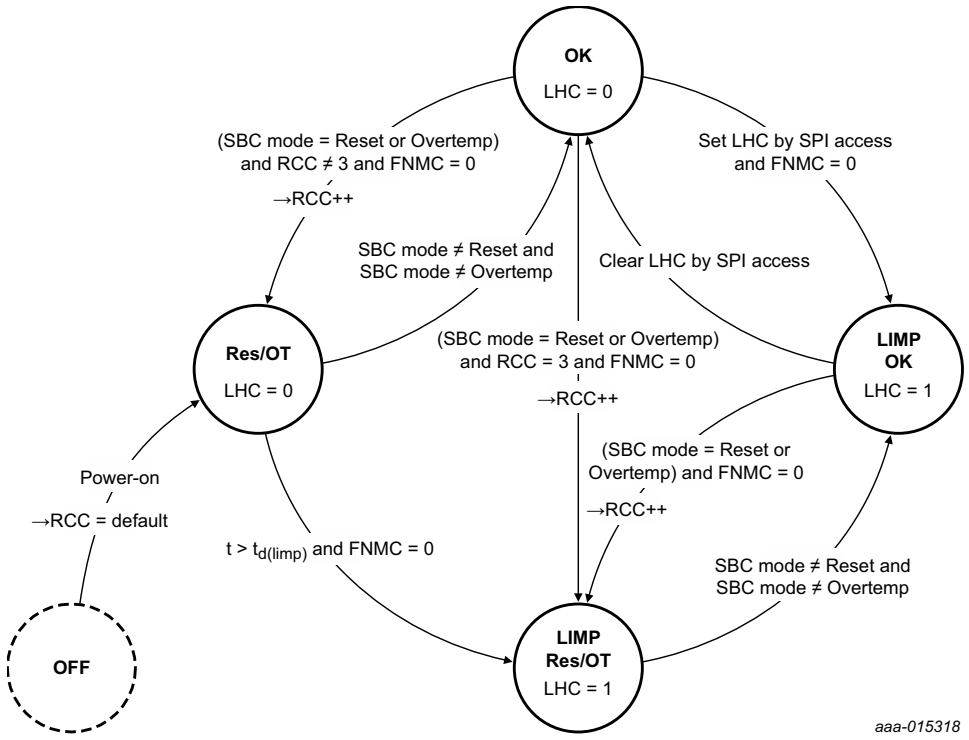

SBC modes are derived from the SBC state diagram (see Figure 3). The reset counter overflows from 3 to 0; t is the time the SBC remains continuously in Reset or Overtemp mode; time t is reset at mode entry; time t is not reset on a transition between Reset and Overtemp modes

Fig 7. Limp function state diagram

Note that the SBC always switches to Reset mode after leaving Sleep mode, since the SBC powers up V1 in response to a wake-up event. So RCC is incremented after each Sleep mode cycle. The application software needs to monitor RCC and update the value as necessary to ensure that multiple Sleep mode cycles do not cause the reset counter to overflow.

The limp-home function and the reset counter are disabled in Forced Normal mode. The LIMP pin is floating, RCC remains unchanged and bit LHC = 0.

All information provided in this document is subject to legal disclaimers.

© NXP Semiconductors N.V. 2016. All rights reserved.

7.6.2.1 Fail-safe control register (0x02)

The Fail-safe control register contains the reset counter along with limp home control settings.

Table 14. Fail-safe control register (address 02h)

Bit	Symbol	Access	Value	Description
7:3	reserved			
2	LHC	R/W		LIMP home control:
			0	LIMP pin is floating
			1	LIMP pin is driven LOW
1:0	RCC	R/W		reset counter control:
			xx	incremented every time the SBC enters Reset mode while FNMC = 0; RCC overflows from 11 to 00; default at power-on is 00

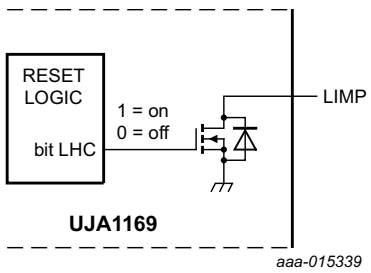

Fig 8. LIMP pin functional diagram

7.7 High-speed CAN transceiver

The integrated high-speed CAN transceiver is designed for active communication at bit rates up to 1 Mbit/s, providing differential transmit and receive capability to a CAN protocol controller. The transceiver is ISO 11898-2:201x (upcoming merged ISO 11898-2/5/6 standard) compliant. Depending on the derivative, the CAN transmitter is supplied internally from V1 (in /X variants) or V2 (in variants with a V2 regulator). Additional timing parameters defining loop delay symmetry are included to ensure reliable communication in fast phase at data rates up to 2 Mbit/s, as used in CAN FD networks.

The CAN transceiver supports autonomous CAN biasing as defined in ISO 11898-6:2013 and ISO 11898-2:201x. CANH and CANL are always biased to 2.5 V when the transceiver is in Active or Listen-only modes (CMC = 01/10/11; see Table 15).

Autonomous biasing is active in CAN Offline mode, to 2.5 V if there is activity on the bus (CAN Offline Bias mode) and to GND if there is no activity on the bus for $t > t_{to(silence)}$ (CAN Offline mode). The autonomous CAN bias voltage is derived directly from V_{BAT}.

7.7.1 CAN operating modes

The integrated CAN transceiver supports four operating modes: Active, Listen-only, Offline and Offline Bias (see Figure 9). The CAN transceiver operating mode depends on the UJA1169 operating mode and on the setting of bits CMC in the CAN control register (Table 15).

All information provided in this document is subject to legal disclaimers.

© NXP Semiconductors N.V. 2016. All rights reserved.

When the UJA1169 is in Normal mode, the CAN transceiver operating mode (Active, Listen-only or Offline) can be selected via bits CMC in the CAN control register (Table 15). When the UJA1169 is in Standby or Sleep modes, the transceiver is forced to Offline or Offline Bias mode (depending on bus activity).

7.7.1.1 CAN Active mode

In CAN Active mode, the transceiver can transmit and receive data via CANH and CANL. The differential receiver converts the analog data on the bus lines into digital data, which is output on pin RXD. The transmitter converts digital data generated by the CAN controller (input on pin TXD) into analog signals suitable for transmission over the CANH and CANL bus lines.

CAN Active mode is selected when CMC = 01 or 10.

When CMC = 01, V_{CAN} undervoltage detection is enabled and the transceiver goes to CAN Offline or CAN Offline Bias mode when the voltage at the CAN block drops below the 90 % threshold. V1 is monitored for the 90 % threshold in the /X versions; in the V2 versions, the 90 % threshold is related to the V2 supply voltage.

When CMC = 10, V_{CAN} undervoltage detection is disabled. The transmitter remains active even if the CAN supply falls below the 90 % threshold while V1 is still above the V1 reset threshold (selected via bits V1RTC).

If pin TXD is held LOW (e.g. by a short-circuit to GND) when CAN Active mode is selected via bits CMC, the transceiver does not enter CAN Active mode but switches to or remains in CAN Listen-only mode. In order to prevent a hardware and/or software application failure from driving the bus lines to an unwanted dominant state, it remains in Listen-only mode until pin TXD goes HIGH.

In CAN Active mode, the CAN bias voltage is the CAN supply voltage divided by two (depending on the derivative, the bias voltage is either V1 divided by two or V2 divided by two).

The application can determine whether the CAN transceiver is ready to transmit/receive data (CAN supply above 90 % threshold) or is disabled by reading the CAN Transceiver Status (CTS) bit in the Transceiver Status Register (Table 16).

7.7.1.2 CAN Listen-only mode

CAN Listen-only mode allows the UJA1169 to monitor bus activity while the transceiver is inactive, without influencing bus levels. The CAN transmitter is disabled in Listen-only mode, reducing current consumption. The CAN receiver and CAN biasing remain active.

7.7.1.3 CAN Offline and Offline Bias modes

In CAN Offline mode, the transceiver monitors the CAN-bus for a wake-up event, provided CAN wake-up detection is enabled (CWE = 1; see Table 32). CANH and CANL are biased to GND.

CAN Offline Bias mode is the same as CAN Offline mode, with the exception that the CAN-bus is biased to 2.5 V. This mode is activated automatically when activity is detected on the CAN-bus while the transceiver is in CAN Offline mode. If the CAN-bus is silent (no CAN-bus edges) for longer than $t_{to(silence)}$, the transceiver returns to CAN Offline mode.

All information provided in this document is subject to legal disclaimers.

© NXP Semiconductors N.V. 2016. All rights reserved.

7.7.1.4 CAN Off mode

In CAN Off mode, bus pins CANH and CANL are set floating with respect to GND, which prevents reverse currents flowing from the bus to an unsupplied ECU. The differential input resistance between CANH and CANL remains constant.

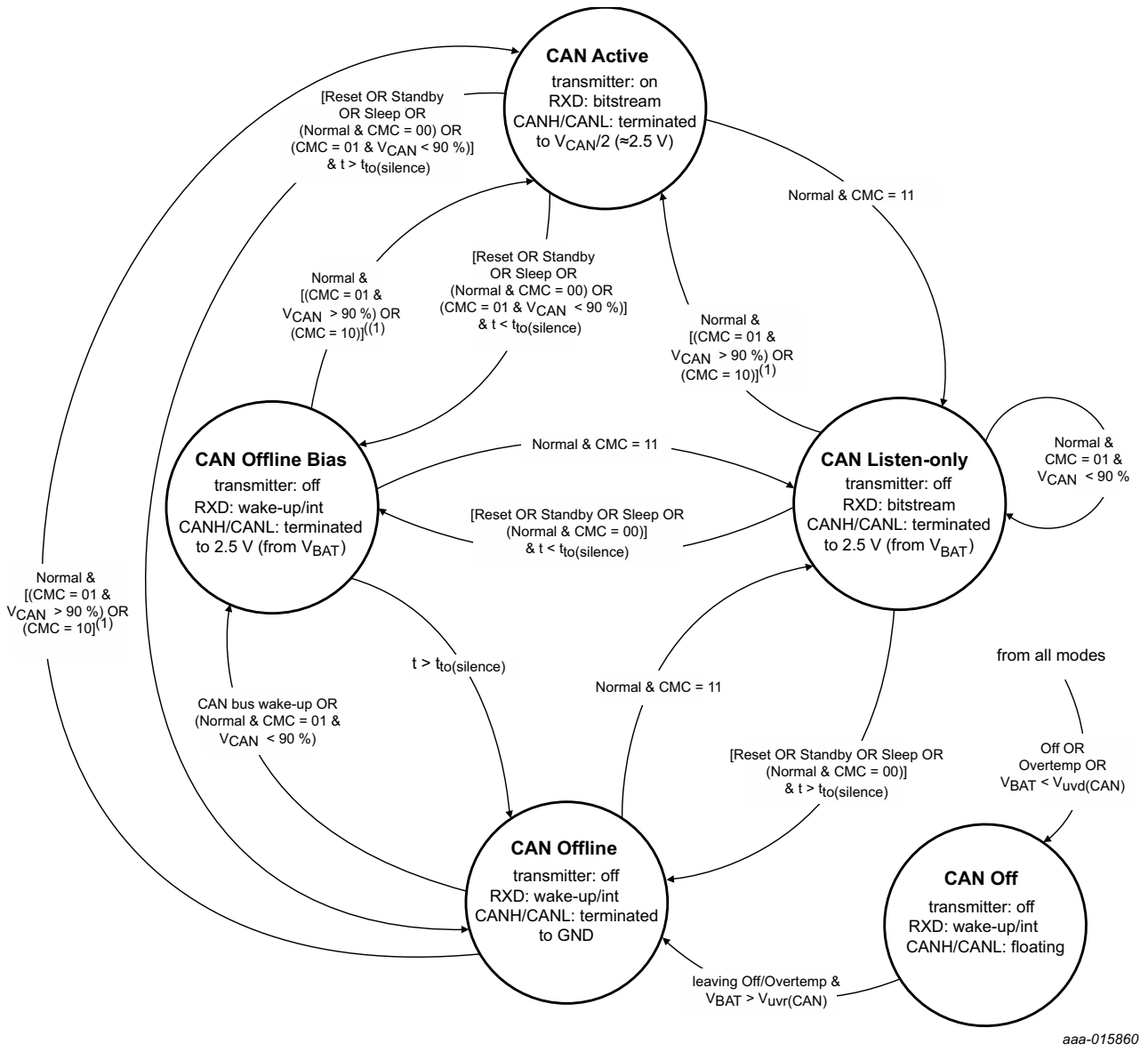

(1) To prevent the bus lines being driven to a permanent dominant state, the transceiver will not switch to CAN Active mode or CAN Listen-only mode if pin TXD is held LOW (e.g. by a short-circuit to GND)

Fig 9. CAN transceiver state machine (with FNMC = 0)

7.7.2 CAN standard wake-up (partial networking not enabled)

If the CAN transceiver is in Offline mode and CAN wake-up is enabled (CWE = 1), but CAN selective wake-up is disabled (CPNC = 0 or PNCOK = 0), the UJA1169 monitors the bus for a wake-up pattern.

All information provided in this document is subject to legal disclaimers.

© NXP Semiconductors N.V. 2016. All rights reserved.

A filter at the receiver input prevents unwanted wake-up events occurring due to automotive transients or EMI. A dominant-recessive-dominant wake-up pattern must be transmitted on the CAN-bus within the wake-up time-out time ($t_{to(wake)}$) to pass the wake-up filter and trigger a wake-up event (see Figure 10; note that additional pulses may occur between the recessive/dominant phases). The recessive and dominant phases must last at least $t_{wake(busrec)}$ and $t_{wake(busdom)}$, respectively.

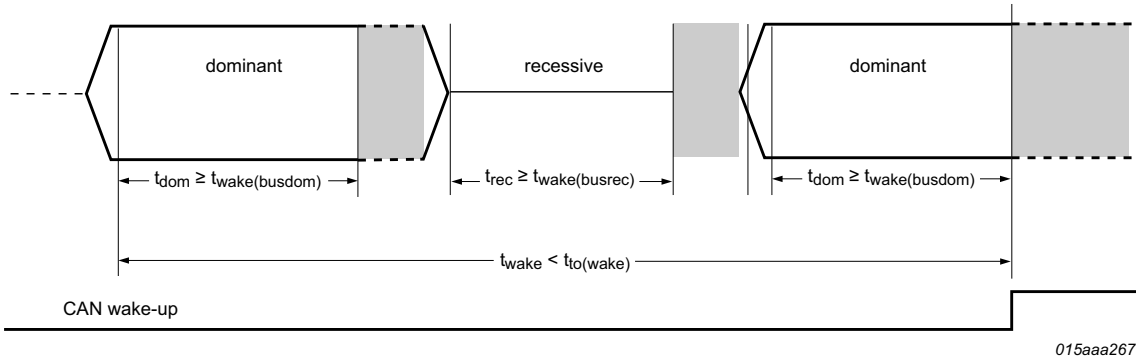

Fig 10. CAN wake-up timing

When a valid CAN wake-up pattern is detected on the bus, wake-up bit CW in the Transceiver event status register is set (see Table 28) and pin RXD is driven LOW. If the SBC was in Sleep mode when the wake-up pattern was detected, V1 is enabled to supply the microcontroller and the SBC switches to Standby mode via Reset mode.

7.7.2.1 CAN control register (0x20)

Table 15. CAN control register (address 20h)

Bit	Symbol	Access	Value	Description
7	reserved	R/W	-	
6	CFDC[1]	R/W		CAN FD control:
			0	CAN FD tolerance disabled
			1	CAN FD tolerance enabled
5	PNCOK[1]	R/W		CAN partial networking configuration OK:
			0	partial networking register configuration invalid (wake-up via standard wake-up pattern only)
			1	partial networking registers configured successfully
4	CPNC[1]	R/W		CAN partial networking control:
			0	disable CAN selective wake-up
			1	enable CAN selective wake-up
3:2	reserved	R	-	

All information provided in this document is subject to legal disclaimers.

© NXP Semiconductors N.V. 2016. All rights reserved.

Table 15. CAN control register (address 20h) *...continued*

Bit	Symbol	Access	Value	Description
1:0	CMC	R/W		CAN mode control:
			00	Offline mode
			01	Active mode (when the SBC is in Normal mode); CAN supply undervoltage detection active
			10	Active mode (when the SBC is in Normal mode); CAN supply undervoltage detection disabled
			11	Listen-only mode

[1] UJA1169TK/F and UJA1169TK/X/F only; otherwise reserved.

7.7.2.2 Transceiver status register (0x22)

Table 16. Transceiver status register (address 22h)

Bit	Symbol	Access	Value	Description
7	CTS	R		CAN transceiver status:
			0	CAN transceiver not in Active mode
			1	CAN transceiver in Active mode
6	CPNERR[1]	R		CAN partial networking error:
			0	no CAN partial networking error detected (PNFDE = 0 AND PNCOK = 1)
			1	CAN partial networking error detected (PNFDE = 1 OR PNCOK = 0; wake-up via standard wake-up pattern only)
5	CPNS[1]	R		CAN partial networking status:
			0	CAN partial networking configuration error detected (PNCOK = 0)
			1	CAN partial networking configuration ok (PNCOK = 1)
4	COSCS[1]	R		CAN oscillator status:
			0	CAN partial networking oscillator not running at target frequency
			1	CAN partial networking oscillator running at target frequency
3	CBSS	R		CAN-bus silence status:
			0	CAN-bus active (communication detected on bus)
			1	CAN-bus inactive (for longer than $t_{to(silence)}$)
2	reserved	R	-	
1	VCS[2]	R		V_{CAN} status:
			0	CAN supply voltage is above the 90 % threshold
			1	CAN supply voltage is below the 90 % threshold
0	CFS	R		CAN failure status:
			0	no TXD dominant time-out event detected
			1	CAN transmitter disabled due to a TXD dominant time-out event

[1] UJA1169TK/F and UJA1169TK/X/F only; otherwise reserved reading 0.

[2] Only active when CMC = 01.

All information provided in this document is subject to legal disclaimers.

© NXP Semiconductors N.V. 2016. All rights reserved.

7.8 CAN partial networking (UJA1169 /F variants only)

Partial networking allows nodes in a CAN network to be selectively activated in response to dedicated wake-up frames (WUF). Only nodes that are functionally required are active on the bus while the other nodes remain in a low-power mode until needed.

If both CAN wake-up (CWE = 1) and CAN selective wake-up (CPNC = 1) are enabled, and the partial networking registers are configured correctly (PNCOK = 1), the transceiver monitors the bus for dedicated CAN wake-up frames.

7.8.1 Wake-up frame (WUF)

A wake-up frame is a CAN frame according to ISO11898-1:2003, consisting of an identifier field (ID), a Data Length Code (DLC), a data field and a Cyclic Redundancy Check (CRC) code including the CRC delimiter.

The wake-up frame format, standard (11-bit) or extended (29-bit) identifier, is selected via bit IDE in the Frame control register (Table 20).

A valid WUF identifier is defined and stored in the ID registers (Table 18). An ID mask can be defined to allow a group of identifiers to be recognized as valid by an individual node. The identifier mask is defined in the ID mask registers (Table 19), where a 1 means ‘don’t care’.

In the example illustrated in Figure 11, based on the standard frame format, the 11-bit identifier is defined as 0x1A0. The identifier is stored in ID registers 2 (0x29) and 3 (0x2A). The three least significant bits of the ID mask, bits 2 to 4 of Mask register 2 (0x2D), are ‘don’t care’. This means that any of eight different identifiers will be recognized as valid in the received WUF (from 0x1A0 to 0x1A7).

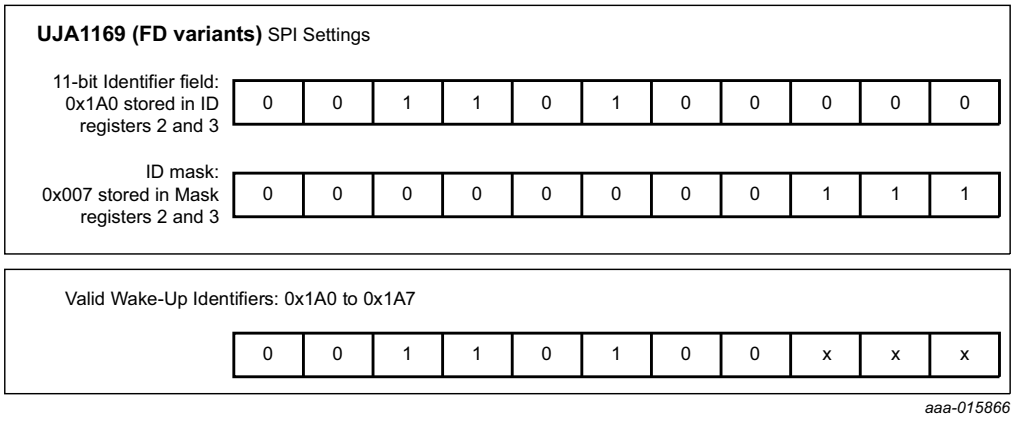

Fig 11. Evaluating the ID field in a selective wake-up frame

The data field indicates the nodes to be woken up. Within the data field, groups of nodes can be predefined and associated with bits in a data mask. By comparing the incoming data field with the data mask, multiple groups of nodes can be woken up simultaneously with a single wake-up message.

The data length code (bits DLC in the Frame control register; Table 20) determines the number of data bytes (between 0 and 8) expected in the data field of a CAN wake-up frame. If one or more data bytes are expected (DLC ≠ 0000), at least one bit in the data

All information provided in this document is subject to legal disclaimers.

© NXP Semiconductors N.V. 2016. All rights reserved.

field of the received wake-up frame must be set to 1 and at least one equivalent bit in the associated data mask register in the transceiver (see Table 21) must also be set to 1 for a successful wake-up. Each matching pair of 1s indicates a group of nodes to be activated (since the data field is up to 8 bytes long, up to 64 groups of nodes can be defined). If DLC = 0, a data field is not expected.

In the example illustrated in Figure 12, the data field consists of a single byte (DLC = 1). This means that the data field in the incoming wake-up frame is evaluated against data mask 7 (stored at address 6Fh; see Table 21 and Figure 13). Data mask 7 is defined as 10101000 in the example, indicating that the node is assigned to three groups (Group1, Group 3 and Group 5).

The received message shown in Figure 12 could, potentially, wake up four groups of nodes: groups 2, 3, 4 and 5. Two matches are found (groups 3 and 5) when the message data bits are compared with the configured data mask (DM7).

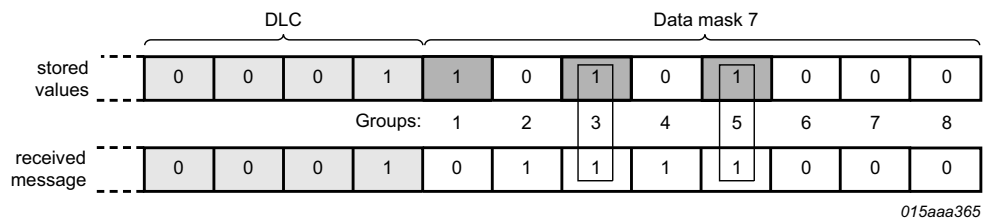

Fig 12. Evaluating the Data field in a selective wake-up frame

Optionally, the data length code and the data field can be excluded from the evaluation of the wake-up frame. If bit PNDM = 0, only the identifier field is evaluated to determine if the frame contains a valid wake-up message. If PNDM = 1 (the default value), the data field is included for wake-up filtering.

When PNDM = 0, a valid wake-up message is detected and a wake-up event is captured (and CW is set to 1) when:

- the identifier field in the received wake-up frame matches the pattern in the ID registers after filtering AND
- the CRC field in the received frame (including a recessive CRC delimiter) was received without error

When PNDM = 1, a valid wake-up message is detected when:

- the identifier field in the received wake-up frame matches the pattern in the ID registers after filtering AND
- the frame is not a Remote frame AND
- the data length code in the received message matches the configured data length code (bits DLC) AND
- if the data length code is greater than 0, at least one bit in the data field of the received frame is set and the corresponding bit in the associated data mask register is also set AND
- the CRC field in the received frame (including a recessive CRC delimiter) was received without error

All information provided in this document is subject to legal disclaimers.

© NXP Semiconductors N.V. 2016. All rights reserved.

If the UJA1169 receives a CAN message containing errors (e.g. a ‘stuffing’ error) that are transmitted in advance of the ACK field, an internal error counter is incremented. If a CAN message is received without any errors appearing in front of the ACK field, the counter is decremented. Data received after the CRC delimiter and before the next Start of Frame (SOF) is ignored by the partial networking module. If the counter overflows (counter > 31), a frame detect error is captured (PNFDE = 1) and the device wakes up; the counter is reset to zero when the bias is switched off and partial networking is re-enabled.

Partial networking is assumed to be configured correctly when PNCOK is set to 1 by the application software. The UJA1169 clears PNCOK after a write access to any of the CAN partial networking configuration registers (see Section 7.8.3).

If selective wake-up is disabled (CPNC = 0) or partial networking is not configured correctly (PNCOK = 0), and the CAN transceiver is in Offline mode with wake-up enabled (CWE = 1), then any valid wake-up pattern according to ISO 11898-2:201x (upcoming merged ISO 11898-2/5/6 standard) will trigger a wake-up event.

If the CAN transceiver is not in Offline mode (CMC $\neq$ 00) or CAN wake-up is disabled (CWE = 0), all wake-up patterns on the bus are ignored.

7.8.2 CAN FD frames

CAN FD stands for ‘CAN with Flexible Data-Rate’. It is based on the CAN protocol as specified in the upcoming ISO 11898-1:201x standard.

CAN FD is being gradually introduced into automotive market. In time, all CAN controllers will be required to comply with the new standard (enabling ‘FD-active’ nodes) or at least to tolerate CAN FD communication (enabling ‘FD-passive’ nodes). The UJA1169TK/F, UJA1169TK/F/3 and UJA1169TK/X/F support FD-passive features by means of a dedicated implementation of the partial networking protocol.

The /F variants can be configured to recognize CAN FD frames as valid CAN frames. When CFDC = 1, the error counter is decremented every time the control field of a CAN FD frame is received. The UJA1169xx/F remains in low-power mode (CAN FD-passive) with partial networking enabled. CAN FD frames are never recognized as valid wake-up frames, even if PNDM = 0 and the frame contains a valid ID. After receiving the control field of a CAN FD frame, the UJA1169xx/F ignores further bus signals until idle is again detected.

CAN FD frames are interpreted as frames with errors by the partial networking module when CFDC = 0. So the error counter is incremented when a CAN FD frame is received. If the ratio of CAN FD frames to valid CAN frames exceeds the threshold that triggers error counter overflow, bit PNFDE is set to 1 and the device wakes up.

All information provided in this document is subject to legal disclaimers.

© NXP Semiconductors N.V. 2016. All rights reserved.

7.8.3 CAN partial networking configuration registers

Dedicated registers are provided for configuring CAN partial networking.

7.8.3.1 Data rate register (0x26)

Table 17. Data rate register (address 26h)

Bit	Symbol	Access	Value	Description
7:3	reserved	R	-	
2:0	CDR	R/W		CAN data rate selection:
			000	50 kbit/s
			001	100 kbit/s
			010	125 kbit/s
			011	250 kbit/s
			100	reserved (intended for future use; currently selects 500 kbit/s)
			101	500 kbit/s
			110	reserved (intended for future use; currently selects 500 kbit/s)
			111	1000 kbit/s

7.8.3.2 ID registers (0x27 to 0x2A)

Table 18. ID registers 0 to 3 (addresses 27h to 2Ah)

Addr.	Bit	Symbol	Access	Value	Description
27h	7:0	ID07:ID00	R/W	-	bits ID07 to ID00 of the extended frame format
28h	7:0	ID15:ID08	R/W	-	bits ID15 to ID08 of the extended frame format
29h	7:2	ID23:ID18	R/W	-	bits ID23 to ID18 of the extended frame format bits ID05 to ID00 of the standard frame format
	1:0	ID17:ID16	R/W	-	bits ID17 to ID16 of the extended frame format
2Ah	7:5	reserved	R	-	
	4:0	ID28:ID24	R/W	-	bits ID28 to ID24 of the extended frame format bits ID10 to ID06 of the standard frame format

7.8.3.3 ID mask registers (0x2B to 0x2E)

Table 19. ID mask registers 0 to 3 (addresses 2Bh to 2Eh)

Addr.	Bit	Symbol	Access	Value	Description
2Bh	7:0	M07:M00	R/W	-	mask bits ID07 to ID00 of the extended frame format
2Ch	7:0	M15:M08	R/W	-	mask bits ID15 to ID08 of the extended frame format
2Dh	7:2	M23:M18	R/W	-	mask bits ID23 to ID18 of the extended frame format mask bits ID05 to ID00 of the standard frame format
	1:0	M17:M16	R/W	-	mask bits ID17 to ID16 of the extended frame format
2Eh	7:5	reserved	R	-	
	4:0	M28:M24	R/W	-	mask bits ID28 to ID24 of the extended frame format mask. bits ID10 to ID06 of the standard frame format

All information provided in this document is subject to legal disclaimers.

© NXP Semiconductors N.V. 2016. All rights reserved.

7.8.3.4 Frame control register (0x2F)

Table 20. Frame control register (address 2Fh)

Bit	Symbol	Access	Value	Description
7	IDE	R/W	-	identifier format:
			0	standard frame format (11-bit)
			1	extended frame format (29-bit)
6	PNDM	R/W	-	partial networking data mask:
			0	data length code and data field are ‘don’t care’ for wake-up
			1	data length code and data field are evaluated at wake-up
5:4	reserved	R	-	
3:0	DLC	R/W		number of data bytes expected in a CAN frame:
			0000	0
			0001	1
			0010	2
			0011	3
			0100	4
			0101	5
			0110	6
			0111	7
			1000	8
			1001 to 1111	tolerated, 8 bytes expected

7.8.3.5 Data mask registers (0x68 to 0x6F)

Table 21. Data mask registers (addresses 68h to 6Fh)

Addr.	Bit	Symbol	Access	Value	Description
68h	7:0	DM0	R/W	-	data mask 0 configuration
69h	7:0	DM1	R/W	-	data mask 1 configuration
6Ah	7:0	DM2	R/W	-	data mask 2 configuration
6Bh	7:0	DM3	R/W	-	data mask 3 configuration
6Ch	7:0	DM4	R/W	-	data mask 4 configuration
6Dh	7:0	DM5	R/W	-	data mask 5 configuration
6Eh	7:0	DM6	R/W	-	data mask 6 configuration
6Fh	7:0	DM7	R/W	-	data mask 7 configuration

All information provided in this document is subject to legal disclaimers.

© NXP Semiconductors N.V. 2016. All rights reserved.

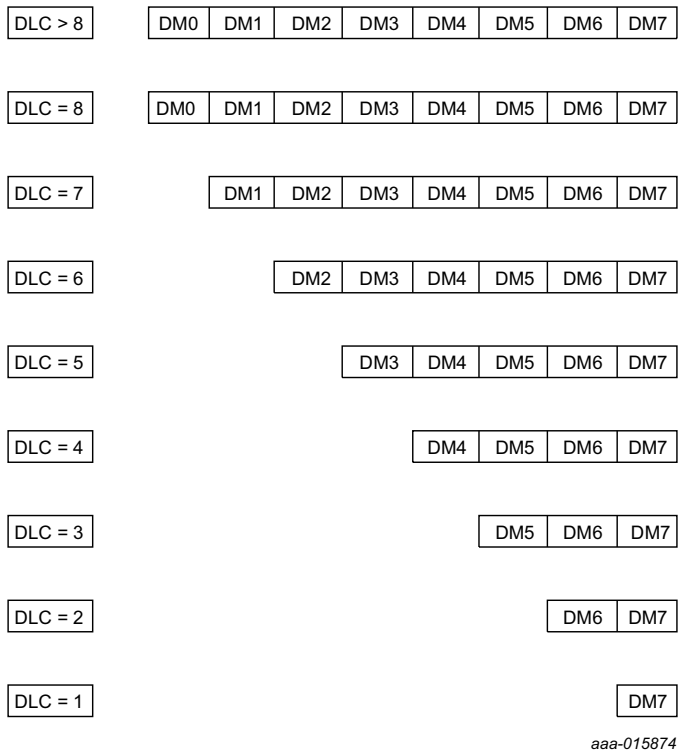

Fig 13. Data mask register usage for different values of DLC

7.9 CAN fail-safe features

7.9.1 TXD dominant time-out

A TXD dominant time-out timer is started when pin TXD is forced LOW while the transceiver is in CAN Active Mode. The transmitter is disabled if the LOW state on pin TXD persists for longer than the TXD dominant time-out time ($t_{to(dom)TXD}$), releasing the bus lines to recessive state. The TXD dominant time-out timer is reset when pin TXD goes HIGH. The TXD dominant time-out time also defines the minimum possible bit rate of 4.4 kbit/s.

When the TXD dominant time-out time is exceeded, a CAN failure event is captured (CF = 1; see Table 28), if enabled (CFE = 1; see Table 32). In addition, the status of the TXD dominant time-out can be read via the CFS bit in the Transceiver status register (Table 16) and bit CTS is cleared.

7.9.2 Pull-up on TXD pin

Pin TXD has an internal pull-up towards V1 to ensure a safe defined recessive driver state in case the pin is left floating.

7.9.3 V_{CAN} undervoltage event

A CAN failure event is captured (CF = 1), if enabled, when the supply to the CAN transceiver falls below 90 % of its nominal value. In addition, status bit VCS is set to 1.

All information provided in this document is subject to legal disclaimers.

© NXP Semiconductors N.V. 2016. All rights reserved.

7.9.4 Loss of power at pin BAT

When power is lost at pin BAT, the SBC behaves passively towards the CAN-bus pins, disabling the bias circuitry. This ensures that a loss of power at BAT does not affect ongoing communication between nodes on the network.

7.10 Wake-up and interrupt event handling

7.10.1 WAKE pin

Local wake-up is enabled via bits WPRE and WPFE in the WAKE pin event capture enable register (see Table 33). A wake-up event is triggered by a LOW-to-HIGH (if WPRE = 1) and/or a HIGH-to-LOW (if WPFE = 1) transition on the WAKE pin. This arrangement allows for maximum flexibility when designing a local wake-up circuit. In applications that do not use the local wake-up facility, local wake-up should be disabled and the WAKE pin connected to GND.

7.10.1.1 WAKE pin status register (0x4B)

Table 22. WAKE pin status register (address 4Bh)

Bit	Symbol	Access	Value	Description
7:2	reserved	R	-	
1	WPVS	R		WAKE pin status:
			0	voltage on WAKE pin below switching threshold ($V_{th(sw)}$)
			1	voltage on WAKE pin above switching threshold ($V_{th(sw)}$)
0	reserved	R	-	

While the SBC is in Normal mode, the status of the voltage on pin WAKE can always be read via bit WPVS. Otherwise, WPVS is only valid if local wake-up is enabled (WPRE = 1 and/or WPFE = 1).

7.10.2 Wake-up diagnosis

Wake-up and interrupt event diagnosis in the UJA1169 is intended to provide the microcontroller with information on the status of a range of features and functions. This information is stored in the event status registers (Table 26 to Table 28) and is signaled on pin RXD, if enabled.

A distinction is made between regular wake-up events and interrupt events.

Table 23. Regular events

Symbol	Event	Power-on	Description
CW	CAN wake-up	disabled	see Transceiver event status register (Table 28)
WPR	rising edge on WAKE pin	disabled	see WAKE pin event capture status register (Table 29)
WPF	falling edge on WAKE pin	disabled	

All information provided in this document is subject to legal disclaimers.

© NXP Semiconductors N.V. 2016. All rights reserved.

Table 24. Diagnostic events

Symbol	Event	Power-on	Description
PO	power-on	always enabled	see System event status register (Table 26)
OTW	overtemperature warning	disabled	
SPIF	SPI failure	disabled	
WDF	watchdog failure	always enabled	
V2O[1]	V2 overvoltage	disabled	see Supply event status register (Table 27)
VEXTO[2]	VEXT overvoltage	disabled	
V2U[1]	V2 undervoltage	disabled	
VEXTU[2]	VEXT undervoltage	disabled	
V1U	V1 undervoltage	disabled	
PNFDE[3]	PN frame detection error	always enabled	see Transceiver event status register (Table 28)
CBS	CAN-bus silence	disabled	
CF	CAN failure	disabled	

[1] UJA1169TK, UJA1169TK/3, UJA1169TK/F and UJA1169TK/F/3 only.

[2] UJA1169TK/X and UJA1169TK/X/F only.

[3] UJA1169TK/F, UJA1169TK/F/3 and UJA1169TK/X/F only; otherwise reserved.

PO, WDF and PNFDE interrupts are always enabled and thus captured. Wake-up and interrupt detection can be enabled/disabled for the remaining events individually via the event capture enable registers (Table 30 to Table 32).

If an event occurs while the associated event capture function is enabled, the relevant event status bit is set. If the transceiver is in CAN Offline mode with V1 active (SBC Normal or Standby mode), pin RXD is forced LOW to indicate that a wake-up or interrupt event has been detected. If the UJA1169 is in sleep mode when the event occurs, the microcontroller supply, V1, is activated and the SBC switches to Standby mode (via Reset mode).

The microcontroller can monitor events via the event status registers. An extra status register, the Global event status register (Table 25), is provided to help speed up software polling routines. By polling the Global event status register, the microcontroller can quickly determine the type of event captured (system, supply, transceiver or WAKE pin) and then query the relevant event status register (Table 26, Table 27, Table 28 or Table 29 respectively).

After the event source has been identified, the status flag should be cleared (set to 0) by writing 1 to the relevant bit (writing 0 will have no effect). A number of status bits can be cleared in a single write operation by writing 1 to all relevant bits.

Only clear the status bits that were set to 1 when the status registers were last read. This precaution ensures that events triggered just before the write access are not lost.

7.10.3 Interrupt/wake-up delay

If interrupt or wake-up events occur very frequently while the transceiver is in CAN Offline mode, they can have a significant impact on the software processing time (because pin RXD is repeatedly driven LOW, requiring a response from the microcontroller each time an interrupt/wake-up is generated). The UJA1169 incorporates an event delay timer to limit the disturbance to the software.

All information provided in this document is subject to legal disclaimers.

© NXP Semiconductors N.V. 2016. All rights reserved.

When one of the event capture status bits is cleared, pin RXD is released (HIGH) and a timer is started. If further events occur while the timer is running, the relevant status bits are set. If one or more events are pending when the timer expires after $t_{d(event)}$, pin RXD goes LOW again to alert the microcontroller. In this way, the microcontroller is interrupted once to process a number of events rather than several times to process individual events.

If all events are cleared while the timer is running, RXD remains HIGH after the timer expires, since there are no pending events. The event capture registers can be read at any time.

The event capture delay timer is stopped immediately when pin RSTN goes low (triggered by a HIGH-to-LOW transition on the pin). RSTN is driven LOW when the SBC enters Reset, Sleep, Overtemp and Off modes. A pending event is signaled on pin RXD when the SBC enters Sleep mode.

7.10.4 Sleep mode protection

The wake-up event capture function is critical when the UJA1169 is in Sleep mode, because the SBC only leaves Sleep mode in response to a captured wake-up event. To avoid potential system deadlocks, the SBC distinguishes between regular and diagnostic events (see Section 7.10). Wake-up events (via the CAN-bus or the WAKE pin) are classified as regular events; diagnostic events signal failure/error conditions or state changes. At least one regular wake-up event must be enabled before the UJA1169 can switch to Sleep mode. Any attempt to enter Sleep mode while all regular wake-up events are disabled triggers a system reset.

Another condition that must be satisfied before the UJA1169 can switch to Sleep mode is that all event status bits must be cleared. If an event is pending when the SBC receives a Sleep mode command (MC = 001), it immediately switches to Reset mode. This condition applies to both regular and diagnostic events.

Sleep mode can be permanently disabled in applications where, for safety reasons, the supply voltage to the host controller must never be cut off. Sleep mode is permanently disabled by setting the Sleep control bit (SLPC) in the SBC configuration register (see Table 9) to 1. This register is located in the non-volatile memory area of the device. When SLPC = 1, a Sleep mode SPI command (MC = 001) triggers an SPI failure event instead of a transition to Sleep mode.

All information provided in this document is subject to legal disclaimers.

© NXP Semiconductors N.V. 2016. All rights reserved.

7.10.5 Event status and event capture registers

After an event source has been identified, the status flag should be cleared (set to 0) by writing 1 to the relevant status bit (writing 0 will have no effect).

7.10.5.1 Event status registers (0x60 to 0x64)

Table 25. Global event status register (address 60h)

Bit	Symbol	Access	Value	Description
7:4	reserved	R	-	
3	WPE	R		WAKE pin event:
			0	no pending WAKE pin event
			1	WAKE pin event pending at address 0x64
2	TRXE	R		transceiver event:
			0	no pending transceiver event
			1	transceiver event pending at address 0x63
1	SUPE	R		supply event:
			0	no pending supply event
			1	supply event pending at address 0x62
0	SYSE	R		system event:
			0	no pending system event
			1	system event pending at address 0x61

Table 26. System event status register (address 61h)

Bit	Symbol	Access	Value	Description
7:5	reserved	R	-	
4	PO	R/W		power-on:
			0	no recent battery power-on
			1	the UJA1169 has left Off mode after battery power-on
3	reserved	R	-	
2	OTW	R/W		overtemperature warning:
			0	overtemperature not detected
			1	the global chip temperature has exceeded the overtemperature warning threshold, $T_{th(warn)otp}$ (not in Sleep mode)
1	SPIF	R/W		SPI failure:
			0	no SPI failure detected
			1	SPI clock count error (only 16-, 24- and 32-bit commands are valid), illegal WMC, NWP or MC code or attempted write access to locked register (not in Sleep mode)

All information provided in this document is subject to legal disclaimers.

© NXP Semiconductors N.V. 2016. All rights reserved.

Table 26. System event status register (address 61h) *...continued*

Bit	Symbol	Access	Value	Description
0	WDF	R/W		watchdog failure:
			0	no watchdog failure event captured
			1	watchdog overflow in Window or Timeout mode or watchdog triggered too early in Window mode; a system reset is triggered immediately in response to a watchdog failure in Window mode; when the watchdog overflows in Timeout mode, a system reset is only performed if a WDF is already pending (WDF = 1)

Table 27. Supply event status register (address 62h)

Bit	Symbol	Access	Value	Description
7:3	reserved	R	-	
2	V2O[1]/ VEXTO[2]	R/W		V2/VEXT overvoltage:
			0	no V2/VEXT overvoltage event captured
			1	V2/VEXT overvoltage event captured
1	V2U[1]/ VEXTU[2]	R/W		V2/VEXT undervoltage:
			0	no V2/VEXT undervoltage event captured
			1	V2/VEXT undervoltage event captured
0	V1U	R/W		V1 undervoltage:
			0	no V1 undervoltage event captured
			1	voltage on V1 has dropped below the 90 % undervoltage threshold while V1 is active (event is not captured in Sleep mode because V1 is off); V1U event capture is independent of the setting of bits V1RTC

[1] UJA1169TK, UJA1169TK/3, UJA1169TK/F and UJA1169TK/F/3 only.

[2] UJA1169TK/X and UJA1169TK/X/F only.

Table 28. Transceiver event status register (address 63h)

Bit	Symbol	Access	Value	Description
7:6	reserved	R	-	
5	PNFDE	R/W		partial networking frame detection error:
			0	no partial networking frame detection error detected
			1	partial networking frame detection error detected
4	CBS	R/W		CAN-bus status:
			0	CAN-bus active
			1	no activity on CAN-bus for $t_{to(silence)}$ (detected only when CBSE = 1 while bus active)
3:2	reserved	R	-	

All information provided in this document is subject to legal disclaimers.

© NXP Semiconductors N.V. 2016. All rights reserved.

Table 28. Transceiver event status register (address 63h) *...continued*

Bit	Symbol	Access	Value	Description
1	CF	R/W		CAN failure:
			0	no CAN failure detected
			1	CAN transceiver deactivated due to V_{CAN} undervoltage OR dominant clamped TXD (not in Sleep mode)
0	CW	R/W		CAN wake-up:
			0	no CAN wake-up event detected
			1	CAN wake-up event detected while the transceiver is in CAN Offline Mode

Table 29. WAKE pin event status register (address 64h)

Bit	Symbol	Access	Value	Description
7:2	reserved	R	-	
1	WPR	R/W		WAKE pin rising edge:
			0	no rising edge detected on WAKE pin
			1	rising edge detected on WAKE pin
0	WPF	R/W		WAKE pin falling edge:
			0	no falling edge detected on WAKE pin
			1	falling edge detected on WAKE pin

7.10.5.2 Event capture enable registers (0x04, 0x1C, 0x23, 0x4C)

Table 30. System event capture enable register (address 04h)

Bit	Symbol	Access	Value	Description
7:3	reserved	R	-	
2	OTWE	R/W		overtemperature warning enable:
			0	overtemperature warning disabled
			1	overtemperature warning enabled
1	SPIFE	R/W		SPI failure enable:
			0	SPI failure detection disabled
			1	SPI failure detection enabled
0	reserved	R	-	

Table 31. Supply event capture enable register (address 1Ch)

Bit	Symbol	Access	Value	Description
7:3	reserved	R	-	
2	V2OE[1]/ VEXTOE[2]	R/W		V2/VEXT overvoltage enable:
			0	V2/VEXT overvoltage detection disabled
			1	V2/VEXT overvoltage detection enabled
1	V2UE[1]/ VEXTUE[2]	R/W		V2/VEXT undervoltage enable:
			0	V2/VEXT undervoltage detection disabled
			1	V2/VEXT undervoltage detection enabled

All information provided in this document is subject to legal disclaimers.

© NXP Semiconductors N.V. 2016. All rights reserved.

Table 31. Supply event capture enable register (address 1Ch) *...continued*

Bit	Symbol	Access	Value	Description
0	V1UE	R/W		V1 undervoltage enable:
			0	V1 undervoltage detection disabled
			1	V1 undervoltage detection enabled

[1] UJA1169TK, UJA1169TK/3, UJA1169TK/F and UJA1169TK/F/3 only.

[2] UJA1169TK/X and UJA1169TK/X/F only.

Table 32. Transceiver event capture enable register (address 23h)

Bit	Symbol	Access	Value	Description
7:5	reserved	R	-	
4	CBSE	R/W		CAN-bus silence enable:
			0	CAN-bus silence detection disabled
			1	CAN-bus silence detection enabled
3:2	reserved	R	-	
1	CFE	R/W		CAN failure enable:
			0	CAN failure detection disabled
			1	CAN failure detection enabled
0	CWE	R/W		CAN wake-up enable:
			0	CAN wake-up detection disabled
			1	CAN wake-up detection enabled

Table 33. WAKE pin event capture enable register (address 4Ch)

Bit	Symbol	Access	Value	Description
7:2	reserved	R	-	
1	WPRE	R/W		WAKE pin rising-edge enable:
			0	rising-edge detection on WAKE pin disabled
			1	rising-edge detection on WAKE pin enabled
0	WPFE	R/W		WAKE pin falling-edge enable:
			0	falling-edge detection on WAKE pin disabled
			1	falling-edge detection on WAKE pin enabled

7.11 Non-volatile SBC configuration

The UJA1169 contains Multiple Time Programmable Non-Volatile (MTPNV) memory cells that allow some of the default device settings to be reconfigured. The MTPNV memory address range is from 0x73 to 0x74. For details, see Table 9 and Table 11.

7.11.1 Programming MTPNV cells

NXP delivers the UJA1169 in so-called ‘Forced Normal’ mode, also referred to as the ‘factory preset’ configuration. In order to change the default settings, the device must be in Forced Normal mode with FNMC = 1 and NVMPS = 1. In Forced Normal mode, the watchdog is disabled, all regulators are on and the CAN transceiver is in Active mode.

All information provided in this document is subject to legal disclaimers.

© NXP Semiconductors N.V. 2016. All rights reserved.

If the device has been programmed previously, the factory presets may need to be restored before reprogramming can begin (see Section 7.11.2). When the factory presets have been restored successfully, a system reset is generated automatically and UJA1169 switches back to Forced Normal mode.

Programming of the non-volatile memory (NVM) registers is performed in two steps. First, the required values are written to addresses 0x73 and 0x74. In the second step, reprogramming is confirmed by writing the correct CRC value to the MTPNV CRC control register (see Section 7.11.1.2). The SBC starts reprogramming the MTPNV cells as soon as the CRC value has been validated. If the CRC value is not correct, reprogramming is aborted. On completion, a system reset is generated to indicate that the MTPNV cells have been reprogrammed successfully. Note that the MTPNV cells cannot be read while they are being reprogrammed.

After an MTPNV programming cycle has been completed, the NVM is protected from being overwritten.

The MTPNV cells can be reprogrammed a maximum of 200 times ($N_{cy(W)MTP}$; see Table 52). Bit NVMPS in the MTPNV status register (Table 34) indicates whether the non-volatile cells can be reprogrammed. This register also contains a write counter, WRCNTS, that is incremented each time the MTPNV cells are reprogrammed (up to a maximum value of 111111; there is no overflow; performing a factory reset also increments the counter). This counter is provided for information purposes only; reprogramming will not be rejected when it reaches its maximum value.

An error correction code status bit, ECCS, is set to indicate the CRC check mechanism in the SBC has detected and corrected a single bit failure in non-volatile memory. If more than one bit failure is detected, the SBC will not restart after MTPNV reprogramming. Check the ECCS flag at the end of the production cycle to verify the content of non-volatile memory. When this flag is set, it indicates a device or ECU failure.

7.11.1.1 MTPNV status register (0x70)

Table 34. MTPNV status register (address 70h)

Bit	Symbol	Access	Value	Description
7:2	WRCNTS	R		write counter status:
			xxxxxx	contains the number of times the MTPNV cells were reprogrammed
1	ECCS	R/W		error correction code status:
			0	no bit failure detected in non-volatile memory
			1	bit failure detected and corrected in non-volatile memory
0	NVMPS	R/W		non-volatile memory programming status:
			0	MTPNV memory cannot be overwritten
			1[1]	MTPNV memory is ready to be reprogrammed

[1] Factory preset value.

All information provided in this document is subject to legal disclaimers.

© NXP Semiconductors N.V. 2016. All rights reserved.

7.11.1.2 MTPNV CRC control register (0x75)

The cyclic redundancy check value stored in bits CRCC in the MTPNV CRC control register is calculated using the data written to registers 0x73 and 0x74.

Table 35. MTPNV CRC control register (address 75h)

Bit	Symbol	Access	Value	Description
7:0	CRCC	R/W		cyclic redundancy check control:
			-	CRC control data

The CRC value is calculated using the data representation shown in Figure 14 and the modulo-2 division with the generator polynomial: $X^8 + X^5 + X^3 + X^2 + X + 1$. The result of this operation must be bitwise inverted.

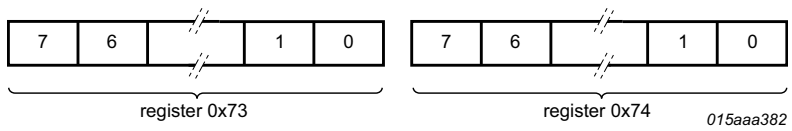

Fig 14. Data representation for CRC calculation

The following parameters can be used to calculate the CRC value (e.g. via the Autosar method):

Table 36. Parameters for CRC coding

Parameter	Value
CRC result width	8 bits
Polynomial	0x2F
Initial value	0xFF
Input data reflected	no
Result data reflected	no
XOR value	0xFF

Alternatively, the following algorithm can be used:

```
data = 0   // unsigned byte
crc = 0xFF
for i = 0 to 1
     data = content_of_address(0x73 + i) EXOR crc
     for j = 0 to 7
          if data ≥ 128
               data = data * 2  // shift left by 1
               data = data EXOR 0x2F
          else
               data = data * 2 // shift left by 1
     next j
     crc = data
next i
crc = crc EXOR 0xFF
```


All information provided in this document is subject to legal disclaimers.

© NXP Semiconductors N.V. 2016. All rights reserved.

7.11.2 Restoring factory preset values

Factory preset values are restored if the following conditions apply continuously for at least $t_{d(MTPNV)}$ during battery power-up:

- pin RSTN is held LOW
- CANH is pulled up to V_{BAT}
- CANL is pulled down to GND

After the factory preset values have been restored, the SBC performs a system reset and enters Forced normal Mode. Since the CAN-bus is clamped dominant, pin RXDC is forced LOW. Pin RXD is forced HIGH during the factory preset restore process ($t_{d(MTPNV)}$). A falling edge on RXD caused by bit PO being set after power-on indicates that the factory preset process has been completed.

Note that the write counter, WRCNTS, in the MTPNV status register is incremented every time the factory presets are restored.

7.12 Device identification

7.12.1 Device identification register (0x7E)

A byte is reserved at address 0x7E for a product identification code used to distinguish the different UJA1169 derivatives.

Table 37. Identification register (address 7Eh)

Bit	Symbol	Access	Value	Description
7:0	IDS[7:0]	R		identification status:
			CFh	UJA1169TK
			C9h	UJA1169TK/3
			EFh	UJA1169TK/F
			E9h	UJA1169TK/F/3
			CEh	UJA1169TK/X
			EEh	UJA1169TK/X/F

7.13 Register locking

Sections of the register address area can be write-protected to protect against unintended modifications. This facility only protects locked bits from being modified via the SPI and will not prevent the UJA1169 updating status registers etc.

7.13.1 Lock control register (0x0A)

Table 38. Lock control register (address 0Ah)

Bit	Symbol	Access	Value	Description
7	reserved	R	-	reserved for future use
6	LK6C	R/W		lock control 6: address area 0x68 to 0x6F - data mask (/F versions only)
			0	SPI write access enabled
			1	SPI write access disabled

All information provided in this document is subject to legal disclaimers.

© NXP Semiconductors N.V. 2016. All rights reserved.

Table 38. Lock control register (address 0Ah) *...continued*

Bit	Symbol	Access	Value	Description
5	LK5C	R/W		lock control 5: address area 0x50 to 0x5F - unused register range
			0	SPI write access enabled
			1	SPI write access disabled
4	LK4C	R/W		lock control 4: address area 0x40 to 0x4F - WAKE pin control
			0	SPI write access enabled
			1	SPI write access disabled
3	LK3C	R/W		lock control 3: address area 0x30 to 0x3F - unused register range
			0	SPI write access enabled
			1	SPI write access disabled
2	LK2C	R/W		lock control 2: address area 0x20 to 0x2F - transceiver control
			0	SPI write access enabled
			1	SPI write access disabled
1	LK1C	R/W		lock control 1: address area 0x10 to 0x1F - regulator control
			0	SPI write access enabled
			1	SPI write access disabled
0	LK0C	R/W		lock control 0: address area 0x06 to 0x09 - general-purpose memory
			0	SPI write access enabled
			1	SPI write access disabled

7.14 General-purpose memory

UJA1169 allocates 4 bytes of memory as general-purpose registers for storing user information. The general-purpose registers can be accessed via the SPI at address 0x06 to 0x09 without read or write cycle limitations (see Table 39).

7.15 SPI

7.15.1 Introduction

The Serial Peripheral Interface (SPI) provides the communication link with the microcontroller, supporting multi-slave operations. The SPI is configured for full duplex data transfer, so status information is returned when new control data is shifted in. The interface also offers a read-only access option, allowing the application to read back registers without changing the register content.

The SPI uses four interface signals for synchronization and data transfer:

- SCSN: SPI chip select; active LOW; default level is HIGH (pull-up)
- SCK: SPI clock; default level is LOW due to low-power concept (pull-down)
- SDI: SPI data input (floating input; may need external pull-up or pull-down if not available in the host controller)
- SDO: SPI data output; floating when pin SCSN is HIGH (may need external pull-up or pull-down if not available in the host controller)

All information provided in this document is subject to legal disclaimers.

© NXP Semiconductors N.V. 2016. All rights reserved.

Bit sampling is performed on the falling edge of the clock and data is shifted in/out on the rising edge, as illustrated in Figure 15.

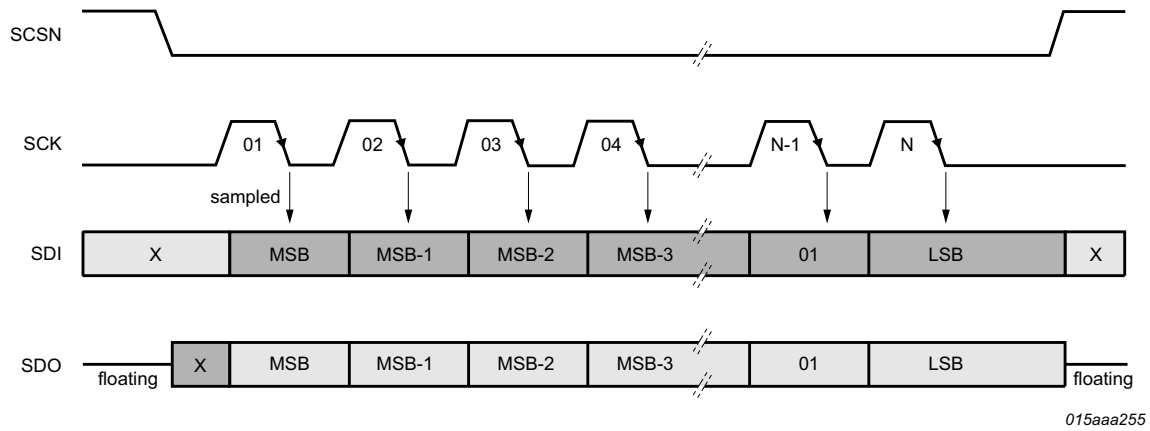

Fig 15. SPI timing overview (see Figure 19 for detailed SPI timing)

The SPI data in the UJA1169 is stored in a number of dedicated 8-bit registers. Each register is assigned a unique 7-bit address. Two bytes (16 bits) must be transmitted to the SBC for a single register read or write operation. The first byte contains the 7-bit address along with a ‘read-only’ bit (the LSB). The read-only bit must be 0 to indicate a write operation (if this bit is 1, a read operation is assumed and any data on the SDI pin is ignored). The second byte contains the data to be written to the register.

24- and 32-bit read and write operations are also supported. The register address is automatically incremented, once for a 24-bit operation and twice for a 32-bit operation, as illustrated in Figure 16.

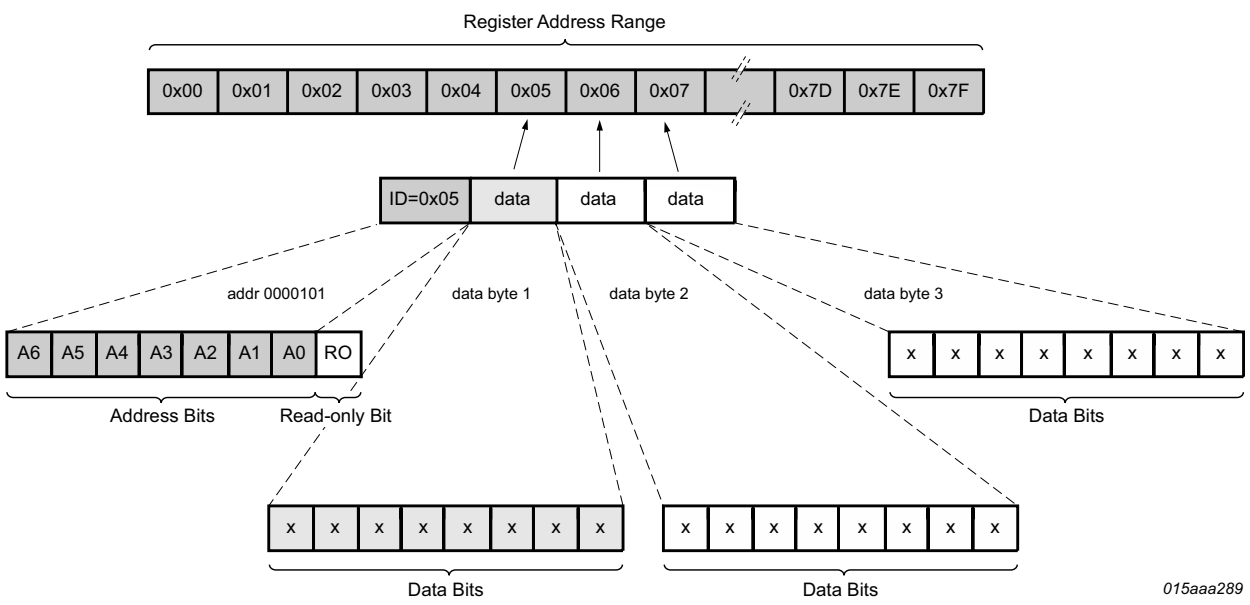

Fig 16. SPI data structure for a write operation (16-, 24- or 32-bit)

All information provided in this document is subject to legal disclaimers.

© NXP Semiconductors N.V. 2016. All rights reserved.

The contents of the addressed registers are returned via pin SDO during an SPI data read or write operation,

The UJA1169 tolerates attempts to write to registers that do not exist. If the available address space is exceeded during a write operation, the data above the valid address range is ignored (without generating an SPI failure event).

During a write operation, the UJA1169 monitors the number of SPI bits transmitted. If the number recorded is not 16, 24 or 32, then the write operation is aborted and an SPI failure event is captured (SPIF = 1).

If more than 32 bits are clocked in on pin SDI during a read operation, the data stream on SDI is reflected on SDO from bit 33 onwards.

An SPI read/write access must not be attempted for at least $t_{to(SPI)}$ after the UJA1169 exits Reset mode (positive edge on RSTN). Any earlier access may be ignored (without generating an SPI failure event).

All information provided in this document is subject to legal disclaimers.

© NXP Semiconductors N.V. 2016. All rights reserved.

7.15.2 Register map

The addressable register space contains 128 registers with addresses from 0x00 to 0x7F. An overview of the register mapping is provided in Table 39 to Table 48. The functionality of individual bits is discussed in more detail in relevant sections of the data sheet.

Table 39. Overview of primary control registers

Address	Register Name	Bit:							
		7	6	5	4	3	2	1	0
0x00	Watchdog control	WMC			reserved	NWP			
0x01	Mode control	reserved					MC		
0x02	Fail-safe control	reserved					LHC	RCC	
0x03	Main status	reserved	OTWS	NMS	RSS				
0x04	System event enable	reserved					OTWE	SPIFE	reserved
0x05	Watchdog status	reserved				FNMS	SDMS	WDS	
0x06	Memory 0	GPM[7:0]							
0x07	Memory 1	GPM[15:8]							
0x08	Memory 2	GPM[23:16]							
0x09	Memory 3	GPM[31:24]							
0x0A	Lock control	reserved	LK6C	LK5C	LK4C	LK3C	LK2C	LK1C	LK0C

Table 40. Overview of regulator control registers

Address	Register Name	Bit:							
		7	6	5	4	3	2	1	0
0x10	Regulator control	reserved[1]	PDC	reserved		V2C[2]/ VEXTC[3]		V1RTC[4]	
0x1B	Supply status	reserved					V2S[2]/VEXTS[3]		V1S
0x1C	Supply event enable	reserved					V2OE[2]/ VEXTOE[3]	V2UE[2]/ VEXTUE[3]	V1UE

[1] Reserved bits can be read and overwritten without affecting device functionality; default value at power-up is 00 (other reserved bits always return 0).

[2] UJA1169TK, UJA1169TK/3, UJA1169TK/F and UJA1169TK/F/3 only.

[3] UJA1169TK/X and UJA1169TK/X/F only.

[4] Fixed at 00 in UJA1169TK/3 and UJA1169TK/F/3.

Table 41. Overview of transceiver control and partial networking registers

Address	Register Name	Bit:							
		7	6	5	4	3	2	1	0
0x20	CAN control	reserved	CFDC[1]	PNCOK[1]	CPNC[1]	reserved		CMC	
0x22	Transceiver status	CTS	CPNERR[1]	CPNS[1]	COSCS[1]	CBSS	reserved	VCS	CFS
0x23	Transceiver event enable	reserved			CBSE	reserved		CFE	CWE
0x26	Data rate	reserved					CDR[1]		
0x27	Identifier 0	ID[7:0][1]							
0x28	Identifier 1	ID[15:8][1]							
0x29	Identifier 2	ID[23:16][1]							

All information provided in this document is subject to legal disclaimers.

© NXP Semiconductors N.V. 2016. All rights reserved.

Table 41. Overview of transceiver control and partial networking registers *...continued*

Address	Register Name	Bit:							
		7	6	5	4	3	2	1	0
0x2A	Identifier 3	reserved			ID[28:24][1]				
0x2B	Mask 0	M[7:0][1]							
0x2C	Mask 1	M[15:8][1]							
0x2D	Mask 2	M[23:16][1]							
0x2E	Mask 3	reserved			M[28:24][1]				
0x2F	Frame control	IDE[1]	PNDM[1]	reserved		DLC[1]			
0x68	Data mask 0	DM0[7:0][1]							
0x69	Data mask 1	DM1[7:0][1]							
0x6A	Data mask 2	DM2[7:0][1]							
0x6B	Data mask 3	DM3[7:0][1]							
0x6C	Data mask 4	DM4[7:0][1]							
0x6D	Data mask 5	DM5[7:0][1]							
0x6E	Data mask 6	DM6[7:0][1]							
0x6F	Data mask 7	DM7[7:0][1]							

[1] UJA1169TK/F, UJA1169TK/F/3 and UJA1169TK/X/F only; otherwise reserved.

Table 42. Overview of WAKE pin control and status registers

Address	Register Name	Bit:							
		7	6	5	4	3	2	1	0
0x4B	WAKE pin status	reserved						WPVS	reserved
0x4C	WAKE pin enable	reserved						WPRE	WPFE

Table 43. Overview of event capture registers

Address	Register Name	Bit:							
		7	6	5	4	3	2	1	0
0x60	Global event status	reserved				WPE	TRXE	SUPE	SYSE
0x61	System event status	reserved			PO	reserved	OTW	SPIF	WDF
0x62	Supply event status	reserved					V2O[1]/ VEXTO[2]	V2U[1]/ VEXTU[2]	V1U
0x63	Transceiver event status	reserved		PNFDE[3]	CBS	reserved		CF	CW
0x64	WAKE pin event status	reserved						WPR	WPF

[1] UJA1169TK, UJA1169TK/3, UJA1169TK/F and UJA1169TK/F/3 only.

[2] UJA1169TK/X and UJA1169TK/X/F only.

[3] UJA1169TK/F, UJA1169TK/F/3 and UJA1169TK/X/F only; otherwise reserved.

Table 44. Overview of MTPNV status register

Address	Register Name	Bit:							
		7	6	5	4	3	2	1	0
0x70	MTPNV status	WRCNTS						ECCS	NVMPS

All information provided in this document is subject to legal disclaimers.

© NXP Semiconductors N.V. 2016. All rights reserved.

Table 45. Overview of Start-up control register

Address	Register Name	Bit:							
		7	6	5	4	3	2	1	0
0x73	Start-up control	reserved		RLC		V2SUC[1]/ VEXTSUC[2]	reserved		

[1] UJA1169TK, UJA1169TK/3, UJA1169TK/F and UJA1169TK/F/3 only.

[2] UJA1169TK/X and UJA1169TK/X/F only.

Table 46. Overview of SBC configuration control register

Address	Register Name	Bit:							
		7	6	5	4	3	2	1	0
0x74	SBC configuration control	reserved		V1RTSUC		FNMC	SDMC	reserved	SLPC

Table 47. Overview of CRC control register

Address	Register Name	Bit:							
		7	6	5	4	3	2	1	0
0x75	MTPNV CRC control	CRCC[7:0]							

Table 48. Overview of Identification register

Address	Register Name	Bit:							
		7	6	5	4	3	2	1	0
0x7E	Identification	IDS[7:0]							

7.15.3 Register configuration in UJA1169 operating modes

A number of register bits may change state automatically when the UJA1169 switches from one operating mode to another. This feature is particularly evident when the UJA1169 switches to Off mode. These changes are summarized in Table 49. If an SPI transmission is in progress when the UJA1169 changes state, the transmission is ignored (automatic state changes have priority).

Table 49. Register bit settings in UJA1169 operating modes

Symbol	Off (power-on default)	Standby	Normal	Sleep	Overtemp	Reset
CBS	0	no change	no change	no change	no change	no change
CBSE	0	no change	no change	no change	no change	no change
CBSS	1	actual state	actual state	no change	actual state	actual state
CDR[1]	101	no change	no change	no change	no change	no change
CF	0	no change	no change	no change	no change	no change
CFDC[1]	0	no change	no change	no change	no change	no change
CFE	0	no change	no change	no change	no change	no change
CFS	0	actual state	actual state	actual state	actual state	actual state
CMC	00	no change	no change	no change	no change	no change
COSCS[1]	0	actual state	actual state	actual state	actual state	actual state
CPNC[1]	0	no change	no change	no change	no change	no change
CPNERR[1]	1	actual state	actual state	actual state	actual state	actual state

All information provided in this document is subject to legal disclaimers.

© NXP Semiconductors N.V. 2016. All rights reserved.

Table 49. Register bit settings in UJA1169 operating modes *...continued*

Symbol	Off (power-on default)	Standby	Normal	Sleep	Overtemp	Reset
CPNS[1]	0	actual state	actual state	actual state	actual state	actual state
CRCC	00000000	no change	no change	no change	no change	no change
CTS	0	0	actual state	0	0	0
CW	0	no change	no change	no change	no change	no change
CWE	0	no change	no change	no change	no change	no change
DMn[1]	11111111	no change	no change	no change	no change	no change
DLC[1]	0000	no change	no change	no change	no change	no change
ECCS	actual state	actual state	actual state	actual state	actual state	actual state
FNMC	MTPNV	MTPNV	MTPNV	MTPNV	MTPNV	MTPNV
FNMS	0	actual state	actual state	actual state	actual state	actual state
GPMn	00000000	no change	no change	no change	no change	no change
IDn	00000000	no change	no change	no change	no change	no change
IDE	0	no change	no change	no change	no change	no change
IDS	1100 1111 (TK) 1101 1111 (TK/3) 1110 1111 (TK/F) 1111 1111 (TK/F/3) 1100 1110 (TK/X) 1110 1110 (TK/X/F)	no change	no change	no change	no change	no change
LHC	0	no change	no change	no change	1 if $t > t_{d(limp)}$; otherwise no change	1 if RCC = 3 or $t > t_{d(limp)}$; otherwise no change
LKnC	0	no change	no change	no change	no change	no change
MC	100	100	111	001	don't care	100
NMS	1	no change	0	no change	no change	no change
NVMPS	actual state	actual state	actual state	actual state	actual state	actual state
NWP	0100	no change	no change	no change	0100	0100
OTW	0	no change	no change	no change	no change	no change
OTWE	0	no change	no change	no change	no change	no change
OTWS	0	actual state	actual state	actual state	actual state	actual state
PDC	0	no change	no change	no change	no change	no change
PNCOK[1]	0	no change	no change	no change	no change	no change
PNDM[1]	1	no change	no change	no change	no change	no change
PNFDE[1]	0	no change	no change	no change	no change	no change
PO	1	no change	no change	no change	no change	no change
RCC	00	no change	no change	no change	no change	RCC++
RLC	MTPNV	MTPNV	MTPNV	MTPNV	MTPNV	MTPNV
RSS	00000	no change	no change	no change	10010	reset source
SDMC	MTPNV	MTPNV	MTPNV	MTPNV	MTPNV	MTPNV
SDMS	0	actual state	actual state	actual state	actual state	actual state
SLPC	MTPNV	MTPNV	MTPNV	MTPNV	MTPNV	MTPNV

All information provided in this document is subject to legal disclaimers.

© NXP Semiconductors N.V. 2016. All rights reserved.

Table 49. Register bit settings in UJA1169 operating modes *...continued*

Symbol	Off (power-on default)	Standby	Normal	Sleep	Overtemp	Reset
SPIF	0	no change	no change	no change	no change	no change
SPIFE	0	no change	no change	no change	no change	no change
SUPE	0	no change	no change	no change	no change	no change
SYSE	1	no change	no change	no change	no change	no change
TRXE	0	no change	no change	no change	no change	no change
V1RTC	defined by V1RTSUC in 5 V variants[2]	no change	no change	no change	no change	no change
V1RTSUC	MTPNV	MTPNV	MTPNV	MTPNV	MTPNV	MTPNV
V1S	0	actual state	actual state	actual state	actual state	actual state
V1UE	0	no change	no change	no change	no change	no change
V1U	0	no change	no change	no change	no change	no change
VCS	0	actual state	actual state	actual state	actual state	actual state
V2C[3]/ VEXTC[4]	defined by V2SUC[3]/VEXTSUC[4]	no change	no change	no change	no change	no change
V2O[3]/ VEXTO[4]	0	no change	no change	no change	no change	no change
V2OE[3]/ VEXTOE[4]	0	no change	no change	no change	no change	no change
V2S[3]/ VEXTS[4]	00	actual state	actual state	actual state	actual state	actual state
V2SUC[3]/ VEXTSUC[4]	MTPNV	MTPNV	MTPNV	MTPNV	MTPNV	MTPNV
V2U[3]/ VEXTU[4]	0	no change	no change	no change	no change	no change
V2UE[3]/ VEXTUE[4]	0	no change	no change	no change	no change	no change
WDF	0	no change	no change	no change	no change	no change
WDS	0	actual state	actual state	actual state	actual state	actual state
WMC	[5]	no change	no change	no change	no change	[5]
WPE	0	no change	no change	no change	no change	no change
WPF	0	no change	no change	no change	no change	no change
WPR	0	no change	no change	no change	no change	no change
WPFE	0	no change	no change	no change	no change	no change
WPRE	0	no change	no change	no change	no change	no change
WPVS	0	no change	no change	no change	no change	no change
WRCNTS	actual state	actual state	actual state	actual state	actual state	actual state

[1] UJA1169TK/F, UJA1169TK/F/3, and UJA1169TK/X/F only; otherwise reserved.

[2] Fixed at 00 in UJA1169TK/3 and UJA1169TK/F/3.

[3] UJA1169TK, UJA1169TK/3, UJA1169TK/F and UJA1169TK/F/3 only.

[4] UJA1169TK/X and UJA1169TK/X/F only.

[5] 001 if SDMC = 1; otherwise 010.

All information provided in this document is subject to legal disclaimers.

© NXP Semiconductors N.V. 2016. All rights reserved.

8. Limiting values

Table 50. Limiting values

In accordance with the Absolute Maximum Rating System (IEC 60134).

Symbol	Parameter	Conditions		Min	Max	Unit
V_x	voltage on pin x	pin V1, V2 (UJA1169TK, UJA1169TK/3, UJA1169TK/F and UJA1169TK/F/3)	[1]	–0.3	+6	V
		pin VEXT (UJA1169TK/X, UJA1169TK/X/F)		–18	+40	V
		pins TXD, RXD, SDI, SDO, SCK, SCSN, RSTN		–0.3	V_{V1} + 0.3	V
		pin VEXCC		–0.3	+6	V
		pin WAKE		–18	+40	V
		pins LIMP, BAT, VEXCTRL		–0.3	+40	V
		pins CANH and CANL with respect to any other pin		–58	+58	V
$I_{I(LIMP)}$	input current on pin LIMP	LHC = 1		-	+20	mA
$V_{(CANH-CANL)}$	voltage between pin CANH and pin CANL			–40	+40	V
V_{trt}	transient voltage	on pins CANL, CANH; WAKE, BAT with application circuitry; VEXT coupling via 1 nF capacitor	[2]	–150	+100	V
V_{ESD}	electrostatic discharge voltage	IEC 61000-4-2 (150 pF, 330 Ω)	[3]			
		on pins CANH and CANL; pin BAT with capacitor; pin WAKE with 10 nF capacitor and 10 kΩ resistor; pin VEXT with 2.2 μF capacitor		–6	+6	kV
		Human Body Model (HBM); 100 pF, 1.5 kΩ	[4]			
		on pins CANH, CANL	[5]	–8	+8	kV
		on pins BAT, LIMP, WAKE, VEXT with application circuitry	[6]	–4	+4	kV
		on any other pin		–2	+2	kV
		Charged Device Model (CDM); field Induced charge; 4 pF	[7]			
		on any pin		–500	+500	V
T_{vj}	virtual junction temperature		[8]	–40	+150	°C
		when programming the MTPNV cells		0	+125	°C
T_{stg}	storage temperature			–55	+150	°C

[1] When the device is not powered up, I_{V1} (max) = 25 mA.

[2] Verified by an external test house to ensure that pins can withstand ISO 7637 part 2 automotive transient test pulses 1, 2a, 3a and 3b.

[3] According to IEC TS 62228 (2007), Section 4.3; DIN EN 61000-4-2.

[4] According to AEC-Q100-002.

[5] V1 and BAT connected to GND, emulating the application circuit.

[6] Only valid with the external application circuitry connected to these pins shown in Figure 20.

[7] According to AEC-Q100-011 Rev-C1. The classification level is C4B.

[8] In accordance with IEC 60747-1. An alternative definition of virtual junction temperature is: $T_{vj} = T_{amb} + P \times R_{th(j-a)}$, where $R_{th(j-a)}$ is a fixed value used in the calculation of T_{vj}. The rating for T_{vj} limits the allowable combinations of power dissipation (P) and ambient temperature (T_{amb}).

All information provided in this document is subject to legal disclaimers.

© NXP Semiconductors N.V. 2016. All rights reserved.

9. Thermal characteristics

Table 51. Thermal characteristics

Symbol	Parameter	Conditions		Typ	Unit
$R_{th(vj-a)}$	thermal resistance from virtual junction to ambient	HVSON20	[1]	33.5	K/W

[1] According to JEDEC JESD51-2, JESD51-5 and JESD51-7 at natural convection on 2s2p board. Board with two inner copper layers (thickness: 35 μm) and thermal via array under the exposed pad connected to the first inner copper layer (thickness: 70 μm).

10. Static characteristics

Table 52. Static characteristics

T_{vj} = −40 °C to +150 °C; V_{BAT} = 2.8 V to 28 V; V_{CAN} = 4.5 V to 5.5 V; V_{CAN} = V_{V1} (UJA1169TK/X, UJA1169TK/X/F); V_{CAN} = V_{V2} (UJA1169TK, UJA1169TK/3, UJA1169TK/F, UJA1169TK/F/3); $R_{(CANH-CANL)}$ = 60 Ω; all voltages are defined with respect to ground; positive currents flow into the IC; typical values are given at V_{BAT} = 13 V; unless otherwise specified.

Symbol	Parameter	Conditions	Min	Typ	Max	Unit
Supply; pin BAT						
I_{BAT}	battery supply current	Sleep mode; MC = 001; CAN Offline mode; V2/VEXT off; V_{BAT} = 7 V to 18 V; −40 °C < T_{vj} < 50 °C;	-	53	65	μA
		Standby mode; MC = 100; CAN Offline mode; V2/VEXT off; I_{V1} = 0 μA; V_{BAT} = 7 V to 18 V; −40 °C < T_{vj} < 50 °C	-	71	83	μA
		additional current with V2 on (V2C = 01/10/11); I_{V2} = 0 μA; V_{BAT} = 7 V to 18 V; −40 °C < T_{vj} < 85 °C	-	8	32	μA
		additional current with VEXT on (VEXTC = 01/10/11); I_{VEXT} = 0 μA; V_{BAT} = 7 V to 18 V; −40 °C < T_{vj} < 85 °C	-	72	81	μA
		additional current in CAN Offline Bias mode; −40 °C < T_{vj} < 85 °C	-	38	55	μA
		additional current when partial networking enabled; bus active; CPNC = 1; PNCOK = 1; −40 °C < T_{vj} < 85 °C	-	300	337	μA
		additional current from WAKE input; WPRE = WPFE = 1; −40 °C < T_{vj} < 85 °C	-	2	3	μA
		Normal mode; MC = 111; CAN Active mode; CAN recessive; V_{TXD} = V_{V1}	-	4	7.5	mA
		Normal mode; MC = 111; CAN Active mode; CAN dominant; V_{TXD} = 0 V	-	46	67	mA
$V_{th(det)pon}$	power-on detection threshold voltage	V_{BAT} rising	4.2	-	4.55	V

All information provided in this document is subject to legal disclaimers.

© NXP Semiconductors N.V. 2016. All rights reserved.

Table 52. Static characteristics *...continued*

T_{vj} = –40 °C to +150 °C; V_{BAT} = 2.8 V to 28 V; V_{CAN} = 4.5 V to 5.5 V; V_{CAN} = V_{V1} (UJA1169TK/X, UJA1169TK/X/F); V_{CAN} = V_{V2} (UJA1169TK, UJA1169TK/3, UJA1169TK/F, UJA1169TK/F/3); $R_{(CANH-CANL)}$ = 60 Ω; all voltages are defined with respect to ground; positive currents flow into the IC; typical values are given at V_{BAT} = 13 V; unless otherwise specified.

Symbol	Parameter	Conditions	Min	Typ	Max	Unit
$V_{th(det)poff}$	power-off detection threshold voltage	V_{BAT} falling	2.8	-	3	V
Voltage source: pin V1						
V_O	output voltage	$V_{O(V1)nom}$ = 5 V; V_{BAT} = 5.5 V to 28 V; I_{V1} = –200 mA to 0 mA [1]	4.9	5	5.1	V
		$V_{O(V1)nom}$ = 5 V; V_{BAT} = 5.65 V to 28 V; I_{V1} = –250 mA to 0 mA	4.9	5	5.1	V
		$V_{O(V1)nom}$ = 5 V; V_{BAT} below $V_{th(det)poff}$ and rising; $t \leq t_{startup}$; $T_{vj} \leq 125$ °C	-	-	5.5	V
		$V_{O(V1)nom}$ = 3.3 V; V_{BAT} = 3.834 V to 28 V; I_{V1} = –200 mA to 0 mA	3.234	3.3	3.366	V
		$V_{O(V1)nom}$ = 3.3 V; V_{BAT} = 3.984 V to 28 V; I_{V1} = –250 mA to 0 mA	3.234	3.3	3.366	V
$\Delta V_{ret(RAM)}$	RAM retention voltage difference	between V_{BAT} and V_{V1}; 5 V variants only				
		V_{BAT} = 2 V to 3 V; I_{V1} = –2 mA	-	-	100	mV
		V_{BAT} = 2 V to 3 V; I_{V1} = –200 μA [1]			10	mV
$R_{ON(BAT-V1)}$	ON resistance between pin BAT and pin V1	V_{BAT} = 3.25 V to 5.65 V; I_{V1} = –250 mA	-	-	3	Ω
		V_{BAT} = 2.8 V to 3.25 V; I_{V1} = –250 mA	-	-	3.2	Ω
V_{uvd}	undervoltage detection voltage	5 V variants				
		$V_{uvd(nom)}$ = 90 %	4.5	-	4.75	V
		$V_{uvd(nom)}$ = 80 %	4	-	4.25	V
		$V_{uvd(nom)}$ = 70 %	3.5		3.75	V
		$V_{uvd(nom)}$ = 60 %	3	-	3.25	V
		3.3 V variants				
		$V_{uvd(nom)}$ = 90 %	2.97	-	3.135	V
V_{uvr}	undervoltage recovery voltage	5 V variants (90 %)	4.5	-	4.75	V
		3.3 V variants (90 %)	2.97	-	3.135	V
I_{sink}	sink current	V_{BAT} = 5.65 V to 18 V	214	-	-	mA
$I_{O(sc)}$	short-circuit output current		–500	-	–250	mA
PNP base; pin VEXCTRL						
$I_{O(sc)}$	short-circuit output current	$V_{VEXCTRL} \geq 4.5$ V; V_{BAT} = 6 V to 28 V	4.2	5.8	7.5	mA

All information provided in this document is subject to legal disclaimers.

© NXP Semiconductors N.V. 2016. All rights reserved.

Table 52. Static characteristics *...continued*

T_{vj} = −40 °C to +150 °C; V_{BAT} = 2.8 V to 28 V; V_{CAN} = 4.5 V to 5.5 V; V_{CAN} = V_{V1} (UJA1169TK/X, UJA1169TK/X/F); V_{CAN} = V_{V2} (UJA1169TK, UJA1169TK/3, UJA1169TK/F, UJA1169TK/F/3); $R_{(CANH-CANL)}$ = 60 Ω; all voltages are defined with respect to ground; positive currents flow into the IC; typical values are given at V_{BAT} = 13 V; unless otherwise specified.

Symbol	Parameter	Conditions	Min	Typ	Max	Unit
$I_{th(act)PNP}$	PNP activation threshold current	load current increasing; external PNP transistor connected - see Section 7.5.2				
		PDC 0	-	-	130	mA
		PDC 0; T_{vj} = 150 °C [1]	60	83	100	mA
		PDC 1	-	-	80	mA
		PDC 1; T_{vj} = 150 °C [1]	36	50	59	mA
$I_{th(deact)PNP}$	PNP deactivation threshold current	load current falling; external PNP transistor connected - see Section 7.5.2				
		PDC 0	-	-	70	mA
		PDC 0; T_{vj} = 150 °C [1]	26	44	59	mA
		PDC 1	-	-	18	mA
		PDC 1; T_{vj} = 150 °C [1]	6	11	17	mA
$V_{th(Ictrl)PNP}$	PNP current control threshold voltage	rising edge on pin BAT	5.9	-	7.5	V
PNP collector; pin VEXCC						
$V_{th(act)Ilim}$	current limiting activation threshold voltage	measured across resistor connected between pins VEXCC and V1 (see Section 7.5.2); 2 V ≤ V_{V1} ≤ 5.5 V; 6 V < V_{BAT} < 28 V	240	-	330	mV
Voltage source: V2 (UJA1169TK, UJA1169TK/F, UJA1169TK/3 and UJA1169TK/F/3 only)						
V_O	output voltage	V_{BAT} = 5.8 V to 28 V; I_{V2} = −100 mA to 0 mA	4.9	5	5.1	V
$V_{th(uvp)}$	undervoltage protection threshold voltage	detection and recovery thresholds	4.5	-	4.75	V
$V_{th(ovp)}$	overvoltage protection threshold voltage	detection and recovery thresholds	5.2	-	5.5	V
$R_{ON(BAT-V2)}$	ON resistance between pin BAT and pin V2	V_{BAT} = 4.5 V to 5.8 V; I_{V2} = −100 mA to −5 mA	-	-	8.7	Ω
$I_{O(sc)}$	short-circuit output current		−250	-	−100	mA
Voltage source: VEXT (UJA1169TK/X and UJA1169TK/X/F only)						
V_O	output voltage	V_{BAT} = 6 V to 28 V; I_{VEXT} = −100 mA to 0 mA	4.9	5	5.1	V
$V_{th(uvp)}$	undervoltage protection threshold voltage	detection and recovery thresholds	4.5	-	4.75	V
$V_{th(ovp)}$	overvoltage protection threshold voltage	detection and recovery thresholds	5.2	-	5.5	V
$R_{ON(BAT-VEXT)}$	ON resistance between pin BAT and pin VEXT	V_{BAT} = 4.5 V to 6 V; I_{VEXT} = −100 mA to −5 mA	-	-	11	Ω
$I_{O(sc)}$	short-circuit output current		−250	-	−100	mA

All information provided in this document is subject to legal disclaimers.

© NXP Semiconductors N.V. 2016. All rights reserved.

Table 52. Static characteristics *...continued*

T_{vj} = –40 °C to +150 °C; V_{BAT} = 2.8 V to 28 V; V_{CAN} = 4.5 V to 5.5 V; V_{CAN} = V_{V1} (UJA1169TK/X, UJA1169TK/X/F); V_{CAN} = V_{V2} (UJA1169TK, UJA1169TK/3, UJA1169TK/F, UJA1169TK/F/3); $R_{(CANH-CANL)}$ = 60 Ω; all voltages are defined with respect to ground; positive currents flow into the IC; typical values are given at V_{BAT} = 13 V; unless otherwise specified.

Symbol	Parameter	Conditions	Min	Typ	Max	Unit
Limp-home output (LIMP)						
V_O	output voltage	I_{LIMP} = 0.8 mA; LHC = 1; T_{vj} = –40 °C to $T_{th(act)otp(max)}$	-	-	0.4	V
I_{LO}	output leakage current	V_{LIMP} = 0 V to 28 V; LHC = 0	–5	-	+5	μA
Serial peripheral interface inputs; pins SDI, SCK and SCSN						
$V_{th(sw)}$	switching threshold voltage		$0.25V_{V1}$	-	$0.75V_{V1}$	V
$V_{th(sw)hys}$	switching threshold voltage hysteresis		$0.05V_{V1}$	-	-	V
$R_{pd(SCK)}$	pull-down resistance on pin SCK		40	60	80	kΩ
$R_{pu(SCSN)}$	pull-up resistance on pin SCSN		40	60	80	kΩ
$I_{LI(SDI)}$	input leakage current on pin SDI	V_{SDI} = 0 V or V_{V1}	–5	-	+5	μA
C_i	input capacitance	$V_i = V_{V1}$ [1]	-	3	6	pF
Serial peripheral interface data output; pin SDO						
V_{OH}	HIGH-level output voltage	I_{OH} = –4 mA	V_{V1} – 0.4	-	-	V
V_{OL}	LOW-level output voltage	I_{OL} = 4 mA	-	-	0.4	V
$I_{LO(off)}$	off-state output leakage current	$V_{SCSN} = V_{V1}$; V_{SDO} = 0 V or V_{V1}	–5	-	+5	μA
C_o	output capacitance	SCSN = V_{V1} [1]	-	3	6	pF
CAN transmit data input; pin TXD						
$V_{th(sw)}$	switching threshold voltage		$0.25V_{V1}$	-	$0.75V_{V1}$	V
$V_{th(sw)hys}$	switching threshold voltage hysteresis		$0.05V_{V1}$	-	-	V
R_{pu}	pull-up resistance		40	60	80	kΩ
CAN receive data output; pin RXD						
V_{OH}	HIGH-level output voltage	I_{OH} = –4 mA	V_{V1} – 0.4	-	-	V
V_{OL}	LOW-level output voltage	I_{OL} = 4 mA	-	-	0.4	V
R_{pu}	pull-up resistance	CAN Offline mode	40	60	80	kΩ
Local wake input; pin WAKE						
$V_{th(sw)r}$	rising switching threshold voltage		2.8	-	4.1	V
$V_{th(sw)f}$	falling switching threshold voltage		2.4	-	3.75	V
$V_{hys(i)}$	input hysteresis voltage		250	-	800	mV
I_i	input current	T_{vj} = –40 °C to +85 °C	-	-	1.5	μA
High-speed CAN-bus lines; pins CANH and CANL						
$V_{O(dom)}$	dominant output voltage	CAN Active mode; V_{TXD} = 0 V				
		pin CANH	2.75	3.5	4.5	V
		pin CANL	0.5	1.5	2.25	V

All information provided in this document is subject to legal disclaimers.

© NXP Semiconductors N.V. 2016. All rights reserved.

Table 52. Static characteristics *...continued*

T_{vj} = −40 °C to +150 °C; V_{BAT} = 2.8 V to 28 V; V_{CAN} = 4.5 V to 5.5 V; V_{CAN} = V_{V1} (UJA1169TK/X, UJA1169TK/X/F); V_{CAN} = V_{V2} (UJA1169TK, UJA1169TK/3, UJA1169TK/F, UJA1169TK/F/3); $R_{(CANH-CANL)}$ = 60 Ω; all voltages are defined with respect to ground; positive currents flow into the IC; typical values are given at V_{BAT} = 13 V; unless otherwise specified.

Symbol	Parameter	Conditions	Min	Typ	Max	Unit
$V_{dom(TX)sym}$	transmitter dominant voltage symmetry	$V_{dom(TX)sym}$ = V_{CAN} − V_{CANH} − V_{CANL}; V_{CAN} = 5 V	−400	-	+400	mV
V_{TXsym}	transmitter voltage symmetry	V_{TXsym} = V_{CANH} + V_{CANL}; f_{TXD} = 250 kHz; C_{SPLIT} = 4.7 nF [1] [2]	0.9V_{CAN}	-	1.1V_{CAN}	V
$V_{O(dif)bus}$	bus differential output voltage	CAN Active mode (dominant); V_{TXD} = 0 V; V_{CAN} = 4.75 V to 5.5 V				
		$R_{(CANH-CANL)}$ = 50 Ω to 65 Ω	1.5	-	3.0	V
		$R_{(CANH-CANL)}$ = 45 Ω to 65 Ω	1.4	-	3.0	V
		CAN Active mode (recessive); CAN Listen-only mode; CAN Offline mode; V_{TXD} = V_{V1}; $R_{(CANH-CANL)}$ = no load	−50	-	+50	mV
$V_{O(rec)}$	recessive output voltage	CAN Active mode; V_{TXD} = V_{V1} $R_{(CANH-CANL)}$ = no load	2	0.5V_{CAN}	3	V
		CAN Offline mode; $R_{(CANH-CANL)}$ = no load	−0.1	-	+0.1	V
		CAN Offline Bias/Listen-only modes; $R_{(CANH-CANL)}$ = no load	2	2.5	3	V
$I_{O(sc)dom}$	dominant short-circuit output current	CAN Active mode; V_{TXD} = 0 V; V_{CAN} = 5 V				
		pin CANH; V_{CANH} = −3 V	−55	-	-	mA
		pin CANL; V_{CANL} = +16 V	-	-	+55	mA
$I_{O(sc)rec}$	recessive short-circuit output current	V_{CANL} = V_{CANH} = −27 V to +32 V; V_{TXD} = V_{V1}	−3	-	+3	mA
$V_{th(RX)dif}$	differential receiver threshold voltage	CAN Active/Listen-only modes; −12 V < V_{CANL} < +12 V; −12 V < V_{CANH} < +12 V	0.5	0.7	0.9	V
		CAN Offline mode; −12 V < V_{CANL} < +12 V; −12 V < V_{CANH} < +12 V	0.4	0.7	1.15	V
$V_{th(RX)dif(hys)}$	differential receiver threshold voltage hysteresis	CAN Active/Listen-only modes; −12 V < V_{CANL} < +12 V; −12 V < V_{CANH} < +12 V	50	200	400	mV
$R_{i(cm)}$	common-mode input resistance		9	15	28	kΩ
ΔR_i	input resistance deviation		−1	-	+1	%
$R_{i(dif)}$	differential input resistance	−12 V < V_{CANL} < +12 V; −12 V < V_{CANH} < +12 V	19	30	52	kΩ
$C_{i(cm)}$	common-mode input capacitance	[1]	-	-	20	pF
$C_{i(dif)}$	differential input capacitance	[1]	-	-	10	pF
I_{LI}	input leakage current	V_{BAT} = V_{CAN} = 0 V or V_{BAT} = V_{CAN} = shorted to ground via 47 kΩ; V_{CANH} = V_{CANL} = 5 V	−5	-	+5	μA

All information provided in this document is subject to legal disclaimers.

© NXP Semiconductors N.V. 2016. All rights reserved.

Table 52. Static characteristics *...continued*

T_{vj} = −40 °C to +150 °C; V_{BAT} = 2.8 V to 28 V; V_{CAN} = 4.5 V to 5.5 V; V_{CAN} = V_{V1} (UJA1169TK/X, UJA1169TK/X/F); V_{CAN} = V_{V2} (UJA1169TK, UJA1169TK/3, UJA1169TK/F, UJA1169TK/F/3); $R_{(CANH-CANL)}$ = 60 Ω; all voltages are defined with respect to ground; positive currents flow into the IC; typical values are given at V_{BAT} = 13 V; unless otherwise specified.

Symbol	Parameter	Conditions		Min	Typ	Max	Unit
$V_{uvd(CAN)}$	CAN undervoltage detection voltage	on pin BAT; V_{BAT} falling		4.2	-	4.55	V
		on V_{CAN}; see Section 7.9.3		4.5	-	4.75	V
$V_{uvr(CAN)}$	CAN undervoltage recovery voltage	V_{BAT} rising		4.5	-	5	V
		on V_{CAN}; see Section 7.9.3		4.5	-	4.75	V
$I_{DD(CAN)}$	CAN supply current	CAN Active mode; CAN recessive; V_{TXD} = V_{V1}	[3]	1	3	6	mA
		CAN Active mode; CAN dominant; V_{TXD} = 0 V; $R_{(CANH-CANL)}$ = no load	[3]	3	7.5	15	mA
Temperature protection							
$T_{th(act)otp}$	overtemperature protection activation threshold temperature			167	177	187	°C
$T_{th(rel)otp}$	overtemperature protection release threshold temperature			127	137	147	°C
$T_{th(warn)otp}$	overtemperature protection warning threshold temperature			127	137	147	°C
Reset output; pin RSTN							
V_{OL}	LOW-level output voltage	V_{V1} = 1.0 V to 5.5 V; pull-up resistor to V_{V1} ≥ 900 Ω		0	-	$0.2V_{V1}$	V
R_{pu}	pull-up resistance			40	60	80	kΩ
$V_{th(sw)}$	switching threshold voltage			$0.25V_{V1}$	-	$0.75V_{V1}$	V
$V_{th(sw)hys}$	switching threshold voltage hysteresis			$0.05V_{V1}$	-	-	V
MTP non-volatile memory							
$N_{cy(W)MTP}$	number of MTP write cycles	V_{BAT} = 6 V to 28 V; T_{vj} = 0 °C to +125 °C		-	-	200	-

[1] Not tested in production; guaranteed by design.

[2] The test circuit used to measure the bus output voltage symmetry (which includes C_{SPLIT}) is shown in Figure 22.

[3] From V1 in VEXT versions (UJA1169TK/X and UJA1169TK/X/F) and from V2 in other variants.

All information provided in this document is subject to legal disclaimers.

© NXP Semiconductors N.V. 2016. All rights reserved.

11. Dynamic characteristics

Table 53. Dynamic characteristics

T_{vj} = −40 °C to +150 °C; V_{BAT} = 2.8 V to 28 V; V_{CAN} = 4.5 V to 5.5 V; V_{CAN} = V_{V1} (UJA1169TK/X, UJA1169TK/X/F); V_{CAN} = V_{V2} (UJA1169TK, UJA1169TK/3, UJA1169TK/F, UJA1169TK/F/3); $R_{(CANH-CANL)}$ = 60 Ω; all voltages are defined with respect to ground; positive currents flow into the IC; typical values are given at V_{BAT} = 13 V; unless otherwise specified.

Symbol	Parameter	Conditions	Min	Typ	Max	Unit
Voltage source; pin V1						
$t_{startup}$	start-up time	from V_{BAT} exceeding the power-on detection threshold until V_{V1} exceeds the 90 % undervoltage threshold; C_{V1} = 4.7 µF	-	2.8	4.7	ms
$t_{d(uvd)}$	undervoltage detection delay time	V_{V1} falling	6	-	54	µs
$t_{d(uvd-RSTNL)}$	delay time from undervoltage detection to RSTN LOW	undervoltage on V1	-	-	63	µs
Voltage source; pin V2 (UJA1169TK, UJA1169TK/F, UJA1169TK/3 and UJA1169TK/F/3)/VEXT(UJA1169TK/X, UJA1169TK/X/F)						
$t_{d(uvd)}$	undervoltage detection delay time	V_{V2}/V_{VEXT} falling	6	-	32	µs
		at start-up of V_{V2}/V_{VEXT}	2.2	2.5	2.8	ms
$t_{d(ovd)}$	overvoltage detection delay time	V_{V2}/V_{VEXT} falling	6	-	32	µs
Serial peripheral interface timing; pins SCSN, SCK, SDI and SDO						
$t_{cy(clk)}$	clock cycle time		250	-	-	ns
$t_{SPILEAD}$	SPI enable lead time		50	-	-	ns
t_{SPILAG}	SPI enable lag time		50	-	-	ns
$t_{clk(H)}$	clock HIGH time		125	-	-	ns
$t_{clk(L)}$	clock LOW time		125	-	-	ns
$t_{su(D)}$	data input set-up time		50	-	-	ns
$t_{h(D)}$	data input hold time		50	-	-	ns
$t_{v(Q)}$	data output valid time	pin SDO; C_L = 20 pF	-	-	50	ns
$t_{WH(S)}$	chip select pulse width HIGH	pin SCSN	250	-	-	ns
$t_{to(SPI)}$	SPI time-out time	after leaving Reset mode; V_{V1} = 1.0 V to 5.5 V; RSTN rising edge	-	--	20	µs
$t_{d(SCKL-SCSNL)}$	delay time from SCK LOW to SCSN LOW		50	-	-	ns
CAN transceiver timing; pins CANH, CANL, TXD and RXD						
$t_{d(TXDL-RXDL)}$	delay time from TXD LOW to RXD LOW	V_{TXD} = 30 % V_{V1} to V_{RXD} = 30 % V_{V1}; C_{RXD} = 15 pF; f_{TXD} = 250 kHz; $R_{(CANH-CANL)}$ = 60 Ω; $C_{(CANH-CANL)}$ = 100 pF;	-	-	255	ns
$t_{d(TXDH-RXDH)}$	delay time from TXD HIGH to RXD HIGH	V_{TXD} = 70 % V_{V1} to V_{RXD} = 70 % V_{V1}; C_{RXD} = 15 pF; f_{TXD} = 250 kHz; $R_{(CANH-CANL)}$ = 60 Ω; $C_{(CANH-CANL)}$ = 100 pF;	-	-	255	ns

All information provided in this document is subject to legal disclaimers.

© NXP Semiconductors N.V. 2016. All rights reserved.

Table 53. Dynamic characteristics *...continued*

T_{vj} = −40 °C to +150 °C; V_{BAT} = 2.8 V to 28 V; V_{CAN} = 4.5 V to 5.5 V; V_{CAN} = V_{V1} (UJA1169TK/X, UJA1169TK/X/F); V_{CAN} = V_{V2} (UJA1169TK, UJA1169TK/3, UJA1169TK/F, UJA1169TK/F/3); $R_{(CANH-CANL)}$ = 60 Ω; all voltages are defined with respect to ground; positive currents flow into the IC; typical values are given at V_{BAT} = 13 V; unless otherwise specified.

Symbol	Parameter	Conditions	Min	Typ	Max	Unit
$t_{bit(RXD)}$	bit time on pin RXD	$t_{bit(TXD)}$ = 500 ns (see Figure 18); $R_{(CANH-CANL)}$ = 60 Ω; $C_{(CANH-CANL)}$ = 100 pF	400	-	550	ns
$t_{d(TXD-busdom)}$	delay time from TXD to bus dominant	$R_{(CANH-CANL)}$ = 60 Ω; $C_{(CANH-CANL)}$ = 100 pF; $V_{CANH} - V_{CANL}$ = 900 mV	-	80	105	ns
$t_{d(TXD-busrec)}$	delay time from TXD to bus recessive	$R_{(CANH-CANL)}$ = 60 Ω; $C_{(CANH-CANL)}$ = 100 pF; $V_{CANH} - V_{CANL}$ = 500 mV	-	80	105	ns
$t_{d(busdom-RXD)}$	delay time from bus dominant to RXD	C_{RXD} = 15 pF; V_{RXD} = 30 % V_{V1}	-	105	-	ns
$t_{d(busrec-RXD)}$	delay time from bus recessive to RXD	C_{RXD} = 15 pF; V_{RXD} = 70 % V_{V1};	-	120	-	ns
$t_{wake(busdom)}$	bus dominant wake-up time	first pulse (after first recessive) for wake-up on pins CANH and CANL; CAN Offline mode	0.5	-	3.0	µs
		second pulse for wake-up on pins CANH and CANL	0.5	-	3.0	µs
$t_{wake(busrec)}$	bus recessive wake-up time	first pulse for wake-up on pins CANH and CANL; CAN Offline mode	0.5	-	3.0	µs
		second pulse (after first dominant) for wake-up on pins CANH and CANL	0.5	-	3.0	µs
$t_{to(wake)}$	wake-up time-out time	between first and second dominant pulses; CAN Offline mode	570	-	1200	µs
$t_{to(dom)TXD}$	TXD dominant time-out time	CAN Active mode; V_{TXD} = 0 V	2.7	-	3.3	ms
$t_{to(silence)}$	bus silence time-out time	recessive time measurement started in all CAN modes	0.95	-	1.17	s
$t_{d(busact-bias)}$	delay time from bus active to bias		-	-	200	µs
$t_{startup(CAN)}$	CAN start-up time	to CTS = 1; when switching to Active mode	-	-	220	µs
Pin RXD: event capture timing (valid in CAN Offline mode only)						
$t_{d(event)}$	event capture delay time	CAN Offline mode	0.9	-	1.1	ms
t_{blank}	blanking time	when switching from Offline to Active/Listen-only mode	-	-	25	µs
Watchdog						
$t_{trig(wd)1}$	watchdog trigger time 1	Normal mode; watchdog Window mode only [2]	0.45 × NWP[3]	-	0.55 × NWP[3]	ms
$t_{trig(wd)2}$	watchdog trigger time 2	Normal/Standby mode [4]	0.9 × NWP [3]	-	1.11 × NWP[3]	ms

All information provided in this document is subject to legal disclaimers.

© NXP Semiconductors N.V. 2016. All rights reserved.

Table 53. Dynamic characteristics *...continued*

T_{vj} = −40 °C to +150 °C; V_{BAT} = 2.8 V to 28 V; V_{CAN} = 4.5 V to 5.5 V; V_{CAN} = V_{V1} (UJA1169TK/X, UJA1169TK/X/F); V_{CAN} = V_{V2} (UJA1169TK, UJA1169TK/3, UJA1169TK/F, UJA1169TK/F/3); $R_{(CANH-CANL)}$ = 60 Ω; all voltages are defined with respect to ground; positive currents flow into the IC; typical values are given at V_{BAT} = 13 V; unless otherwise specified.

Symbol	Parameter	Conditions	Min	Typ	Max	Unit
Pin RSTN: reset pulse width						
$t_{w(rst)}$	reset pulse width	output pulse width				
		RLC = 00	20	-	25	ms
		RLC = 01	10	-	12.5	ms
		RLC = 10	3.6	-	5	ms
		RLC = 11	1	-	1.5	ms
		input pulse width	18	-	-	µs
Pin LIMP						
$t_{d(limp)}$	limp delay time		117	-	145	ms
Pin WAKE						
t_{wake}	wake-up time		50	-	-	µs
MTP non-volatile memory						
$t_{d(MTPNV)}$	MTPNV delay time	before factory presets are restored; V_{BAT} = 6 V to 28 V	0.9	-	1.1	s

[1] Not tested in production; guaranteed by design.

[2] A system reset will be performed if the watchdog is in Window mode and is triggered earlier than $t_{trig(wd)1}$ after the start of the watchdog period (thus in the first half of the watchdog period).

[3] The nominal watchdog period is programmed via the NWP control bits.

[4] The watchdog will be reset if it is in window mode and is triggered after $t_{trig(wd)1}$, but not later than $t_{trig(wd)2}$, after the start of the watchdog period (thus, in the second half of the watchdog period). If the watchdog is triggered later than $t_{trig(wd)2}$ after the start of the watchdog period (watchdog overflow), a system reset will be performed.

All information provided in this document is subject to legal disclaimers.

© NXP Semiconductors N.V. 2016. All rights reserved.

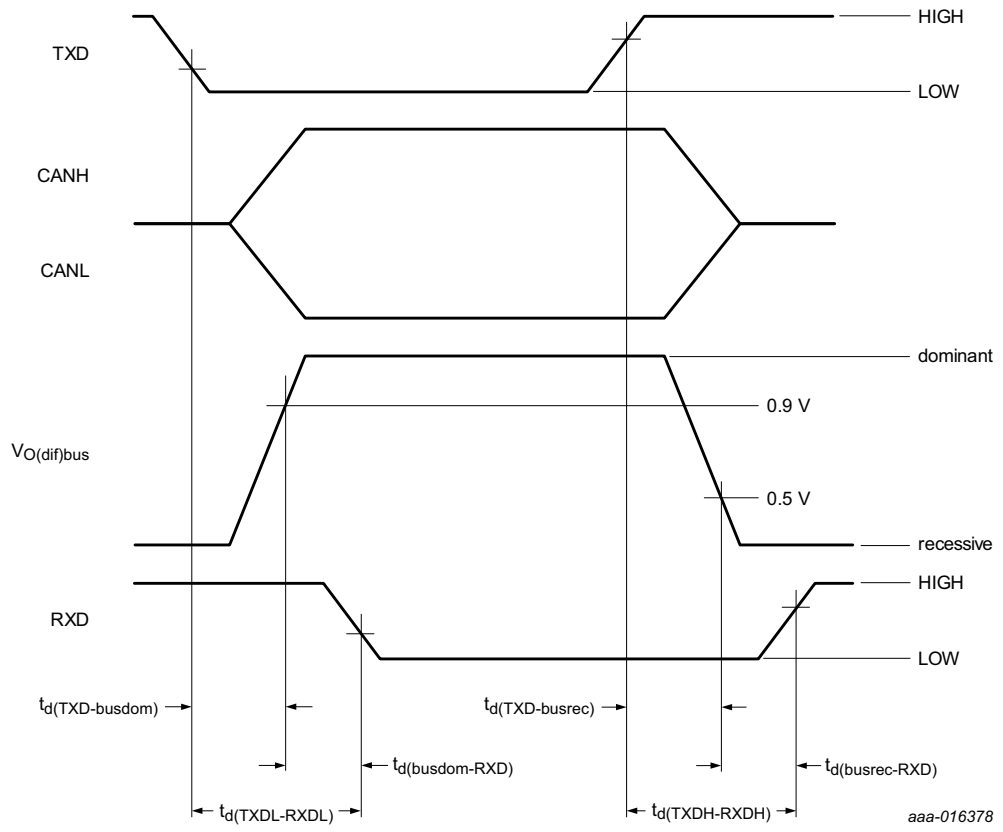

Fig 17. CAN transceiver timing diagram

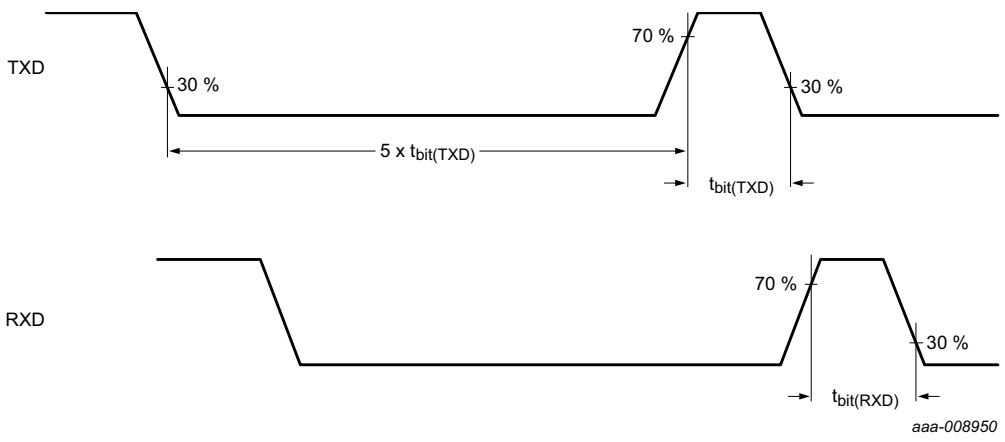

Fig 18. Loop delay symmetry timing diagram

All information provided in this document is subject to legal disclaimers.

© NXP Semiconductors N.V. 2016. All rights reserved.

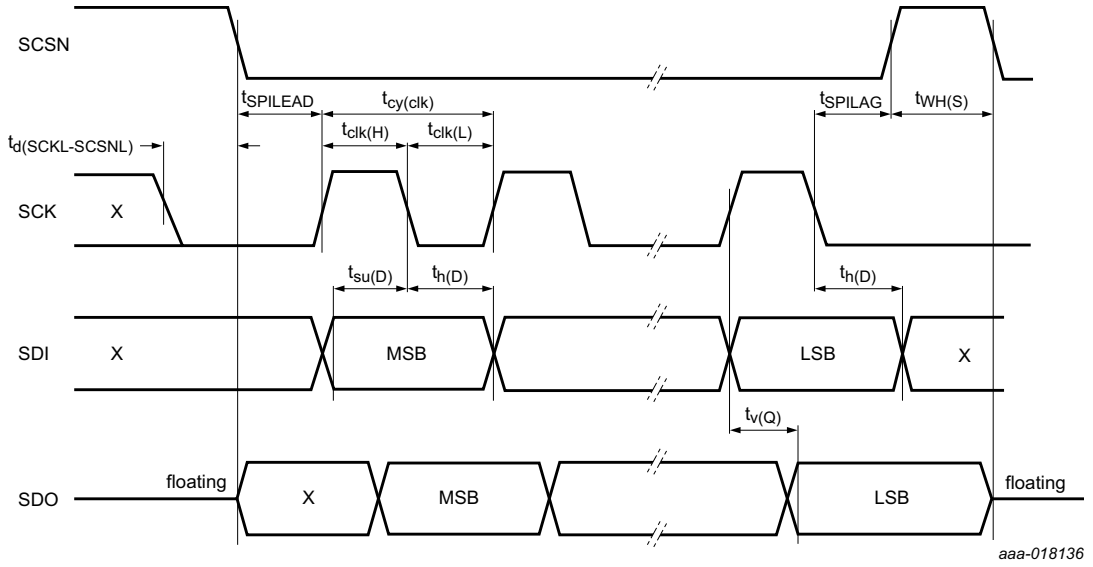

Fig 19. SPI timing diagram

All information provided in this document is subject to legal disclaimers.

© NXP Semiconductors N.V. 2016. All rights reserved.

12. Application information

12.1 Application diagram

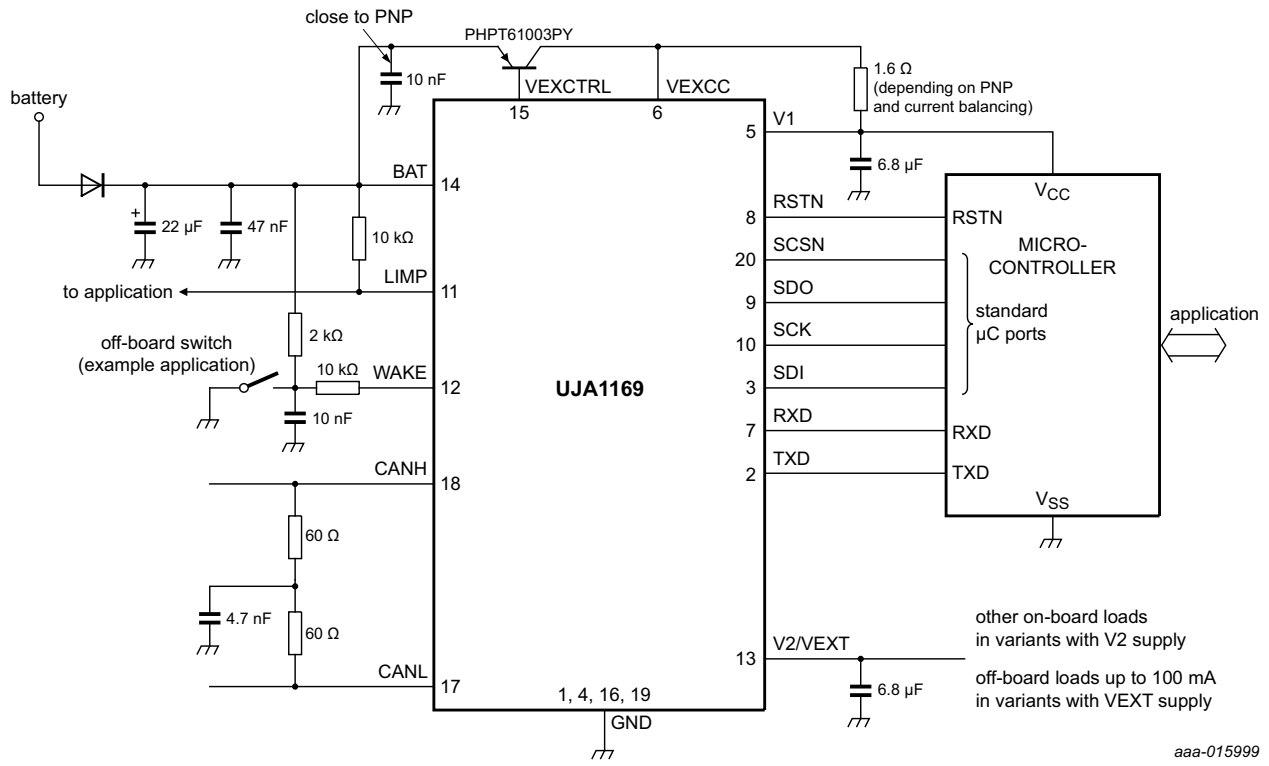

The application diagram contains example components and component values. A PHPT60603PY transistor could be used in place of the PHPT61003PY.

Fig 20. Typical application using the UJA1169

12.2 Application hints

Further information on the application of the UJA1169 can be found in the NXP application hints document *AH1306 Application Hints - Mini high speed CAN system basis chips UJA116x / UJA116xA.*

All information provided in this document is subject to legal disclaimers.

© NXP Semiconductors N.V. 2016. All rights reserved.

13. Test information

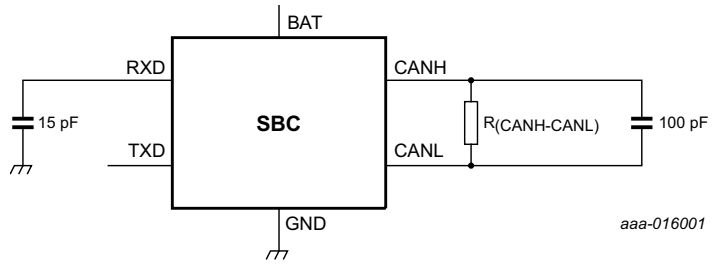

Fig 21. Timing test circuit for CAN transceiver

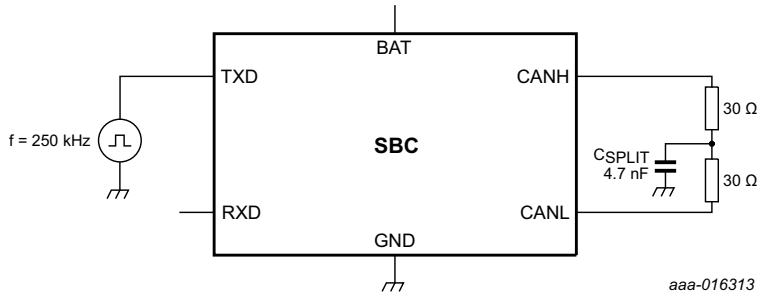

Fig 22. Test circuit for measuring transceiver driver symmetry

13.1 Quality information

This product has been qualified in accordance with the Automotive Electronics Council (AEC) standard *Q100 Rev-G - Failure mechanism based stress test qualification for integrated circuits*, and is suitable for use in automotive applications.

All information provided in this document is subject to legal disclaimers.

© NXP Semiconductors N.V. 2016. All rights reserved.

14. Package outline

HVSON20: plastic thermal enhanced extremely thin quad flat package; no leads; 20 terminals; body 3.5 x 5.5 x 0.85 mm **SOT1360-1**

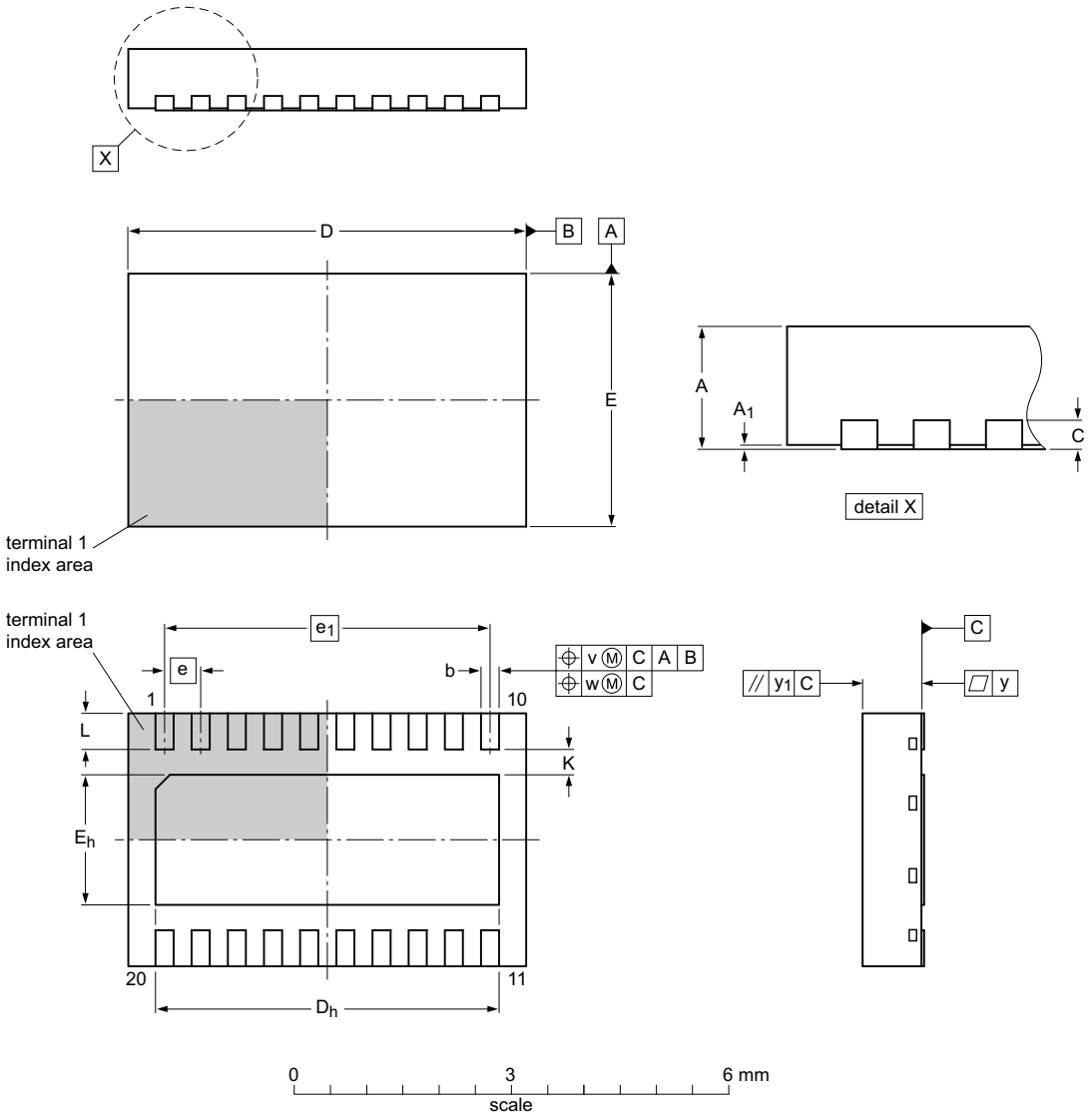

Dimensions

Unit		$A^{(1)}$	A_1	b	C	$D^{(1)}$	D_h	$E^{(1)}$	E_h	e	e_1	K	L	v	w	y	y_1
mm	max	1.00	0.05	0.30		5.6	4.85	3.6	1.85			0.40	0.55				
	nom	0.85	0.03	0.25	0.2	5.5	4.80	3.5	1.80	0.5	4.5	0.35	0.50	0.1	0.05	0.05	0.1
	min	0.80	0.00	0.20		5.4	4.75	3.4	1.75			0.30	0.45				

Note
1. Plastic or metal protrusions of 0.075 mm maximum per side are not included.

sot1360-1_po

Outline version	References				European projection	Issue date
	IEC	JEDEC	JEITA			
SOT1360-1		MO-240				~~15-05-13~~ 15-07-06

Fig 23. Package outline SOT1360-1 (HVSON20)

All information provided in this document is subject to legal disclaimers.

© NXP Semiconductors N.V. 2016. All rights reserved.

15. Handling information

All input and output pins are protected against ElectroStatic Discharge (ESD) under normal handling. When handling ensure that the appropriate precautions are taken as described in *JESD625-A* or equivalent standards.

16. Soldering of SMD packages

This text provides a very brief insight into a complex technology. A more in-depth account of soldering ICs can be found in Application Note *AN10365 “Surface mount reflow soldering description”*.

16.1 Introduction to soldering

Soldering is one of the most common methods through which packages are attached to Printed Circuit Boards (PCBs), to form electrical circuits. The soldered joint provides both the mechanical and the electrical connection. There is no single soldering method that is ideal for all IC packages. Wave soldering is often preferred when through-hole and Surface Mount Devices (SMDs) are mixed on one printed wiring board; however, it is not suitable for fine pitch SMDs. Reflow soldering is ideal for the small pitches and high densities that come with increased miniaturization.

16.2 Wave and reflow soldering

Wave soldering is a joining technology in which the joints are made by solder coming from a standing wave of liquid solder. The wave soldering process is suitable for the following:

- Through-hole components
- Leaded or leadless SMDs, which are glued to the surface of the printed circuit board

Not all SMDs can be wave soldered. Packages with solder balls, and some leadless packages which have solder lands underneath the body, cannot be wave soldered. Also, leaded SMDs with leads having a pitch smaller than ~0.6 mm cannot be wave soldered, due to an increased probability of bridging.

The reflow soldering process involves applying solder paste to a board, followed by component placement and exposure to a temperature profile. Leaded packages, packages with solder balls, and leadless packages are all reflow solderable.

Key characteristics in both wave and reflow soldering are:

- Board specifications, including the board finish, solder masks and vias
- Package footprints, including solder thieves and orientation
- The moisture sensitivity level of the packages
- Package placement
- Inspection and repair
- Lead-free soldering versus SnPb soldering

16.3 Wave soldering

Key characteristics in wave soldering are:

All information provided in this document is subject to legal disclaimers.

© NXP Semiconductors N.V. 2016. All rights reserved.

- Process issues, such as application of adhesive and flux, clinching of leads, board transport, the solder wave parameters, and the time during which components are exposed to the wave
- Solder bath specifications, including temperature and impurities

16.4 Reflow soldering

Key characteristics in reflow soldering are:

- Lead-free versus SnPb soldering; note that a lead-free reflow process usually leads to higher minimum peak temperatures (see Figure 24) than a SnPb process, thus reducing the process window
- Solder paste printing issues including smearing, release, and adjusting the process window for a mix of large and small components on one board
- Reflow temperature profile; this profile includes preheat, reflow (in which the board is heated to the peak temperature) and cooling down. It is imperative that the peak temperature is high enough for the solder to make reliable solder joints (a solder paste characteristic). In addition, the peak temperature must be low enough that the packages and/or boards are not damaged. The peak temperature of the package depends on package thickness and volume and is classified in accordance with Table 54 and 55

Table 54. SnPb eutectic process (from J-STD-020D)

Package thickness (mm)	Package reflow temperature (°C)	
	Volume (mm^3)	
	< 350	≥ 350
< 2.5	235	220
≥ 2.5	220	220

Table 55. Lead-free process (from J-STD-020D)

Package thickness (mm)	Package reflow temperature (°C)		
	Volume (mm^3)		
	< 350	350 to 2000	> 2000
< 1.6	260	260	260
1.6 to 2.5	260	250	245
> 2.5	250	245	245

Moisture sensitivity precautions, as indicated on the packing, must be respected at all times.

Studies have shown that small packages reach higher temperatures during reflow soldering, see Figure 24.

All information provided in this document is subject to legal disclaimers.

© NXP Semiconductors N.V. 2016. All rights reserved.

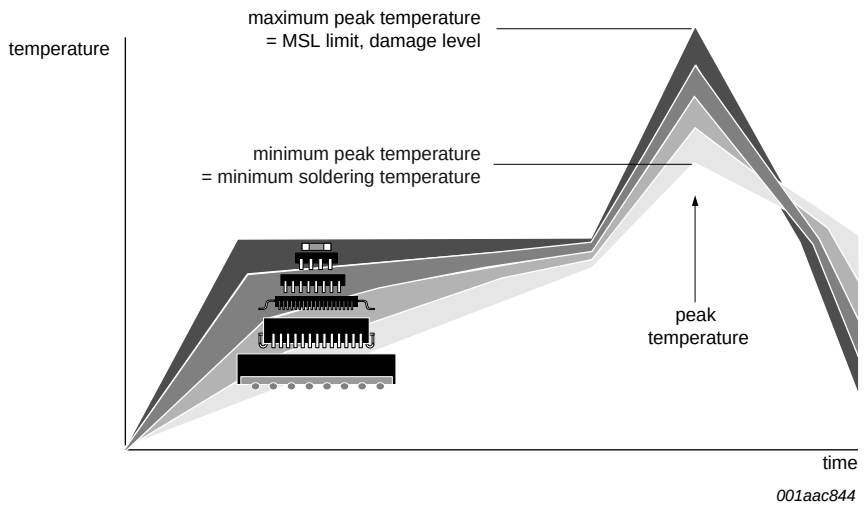

MSL: Moisture Sensitivity Level

Fig 24. Temperature profiles for large and small components

For further information on temperature profiles, refer to Application Note *AN10365 "Surface mount reflow soldering description"*.

17. Soldering of HVSON packages

Section 16 contains a brief introduction to the techniques most commonly used to solder Surface Mounted Devices (SMD). A more detailed discussion on soldering HVSON leadless package ICs can be found in the following application notes:

- *AN10365 'Surface mount reflow soldering description"*
- *AN10366 "HVQFN application information"*

All information provided in this document is subject to legal disclaimers.

© NXP Semiconductors N.V. 2016. All rights reserved.

18. Revision history

Table 56. Revision history

Document ID	Release date	Data sheet status	Change notice	Supersedes
UJA1169 v.1	20160204	Product data sheet	-	-

All information provided in this document is subject to legal disclaimers.

© NXP Semiconductors N.V. 2016. All rights reserved.

19. Legal information

19.1 Data sheet status

Document status[1][2]	Product status[3]	Definition
Objective [short] data sheet	Development	This document contains data from the objective specification for product development.
Preliminary [short] data sheet	Qualification	This document contains data from the preliminary specification.
Product [short] data sheet	Production	This document contains the product specification.

[1] Please consult the most recently issued document before initiating or completing a design.

[2] The term 'short data sheet' is explained in section "Definitions".

[3] The product status of device(s) described in this document may have changed since this document was published and may differ in case of multiple devices. The latest product status information is available on the Internet at URL http://www.nxp.com.

19.2 Definitions

Draft — The document is a draft version only. The content is still under internal review and subject to formal approval, which may result in modifications or additions. NXP Semiconductors does not give any representations or warranties as to the accuracy or completeness of information included herein and shall have no liability for the consequences of use of such information.

Short data sheet — A short data sheet is an extract from a full data sheet with the same product type number(s) and title. A short data sheet is intended for quick reference only and should not be relied upon to contain detailed and full information. For detailed and full information see the relevant full data sheet, which is available on request via the local NXP Semiconductors sales office. In case of any inconsistency or conflict with the short data sheet, the full data sheet shall prevail.

Product specification — The information and data provided in a Product data sheet shall define the specification of the product as agreed between NXP Semiconductors and its customer, unless NXP Semiconductors and customer have explicitly agreed otherwise in writing. In no event however, shall an agreement be valid in which the NXP Semiconductors product is deemed to offer functions and qualities beyond those described in the Product data sheet.

19.3 Disclaimers

Limited warranty and liability — Information in this document is believed to be accurate and reliable. However, NXP Semiconductors does not give any representations or warranties, expressed or implied, as to the accuracy or completeness of such information and shall have no liability for the consequences of use of such information. NXP Semiconductors takes no responsibility for the content in this document if provided by an information source outside of NXP Semiconductors.

In no event shall NXP Semiconductors be liable for any indirect, incidental, punitive, special or consequential damages (including - without limitation - lost profits, lost savings, business interruption, costs related to the removal or replacement of any products or rework charges) whether or not such damages are based on tort (including negligence), warranty, breach of contract or any other legal theory.

Notwithstanding any damages that customer might incur for any reason whatsoever, NXP Semiconductors' aggregate and cumulative liability towards customer for the products described herein shall be limited in accordance with the *Terms and conditions of commercial sale* of NXP Semiconductors.

Right to make changes — NXP Semiconductors reserves the right to make changes to information published in this document, including without limitation specifications and product descriptions, at any time and without notice. This document supersedes and replaces all information supplied prior to the publication hereof.

Suitability for use in automotive applications — This NXP Semiconductors product has been qualified for use in automotive applications. Unless otherwise agreed in writing, the product is not designed, authorized or warranted to be suitable for use in life support, life-critical or safety-critical systems or equipment, nor in applications where failure or malfunction of an NXP Semiconductors product can reasonably be expected to result in personal injury, death or severe property or environmental damage. NXP Semiconductors and its suppliers accept no liability for inclusion and/or use of NXP Semiconductors products in such equipment or applications and therefore such inclusion and/or use is at the customer's own risk.

Applications — Applications that are described herein for any of these products are for illustrative purposes only. NXP Semiconductors makes no representation or warranty that such applications will be suitable for the specified use without further testing or modification.

Customers are responsible for the design and operation of their applications and products using NXP Semiconductors products, and NXP Semiconductors accepts no liability for any assistance with applications or customer product design. It is customer's sole responsibility to determine whether the NXP Semiconductors product is suitable and fit for the customer's applications and products planned, as well as for the planned application and use of customer's third party customer(s). Customers should provide appropriate design and operating safeguards to minimize the risks associated with their applications and products.

NXP Semiconductors does not accept any liability related to any default, damage, costs or problem which is based on any weakness or default in the customer's applications or products, or the application or use by customer's third party customer(s). Customer is responsible for doing all necessary testing for the customer's applications and products using NXP Semiconductors products in order to avoid a default of the applications and the products or of the application or use by customer's third party customer(s). NXP does not accept any liability in this respect.

Limiting values — Stress above one or more limiting values (as defined in the Absolute Maximum Ratings System of IEC 60134) will cause permanent damage to the device. Limiting values are stress ratings only and (proper) operation of the device at these or any other conditions above those given in the Recommended operating conditions section (if present) or the Characteristics sections of this document is not warranted. Constant or repeated exposure to limiting values will permanently and irreversibly affect the quality and reliability of the device.

Terms and conditions of commercial sale — NXP Semiconductors products are sold subject to the general terms and conditions of commercial sale, as published at http://www.nxp.com/profile/terms, unless otherwise agreed in a valid written individual agreement. In case an individual agreement is concluded only the terms and conditions of the respective agreement shall apply. NXP Semiconductors hereby expressly objects to applying the customer's general terms and conditions with regard to the purchase of NXP Semiconductors products by customer.

All information provided in this document is subject to legal disclaimers.

© NXP Semiconductors N.V. 2016. All rights reserved.

No offer to sell or license — Nothing in this document may be interpreted or construed as an offer to sell products that is open for acceptance or the grant, conveyance or implication of any license under any copyrights, patents or other industrial or intellectual property rights.

Export control — This document as well as the item(s) described herein may be subject to export control regulations. Export might require a prior authorization from competent authorities.

Translations — A non-English (translated) version of a document is for reference only. The English version shall prevail in case of any discrepancy between the translated and English versions.

19.4 Trademarks

Notice: All referenced brands, product names, service names and trademarks are the property of their respective owners.

20. Contact information

For more information, please visit: **http://www.nxp.com**

For sales office addresses, please send an email to: **salesaddresses@nxp.com**

All information provided in this document is subject to legal disclaimers.

© NXP Semiconductors N.V. 2016. All rights reserved.

21. Contents

1 General description 1
2 Features and benefits 2
2.1 General 2
2.2 Designed for automotive applications 2
2.3 Low-drop voltage regulator for 5 V/3.3 V microcontroller supply (V1) 2
2.4 On-board CAN supply (V2; UJA1169TK, UJA1169TK/F, UJA1169TK/3 and UJA1169TK/F/3 only) 2
2.5 Off-board sensor supply (VEXT; UJA1169TK/X and UJA1169TK/X/F only) 3
2.6 Power Management 3
2.7 System control and diagnostic features 3
3 Product family overview 4
4 Ordering information 4
5 Block diagram 5
6 Pinning information 6
6.1 Pinning 6
6.2 Pin description 6
7 Functional description 7
7.1 System controller 7
7.1.1 Operating modes 7
7.1.1.1 Normal mode 7
7.1.1.2 Standby mode 7
7.1.1.3 Sleep mode 8
7.1.1.4 Reset mode 9
7.1.1.5 Off mode 9
7.1.1.6 Overtemp mode 9
7.1.1.7 Forced Normal mode 10
7.1.1.8 Hardware characterization for the UJA1169 operating modes 10
7.1.2 System control registers 11
7.1.2.1 Mode control register (0x01) 11
7.1.2.2 Main status register (0x03) 11
7.2 Watchdog 12
7.2.1 Watchdog overview 12
7.2.1.1 Watchdog control register (0x00) 13
7.2.1.2 SBC configuration control register (0x74) 13
7.2.1.3 Watchdog status register (0x05) 14
7.2.2 Software Development mode 15
7.2.3 Watchdog behavior in Window mode 15
7.2.4 Watchdog behavior in Timeout mode 15
7.2.5 Watchdog behavior in Autonomous mode . . . 15
7.2.6 Exceptional behavior of the watchdog after writing to the Watchdog register 16
7.3 System reset 16
7.3.1 Characteristics of pin RSTN 16
7.3.2 Selecting the output reset pulse width 17
7.3.2.1 Start-up control register (0x73) 17
7.4 Global temperature protection 17
7.5 Power supplies 18
7.5.1 Battery supply voltage (V_{BAT}) 18
7.5.2 Voltage regulator V1 18
7.5.3 Voltage regulator V2 19
7.5.4 Voltage regulator VEXT 20
7.5.5 Regulator control register (0x10) 20
7.5.6 Supply voltage status register (0x1B) 21
7.6 LIMP output 21
7.6.1 Reset counter 21
7.6.2 LIMP state diagram 22
7.6.2.1 Fail-safe control register (0x02) 23
7.7 High-speed CAN transceiver 23
7.7.1 CAN operating modes 23
7.7.1.1 CAN Active mode 24
7.7.1.2 CAN Listen-only mode 24
7.7.1.3 CAN Offline and Offline Bias modes 24
7.7.1.4 CAN Off mode 25
7.7.2 CAN standard wake-up (partial networking not enabled) 25
7.7.2.1 CAN control register (0x20) 26
7.7.2.2 Transceiver status register (0x22) 27
7.8 CAN partial networking (UJA1169 /F variants only) 28
7.8.1 Wake-up frame (WUF) 28
7.8.2 CAN FD frames 30
7.8.3 CAN partial networking configuration registers 31
7.8.3.1 Data rate register (0x26) 31
7.8.3.2 ID registers (0x27 to 0x2A) 31
7.8.3.3 ID mask registers (0x2B to 0x2E) 31
7.8.3.4 Frame control register (0x2F) 32
7.8.3.5 Data mask registers (0x68 to 0x6F) 32
7.9 CAN fail-safe features 33
7.9.1 TXD dominant time-out 33
7.9.2 Pull-up on TXD pin 33
7.9.3 V_{CAN} undervoltage event 33
7.9.4 Loss of power at pin BAT 34
7.10 Wake-up and interrupt event handling 34
7.10.1 WAKE pin 34
7.10.1.1 WAKE pin status register (0x4B) 34
7.10.2 Wake-up diagnosis 34
7.10.3 Interrupt/wake-up delay 35
7.10.4 Sleep mode protection 36
7.10.5 Event status and event capture registers 37
7.10.5.1 Event status registers (0x60 to 0x64) 37

continued >>

All information provided in this document is subject to legal disclaimers.

© NXP Semiconductors N.V. 2016. All rights reserved.

7.10.5.2 Event capture enable registers (0x04, 0x1C, 0x23, 0x4C) . . . 39
7.11 Non-volatile SBC configuration . . . 40
7.11.1 Programming MTPNV cells . . . 40
7.11.1.1 MTPNV status register (0x70) . . . 41
7.11.1.2 MTPNV CRC control register (0x75) . . . 42
7.11.2 Restoring factory preset values . . . 43
7.12 Device identification . . . 43
7.12.1 Device identification register (0x7E) . . . 43
7.13 Register locking . . . 43
7.13.1 Lock control register (0x0A) . . . 43
7.14 General-purpose memory . . . 44
7.15 SPI . . . 44
7.15.1 Introduction . . . 44
7.15.2 Register map . . . 47
7.15.3 Register configuration in UJA1169 operating modes . . . 49
8 Limiting values . . . 52
9 Thermal characteristics . . . 53
10 Static characteristics . . . 53
11 Dynamic characteristics . . . 59
12 Application information . . . 64
12.1 Application diagram . . . 64
12.2 Application hints . . . 64
13 Test information . . . 65
13.1 Quality information . . . 65
14 Package outline . . . 66
15 Handling information . . . 67
16 Soldering of SMD packages . . . 67
16.1 Introduction to soldering . . . 67
16.2 Wave and reflow soldering . . . 67
16.3 Wave soldering . . . 67
16.4 Reflow soldering . . . 68
17 Soldering of HVSON packages . . . 69
18 Revision history . . . 70
19 Legal information . . . 71
19.1 Data sheet status . . . 71
19.2 Definitions . . . 71
19.3 Disclaimers . . . 71
19.4 Trademarks . . . 72
20 Contact information . . . 72
21 Contents . . . 73

Please be aware that important notices concerning this document and the product(s) described herein, have been included in section ‘Legal information’.

© NXP Semiconductors N.V. 2016. All rights reserved.

For more information, please visit: http://www.nxp.com
For sales office addresses, please send an email to: salesaddresses@nxp.com

Date of release: 4 February 2016
Document identifier: UJA1169

Компания «ЭлектроПласт» предлагает заключение долгосрочных отношений при поставках импортных электронных компонентов на взаимовыгодных условиях!

Наши преимущества:

- Оперативные поставки широкого спектра электронных компонентов отечественного и импортного производства напрямую от производителей и с крупнейших мировых складов;
- Поставка более 17-ти миллионов наименований электронных компонентов;
- Поставка сложных, дефицитных, либо снятых с производства позиций;
- Оперативные сроки поставки под заказ (от 5 рабочих дней);
- Экспресс доставка в любую точку России;
- Техническая поддержка проекта, помощь в подборе аналогов, поставка прототипов;
- Система менеджмента качества сертифицирована по Международному стандарту ISO 9001;
- Лицензия ФСБ на осуществление работ с использованием сведений, составляющих государственную тайну;
- Поставка специализированных компонентов (Xilinx, Altera, Analog Devices, Intersil, Interpoint, Microsemi, Aeroflex, Peregrine, Syfer, Eurofarad, Texas Instrument, Miteq, Cobham, E2V, MA-COM, Hittite, Mini-Circuits,General Dynamics и др.);

Помимо этого, одним из направлений компании «ЭлектроПласт» является направление «Источники питания». Мы предлагаем Вам помощь Конструкторского отдела:

- Подбор оптимального решения, техническое обоснование при выборе компонента;
- Подбор аналогов;
- Консультации по применению компонента;
- Поставка образцов и прототипов;
- Техническая поддержка проекта;
- Защита от снятия компонента с производства.

Как с нами связаться

Телефон: 8 (812) 309 58 32 (многоканальный)
Факс: 8 (812) 320-02-42
Электронная почта: org@eplast1.ru
Адрес: 198099, г. Санкт-Петербург, ул. Калинина, дом 2, корпус 4, литера А.