# DSC1033

**3.3V** Low-Power CMOS Oscillator

## General Description

The DSC1033 is a 3.3V fixed frequency MEMS based PureSilicon™ Oscillator. It can be factory programmed to any frequency from 1 to 150MHz.

The DSC1033 incorporates an all silicon resonator that is extremely robust and nearly immune to stress related fractures, common to crystal based oscillators. Without sacrificing the performance and stability required of today's systems, a crystal-less design allows for a higher level of reliability, making the DSC1033 ideal for rugged, industrial, and portable applications where stress, shock, and vibration can damage quartz crystal based systems.

Available in industry standard packages, the DSC1033 can be "dropped-in" to the same PCB footprint as standard crystal oscillators.

## Block Diagram

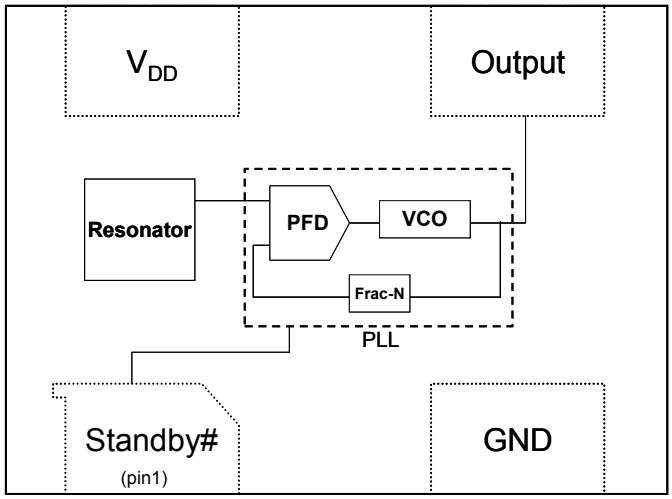


## Features

- Frequency Range: 1 to 150MHz
- Exceptional Stability over Temperature
  - ±25 PPM, ±50 PPM
- Operating voltage
  - 3.0 to 3.6V
- Operating Temperature Range
  - Industrial -40ºC to 85ºC
  - Ext. Commercial -20ºC to 70ºC
  - Commercial 0ºC to 70ºC
- Low Operating and Standby Current
  - 3mA Operating (40MHz)
  - 1uA Standby
- Ultra Miniature Footprint
  - 2.5 x 2.0 x 0.85 mm
  - 3.2 x 2.5 x 0.85 mm
  - 5.0 x 3.2 x 0.85 mm
  - 7.0 x 5.0 x 0.85 mm
- Excellent Shock and Vibration Resistance
- Lead Free, RoHS & Reach SVHC Compliant

## Benefits

- Pin for pin "drop in" replacement for industry standard oscillators
- Semiconductor level reliability, significantly higher than quartz
- Short mass production lead-times
- Longer Battery Life / Reduced Power
- Compact Plastic package
- Cost Effective

## Applications

- Mobile Applications
- Consumer Electronics
- Portable Electronics
- CCD Clock for VTR Cameras
- Low Profile Applications
- Industrial

All Rights Reserved. No part of this document may be copied or reproduced in any form without the prior written permission of Micrel, Inc. Micrel Inc. may update or make changes to the contents, products, programs or services described at any time without notice. This document neither states nor implies any kind of warranty, including, but not limited to implied warranties of merchantability or fitness for a particular use.

## Absolute Maximum Ratings[1]

| Item | Min. | Max | Unit | Condition |
|---|---|---|---|---|
| **Supply Voltage** | -0.3 | +4.0 | V | |
| **Input Voltage** | -0.3 | VDD+0.3 | V | |
| **Junction Temp** | - | +150 | °C | |
| **Storage Temp** | -55 | +150 | °C | |
| **Soldering Temp** | - | +260 | °C | 40 sec max. |
| **ESD** | - | | V | |
| **HBM** | | 2000 | | |
| **MM** | | 200 | | |
| **CDM** | | 500 | | |

## Ordering Code

DSC1033 CE1 - 032.0000 T

- DSC1033: Family
- CE1: Package, Temp & Stability
- 032.0000: Output Freq 1.0 to 150MHz
- T: Tape/ Reel

* See Ordering Information for details

## Recommended Operating Conditions

| Parameter | Symbol | Range |
|---|---|---|
| **Supply Voltage** | $V_{DD}$ | 3.0 – 3.6V |
| **Output Load** | $Z_L$ | R>10KΩ, C≤15pF |
| **Operating Temperature**<br>**Option 1**<br>**Option 2**<br>**Option 3** | T | <br>-40 – +85 °C<br>-20 – +70 °C<br>0 – +70 °C |

## Specifications

| Parameter | Symbol | Condition | | Min. | Typ. | Max. | Unit |
|---|---|---|---|---|---|---|---|
| **Frequency** | $f_0$ | Single Frequency | | 1 | | 150 | MHz |
| **Frequency Tolerance**<br>**Option 1**<br>**Option 2**<br>**Option 3** | Δf | <br>-40°C to +85°C<br>-20°C to +70°C<br>0°C to +70°C | | | | <br>±25,±50<br>±25,±50<br>±25,±50 | ppm |
| **Supply Current, no load** | $I_{DD}$ | $C_L$=0p<br>$R_L$=∞<br>T=25°<br>C | <br>1 to 40MHz<br>40 to 80MHz<br>80 to 125MHz<br>125 to 150MHz | | <br>3<br>4<br>5<br>6 | <br><br><br><br>10 | mA |
| **Supply Current, standby** | $I_{DD}$ | T=25°C | | | | 1.0 | uA |
| **Output Logic Levels**<br>**Output logic high**<br>**Output logic low** | <br>$V_{OH}$<br>$V_{OL}$ | $C_L$=15pF | | <br>0.8*$V_{DD}$<br>- | | <br>-<br>0.2*$V_{DD}$ | Volts |
| **Output Transition time**<br>**Rise Time**<br>**Fall Time** | <br>$t_R$<br>$t_F$ | $C_L$=15pF; T=25°C<br>20%/80%*$V_{DD}$ | | | <br>1.3<br>1.3 | <br>2<br>2 | ns |
| **Output Startup Time[2]** | $t_{SU}$ | T=25°C | | | 1.5 | 3 | ms |
| **Output Disable Time** | $t_{DA}$ | | | | 20 | 100 | ns |
| **Output Duty Cycle** | SYM | | | 45 | | 55 | % |
| **Input Logic Levels**<br>**Input logic high**<br>**Input logic low** | <br>$V_{IH}$<br>$V_{IL}$ | | | <br>0.75*$V_{DD}$<br>- | | <br>-<br>0.25* $V_{DD}$ | Volts |
| **Jitter, Cycle to Cycle** | $J_{CC}$ | F = 100MHz[3] | | | 95 | | ps |

Notes:
1. Absolute maximum ratings are those values beyond which the safety of the device cannot be guaranteed. The device should not be operated beyond these limits.
2. $t_{SU}$ is time to stable output frequency after $V_{DD}$ is applied. $t_{SU}$ and $t_{EN}$ (after EN is asserted) are identical values.
3. See typical cycle to cycle jitter graph for frequency dependence.

All Rights Reserved. No part of this document may be copied or reproduced in any form without the prior written permission of Micrel, Inc. Micrel Inc. may update or make changes to the contents, products, programs or services described at any time without notice. This document neither states nor implies any kind of warranty, including, but not limited to implied warranties of merchantability or fitness for a particular use.

## Nominal Performance Characteristics

3.3V Characteristics

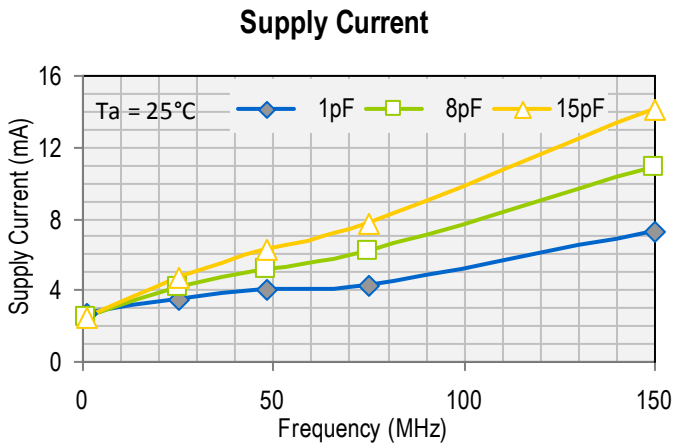


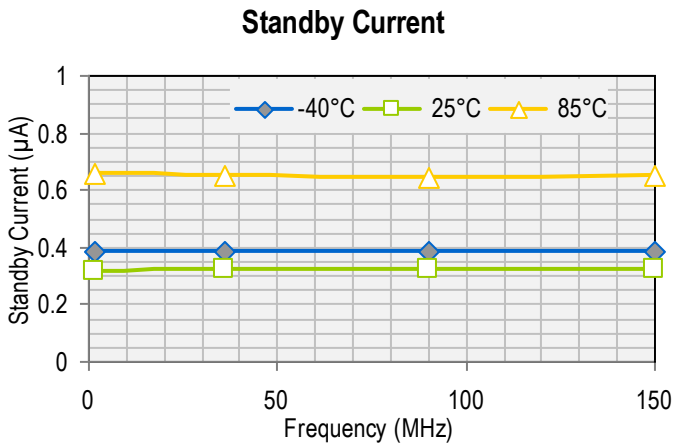


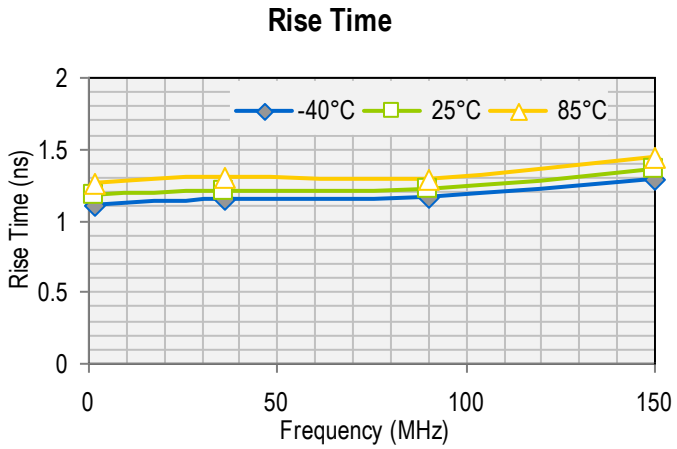


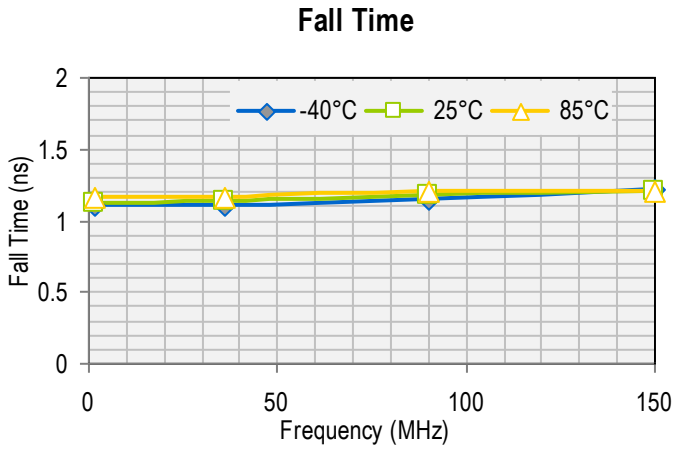


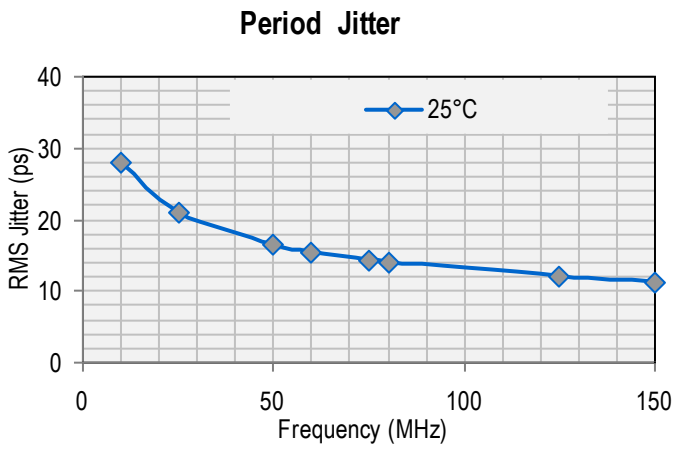


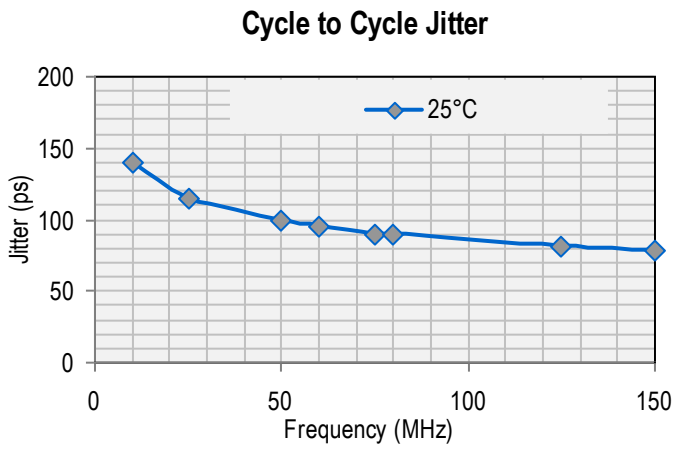


All Rights Reserved. No part of this document may be copied or reproduced in any form without the prior written permission of Micrel, Inc. Micrel Inc. may update or make changes to the contents, products, programs or services described at any time without notice. This document neither states nor implies any kind of warranty, including, but not limited to implied warranties of merchantability or fitness for a particular use.

## Output Waveform

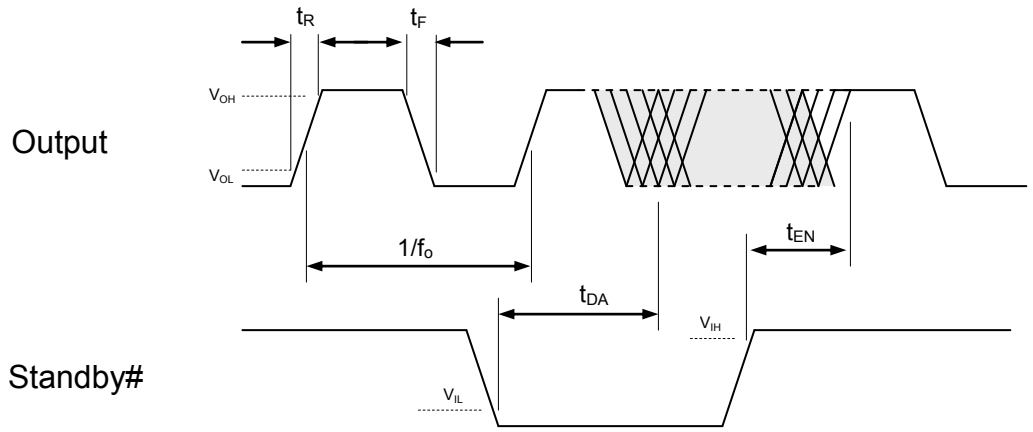


## Standby Function

| Standby# (pin 1) | Output (pin 3) |
|---|---|
| Hi Level | Output ON |
| Open (no connect) | Output ON |
| Low Level | High Impedance |

## Test Circuit

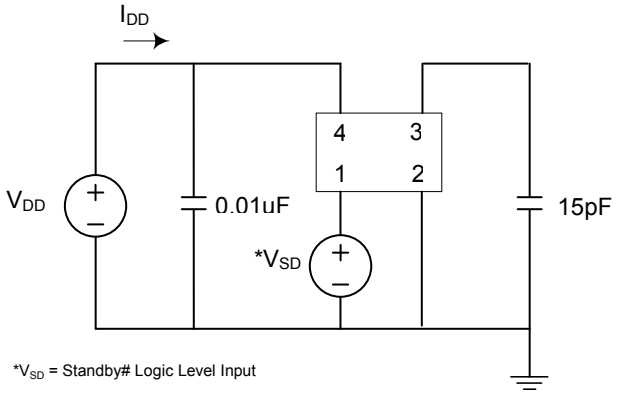


All Rights Reserved. No part of this document may be copied or reproduced in any form without the prior written permission of Micrel, Inc. Micrel Inc. may update or make changes to the contents, products, programs or services described at any time without notice. This document neither states nor implies any kind of warranty, including, but not limited to implied warranties of merchantability or fitness for a particular use.

## Board Layout (recommended)

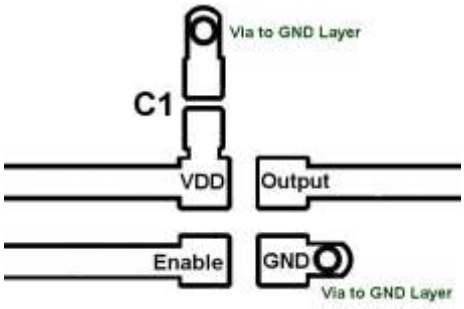


## Solder Reflow Profile

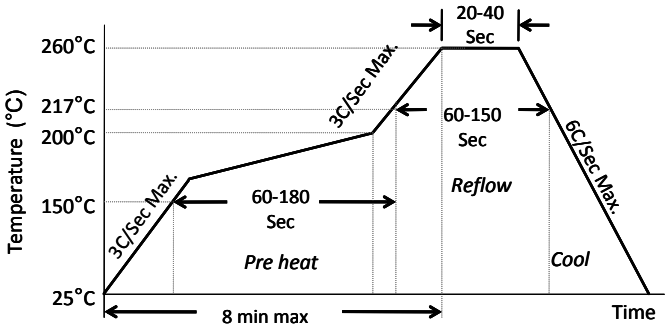


| MSL 1 @ 260°C refer to JSTD-020C | |
|---|---|
| Ramp-Up Rate (200°C to Peak Temp) | 3°C/Sec Max. |
| Preheat Time 150°C to 200°C | 60-180 Sec |
| Time maintained above 217°C | 60-150 Sec |
| Peak Temperature | 255-260°C |
| Time within 5°C of actual Peak | 20-40 Sec |
| Ramp-Down Rate | 6°C/Sec Max. |
| Time 25°C to Peak Temperature | 8 min Max. |

## Package Dimensions

### 7.0 x 5.0 mm Plastic Package

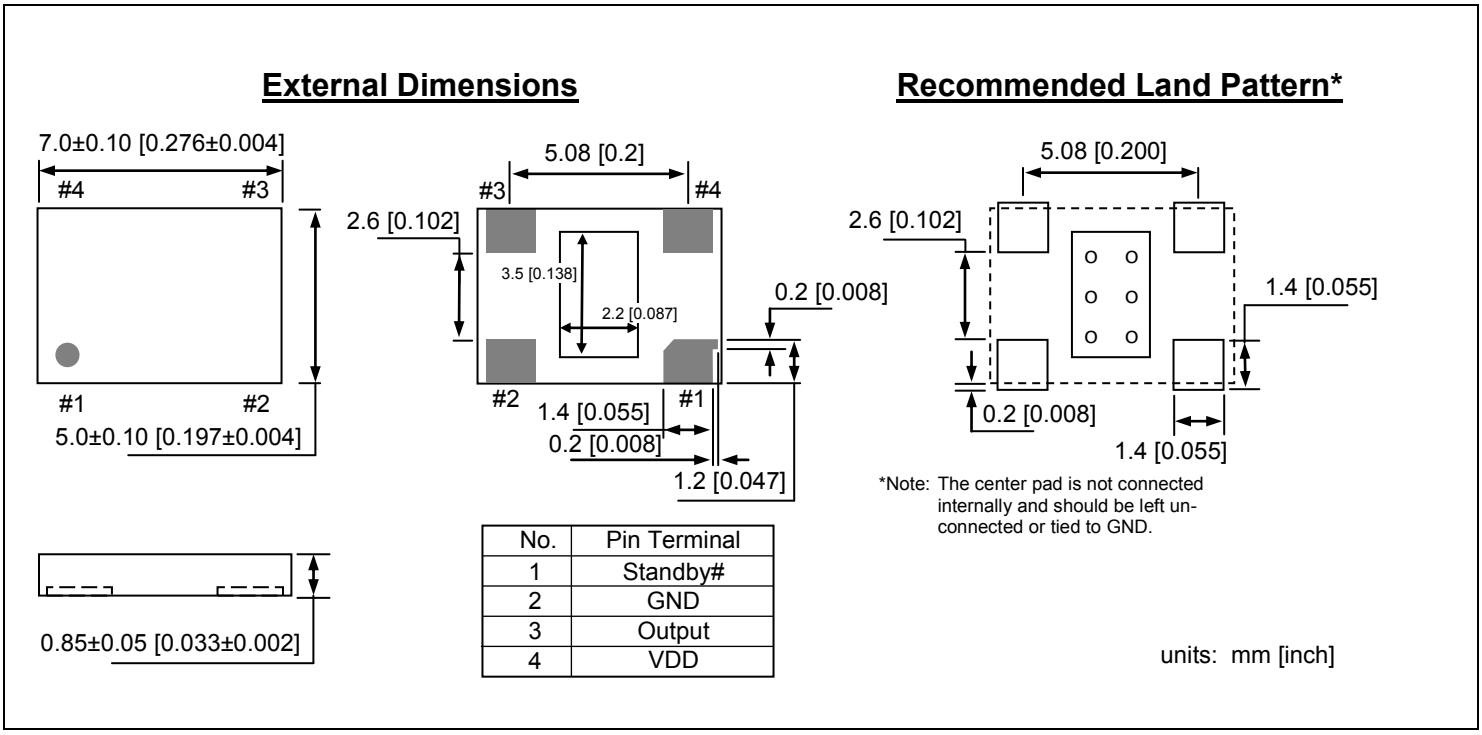


| No. | Pin Terminal |
|---|---|
| 1 | Standby# |
| 2 | GND |
| 3 | Output |
| 4 | VDD |

All Rights Reserved. No part of this document may be copied or reproduced in any form without the prior written permission of Micrel, Inc. Micrel Inc. may update or make changes to the contents, products, programs or services described at any time without notice. This document neither states nor implies any kind of warranty, including, but not limited to implied warranties of merchantability or fitness for a particular use.

## 5.0 x 3.2 mm Plastic Package

### External Dimensions

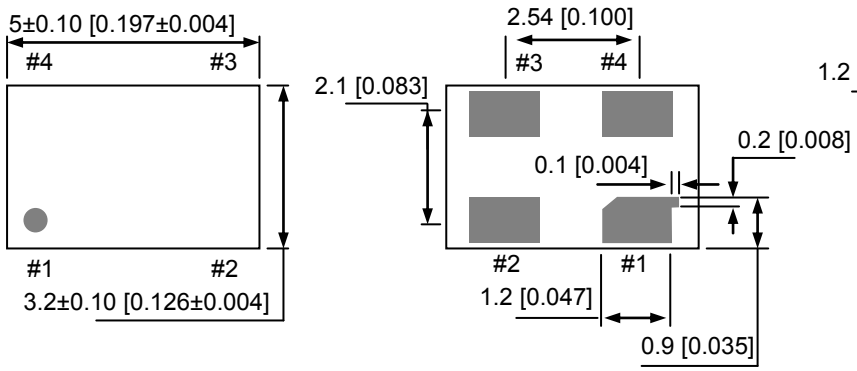


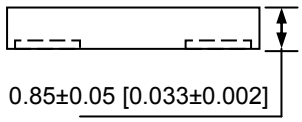


| No. | Pin Terminal |
|---|---|
| 1 | Standby# |
| 2 | GND |
| 3 | Output |
| 4 | VDD |

### Recommended Land Pattern

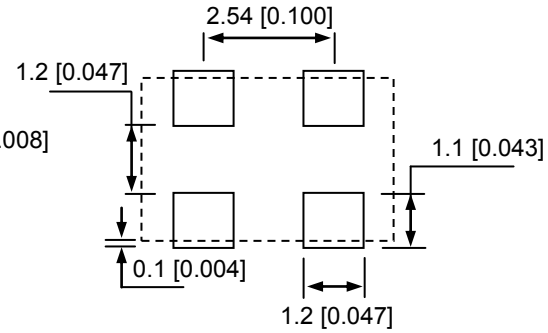


units: mm [inch]

## 3.2 x 2.5 mm Plastic Package

### External Dimensions

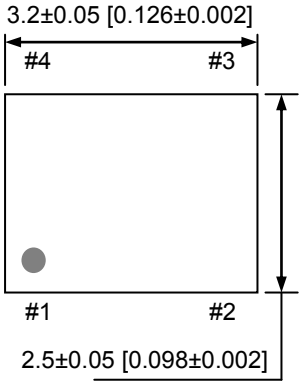


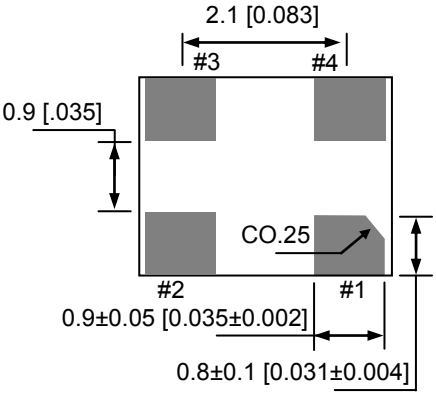


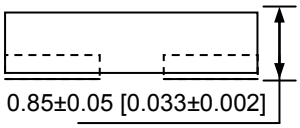


| No | Pin Terminal |
|---|---|
| 1 | Standby# |
| 2 | GND |
| 3 | Output |
| 4 | VDD |

### Recommended Land Pattern

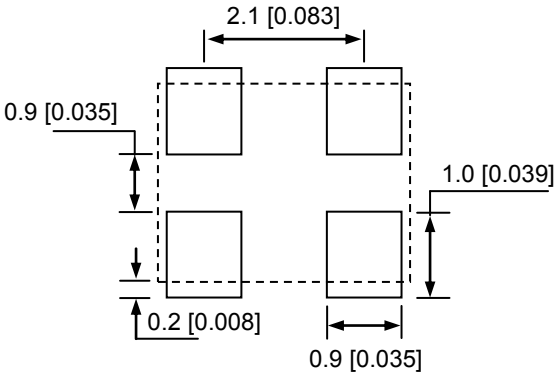


units: mm [inch]

All Rights Reserved. No part of this document may be copied or reproduced in any form without the prior written permission of Micrel, Inc. Micrel Inc. may update or make changes to the contents, products, programs or services described at any time without notice. This document neither states nor implies any kind of warranty, including, but not limited to implied warranties of merchantability or fitness for a particular use.

## 2.5 x 2.0 mm Plastic Package

### External Dimensions

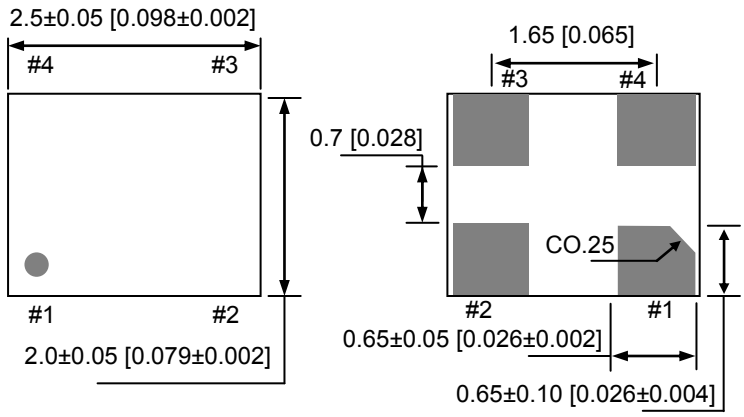


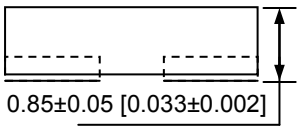


| No | Pin Terminal |
|---|---|
| 1 | Standby# |
| 2 | GND |
| 3 | Output |
| 4 | VDD |

### Recommended Land Pattern

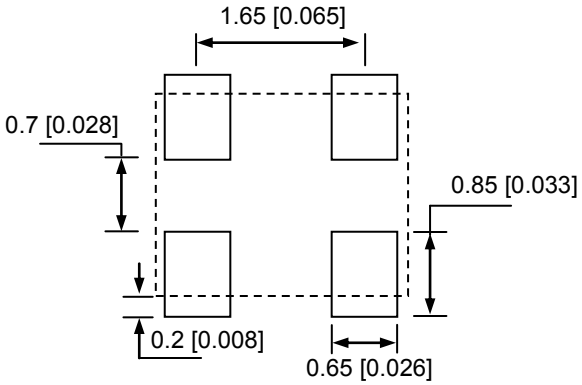


units: mm [inch]

## Ordering Information

### DSC1033 PTS – xxx.xxxx T

| PART NUMBERING GUIDE | | | | |
|---|---|---|---|---|
| **Package** (Plastic QFN) | **Temperature** | **Stability** | **Frequency** | **Packing Option** |
| **P=A:** 7.0x5.0mm<br>**P=B:** 5.0x3.2mm<br>**P=C:** 3.2x2.5mm<br>**P=D:** 2.5x2.0mm | **T=C:** 0° ~ +70° C<br>**T=E:** -20° ~ +70° C<br>**T=I:** -40° ~ +85° C | **S=1:** ±50ppm<br>**S=2:** ±25ppm | **XXX.XXXX**<br>(4 decimal places) | **Blank:** Tubes<br>**T:** Tape & Reel |

Example: DSC1033CE1–123.0000T

The example part number above is a 123.0000MHz oscillator in Plastic 3.2x2.5mm package, with ±50ppm stability over an operating temperature of -20 to +70°C, shipped in Tape and Reel. The reel size (7" or 13" diameter) will be determined by the factory based on quantity.

**Disclaimer:**

Micrel makes no representations or warranties with respect to the accuracy or completeness of the information furnished in this data sheet. This information is not intended as a warranty and Micrel does not assume responsibility for its use. Micrel reserves the right to change circuitry, specifications and descriptions at any time without notice. No license, whether express, implied, arising by estoppel or otherwise, to any intellectual property rights is granted by this document. Except as provided in Micrel's terms and conditions of sale for such products, Micrel assumes no liability whatsoever, and Micrel disclaims any express or implied warranty relating to the sale and/or use of Micrel products including liability or warranties relating to fitness for a particular purpose, merchantability, or infringement of any patent, copyright or other intellectual property right.

**MICREL, Inc.** • **2180 Fortune Drive, San Jose, California 95131** • **USA**
**Phone: +1 (408) 944-0800** • **Fax: +1 (408) 474-1000** • **Email: hbwhelp@micrel.com** • **www.micrel.com**

All Rights Reserved. No part of this document may be copied or reproduced in any form without the prior written permission of Micrel, Inc. Micrel Inc. may update or make changes to the contents, products, programs or services described at any time without notice. This document neither states nor implies any kind of warranty, including, but not limited to implied warranties of merchantability or fitness for a particular use.

Компания «ЭлектроПласт» предлагает заключение долгосрочных отношений при поставках импортных электронных компонентов на взаимовыгодных условиях!

Наши преимущества:

- Оперативные поставки широкого спектра электронных компонентов отечественного и импортного производства напрямую от производителей и с крупнейших мировых складов;
- Поставка более 17-ти миллионов наименований электронных компонентов;
- Поставка сложных, дефицитных, либо снятых с производства позиций;
- Оперативные сроки поставки под заказ (от 5 рабочих дней);
- Экспресс доставка в любую точку России;
- Техническая поддержка проекта, помощь в подборе аналогов, поставка прототипов;
- Система менеджмента качества сертифицирована по Международному стандарту ISO 9001;
- Лицензия ФСБ на осуществление работ с использованием сведений, составляющих государственную тайну;
- Поставка специализированных компонентов (Xilinx, Altera, Analog Devices, Intersil, Interpoint, Microsemi, Aeroflex, Peregrine, Syfer, Eurofarad, Texas Instrument, Miteq, Cobham, E2V, MA-COM, Hittite, Mini-Circuits,General Dynamics и др.);

Помимо этого, одним из направлений компании «ЭлектроПласт» является направление «Источники питания». Мы предлагаем Вам помощь Конструкторского отдела:

- Подбор оптимального решения, техническое обоснование при выборе компонента;
- Подбор аналогов;
- Консультации по применению компонента;
- Поставка образцов и прототипов;
- Техническая поддержка проекта;
- Защита от снятия компонента с производства.

**Как с нами связаться**

**Телефон:** 8 (812) 309 58 32 (многоканальный)
**Факс:** 8 (812) 320-02-42
**Электронная почта:** org@eplast1.ru
**Адрес:** 198099, г. Санкт-Петербург, ул. Калинина, дом 2, корпус 4, литера А.