DSC1033

3.3V Low-Power CMOS Oscillator

General Description

The DSC1033 is a 3.3V fixed frequency MEMS based PureSilicon™ Oscillator. It can be factory programmed to any frequency from 1 to 150MHz.

The DSC1033 incorporates an all silicon resonator that is extremely robust and nearly immune to stress related fractures, common to crystal based oscillators. Without sacrificing the performance and stability required of today's systems, a crystal-less design allows for a higher level of reliability, making the DSC1033 ideal for rugged, industrial, and portable applications where stress, shock, and vibration can damage quartz crystal based systems.

Available in industry standard packages, the DSC1033 can be "dropped-in" to the same PCB footprint as standard crystal oscillators.

Block Diagram

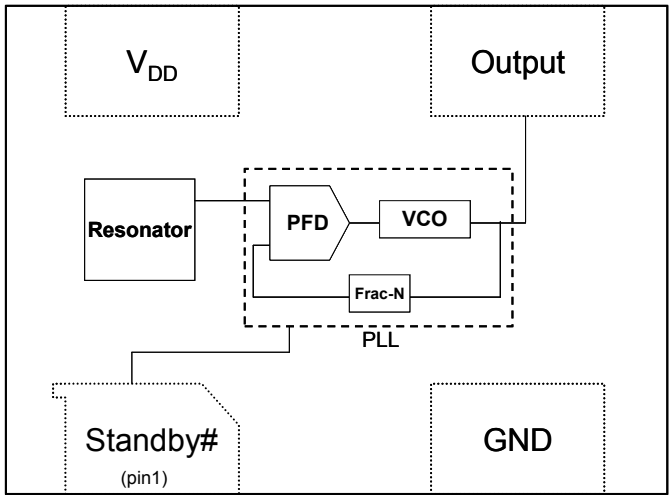

Features

- Frequency Range: 1 to 150MHz
- Exceptional Stability over Temperature
  - ±25 PPM, ±50 PPM
- Operating voltage
  - 3.0 to 3.6V
- Operating Temperature Range
  - Industrial -40ºC to 85ºC
  - Ext. Commercial -20ºC to 70ºC
  - Commercial 0ºC to 70ºC
- Low Operating and Standby Current
  - 3mA Operating (40MHz)
  - 1uA Standby
- Ultra Miniature Footprint
  - 2.5 x 2.0 x 0.85 mm
  - 3.2 x 2.5 x 0.85 mm
  - 5.0 x 3.2 x 0.85 mm
  - 7.0 x 5.0 x 0.85 mm
- Excellent Shock and Vibration Resistance
- Lead Free, RoHS & Reach SVHC Compliant

Benefits

- Pin for pin "drop in" replacement for industry standard oscillators
- Semiconductor level reliability, significantly higher than quartz
- Short mass production lead-times
- Longer Battery Life / Reduced Power
- Compact Plastic package
- Cost Effective

Applications

- Mobile Applications
- Consumer Electronics
- Portable Electronics
- CCD Clock for VTR Cameras
- Low Profile Applications
- Industrial

All Rights Reserved. No part of this document may be copied or reproduced in any form without the prior written permission of Micrel, Inc. Micrel Inc. may update or make changes to the contents, products, programs or services described at any time without notice. This document neither states nor implies any kind of warranty, including, but not limited to implied warranties of merchantability or fitness for a particular use.

Absolute Maximum Ratings[1]

Item	Min.	Max	Unit	Condition
Supply Voltage	-0.3	+4.0	V	
Input Voltage	-0.3	VDD+0.3	V	
Junction Temp	-	+150	°C	
Storage Temp	-55	+150	°C	
Soldering Temp	-	+260	°C	40 sec max.
ESD	-		V	
HBM		2000		
MM		200		
CDM		500		

Ordering Code

DSC1033 CE1 - 032.0000 T

- DSC1033: Family
- CE1: Package, Temp & Stability
- 032.0000: Output Freq 1.0 to 150MHz
- T: Tape/ Reel

* See Ordering Information for details

Recommended Operating Conditions

Parameter	Symbol	Range
Supply Voltage	V_{DD}	3.0 – 3.6V
Output Load	Z_L	R>10KΩ, C≤15pF
Operating Temperature **Option 1** **Option 2** **Option 3**	T	 -40 – +85 °C -20 – +70 °C 0 – +70 °C

Specifications

Parameter	Symbol	Condition		Min.	Typ.	Max.	Unit
Frequency	f_0	Single Frequency		1		150	MHz
Frequency Tolerance **Option 1** **Option 2** **Option 3**	Δf	 -40°C to +85°C -20°C to +70°C 0°C to +70°C				 ±25,±50 ±25,±50 ±25,±50	ppm
Supply Current, no load	I_{DD}	C_L=0p R_L=∞ T=25° C	 1 to 40MHz 40 to 80MHz 80 to 125MHz 125 to 150MHz		 3 4 5 6	 10	mA
Supply Current, standby	I_{DD}	T=25°C				1.0	uA
Output Logic Levels **Output logic high** **Output logic low**	 V_{OH} V_{OL}	C_L=15pF		 0.8*V_{DD} -		 - 0.2*V_{DD}	Volts
Output Transition time **Rise Time** **Fall Time**	 t_R t_F	C_L=15pF; T=25°C 20%/80%*V_{DD}			 1.3 1.3	 2 2	ns
Output Startup Time[2]	t_{SU}	T=25°C			1.5	3	ms
Output Disable Time	t_{DA}				20	100	ns
Output Duty Cycle	SYM			45		55	%
Input Logic Levels **Input logic high** **Input logic low**	 V_{IH} V_{IL}			 0.75*V_{DD} -		 - 0.25* V_{DD}	Volts
Jitter, Cycle to Cycle	J_{CC}	F = 100MHz[3]			95		ps

Notes:
1. Absolute maximum ratings are those values beyond which the safety of the device cannot be guaranteed. The device should not be operated beyond these limits.
2. t_{SU} is time to stable output frequency after V_{DD} is applied. t_{SU} and t_{EN} (after EN is asserted) are identical values.
3. See typical cycle to cycle jitter graph for frequency dependence.

All Rights Reserved. No part of this document may be copied or reproduced in any form without the prior written permission of Micrel, Inc. Micrel Inc. may update or make changes to the contents, products, programs or services described at any time without notice. This document neither states nor implies any kind of warranty, including, but not limited to implied warranties of merchantability or fitness for a particular use.

Nominal Performance Characteristics

3.3V Characteristics

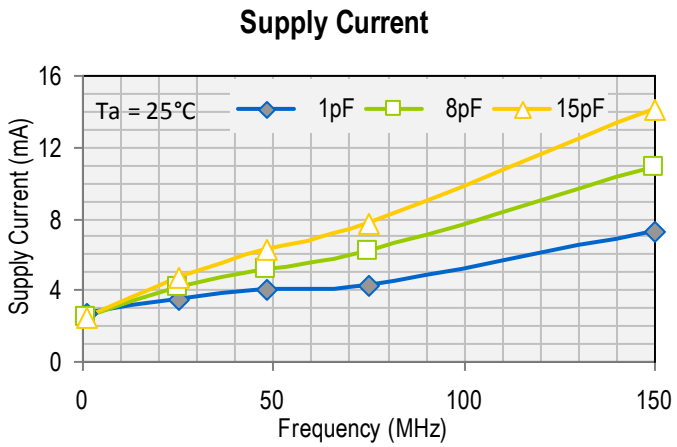

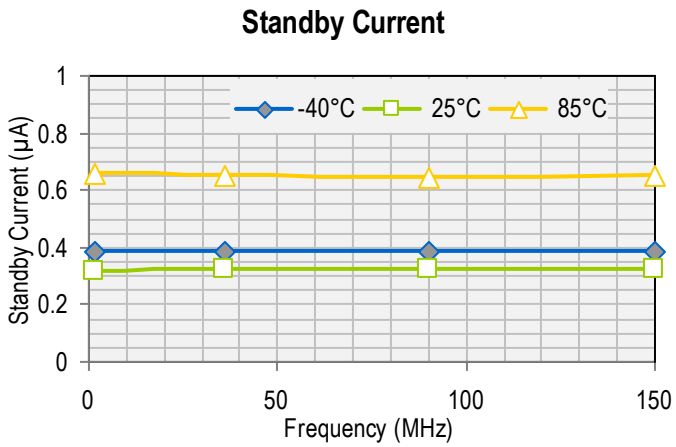

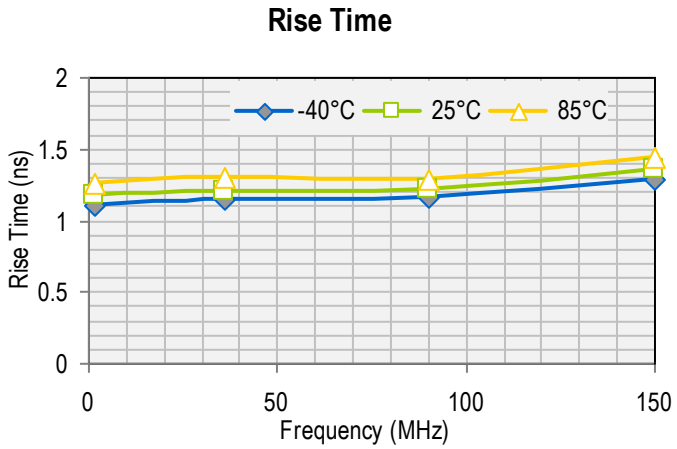

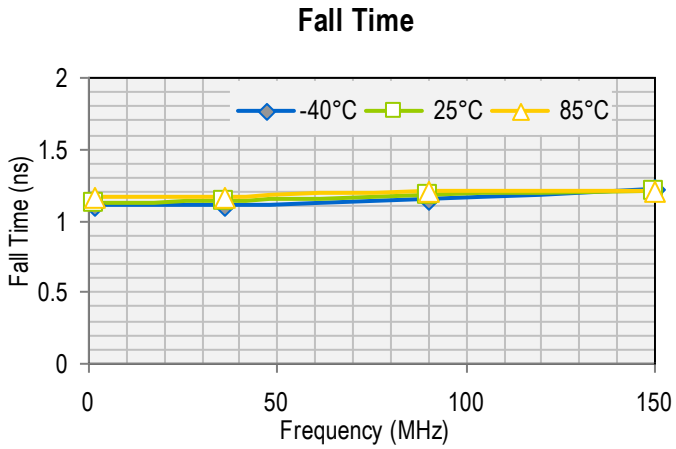

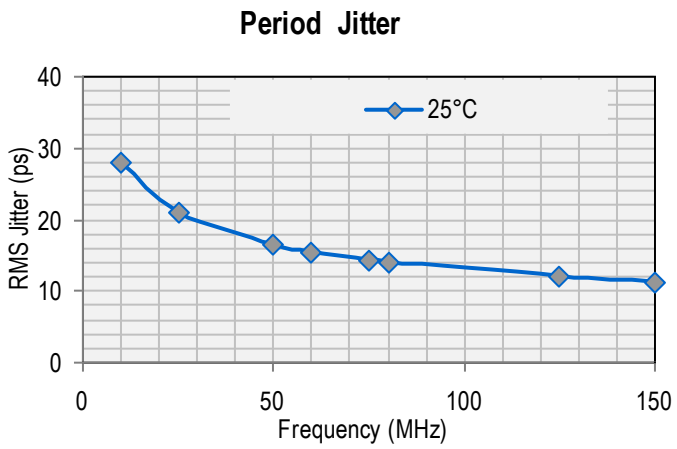

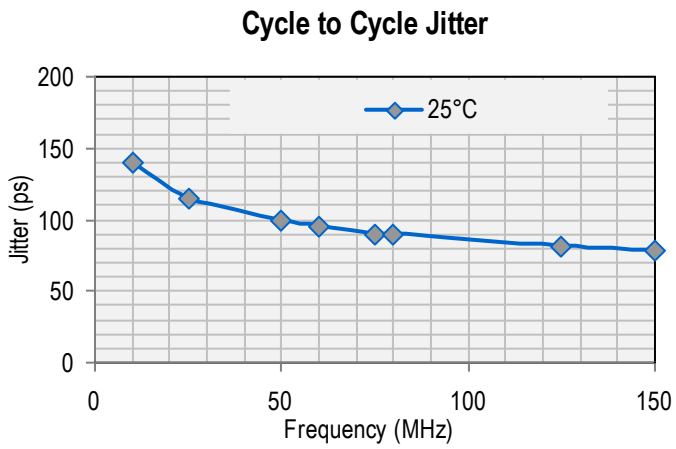

All Rights Reserved. No part of this document may be copied or reproduced in any form without the prior written permission of Micrel, Inc. Micrel Inc. may update or make changes to the contents, products, programs or services described at any time without notice. This document neither states nor implies any kind of warranty, including, but not limited to implied warranties of merchantability or fitness for a particular use.

Output Waveform

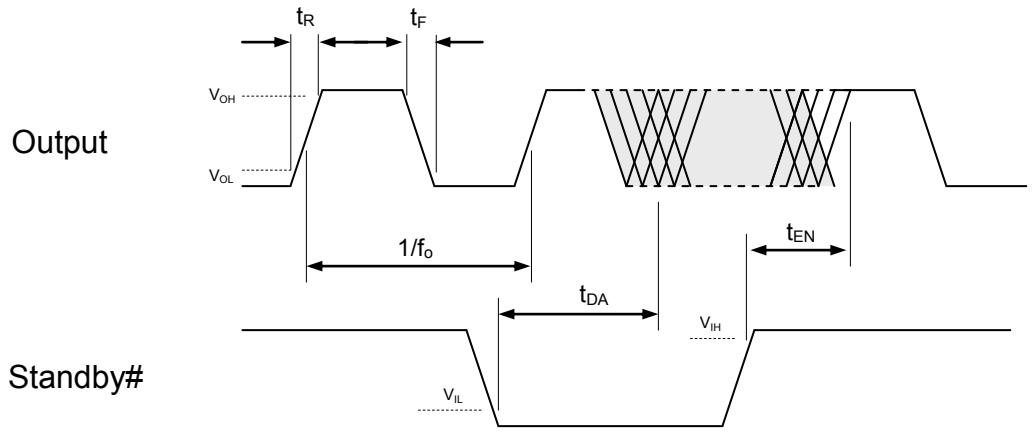

Standby Function

Standby# (pin 1)	Output (pin 3)
Hi Level	Output ON
Open (no connect)	Output ON
Low Level	High Impedance

Test Circuit

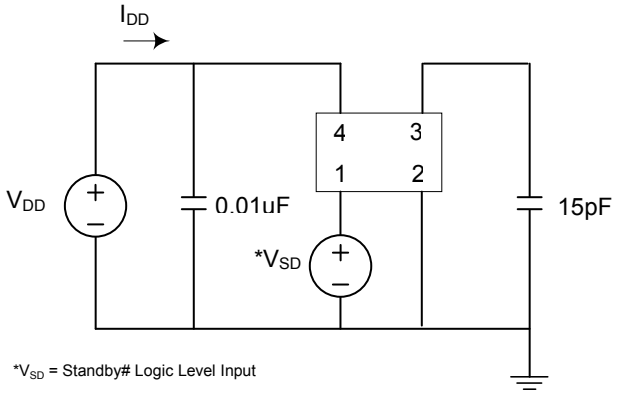

All Rights Reserved. No part of this document may be copied or reproduced in any form without the prior written permission of Micrel, Inc. Micrel Inc. may update or make changes to the contents, products, programs or services described at any time without notice. This document neither states nor implies any kind of warranty, including, but not limited to implied warranties of merchantability or fitness for a particular use.

Board Layout (recommended)

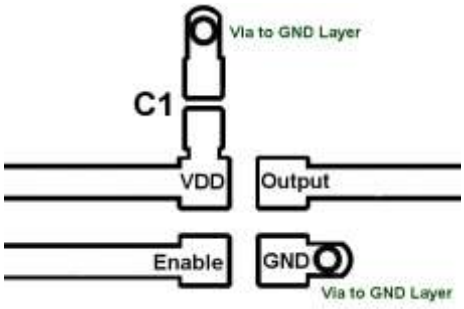

Solder Reflow Profile

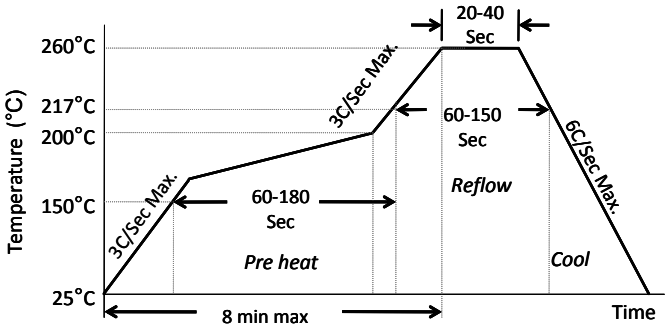

MSL 1 @ 260°C refer to JSTD-020C	
Ramp-Up Rate (200°C to Peak Temp)	3°C/Sec Max.
Preheat Time 150°C to 200°C	60-180 Sec
Time maintained above 217°C	60-150 Sec
Peak Temperature	255-260°C
Time within 5°C of actual Peak	20-40 Sec
Ramp-Down Rate	6°C/Sec Max.
Time 25°C to Peak Temperature	8 min Max.

Package Dimensions

7.0 x 5.0 mm Plastic Package

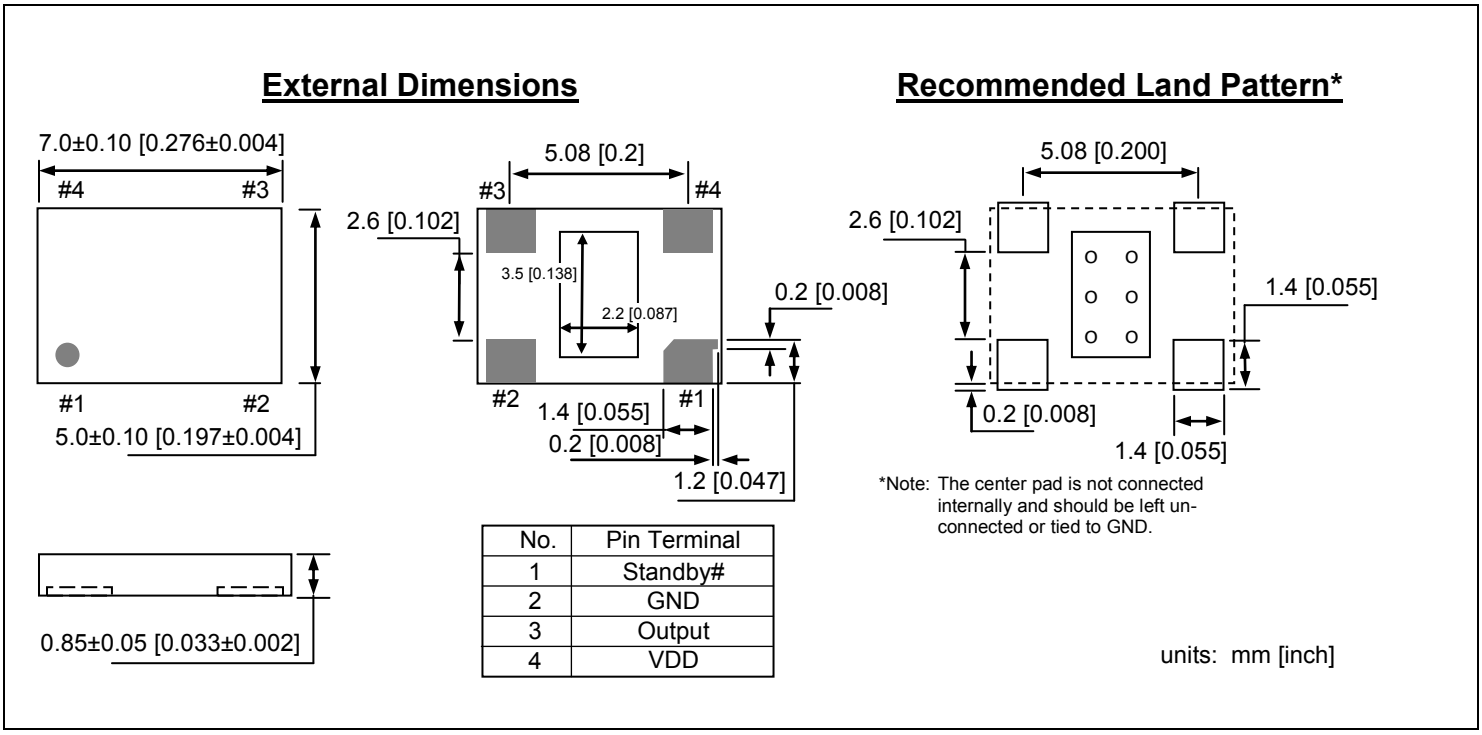

No.	Pin Terminal
1	Standby#
2	GND
3	Output
4	VDD

All Rights Reserved. No part of this document may be copied or reproduced in any form without the prior written permission of Micrel, Inc. Micrel Inc. may update or make changes to the contents, products, programs or services described at any time without notice. This document neither states nor implies any kind of warranty, including, but not limited to implied warranties of merchantability or fitness for a particular use.

5.0 x 3.2 mm Plastic Package

External Dimensions

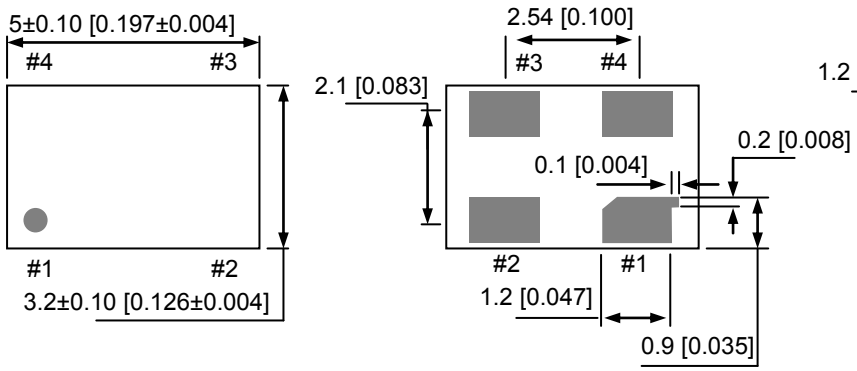

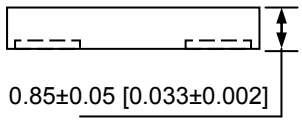

No.	Pin Terminal
1	Standby#
2	GND
3	Output
4	VDD

Recommended Land Pattern

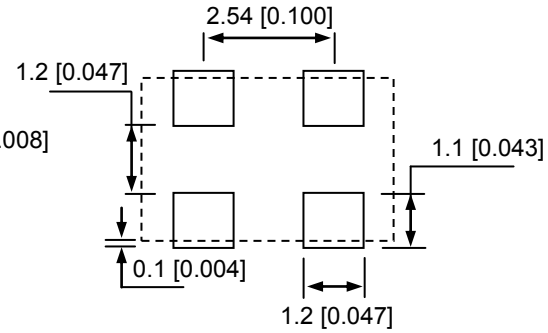

units: mm [inch]

3.2 x 2.5 mm Plastic Package

External Dimensions

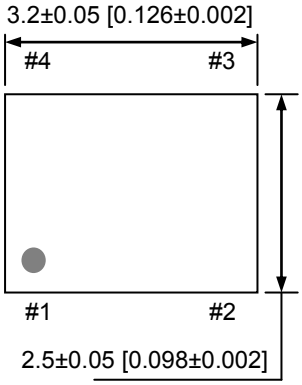

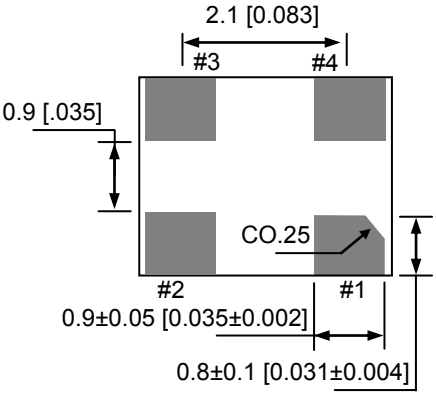

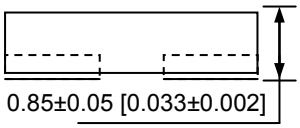

No	Pin Terminal
1	Standby#
2	GND
3	Output
4	VDD

Recommended Land Pattern

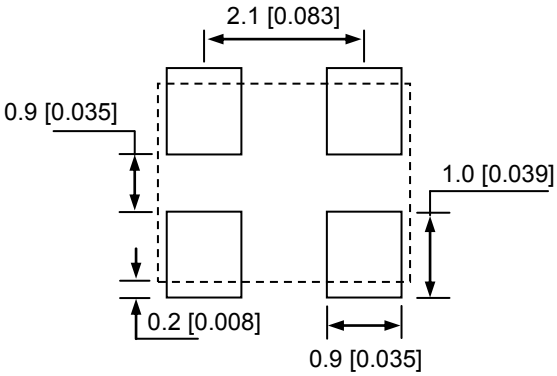

units: mm [inch]

All Rights Reserved. No part of this document may be copied or reproduced in any form without the prior written permission of Micrel, Inc. Micrel Inc. may update or make changes to the contents, products, programs or services described at any time without notice. This document neither states nor implies any kind of warranty, including, but not limited to implied warranties of merchantability or fitness for a particular use.

2.5 x 2.0 mm Plastic Package

External Dimensions

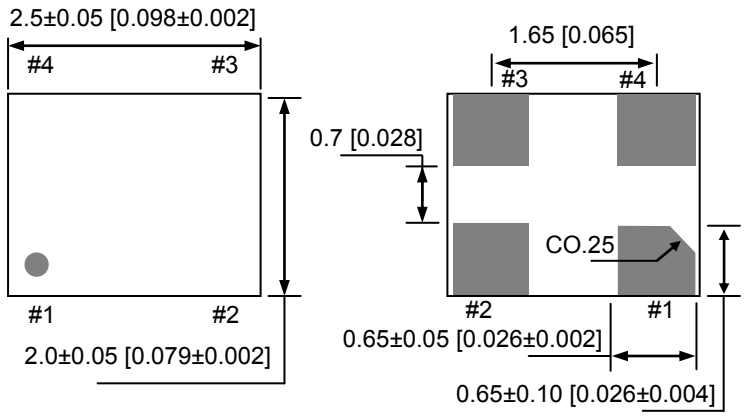

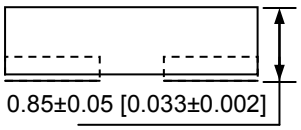

No	Pin Terminal
1	Standby#
2	GND
3	Output
4	VDD

Recommended Land Pattern

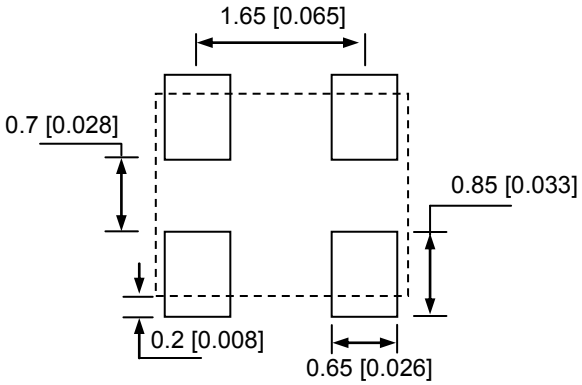

units: mm [inch]

Ordering Information

DSC1033 PTS – xxx.xxxx T

PART NUMBERING GUIDE				
Package (Plastic QFN)	**Temperature**	**Stability**	**Frequency**	**Packing Option**
P=A: 7.0x5.0mm **P=B:** 5.0x3.2mm **P=C:** 3.2x2.5mm **P=D:** 2.5x2.0mm	**T=C:** 0° ~ +70° C **T=E:** -20° ~ +70° C **T=I:** -40° ~ +85° C	**S=1:** ±50ppm **S=2:** ±25ppm	**XXX.XXXX** (4 decimal places)	**Blank:** Tubes **T:** Tape & Reel

Example: DSC1033CE1–123.0000T

The example part number above is a 123.0000MHz oscillator in Plastic 3.2x2.5mm package, with ±50ppm stability over an operating temperature of -20 to +70°C, shipped in Tape and Reel. The reel size (7" or 13" diameter) will be determined by the factory based on quantity.

Disclaimer:

Micrel makes no representations or warranties with respect to the accuracy or completeness of the information furnished in this data sheet. This information is not intended as a warranty and Micrel does not assume responsibility for its use. Micrel reserves the right to change circuitry, specifications and descriptions at any time without notice. No license, whether express, implied, arising by estoppel or otherwise, to any intellectual property rights is granted by this document. Except as provided in Micrel's terms and conditions of sale for such products, Micrel assumes no liability whatsoever, and Micrel disclaims any express or implied warranty relating to the sale and/or use of Micrel products including liability or warranties relating to fitness for a particular purpose, merchantability, or infringement of any patent, copyright or other intellectual property right.

MICREL, Inc. • **2180 Fortune Drive, San Jose, California 95131** • **USA**
Phone: +1 (408) 944-0800 • **Fax: +1 (408) 474-1000** • **Email: hbwhelp@micrel.com** • **www.micrel.com**

All Rights Reserved. No part of this document may be copied or reproduced in any form without the prior written permission of Micrel, Inc. Micrel Inc. may update or make changes to the contents, products, programs or services described at any time without notice. This document neither states nor implies any kind of warranty, including, but not limited to implied warranties of merchantability or fitness for a particular use.

Компания «ЭлектроПласт» предлагает заключение долгосрочных отношений при поставках импортных электронных компонентов на взаимовыгодных условиях!

Наши преимущества:

- Оперативные поставки широкого спектра электронных компонентов отечественного и импортного производства напрямую от производителей и с крупнейших мировых складов;
- Поставка более 17-ти миллионов наименований электронных компонентов;
- Поставка сложных, дефицитных, либо снятых с производства позиций;
- Оперативные сроки поставки под заказ (от 5 рабочих дней);
- Экспресс доставка в любую точку России;
- Техническая поддержка проекта, помощь в подборе аналогов, поставка прототипов;
- Система менеджмента качества сертифицирована по Международному стандарту ISO 9001;
- Лицензия ФСБ на осуществление работ с использованием сведений, составляющих государственную тайну;
- Поставка специализированных компонентов (Xilinx, Altera, Analog Devices, Intersil, Interpoint, Microsemi, Aeroflex, Peregrine, Syfer, Eurofarad, Texas Instrument, Miteq, Cobham, E2V, MA-COM, Hittite, Mini-Circuits,General Dynamics и др.);

Помимо этого, одним из направлений компании «ЭлектроПласт» является направление «Источники питания». Мы предлагаем Вам помощь Конструкторского отдела:

- Подбор оптимального решения, техническое обоснование при выборе компонента;
- Подбор аналогов;
- Консультации по применению компонента;
- Поставка образцов и прототипов;
- Техническая поддержка проекта;
- Защита от снятия компонента с производства.

Как с нами связаться

Телефон: 8 (812) 309 58 32 (многоканальный)
Факс: 8 (812) 320-02-42
Электронная почта: org@eplast1.ru
Адрес: 198099, г. Санкт-Петербург, ул. Калинина, дом 2, корпус 4, литера А.