Honeywell

LLE Series

Liquid level sensors

DESCRIPTION

The enhanced series of liquid level sensors incorporates a photo-transistor trigger which provides a digital output that denotes the presence or absence of liquid.

The mode of operation is derived from the principle of total internal reflection. An LED and photo-transistor are housed within a plastic dome at the head of the device. When no liquid is present, light from the LED is internally reflected from the dome to the photo-transistor. When liquid covers the dome, the effective refractive index at the dome-liquid boundary changes, allowing some light from the LED to escape. Thus the amount of light received by the photo-transistor is reduced and the output switches, indicating the presence of liquid. This method of liquid level sensing is very fast, and almost instantaneous for water.

FEATURES

- Solid state technology
- Small size
- Digital output
- Pre-wired
- Electrically robust

BENEFITS

- Accurate, repeatable switching point
- Can be mounted in applications where space is limited
- Microprocessor compatible
- Easy to install, saving assembly time
- Reverse polarity, over voltage, short circuit and transient protection

TYPICAL APPLICATIONS

- Home appliances
- Spa baths
- Vending machines
- Food and beverage
- Medical
- Compressors
- Machine tools
- Automotive

ORDER GUIDE

		Catalogue Listing	
Description		**Standard temperature**	**High temperature**
Screw In, M12 Thread, Plastic	(Type 1)	LLE101000	LLE101101
	(Type 2)	LLE102000	LLE102101
	(Type 3)	LLE103000	LLE103101
Push In, Plastic	(Type 5)	LLE105000	LLE105100
Screw In, ½ in, Metal	Nickel plated brass	LLE205000	LLE205100
	Stainless steel	LLE305000	LLE305100

LLE Series

TECHNICAL INFORMATION

Specifications		
Operation mode	User defined single point on/off switch (Output is high in air)	
Repeatability (mm)	± 1	
Hysteresis (mm)	2 (dependent on liquid)	
Response time	Rising liquid level - 50 µs Falling liquid level - 1 s max (in ethanol) Response in other liquids dependent on viscosity	
Mechanical		
Mounting	Type 1 and 2 - mounted from outside; Type 3 and 5 - mounted from inside	
Termination	250 mm flying leads (180 mm for metal versions)	
	Blue 0 V	
	Red +5 V to +12 V supply	
	Green Output	
Material [Note 1]	Polysulphone	
Dimensions	**Plastic** **LLE101/102/103 Series**	**Metal** **LLE205/305 Series**
Dome	3,5 mm radius (includes LLE105 Series)	
Thread	M12x1	½ in BSPT
Hex	19 mm	24 mm (See mounting drawings on page 3)
Environmental	**Standard temperature**	**High temperature**
Operating temperature (°C)	-25 to 80 (-13 °F to 176 °F)	-40 to 125 (-40 °F to 257 °F)
Storage temperature (°C)	-30 to 85 (-22 °F to 185 °F)	-40 to 125 (-40 °F to 257 °F)
Thermal testing	As per BS EN60068-2-33	
Humidity	As per BS EN60068-2-30	
Vibration	As per BS EN60068-2-6 Part S3: 1996	
Mechanical shock	As per BS EN60068-2-27 Part 2 Ea: 1987	
Pressure range (bar)	0 to 5 (plastic housing) [Note 2] 0 to 25 (metal housing)	
Ambient IR light limit (@ 940 nm) [Note 3]	10 mW/cm^2 in operation	
Electrical	**Standard temperature**	**High temperature**
Supply voltage (Vcc)	+5 Vdc to +12 Vdc ± 5 %	
Supply current (mA)	15 mA nominal @ +5 Vdc	5 mA nominal @ +5 Vdc
Output sink current [Note 4]	@ 25 °C 10 mA max.	@ 25 °C 40 mA max.
@ 5 Vdc supply	@ 80 °C 3 mA max.	@ 125 °C 7 mA max.

Notes:

[Note 1] Material compatibility information available on request.

[Note 2] Threaded sensors only.

[Note 3] For other ambient light environments the user should test the sensor under application conditions to verify compatibility.

[Note 4] The output is intended as a TTL compatible output signal, for interfacing to logic systems. For interfacing with other types of circuitry an appropriate buffer circuit must be used.

MOUNTING DRAWING (IN MM AND INCHES)

LLE101000/LLE101101 (Type 1)

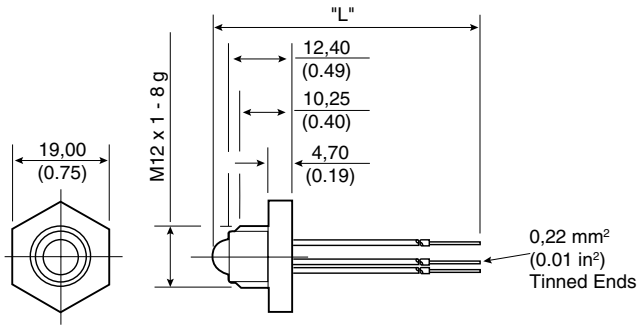

LLE102000/LLE102101 (Type 2)

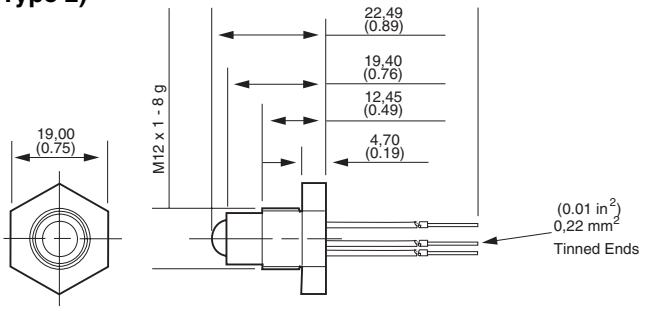

Notes

1 Recommended panel hole size Ø 12,5 ±0.3 mm (0.49 ±0.01 in)
2 'O' ring seal supplied Unassembled

LLE103000/LLE103101 (Type 3)

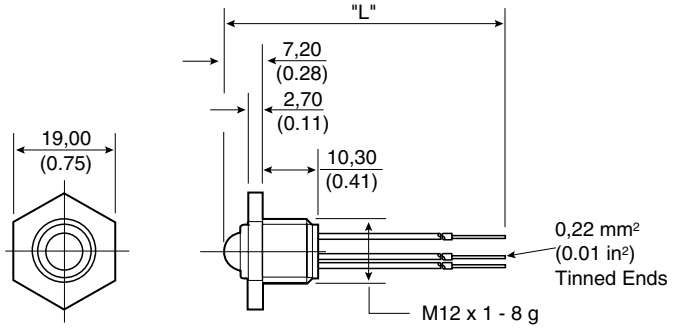

LLE105000/LLE105100 (Type 5)

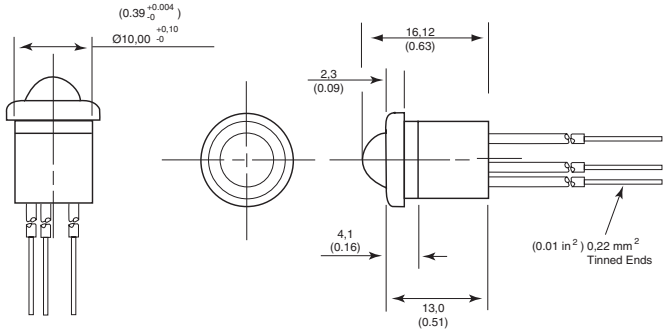

LLE205000/LLE205100 LLE305000/LLE305100

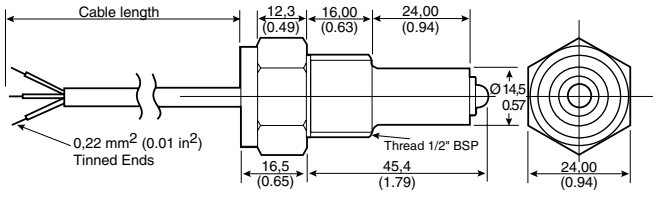

ELECTRICAL DIAGRAM

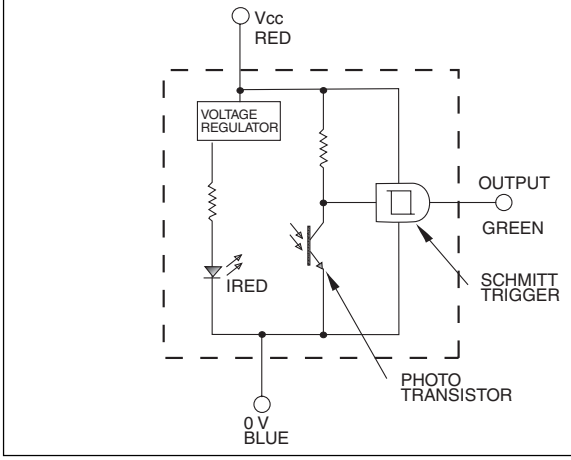

⚠ WARNING

MISUSE OF DOCUMENTATION

- The information presented in this product sheet is for reference only. Do not use this document as a product installation guide.
- Complete installation, operation, and maintenance information is provided in the instructions supplied with each product.

Failure to comply with these instructions could result in death or serious injury.

⚠ WARNING

PERSONAL INJURY

DO NOT USE these products as safety or emergency stop devices or in any other application where failure of the product could result in personal injury.

Failure to comply with these instructions could result in death or serious injury.

WARRANTY/REMEDY

Honeywell warrants goods of its manufacture as being free of defective materials and faulty workmanship. Honeywell's standard product warranty applies unless agreed to otherwise by Honeywell in writing; please refer to your order acknowledgement or consult your local sales office for specific warranty details. If warranted goods are returned to Honeywell during the period of coverage, Honeywell will repair or replace, at its option, without charge those items it finds defective. **The foregoing is buyer's sole remedy and is in lieu of all warranties, expressed or implied, including those of merchantability and fitness for a particular purpose. In no event shall Honeywell be liable for consequential, special, or indirect damages.**

While we provide application assistance personally, through our literature and the Honeywell web site, it is up to the customer to determine the suitability of the product in the application.

Specifications may change without notice. The information we supply is believed to be accurate and reliable as of this printing. However, we assume no responsibility for its use.

SALES AND SERVICE

Honeywell serves its customers through a worldwide network of sales offices, representatives and distributors. For application assistance, current specifications, pricing or name of the nearest Authorized Distributor, contact your local sales office or:

E-mail: info.sc@honeywell.com

Internet: www.honeywell.com/sensing

Phone and Fax:

Asia Pacific	+65 6355-2828
	+65 6445-3033 Fax
Europe	+44 (0) 1698 481481
	+44 (0) 1698 481676 Fax
Latin America	+1-305-805-8188
	+1-305-883-8257 Fax
USA/Canada	+1-800-537-6945
	+1-815-235-6847
	+1-815-235-6545 Fax

Automation and Control Solutions
Sensing and Control
Honeywell
Newhouse Industrial Estate
Motherwell, ML1 5SB, UK
www.honeywell.com

Honeywell

100437-EN UK07 GLO
Issue 3 June 2005
Copyright 2001-2005 Honeywell International Inc.

Компания «ЭлектроПласт» предлагает заключение долгосрочных отношений при поставках импортных электронных компонентов на взаимовыгодных условиях!

Наши преимущества:

- Оперативные поставки широкого спектра электронных компонентов отечественного и импортного производства напрямую от производителей и с крупнейших мировых складов;
- Поставка более 17-ти миллионов наименований электронных компонентов;
- Поставка сложных, дефицитных, либо снятых с производства позиций;
- Оперативные сроки поставки под заказ (от 5 рабочих дней);
- Экспресс доставка в любую точку России;
- Техническая поддержка проекта, помощь в подборе аналогов, поставка прототипов;
- Система менеджмента качества сертифицирована по Международному стандарту ISO 9001;
- Лицензия ФСБ на осуществление работ с использованием сведений, составляющих государственную тайну;
- Поставка специализированных компонентов (Xilinx, Altera, Analog Devices, Intersil, Interpoint, Microsemi, Aeroflex, Peregrine, Syfer, Eurofarad, Texas Instrument, Miteq, Cobham, E2V, MA-COM, Hittite, Mini-Circuits,General Dynamics и др.);

Помимо этого, одним из направлений компании «ЭлектроПласт» является направление «Источники питания». Мы предлагаем Вам помощь Конструкторского отдела:

- Подбор оптимального решения, техническое обоснование при выборе компонента;
- Подбор аналогов;
- Консультации по применению компонента;
- Поставка образцов и прототипов;
- Техническая поддержка проекта;
- Защита от снятия компонента с производства.

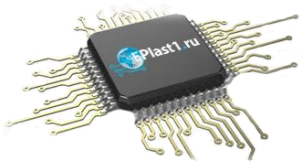

Как с нами связаться

Телефон: 8 (812) 309 58 32 (многоканальный)
Факс: 8 (812) 320-02-42
Электронная почта: org@eplast1.ru
Адрес: 198099, г. Санкт-Петербург, ул. Калинина, дом 2, корпус 4, литера А.