Type THA,ThinPack, Aluminum Electrolytic Capacitor, 85 ºC

High Energy Density, REACH and RoHS Compliant

Type THA now has longer life!

At 8.2 mm thin, type THA Thinpack offers the highest energy density available in a low profile aluminum electrolytic. It's ideal for the lowest profile circuits where high capacitance is needed for bulk storage. Look to type THA to replace arrays of SMT solid tantalum or aluminum electrolytic capacitors.

Highlights

- 8.2 mm profile
- Very high energy density (up to 1.1 J/cc)
- 5000 hr life @ 85 ºC (All 2020 production and beyond)
- REACH and RoHS Compliant

Specifications

Temperature Range	–55 °C to +85 °C ≤300 Vdc; -40 ºC to 85 ºC ≥350 Vdc
Rated Voltage Range	10 Vdc to 450 Vdc
Capacitance Range	60 µF to 18000 µF
Capacitance Tolerance	±20%
Leakage Current	≤ 0.002 CV µA, @ 25 °C and 5 mins. at rated voltage
Ripple Current Multipliers	

Ambient Temperature Multipliers

Temp	45	55	65	75	85
0-300 VDC	1.30	1.25	1.00	0.70	0.20
301-450 VDC	1.15	1.10	1.00	0.60	0.20

Ambient Air Temperature Multipliers (No heat sink)

Air Velocity m/sec	0.25	1.00	2.50	5.00
Ripple Current Multiplier	1.00	1.20	1.40	1.50

Frequency Multipliers

Rated Vdc/Freq	50	60	120	360	1000	5000	20000
10-35	0.72	0.77	1.00	1.06	1.06	1.10	1.10
36-60	0.70	0.75	1.00	1.06	1.10	1.20	1.20
61-100	0.70	0.75	1.00	1.06	1.10	1.30	1.30
101-300	0.70	0.75	1.00	1.20	1.45	1.70	1.70
301-450	0.70	0.75	1.00	1.20	1.45	1.80	1.80

Low Temperature Characteristics	Impedance ratio: $Z_{-55\,°C}/Z_{+25\,°C}$ @120 Hz ≤10 (5 - 20 Vdc), ≤3 (25 - 300 Vdc) $Z_{-40\,°C}/Z_{+25\,°C}$ @120 Hz ≤10 (≥350 Vdc)
DC Life Test	5000 h @ rated voltage at 85 °C Δ Capacitance ±20% (<50 Vdc) Δ Capacitance ±10% (≥50 Vdc) ESR 200% of limit DCL ≤ 0.004 CV µA
Shelf Life Test	5 yrs @ 40 ºC Capacitance 100% of limit ESR 100% of limit DCL ≤ 0.004 CV µA

Vibration *Mounting: Vibration capability is dependent upon mounting restraint.*	All Sizes = 10g
Vibration Test	**Level** The specimens, while deenergized or operating under the load conditions specified, shall be subjected to the vibration amplitude, frequency range, and duration specified for each case size. **Amplitude** The specimens shall be subjected to a simple harmonic motion having an amplitude of either 0.06-inch double amplitude (maximum total excursion) or peak level specified above, whichever is less. The tolerance on vibration amplitude shall be ±10 percent. **Frequency Range** The vibration frequency shall be varied logarithmically between the approximate limits of 10 to 2,000 Hz. **Sweep Time and Duration** The entire frequency range of 10 to 2,000 Hz and return to 10 Hz shall be traversed in 20 minutes. This cycle shall be performed 12 times in each of three mutually perpendicular directions (total of 36 times), so that the motion shall be applied for a total period of approximately 12 hours. Interruptions are permitted provided the requirements for rate of change and test duration are met.
Thermal Resistance	

		Thermal Resistance (°C/W) by Case Length			
# of Sides heatsinked	***Insulation***	***36.4 (mm)***	***45.9 (mm)***	***53.8 (mm)***	***66.5 (mm)***
One Side	Bare can	5.42	4.27	3.65	2.96
	Polyester	6.60	5.20	4.44	3.60
Both Sides	Bare can	4.36	3.41	2.90	2.34
	Polyester	4.95	3.87	3.30	2.66

Typical Weight	Case AA - 14g, Case AB - 16g, Case AC - 18g, Case AD - 20g
Terminals	20 AWG copper wire with tin electroplate, 15 amps max
Case Material	Aluminum
Ripple Current Capability	The max ripple current capability is set by the target core temperature of 85 °C. The Peak to Peak ac must be less than Vr/5.
Air Cooled	The ripple currents in the ratings tables are for 65 °C ambient temperatures.
Heatsink Cooled	Temperature rise from the hottest internal spot, the core, to ambient air is $\Delta T = I^2(\text{Max ESR})(\theta cc + \theta ca)$, recommended max ΔT of 20 °C where θcc is the thermal resistance from core to case and θca from case to ambient. To calculate maximum ripple capability with the THA attached to a heatsink use the maximum core temperature and the values for θcc.
Example	As an illustration, suppose you operate an noninsulated THA132M060AA0C in 65 °C air and attach it to a commercial heatsink with a free-air thermal resistance of 2.7 °C/W. Use a good thermal grease between the capacitor and the heatsink, and the total thermal resistance is 2.7 + 5.42 or 8.12 ° C/W. The power which would heat the core to 85 °C is (85 - 65)/8.12 or 2.46 W. For an ESR of 117 mΩ, 2.46 W equates to a ripple current of 4.58 A.

Type THA,ThinPack, Aluminum Electrolytic Capacitor, 85 ºC

Part Numbering System

THA	412	M	025	AA	0	C
Type	**Capacitance**	**Tolerance**	**Rated Voltage**	**Case Code**	**Insulation**	**Mounting Style**
THA	**322** =3200 µF **222** = 2200 µF **162** = 1600 µF	**M=**±20%	**025** = 25 Vdc **075** = 75 Vdc **150** = 150 Vdc **200** = 200 Vdc	**AA** = 36.4 mm **AB** = 45.9 mm **AC** = 53.8 mm **AD** = 66.5 mm	**0** = bare can **1** = polywrap	**C** = two leads

Outline Drawing

Note: The polyester tape wrap may add up to 0.020 inches to the thickness and width of the capacitor.

Style C: No Tabs

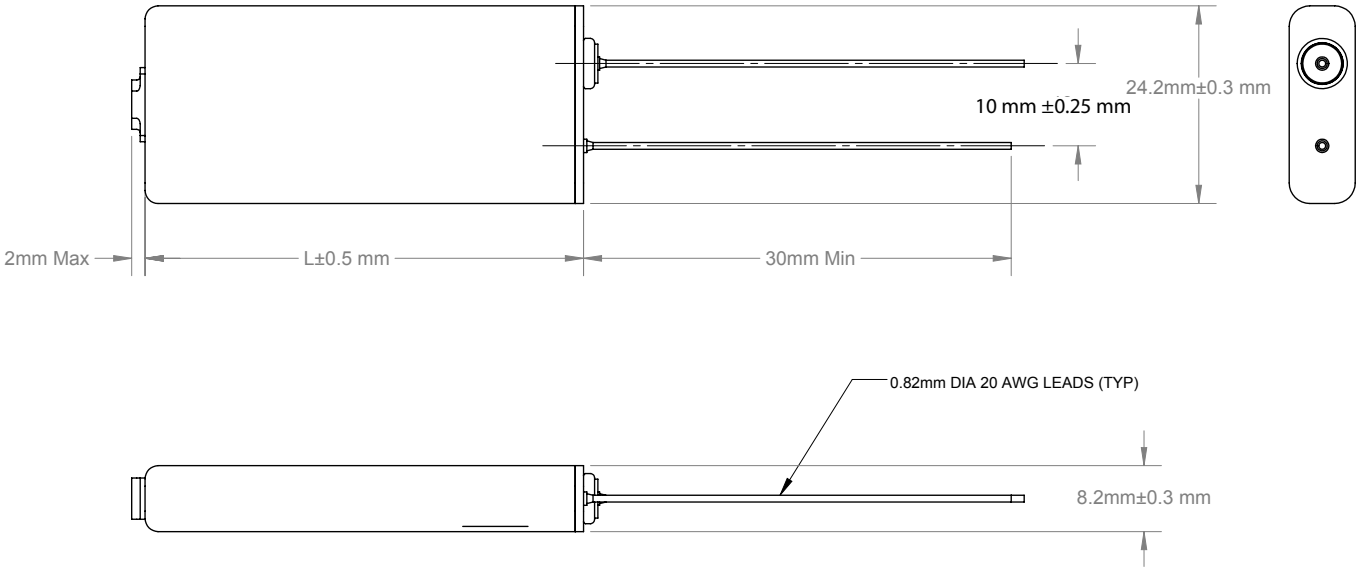

Type THA,ThinPack, Aluminum Electrolytic Capacitor, 85 °C

Ratings

Voltage	Cap (µF)	Catalog Part Number	Length	ESR max 25 °C (Ω) 120 Hz	ESR max 25 °C (Ω) 20 kHz	Ripple (A) Ambient @ 65°C 120 Hz	Ripple (A) Ambient @ 65°C 20 kHz
10 Vdc @ 85 °C 12 Vdc Surge @ 25 °C	8500	THA852M010AA0C	36.4	0.12	0.09	1.90	2.09
	11000	THA113M010AB0C	45.9	0.08	0.07	1.90	2.09
	14000	THA143M010AC0C	53.8	0.07	0.06	2.50	2.75
	18000	THA183M010AD0C	66.5	0.05	0.04	3.30	3.63
16 Vdc @ 85 °C 19.2 Vdc Surge @ 25 °C	6300	THA632M016AA0C	36.4	0.12	0.09	1.90	2.09
	8700	THA872M016AB0C	45.9	0.08	0.07	2.10	2.31
	10000	THA103M016AC0C	53.8	0.07	0.06	2.50	2.75
	13000	THA133M016AD0C	66.5	0.05	0.04	3.30	3.63
20 Vdc @ 85 °C 24 Vdc Surge @ 25 °C	5000	THA502M020AA0C	36.4	0.12	0.09	1.90	2.09
	7000	THA702M020AB0C	45.9	0.08	0.07	2.10	2.31
	8600	THA862M020AC0C	53.8	0.07	0.06	2.50	2.75
	11000	THA113M020AD0C	66.5	0.05	0.04	3.30	3.63
25 Vdc @ 85 °C 30 Vdc Surge @ 25 °C	4100	THA412M025AA0C	36.4	0.12	0.09	1.90	2.09
	5700	THA572M025AB0C	45.9	0.08	0.07	2.40	2.64
	7000	THA702M025AC0C	53.8	0.07	0.06	2.50	2.75
	9000	THA902M025AD0C	66.5	0.05	0.04	3.30	3.30
30 Vdc @ 85 °C 36 Vdc Surge @ 25 °C	3300	THA332M030AA0C	36.4	0.12	0.09	1.90	2.09
	4600	THA462M030AB0C	45.9	0.08	0.07	2.40	2.64
	5700	THA572M030AC0C	53.8	0.07	0.06	2.80	3.08
	7400	THA742M030AD0C	66.5	0.05	0.04	3.30	3.63
35 Vdc @ 85 °C 42 Vdc Surge @ 25 °C	2600	THA262M035AA0C	36.4	0.12	0.09	1.90	2.09
	3600	THA362M035AB0C	45.9	0.08	0.07	2.40	2.64
	4400	THA442M035AC0C	53.8	0.07	0.06	2.80	3.08
	5800	THA582M035AD0C	66.5	0.05	0.04	3.50	3.85
40 Vdc @ 85 °C 48 Vdc Surge @ 25 °C	2300	THA232M040AA0C	36.4	0.12	0.09	1.70	2.04
	3200	THA322M040AB0C	45.9	0.08	0.07	2.20	2.64
	4000	THA402M040AC0C	53.8	0.07	0.06	2.50	3.00
	5200	THA522M040AD0C	66.5	0.05	0.04	3.00	3.60
50 Vdc @ 85 °C 60 Vdc Surge @ 25 °C	1600	THA162M050AA0C	36.4	0.12	0.09	1.70	2.04
	2200	THA222M050AB0C	45.9	0.08	0.07	2.20	2.64
	2700	THA272M050AC0C	53.8	0.07	0.06	2.50	3.00
	3500	THA352M050AD0C	66.5	0.05	0.04	2.90	3.48
60 Vdc @ 85 °C 72 Vdc Surge @ 25 °C	1300	THA132M060AA0C	36.4	0.12	0.09	1.70	2.04
	1800	THA182M060AB0C	45.9	0.08	0.07	2.20	2.64
	2300	THA232M060AC0C	53.8	0.07	0.06	2.50	3.00
	3000	THA302M060AD0C	66.5	0.05	0.04	3.30	3.96
75 Vdc @ 85 °C 90 Vdc Surge @ 25 °C	730	THA731M075AA0C	36.4	0.29	0.19	1.10	1.43
	1000	THA102M075AB0C	45.9	0.21	0.14	1.40	1.82
	1200	THA122M075AC0C	53.8	0.17	0.11	1.60	2.08
	1600	THA162M075AD0C	66.5	0.13	0.09	2.00	2.60
100 Vdc @ 85 °C 120 Vdc Surge @ 25 °C	580	THA581M100AA0C	36.4	0.29	0.19	1.10	1.43
	800	THA801M100AB0C	45.9	0.21	0.14	1.40	1.82
	980	THA981M100AC0C	53.8	0.17	0.11	1.60	2.08
	1200	THA122M100AD0C	66.5	0.13	0.09	2.00	2.60

Type THA,ThinPack, Aluminum Electrolytic Capacitor, 85 °C

Voltage	Cap (µF)	Catalog Part Number	Length	ESR max 25 °C (Ω) 120 Hz	ESR max 25 °C (Ω) 20 kHz	Ripple (A) Ambient @ 65°C 120 Hz	Ripple (A) Ambient @ 65°C 20 kHz
150 Vdc @ 85 °C 180 Vdc Surge @ 25 °C	330	THA331M150AA0C	36.4	0.80	0.40	0.60	1.02
	450	THA451M150AB0C	45.9	0.58	0.29	0.80	1.36
	560	THA561M150AC0C	53.8	0.47	0.24	0.90	1.53
	730	THA731M150AD0C	66.5	0.37	0.18	1.20	2.04
200 Vdc @ 85 °C 240 Vdc Surge @ 25 °C	170	THA171M200AA0C	36.4	0.90	0.45	0.60	1.02
	230	THA231M200AB0C	45.9	0.65	0.33	0.80	1.36
	280	THA281M200AC0C	53.8	0.53	0.27	0.90	1.53
	370	THA371M200AD0C	66.5	0.41	0.21	1.10	1.87
250 Vdc @ 85 °C 300 Vdc Surge @ 25 °C	140	THA141M250AA0C	36.4	0.90	0.45	0.60	1.02
	190	THA191M250AB0C	45.9	0.65	0.33	0.80	1.36
	240	THA241M250AC0C	53.8	0.53	0.27	0.90	1.53
	310	THA311M250AD0C	66.5	0.41	0.21	1.10	1.87
300 Vdc @ 85 °C 350 Vdc Surge @ 25 °C	110	THA111M300AA0C	36.4	0.90	0.45	0.60	1.02
	160	THA161M300AB0C	45.9	0.65	0.33	0.80	1.36
	190	THA191M300AC0C	53.8	0.53	0.27	0.90	1.53
	250	THA251M300AD0C	66.5	0.41	0.21	1.10	1.87
350 Vdc @ 85 °C 400 Vdc Surge @ 25 °C	90	THA900M350AA0C	36.4	2.45	1.18	0.40	0.72
	130	THA131M350AB0C	45.9	1.78	0.85	0.50	0.90
	160	THA161M350AC0C	53.8	1.45	0.70	0.60	1.08
	210	THA211M350AD0C	66.5	1.12	0.54	0.80	1.44
400 Vdc @ 85 °C 450 Vdc Surge @ 25 °C	80	THA800M400AA0C	36.4	2.45	1.18	0.40	0.72
	110	THA111M400AB0C	45.9	1.78	0.85	0.50	0.90
	140	THA141M400AC0C	53.8	1.45	0.70	0.60	1.08
	180	THA181M400AD0C	66.5	1.12	0.54	0.80	1.44
450 Vdc @ 85 °C 500 Vdc Surge @ 25 °C	60	THA600M450AA0C	36.4	2.45	1.18	0.40	0.72
	90	THA900M450AB0C	45.9	1.78	0.85	0.50	0.90
	110	THA111M450AC0C	53.8	1.45	0.70	0.60	1.08
	140	THA141M450AD0C	66.5	1.12	0.54	0.80	1.44

Typical Performance Curves

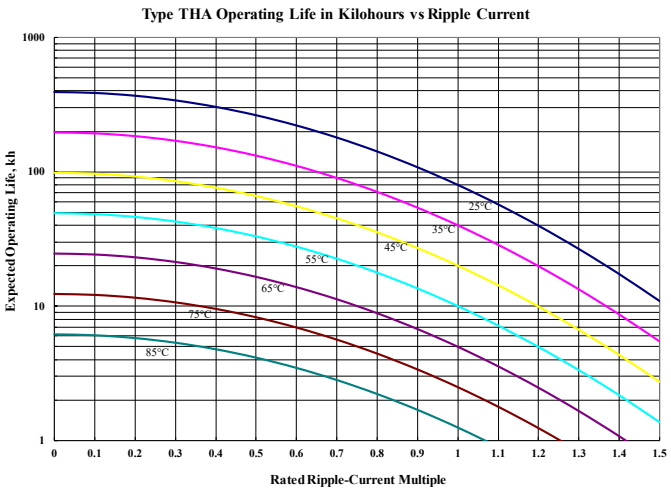

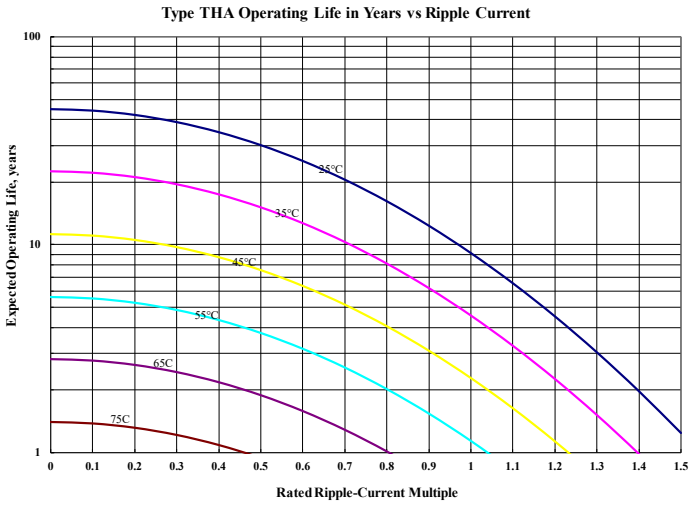

Typical Performance Curves

THA272M060AC0C

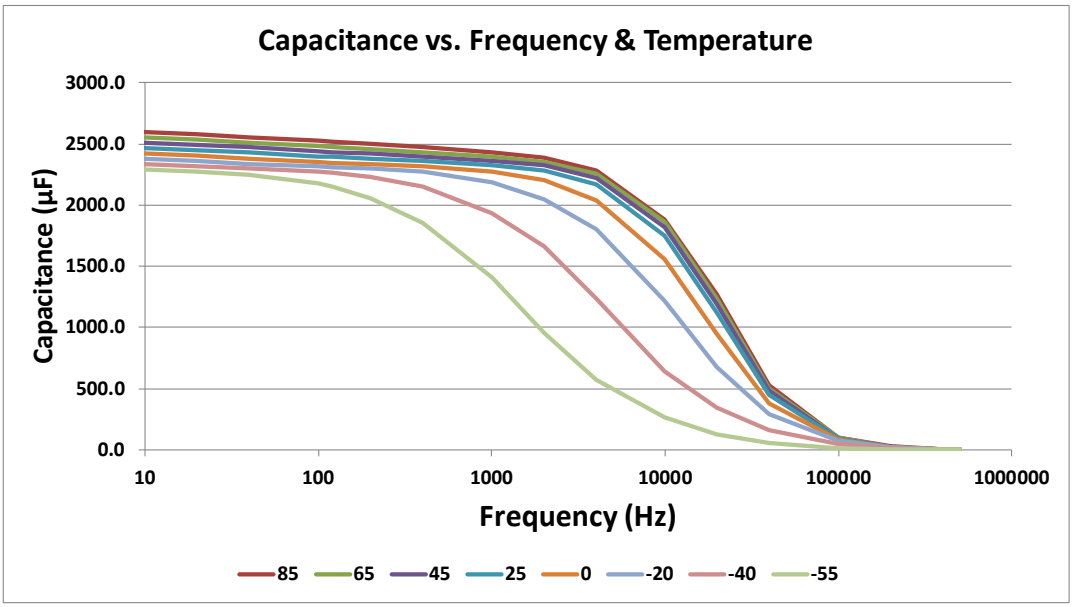

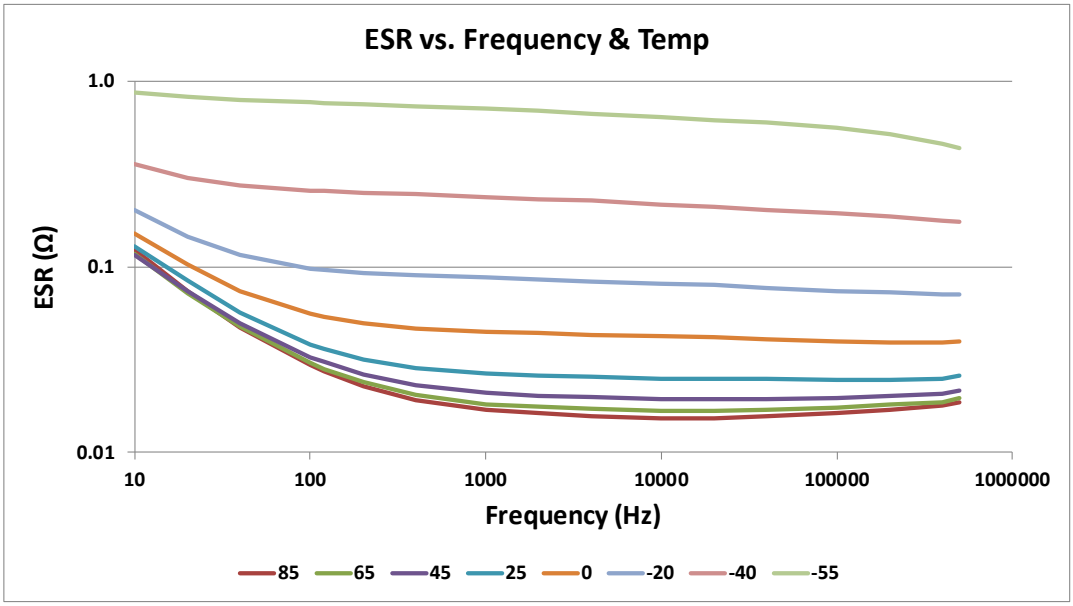

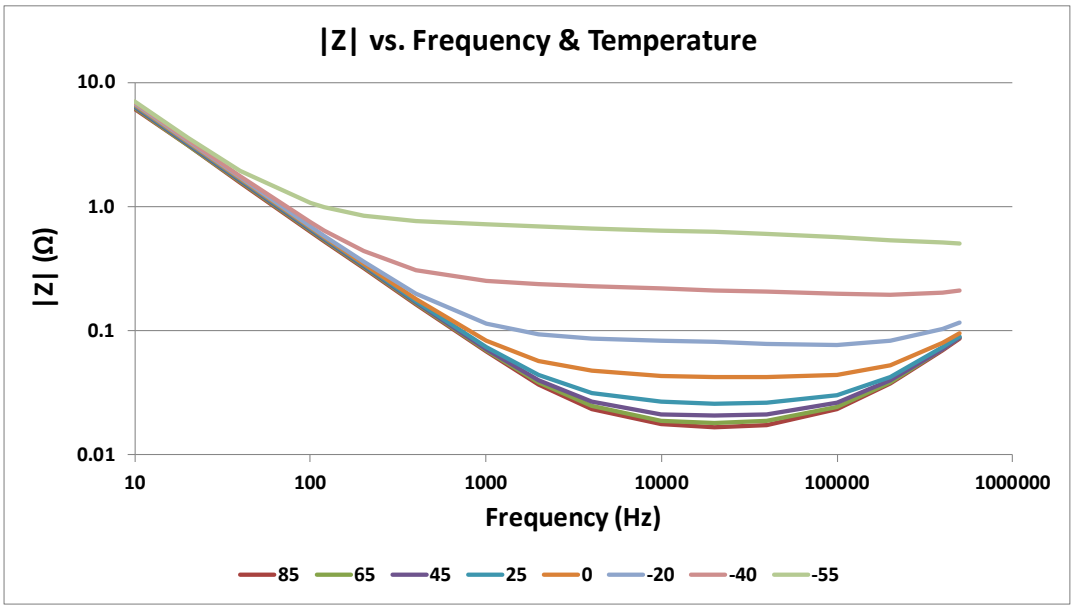

Notice and Disclaimer: All product drawings, descriptions, specifications, statements, information and data (collectively, the "Information") in this datasheet or other publication are subject to change. The customer is responsible for checking, confirming and verifying the extent to which the Information contained in this datasheet or other publication is applicable to an order at the time the order is placed. All Information given herein is believed to be accurate and reliable, but it is presented without any guarantee, warranty, representation or responsibility of any kind, expressed or implied. Statements of suitability for certain applications are based on the knowledge that the Cornell Dubilier company providing such statements ("Cornell Dubilier") has of operating conditions that such Cornell Dubilier company regards as typical for such applications, but are not intended to constitute any guarantee, warranty or representation regarding any such matter – and Cornell Dubilier specifically and expressly disclaims any guarantee, warranty or representation concerning the suitability for a specific customer application, use, storage, transportation, or operating environment. The Information is intended for use only by customers who have the requisite experience and capability to determine the correct products for their application. Any technical advice inferred from this Information or otherwise provided by Cornell Dubilier with reference to the use of any Cornell Dubilier products is given gratis (unless otherwise specified by Cornell Dubilier), and Cornell Dubilier assumes no obligation or liability for the advice given or results obtained. Although Cornell Dubilier strives to apply the most stringent quality and safety standards regarding the design and manufacturing of its products, in light of the current state of the art, isolated component failures may still occur. Accordingly, customer applications which require a high degree of reliability or safety should employ suitable designs or other safeguards (such as installation of protective circuitry or redundancies or other appropriate protective measures) in order to ensure that the failure of an electrical component does not result in a risk of personal injury or property damage. Although all product-related warnings, cautions and notes must be observed, the customer should not assume that all safety measures are indicated in such warnings, cautions and notes, or that other safety measures may not be required.

Компания «ЭлектроПласт» предлагает заключение долгосрочных отношений при поставках импортных электронных компонентов на взаимовыгодных условиях!

Наши преимущества:

- Оперативные поставки широкого спектра электронных компонентов отечественного и импортного производства напрямую от производителей и с крупнейших мировых складов;
- Поставка более 17-ти миллионов наименований электронных компонентов;
- Поставка сложных, дефицитных, либо снятых с производства позиций;
- Оперативные сроки поставки под заказ (от 5 рабочих дней);
- Экспресс доставка в любую точку России;
- Техническая поддержка проекта, помощь в подборе аналогов, поставка прототипов;
- Система менеджмента качества сертифицирована по Международному стандарту ISO 9001;
- Лицензия ФСБ на осуществление работ с использованием сведений, составляющих государственную тайну;
- Поставка специализированных компонентов (Xilinx, Altera, Analog Devices, Intersil, Interpoint, Microsemi, Aeroflex, Peregrine, Syfer, Eurofarad, Texas Instrument, Miteq, Cobham, E2V, MA-COM, Hittite, Mini-Circuits,General Dynamics и др.);

Помимо этого, одним из направлений компании «ЭлектроПласт» является направление «Источники питания». Мы предлагаем Вам помощь Конструкторского отдела:

- Подбор оптимального решения, техническое обоснование при выборе компонента;
- Подбор аналогов;
- Консультации по применению компонента;
- Поставка образцов и прототипов;
- Техническая поддержка проекта;
- Защита от снятия компонента с производства.

Как с нами связаться

Телефон: 8 (812) 309 58 32 (многоканальный)
Факс: 8 (812) 320-02-42
Электронная почта: org@eplast1.ru
Адрес: 198099, г. Санкт-Петербург, ул. Калинина, дом 2, корпус 4, литера А.