MIC2026/2076

Dual-Channel Power Distribution Switch

General Description

The MIC2026 and MIC2076 are high-side MOSFET switches optimized for general-purpose power distribution requiring circuit protection.

The MIC2026/76 are internally current limited and have thermal shutdown that protects the device and load.

The MIC2076 offers “smart” thermal shutdown that reduces current consumption in fault modes. When a thermal shutdown fault occurs, the output is latched off until the faulty load is removed. Removing the load or toggling the enable input will reset the device output.

Both devices employ soft-start circuitry that minimizes inrush current in applications where highly capacitive loads are employed.

A fault status output flag is asserted during overcurrent and thermal shutdown conditions. Transient faults are internally filtered.

The MIC2026/76 are available in 8-pin DIP or 8-pin SOIC.

All support documentation can be found on Micrel’s web site at www.micrel.com.

Features

- 140mΩ maximum on-resistance per channel
- 2.7V to 5.5V operating range
- 500mA minimum continuous current per channel
- Shortcircuit protection with thermal shutdown
- Thermally isolated channels
- Fault status flag with 3ms filter eliminates false assertions
- Undervoltage lockout
- Reverse current flow blocking (no “body diode”)
- Circuit breaker mode (MIC2076)
- Logic-compatible inputs
- Soft-start circuit
- Low quiescent current
- Pin compatible with MIC2526
- UL File # E179633

Applications

- USB peripherals
- General purpose power switching
- ACPI power distribution
- Notebook PCs
- PDAs
- PC card hot swap

Typical Application

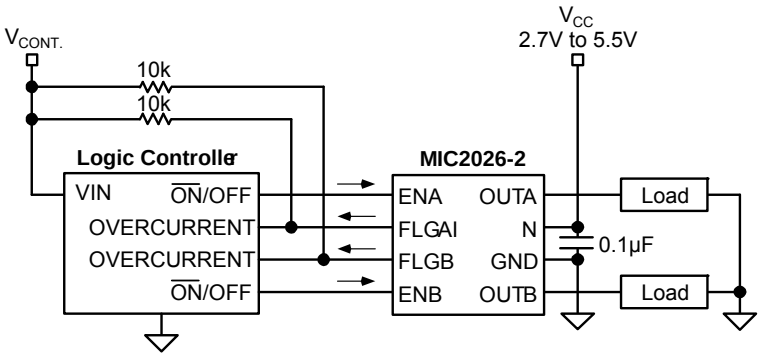

UL Recognized Component

Micrel Inc. • 2180 Fortune Drive • San Jose, CA 95131 • USA • tel +1 (408) 944-0800 • fax + 1 (408) 474-1000 • http://www.micrel.com

Ordering Information

Part Number		Enable	Temperature Range	Package
Standard	Pb-Free			
MIC2026-1BM	MIC2026-1YM[1]	Active High	–40°C to +85°C	8-Pin SOIC
MIC2026-2BM	MIC2026-2YM[1]	Active Low		8- Pin SOIC
MIC2026-1BN	—	Active High		8- Pin DIP
MIC2026-2BN	—	Active Low		8- Pin DIP
MIC2076-1BM	MIC2076-1YM[1]	Active High		8- Pin SOIC
MIC2076-2BM	MIC2076-2YM[1]	Active Low		8- Pin SOIC
MIC2076-1BN	—	Active High		8-Pin DIP
MIC2076-2BN	—	Active Low		8-Pin DIP

Note:

1. RoHS compliant and Halogen free.

Pin Configuration

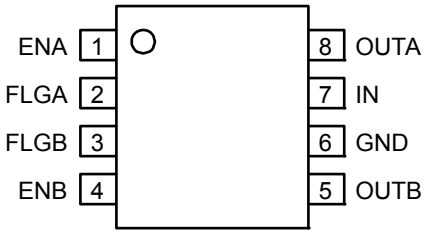

8-Pin SOIC (M)
8-Pin DIP (N)

Pin Description

Pin Number	Pin Name	Pin Function
1	ENA	Switch A Enable (Input): Logic-compatible, enable input. Active high (-1) or active low (-2).
2	FLGA	Fault Flag A (Output): Active-low, open-drain output. Indicates overcurrent or thermal shutdown conditions. Overcurrent conditions must last longer than t_D in order to assert FLGA.
3	FLGB	Fault Flag B (Output): Active-low, open-drain output. Low indicates overcurrent or thermal shutdown conditions. Overcurrent conditions must last longer than t_D in order to assert FLGB.
4	ENB	Switch B Enable (Input): Logic-compatible enable input. Active-high (-1) or active-low (-2).
5	OUTB	Switch B (Output)
6	GND	Ground
7	IN	Input: Switch and logic supply input.
8	OUTA	Switch A (Output)

Absolute Maximum Ratings[1]

Supply Voltage (V_{IN}) ..... –0.3V to +6V
Fault Flag Voltage (V_{FLG}) ..... +6V
Fault Flag Current (I_{FLG}) 25mA
Output Voltage (V_{OUT}) ..... +6V
Output Current (I_{OUT}) ..... Internally Limited
Enable Input (I_{EN}) ..... –0.3V to V_{IN} + 3V
Storage Temperature (T_S) ..... –65°C to +150 °C
ESD Rating[3]
HBM 1kV
MM 200V

Operating Ratings[2]

Supply Voltage (V_{IN}) ..... +2.7V to +5.5V
Ambient Temperature (T_A) ..... –40°C to +85°C
Junction Temperature Range (T_J) ..... Internally Limited
Thermal Resistance
SOIC (θ_{JA}) ..... 160°C/W
PDIP (θ_{JA}) ..... 105°C/W

Electrical Characteristics[4]

V_{IN} = +5V; T_A = 25°C, **bold** values indicate –40°C ≤ T_A ≤ +85°C; unless noted

Symbol	Parameter	Condition	Min	Typ	Max	Units
I_{DD}	Supply Current	MIC20x6-1, V_{ENA} = V_{ENB} ≤ 0.8V (switch off), OUT = open		0.75	5	µA
		MIC20x6-2, V_{ENA} = V_{ENB} ≥ 2.4V (switch off), OUT = open		9.5	**20**	µA
		MIC20x6-1, V_{ENA} = V_{ENB} ≥ 2.4V (switch on), OUT = open		100	160	µA
		MIC20x6-2, V_{ENA} = V_{ENB} ≤ 0.8V (switch on), OUT = open		100	160	µA
V_{EN}	Enable Input Threshold	low-to-high transition		1.7	**2.4**	V
		high-to-low transition	**0.8**	1.45		V
	Enable Input Hysteresis			250		mV
I_{EN}	Enable Input Current	V_{EN} = 0V to 5.5V	**-1**	0.01	**1**	µA
	Enable Input Capacitance			1		pF
$R_{DS(ON)}$	Switch Resistance	V_{IN} = 5V, I_{OUT} = 500mA		90	**140**	mΩ
		V_{IN} = 3.3V, I_{OUT} = 500mA		100	**170**	mΩ
	Output Leakage Current	MIC20x6-1, V_{ENx} ≤ 0.8V; MIC20x6-1, V_{ENx} ≥ 2.4V, (output off)			**10**	µA
	OFF Current in Latched Thermal Shutdown	MIC2076 (during thermal shutdown state)		50		µA
t_{ON}	Output Turn-On Delay	R_L = 10Ω, C_L = 1µF, see “Timing Diagrams”		1.3	**5**	ms
t_R	Output Turn-On Rise Time	R_L = 10Ω, C_L = 1µF, see “Timing Diagrams”	**0.5**	1.15	**4.9**	ms
		R_L = 10Ω, C_L = 1µF, see “Timing Diagrams”		1.75		ms
t_{OFF}	Output Turn-Off Delay	R_L = 10Ω, C_L = 1µF, see “Timing Diagrams”		35	**100**	µs
t_F	Output Turn-Off Fall Time	R_L = 10Ω, C_L = 1µF, see “Timing Diagrams”		32	**100**	µs
I_{LIMIT}	Short-Circuit Output Current	V_{OUT} = 0V, enabled into short-circuit	0.5	0.9	1.25	A
	Current-Limit Threshold	ramped load applied to output	0.65	1.0	1.25	A
	Short-Circuit Response Time	V_{OUT} = 0V to I_{OUT} = I_{LIMIT} (short applied to output)		20		µs

Symbol	Parameter	Condition	Min	Typ	Max	Units
t_D	Overcurrent Flag Response Delay	V_{IN} = 5V, apply V_{OUT} = 0V until FLG low	**1.5**	3	**7**	ms
		V_{IN} = 3.3V, apply V_{OUT} = 0V until FLG low		3		ms
	Undervoltage Lockout Threshold	V_{IN} rising	**2.2**	2.4	**2.7**	V
		V_{IN} falling	**2.0**	2.15	**2.5**	V
	Error Flag Output Resistance	I_L = 10mA, V_{IN} = 5V		10	**25**	Ω
		I_L = 10mA, V_{IN} = 3.3V		15	**40**	Ω
	Error Flag Off Current	V_{FLAG} = 5V			10	µA
	Overtemperature Threshold[5]	T_J increasing, each switch T_J decreasing, each switch		140 120		°C °C
		T_J increasing, both switches T_J decreasing, both switches		160 150		°C °C

Notes:

1. Exceeding the absolute maximum rating may damage the device.
2. The device is not guaranteed to function outside its operating rating.
3. Devices are ESD sensitive. Handling precautions recommended.
4. Specification for packaged product only.
5. If there is a fault on one channel, that channel will shut down when the die reaches approximately 140°C. If the die reaches approximately 160°C, both channels will shut down, even if neither channel is in current limit.

Test Circuit

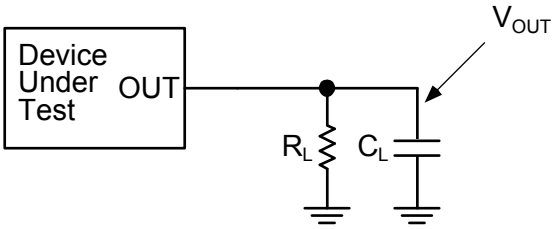

Timing Diagrams

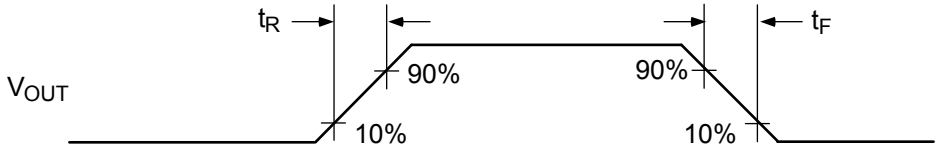

Output Rise and Fall Times

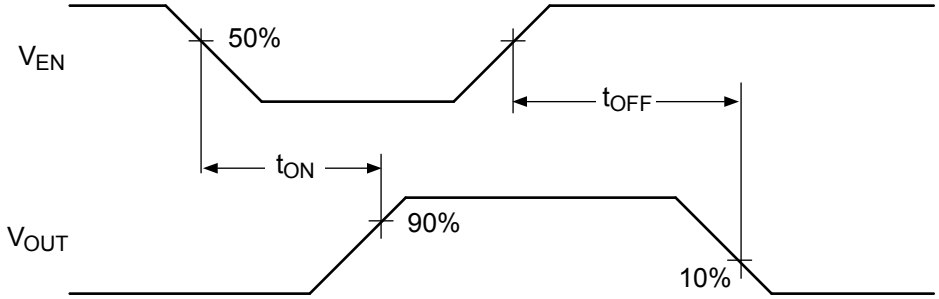

Active-Low Switch Delay Times (MIC20x6-2)

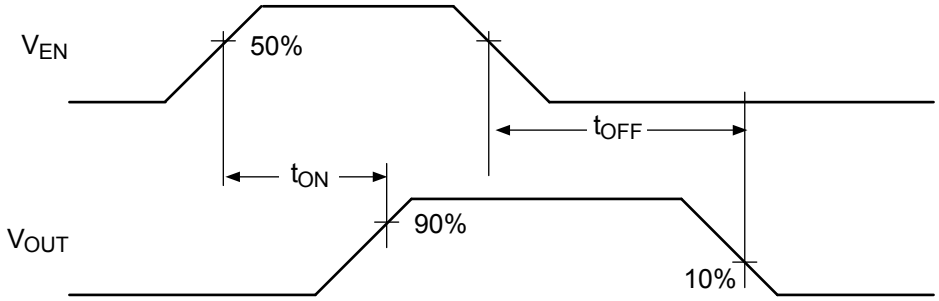

Active-High Switch Delay Time (MIC20x6-1)

Typical Characteristics

Supply On-Current vs. Temperature

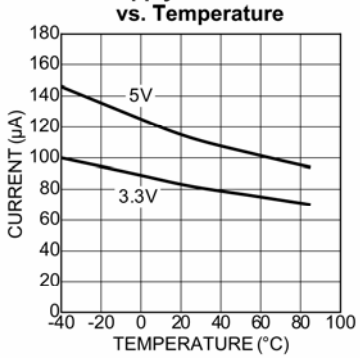

On-Resistance vs. Temperature

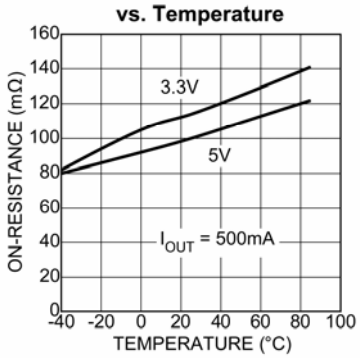

Turn-On Rise Time vs. Temperature

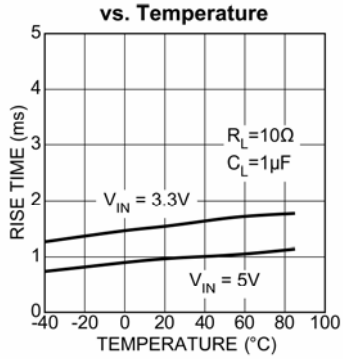

Supply On-Current vs. Input Voltage

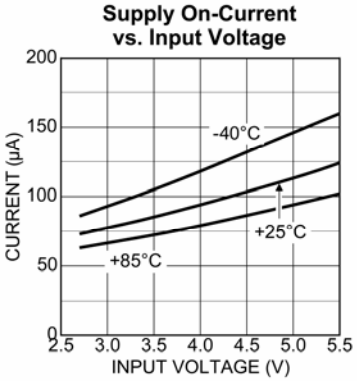

On-Resistance vs. Input Voltage

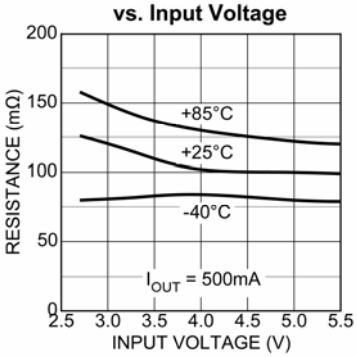

Turn-On Rise Time vs. Input Voltage

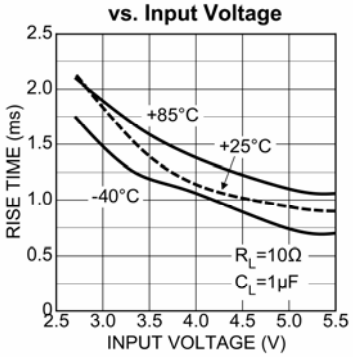

Short-Circuit Current-Limit vs. Temperature

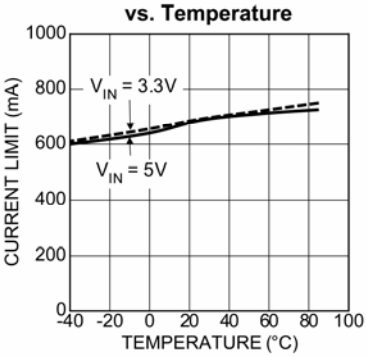

Current-Limit Threshold vs. Temperature

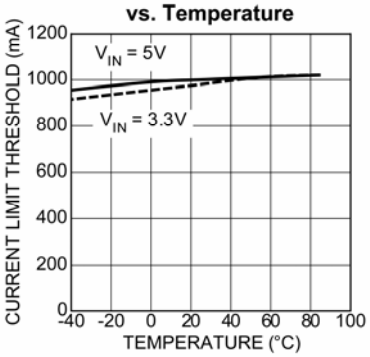

Fall Time vs. Temperature

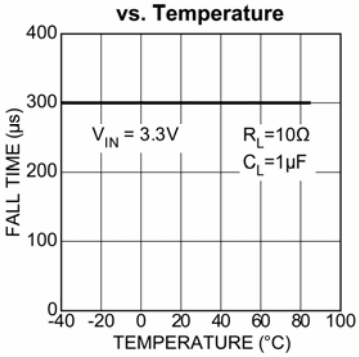

Short-CircuitC urrent-Limit vs. Input Voltage

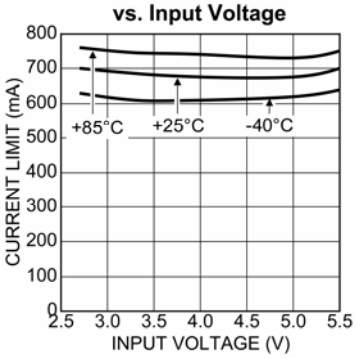

Current-Limit Threshold vs. Input Voltage

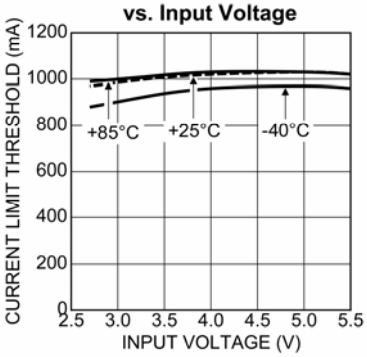

Fall Time vs. Input Voltage

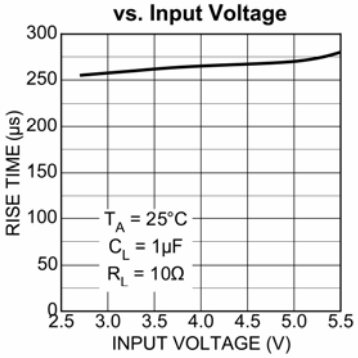

Typical Characteristics (continue)

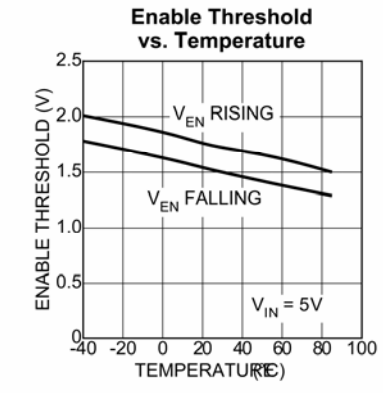

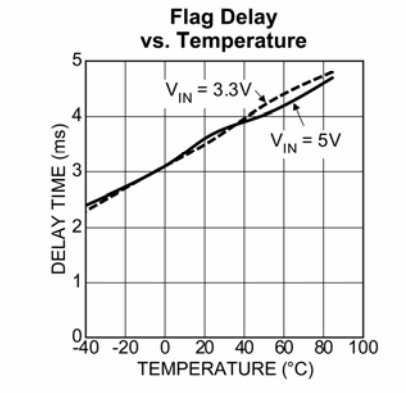

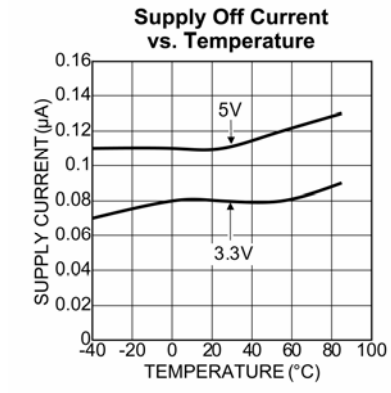

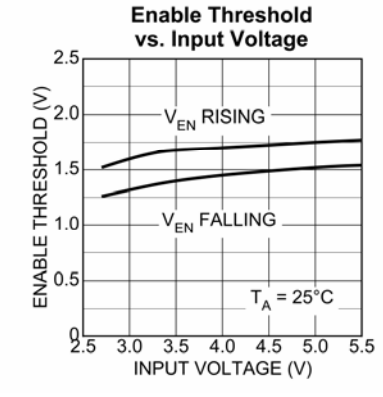

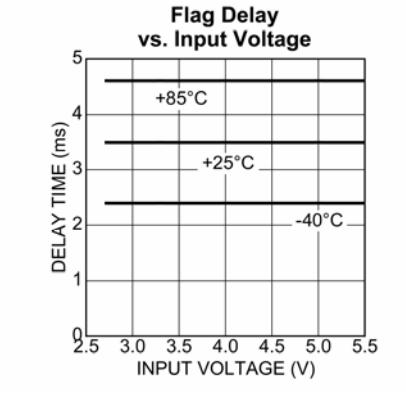

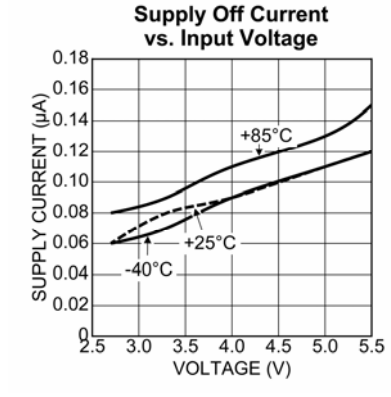

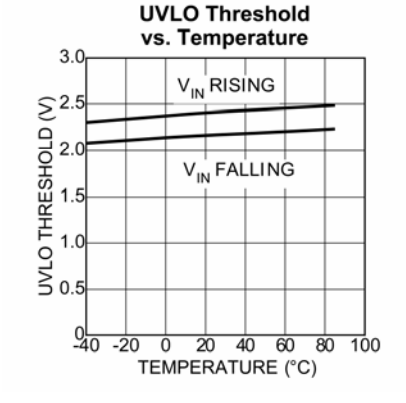

Functional Characteristics

UVLO—V_{IN} Rising (MIC2026-1)

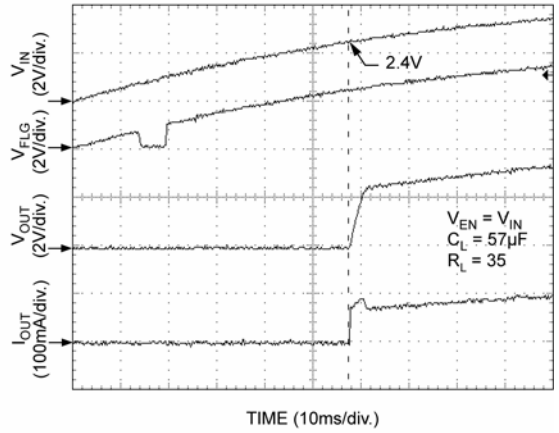

UVLO—V_{IN} Falling (MIC2026-1)

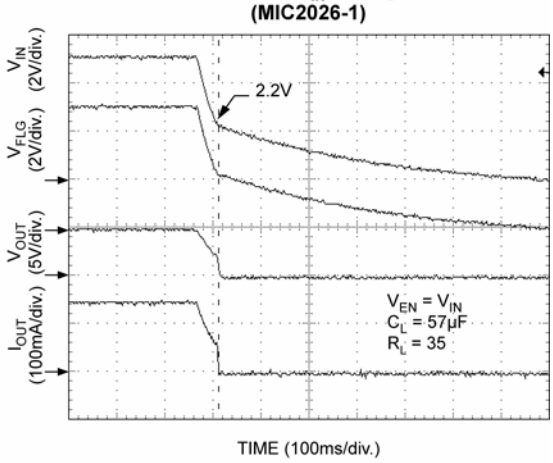

Turn-On/Turn-Off (MIC2026-1)

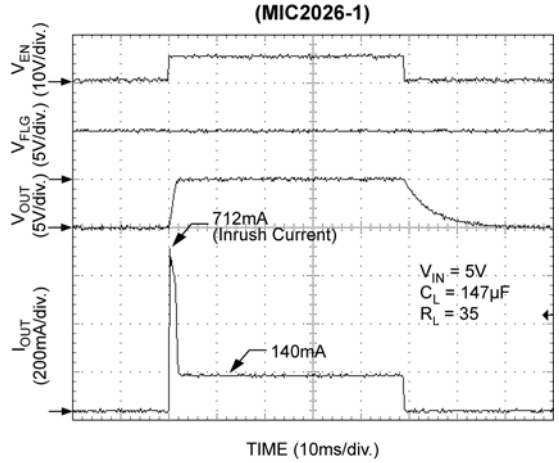

Turn-On (MIC2026-1)

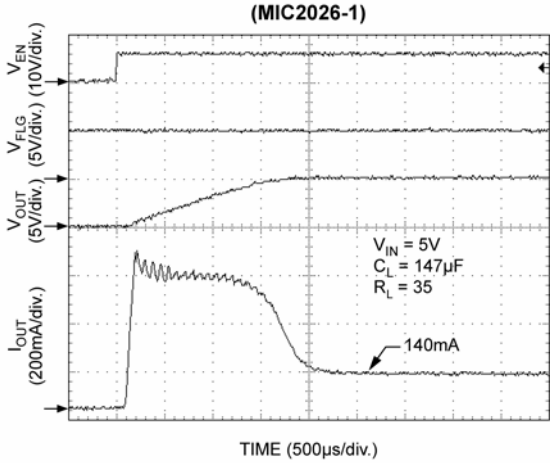

Turn-Off (MIC2026-1)

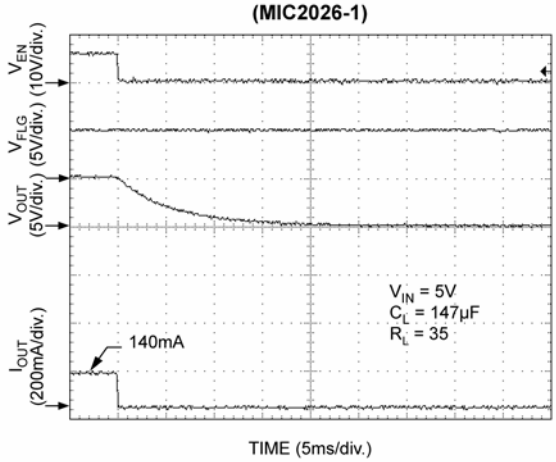

Enabled Into Short (MIC2026-1)

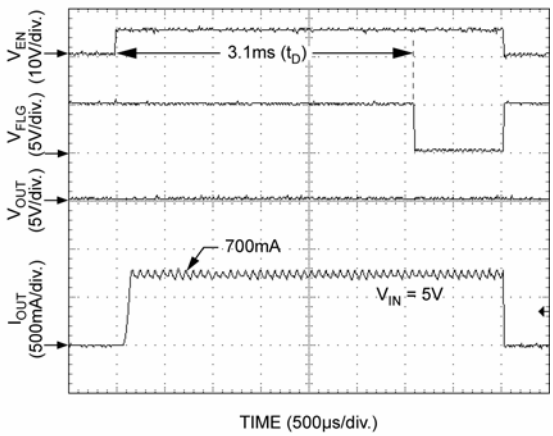

Functional Characteristics (continue)

Inrush Current Response (MIC2026-1)

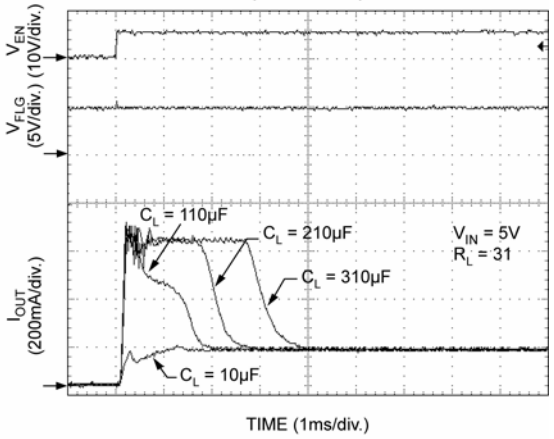

Current-Limit Response (Ramped Load–MIC2026-1)

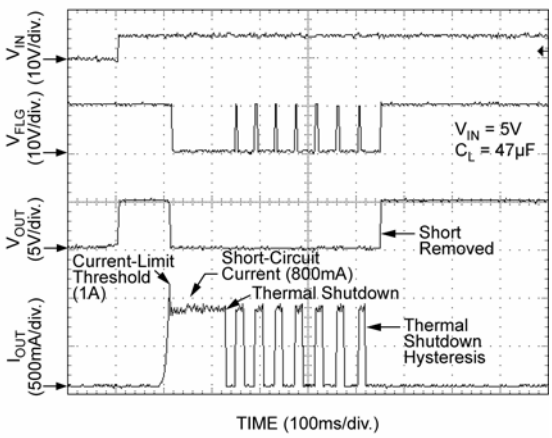

Current-Limit Response (Stepped Short–MIC2026-1)

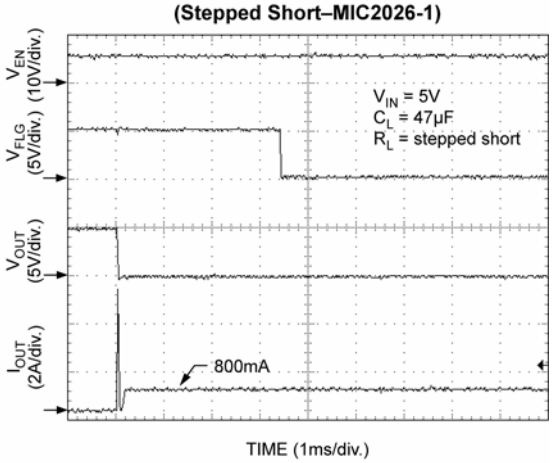

Current-Limit Response (MIC2026-1)

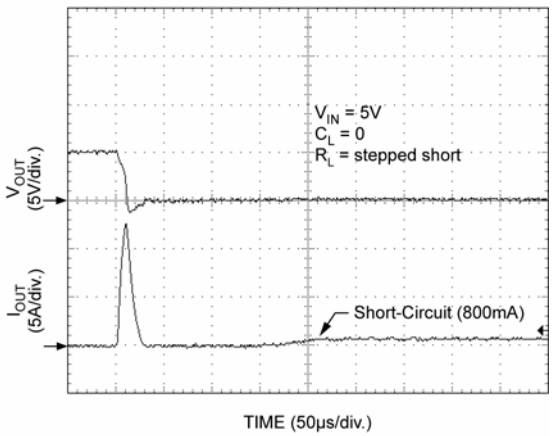

Independent Thermal Shutdown (MIC2026-1)

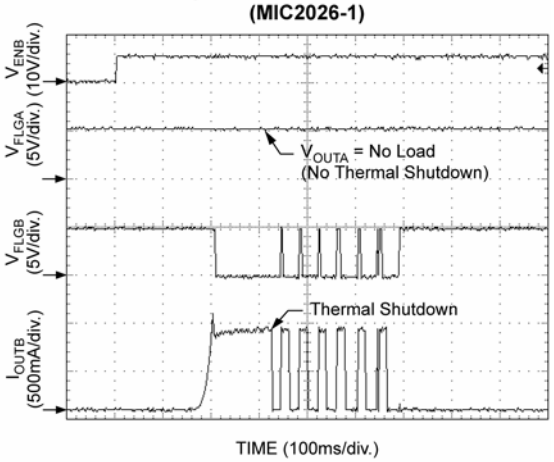

Independent Thermal Shutdown (MIC2026-1)

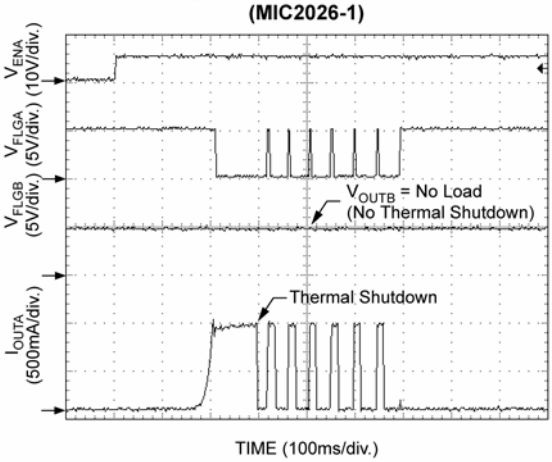

Functional Characteristics (continue)

Thermal Shutdown (MIC2076-2–Output Latched Off)

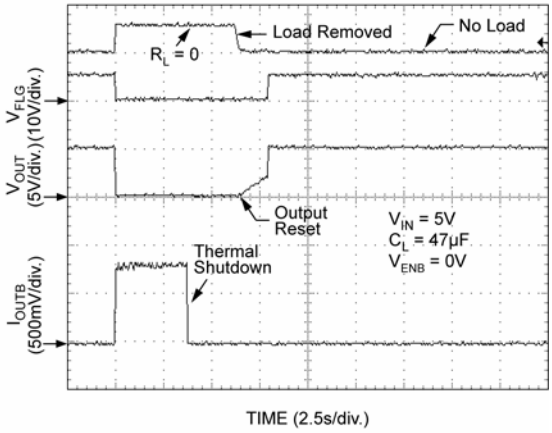

Thermal Shutdown (Output Reset by Toggling Enable–MIC2076-2)

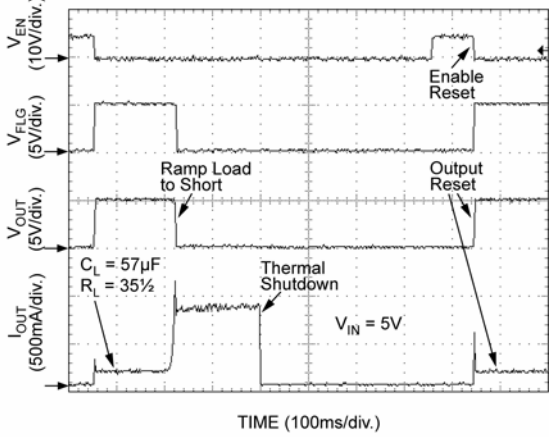

Thermal Shutdown (Output Reset by Removing Load–MIC2076-2)

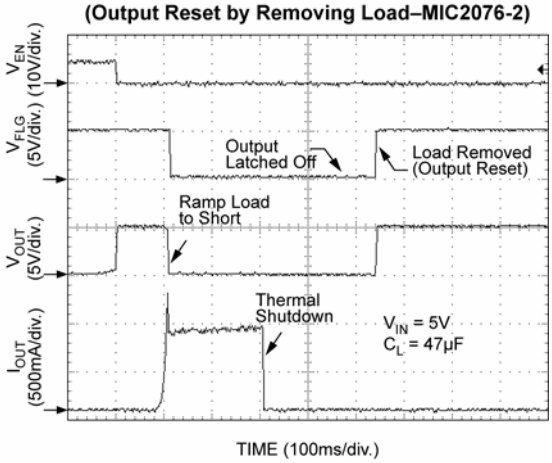

Independent Thermal Shutdown (MIC2076-2)

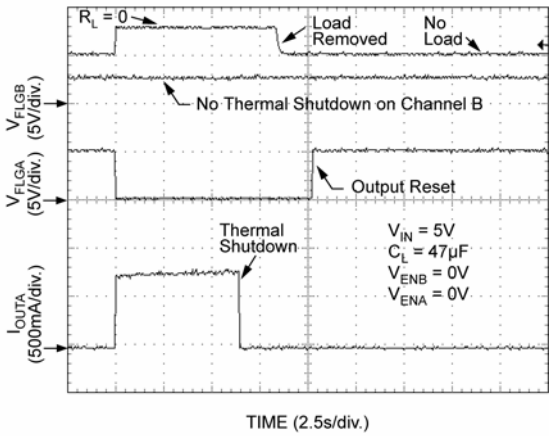

Independent Thermal Shutdown (MIC2076-2)

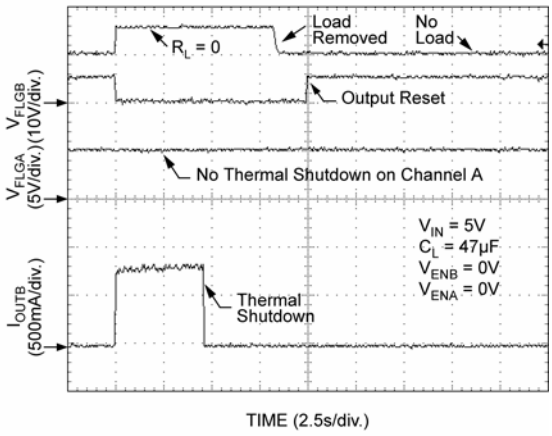

Block Diagram

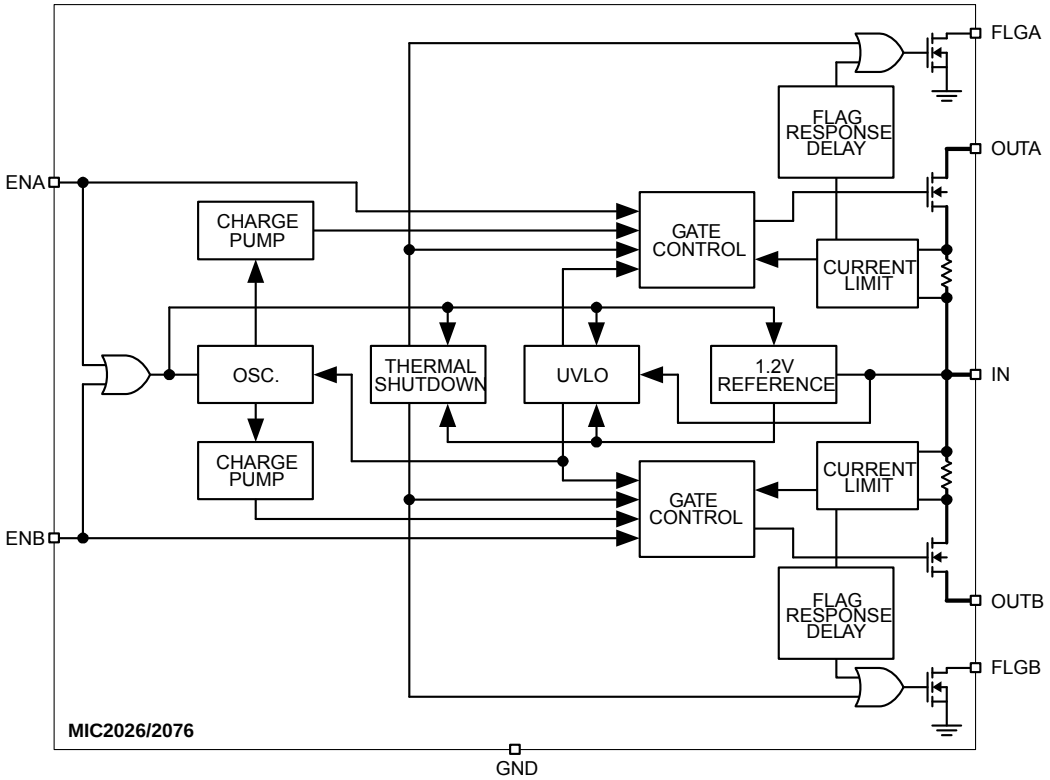

MIC2026/2076 Block Diagram

Functional Description

Input and Output

IN is the power supply connection to the logic circuitry and the drain of the output MOSFET. OUT is the source of the output MOSFET. In a typical circuit, current flows from IN to OUT toward the load. If V_{OUT} is greater than V_{IN}, current will flow from OUT to IN, since the switch is bidirectional when enabled. The output MOSFET and driver circuitry are also designed to allow the MOSFET source to be externally forced to a higher voltage than the drain ($V_{OUT} > V_{IN}$) when the switch is disabled. In this situation, the MIC2026/76 prevents undesirable current flow from OUT to IN.

Thermal Shutdown

Thermal shutdown is employed to protect the device from damage should the die temperature exceed safe margins due mainly to short circuit faults. Each channel employs its own thermal sensor. Thermal shutdown shuts off the output MOSFET and asserts the FLG output if the die temperature reaches 140°C and the overheated channel is in current limit. The other channel is not affected. If however, the die temperature exceeds 160°C, both channels will be shut off. Upon determining a thermal shutdown condition, the MIC2076 will latch the output off. In this case, a pull-up current source is activated. This allows the output latch to automatically reset when the load (such as a USB device) is removed. The output can also be reset by toggling EN. Refer to Figure 1 for timing details.

The MIC2026 will automatically reset its output when the die temperature cools down to 120°C. The MIC2026 output and FLG signal will continue to cycle on and off until the device is disabled or the fault is removed. Figure 2 depicts typical timing.

Depending on PCB layout, package, ambient temperature, etc., it may take several hundred milliseconds from the incidence of the fault to the output MOSFET being shut off. This time will be shortest in the case of a dead short on the output.

Power Dissipation

The device's junction temperature depends on several factors such as the load, PCB layout, ambient temperature, and package type. Equations that can be used to calculate power dissipation of each channel and junction temperature are found below:

$$P_D = R_{DS(on)} \times I_{OUT}^2$$

Total power dissipation of the device will be the summation of P_D for both channels. To relate this to junction temperature, the following equation can be used:

$T_J = P_D \times \theta_{JA} + T_A$

where:

T_J = junction temperature

T_A = ambient temperature

θ_{JA} = is the thermal resistance of the package

Current Sensing and Limiting

The current-limit threshold is preset internally. The preset level prevents damage to the device and external load but still allows a minimum current of 500mA to be delivered to the load.

The current-limit circuit senses a portion of the output MOSFET switch current. The current-sense resistor shown in the block diagram is virtual and has no voltage drop. The reaction to an overcurrent condition varies with three scenarios:

Switch Enabled into Short-Circuit

If a switch is enabled into a heavy load or short-circuit, the switch immediately enters into a constant-current mode, reducing the output voltage. The FLG signal is asserted indicating an overcurrent condition.

Short-Circuit Applied to Enabled Output

When a heavy load or short-circuit is applied to an enabled switch, a large transient current may flow until the current-limit circuitry responds. Once this occurs, the device limits current to less than the short-circuit current limit specification.

Current-Limit Response—Ramped Load

The MIC2026/76 current-limit profile exhibits a small foldback effect of about 200mA. Once this current-limit threshold is exceeded the device switches into a constant current mode. It is important to note that the device will supply current up to the current-limit threshold.

Fault Flag

The FLG signal is an N-channel open-drain MOSFET output. FLG is asserted (active-low) when either an overcurrent or thermal shutdown condition occurs. In the case of an overcurrent condition, FLG will be asserted only after the flag response delay time, t_D, has elapsed. This ensures that FLG is asserted only upon valid overcurrent conditions and that erroneous error reporting is eliminated. For example, false overcurrent conditions can occur during hot plug events when a highly capacitive load is connected and causes a high transient inrush current that exceeds the current-limit threshold for up to 1ms. The FLG response delay time t_D is typically 3ms.

Undervoltage Lockout

Undervoltage lockout (UVLO) prevents the output MOSFET from turning on until V_{IN} exceeds approximately 2.5V. Undervoltage detection functions only when the switch is enabled.

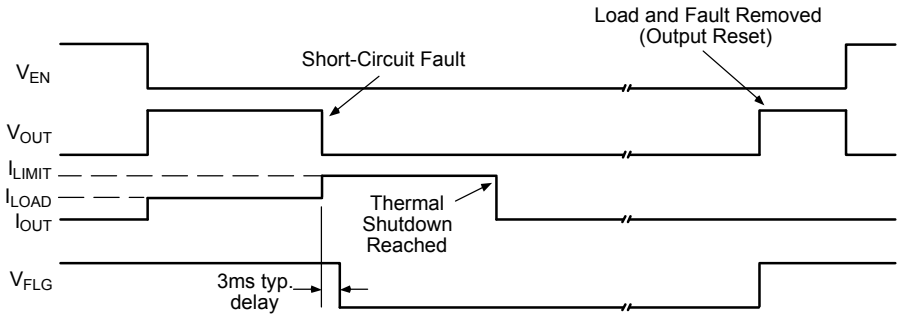

Figure 1. MIC2076-2 Fault Timing: Output Reset by Removing Load

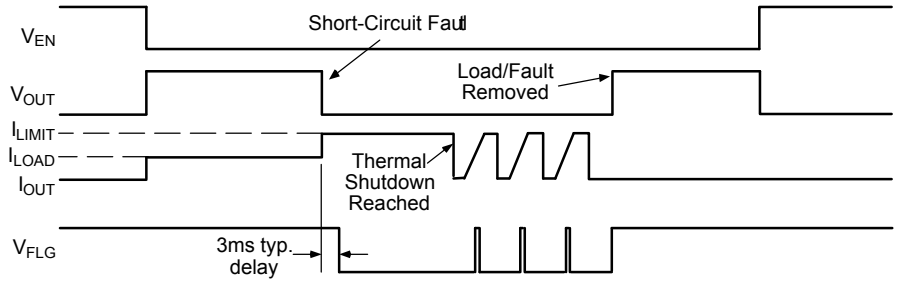

Figure 2. MIC2026-2 Fault Timing

Application Information

Supply Filtering

A 0.1µF to 1µF bypass capacitor positioned close to V_{IN} and GND of the device is strongly recommended to control supply transients. Without a bypass capacitor, an output short may cause sufficient ringing on the input (from supply lead inductance) to damage internal control circuitry.

Printed Circuit Board Hot-Plug

The MIC2026/76 are ideal inrush current-limiters for hot plug applications. Due to their integrated charge pumps, the MIC2026/76 present a high impedance when off and slowly become a low impedance as their integrated charge pumps turn on. This “soft-start” feature effectively isolates power supplies from highly capacitive loads by reducing inrush current. Figure 3 shows how the MIC2076 may be used in a card hot-plug application.

In cases of extremely large capacitive loads (>400µF), the length of the transient due to inrush current may exceed the delay provided by the integrated filter. Since this inrush current exceeds the current-limit delay specification, FLG will be asserted during this time. To prevent the logic controller from responding to FLG being asserted, an external RC filter, as shown in Figure 4, can be used to filter out transient FLG assertion. The value of the RC time constant should be selected to match the length of the transient, less $t_{D(min)}$ of the MIC2026/76.

Universal Serial Bus (USB) Power Distribution

The MIC2026/76 are ideally suited for USB (Universal Serial Bus) power distribution applications. The USB specification defines power distribution for USB host systems such as PCs and USB hubs. Hubs can either be self-powered or bus-powered (that is, powered from the bus). Figure 5 shows a typical USB Host application that may be suited for mobile PC applications employing USB. The requirement for USB host systems is that the port must supply a minimum of 500mA at an output voltage of 5V ±5%. In addition, the output power delivered must be limited to below 25VA. Upon an overcurrent condition, the host must also be notified. To support hot-plug events, the hub must have a minimum of 120µF of bulk capacitance, preferably low ESR electrolytic or tantulum. Please refer to Application Note 17 for more details on designing compliant USB hub and host systems.

For bus-powered hubs, USB requires that each downstream port be switched on or off under control by the host. Up to four downstream ports each capable of supplying 100mA at 4.4V minimum are allowed. In addition, to reduce voltage droop on the upstream V_{BUS}, soft-start is necessary. Although the hub can consume up to 500mA from the upstream bus, the hub must consume only 100mA max at start-up, until it enumerates with the host prior to requesting more power. The same requirements apply for bus-powered peripherals that have no downstream ports. Figure 6 shows a bus-powered hub.

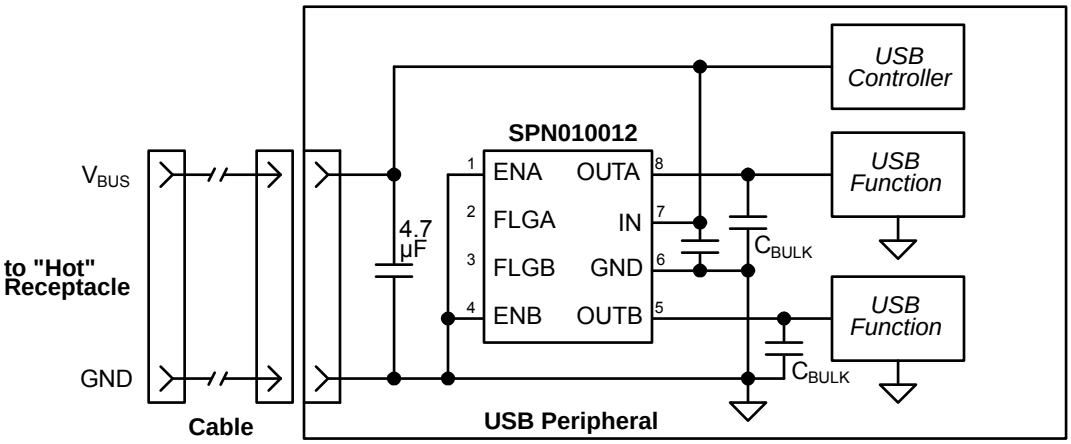

Figure 3. Hot-Plug Application

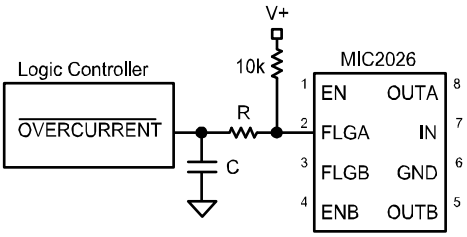

Figure 4. Transient Filter

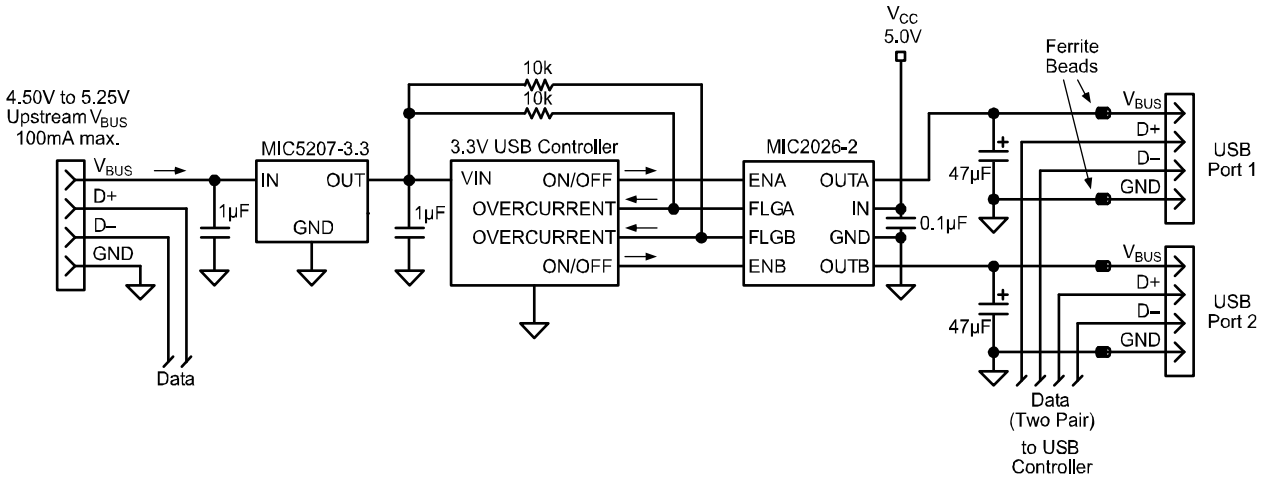

Figure 5. USB Two-Port Host Application

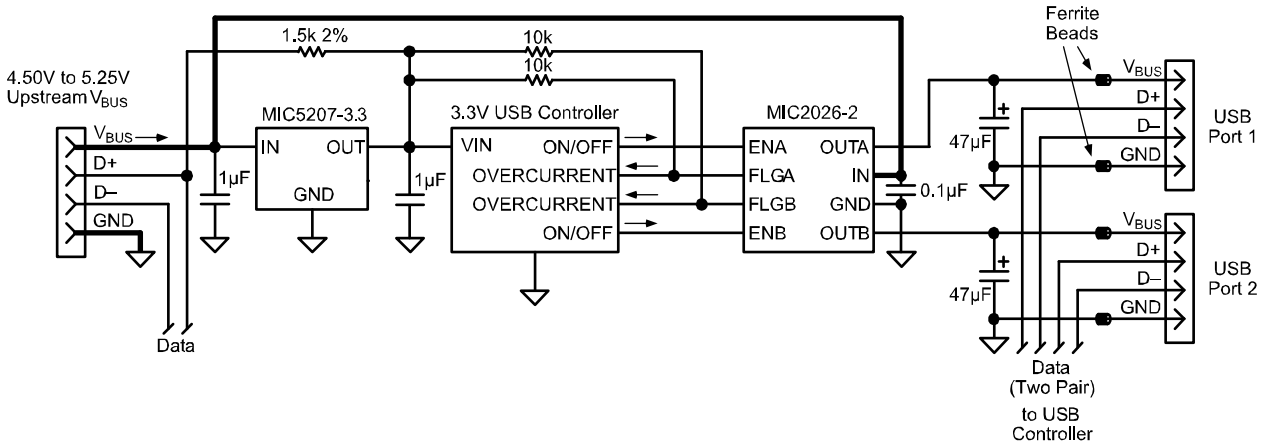

Figure 6. USB Two-Port Bus-Powered Hub

Package Information

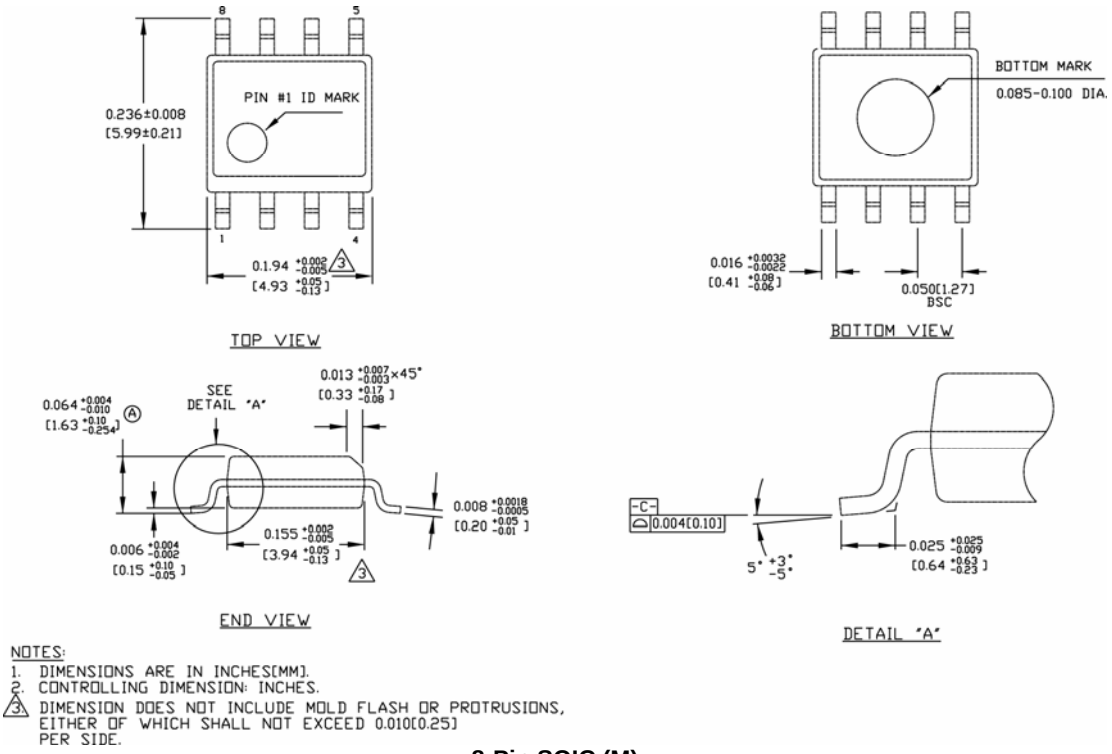

8-Pin SOIC (M)

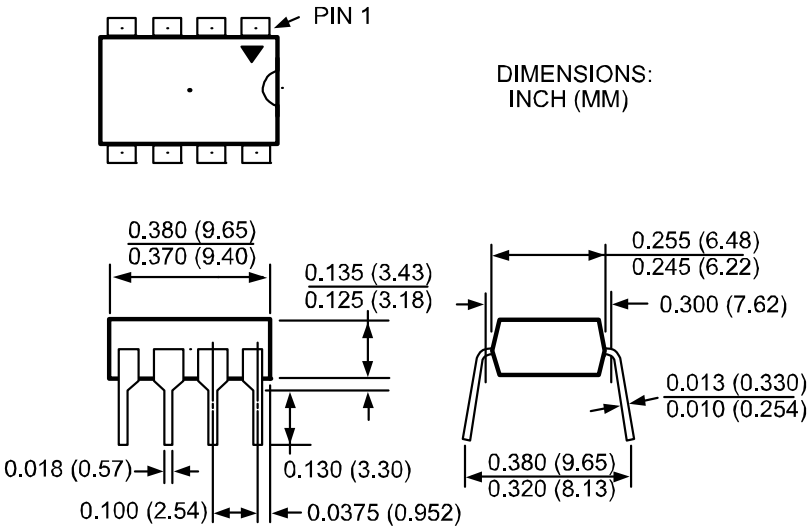

8-Pin DIP (N)

MICREL, INC. 2180 FORTUNE DRIVE SAN JOSE, CA 95131 USA
TEL +1 (408) 944-0800 FAX +1 (408) 474-1000 WEB http://www.micrel.com

The information furnished by Micrel in this data sheet is believed to be accurate and reliable. However, no responsibility is assumed by Micrel for its use. Micrel reserves the right to change circuitry and specifications at any time without notification to the customer.

Micrel Products are not designed or authorized for use as components in life support appliances, devices or systems where malfunction of a product can reasonably be expected to result in personal injury. Life support devices or systems are devices or systems that (a) are intended for surgical implant into the body or (b) support or sustain life, and whose failure to perform can be reasonably expected to result in a significant injury to the user. A Purchaser's use or sale of Micrel Products for use in life support appliances, devices or systems is a Purchaser's own risk and Purchaser agrees to fully indemnify Micrel for any damages resulting from such use or sale.

© 2006 Micrel, Incorporated.

Компания «ЭлектроПласт» предлагает заключение долгосрочных отношений при поставках импортных электронных компонентов на взаимовыгодных условиях!

Наши преимущества:

- Оперативные поставки широкого спектра электронных компонентов отечественного и импортного производства напрямую от производителей и с крупнейших мировых складов;
- Поставка более 17-ти миллионов наименований электронных компонентов;
- Поставка сложных, дефицитных, либо снятых с производства позиций;
- Оперативные сроки поставки под заказ (от 5 рабочих дней);
- Экспресс доставка в любую точку России;
- Техническая поддержка проекта, помощь в подборе аналогов, поставка прототипов;
- Система менеджмента качества сертифицирована по Международному стандарту ISO 9001;
- Лицензия ФСБ на осуществление работ с использованием сведений, составляющих государственную тайну;
- Поставка специализированных компонентов (Xilinx, Altera, Analog Devices, Intersil, Interpoint, Microsemi, Aeroflex, Peregrine, Syfer, Eurofarad, Texas Instrument, Miteq, Cobham, E2V, MA-COM, Hittite, Mini-Circuits,General Dynamics и др.);

Помимо этого, одним из направлений компании «ЭлектроПласт» является направление «Источники питания». Мы предлагаем Вам помощь Конструкторского отдела:

- Подбор оптимального решения, техническое обоснование при выборе компонента;
- Подбор аналогов;
- Консультации по применению компонента;
- Поставка образцов и прототипов;
- Техническая поддержка проекта;
- Защита от снятия компонента с производства.

Как с нами связаться

Телефон: 8 (812) 309 58 32 (многоканальный)
Факс: 8 (812) 320-02-42
Электронная почта: org@eplast1.ru
Адрес: 198099, г. Санкт-Петербург, ул. Калинина, дом 2, корпус 4, литера А.