COSEL AC-DC Power Supplies PCB Mount type

VAF5

Ordering information

VAF 5 05

① ② ③

①Series name
②Output wattage
③Output voltage

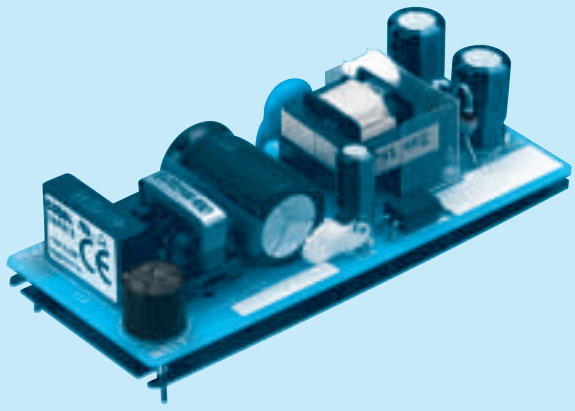

VAF

MODEL		VAF503	VAF505	VAF512	VAF515	VAF524
MAX OUTPUT WATTAGE[W]		3.3	5.0	5.4	5.25	5.28
DC OUTPUT	VOLTAGE[V]	3.3	5	12	15	24
	CURRENT[A]	1.0 (Peak 1.2)	1.0 (Peak 1.2)	0.45 (Peak 0.54)	0.35 (Peak 0.42)	0.22 (Peak 0.27)

SPECIFICATIONS

	MODEL		VAF503	VAF505	VAF512	VAF515	VAF524
INPUT	VOLTAGE[V]		AC85 - 264 1φ or DC110 - 370				
	CURRENT[A]	ACIN 100V	0.15typ (Io=100%)				
		ACIN 200V	0.10typ (Io=100%)				
	FREQUENCY[Hz]		47 - 440 or DC				
	INRUSH CURRENT[A]	ACIN 100V	15typ (Io=100%)				
		ACIN 200V	30typ (Io=100%)				
	LEAKAGE CURRENT[mA]		0.5max (60Hz, According to IEC60950 and DEN-AN)				
	EFFICIENCY[%]		68typ	77typ	78typ	78typ	81typ
OUTPUT	VOLTAGE[V]		3.3	5	12	15	24
	CURRENT[A]	*1	1.0 (Peak 1.2)	1.0 (Peak 1.2)	0.45 (Peak 0.54)	0.35 (Peak 0.42)	0.22 (Peak 0.27)
	LINE REGULATION[mV]		20max	20max	48max	60max	96max
	LOAD REGULATION[mV]		40max	40max	100max	120max	150max
	RIPPLE[mVp-p]	0 to +55℃ *2	80max	80max	120max	120max	150max
		-10 - 0℃ *2	140max	140max	160max	160max	200max
		Io=100 - 120% *2	180max	180max	200max	200max	240max
	RIPPLE NOISE[mVp-p]	0 to +55℃ *2	120max	120max	150max	150max	200max
		-10 - 0℃ *2	160max	160max	180max	180max	230max
		Io=100 - 120% *2	200max	200max	220max	220max	260max
	TEMPERATURE COEFFICIENT[mV]	-10 to +55℃	100max	50max	120max	150max	300max
	DRIFT[mV]	*3	20max	20max	48max	60max	96max
	OUTPUT VOLTAGE SETTING[V]		3.19 - 3.47	4.90 - 5.30	11.40 - 12.60	14.25 - 15.75	23.0 - 25.0
	OUTPUT VOLTAGE ADJUSTMENT RANGE[V]		Fixed				
	START-UP TIME[ms]		700max (ACIN 85V, Io=100%)				
	HOLD-UP TIME[ms]		10typ (ACIN 85V, Io=100%), 20typ (ACIN 100V, Io=100%)				
PROTECTION CIRCUIT	OVERCURRENT PROTECTION		Works over 125% of rating and recovers automatically				
	OVERVOLTAGE PROTECTION		Works over 115% of rating (By zener diode clamping)				
ISOLATION	INPUT-OUTPUT		AC3,000V 1minute, Cutoff current = 10mA, DC500V 50MΩ min (At Room Temperature)				
	INPUT-FG		AC2,000V 1minute, Cutoff current = 10mA, DC500V 50MΩ min (At Room Temperature)				
	OUTPUT-FG		AC500V 1minute, Cutoff current = 100mA, DC500V 50MΩ min (At Room Temperature)				
ENVIRONMENT	OPERATING TEMP.,HUMID.AND ALTITUDE		-10 to +71℃, 20 - 90%RH (Non condensing) (Refer to DERATING CURVE), 3,000m (10,000feet) max				
	STORAGE TEMP.,HUMID.AND ALTITUDE		-20 to +75℃, 20 - 90%RH (Non condensing), 9,000m (30,000feet) max				
	VIBRATION		19.6m/s² 10 - 55Hz, 3minutes period, 60minutes each along X, Y and Z axis (Non operating)				
	IMPACT		196.1m/s² 11ms, once each X, Y and Z axis (Non operating)				
SAFETY AND NOISE REGULATIONS	AGENCY APPROVALS		UL60950-1, C-UL, EN60950-1, EN50178 Complies with DEN-AN and IEC60950-1				
	CONDUCTED NOISE		Complies with FCC-B, VCCI-B, CISPR22-B, EN55022-B				
OTHERS	CASE SIZE/WEIGHT		32×20×72.5mm [1.26×0.79×2.85 inches] (W×H×D) / 30g max				
	COOLING METHOD		Convection				

*1 Peak load for 10sec. or less in acceptable if the total wattage is less than the rated wattage.
*2 This is the value that measured on measuring board with capasitor of 22μF. Measuared by 20MHz oscilloscope or Ripple-Noise meter (Equivalent to KEISOKU-GIKEN: RM101).
*3 Drift is the change in DC output for an eight hour period after a half-hour warm-up at 25℃, with the input voltage held constant at the rated input/output.

External view

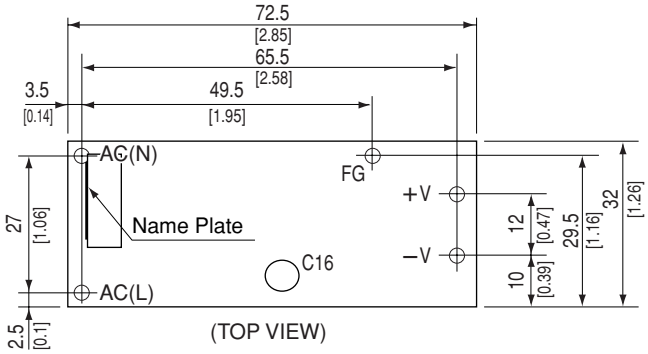

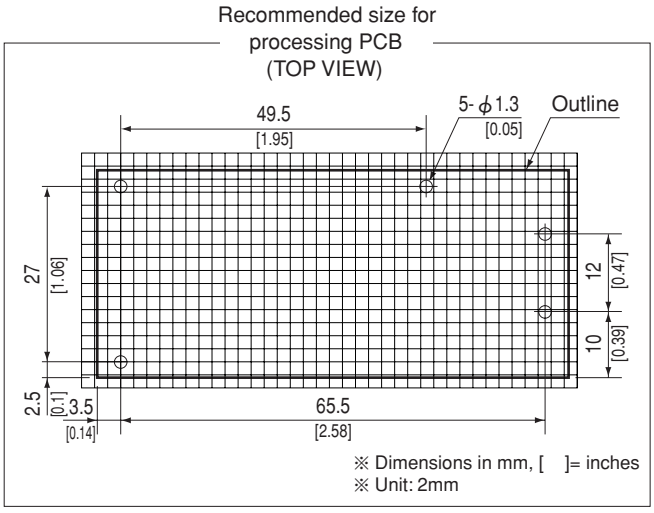

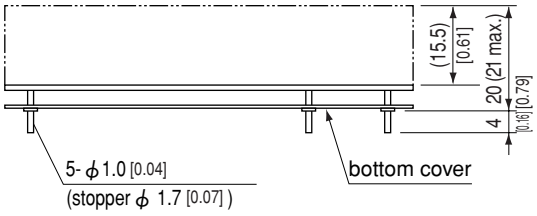

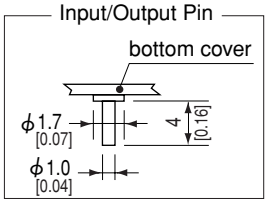

※Weight: 30g max
※Tolerance: ±0.5 [±0.02]
※PCB material: CEM-3
※PCB thickness: t=1.0 [0.04]
※Pin material: CPW with solder plated
※Recommended hole dia. to PCB: ϕ1.3
※Dimensions in mm, [ ]= inches

Performance data

■STATIC CHARACTERISTICS (VAF512)

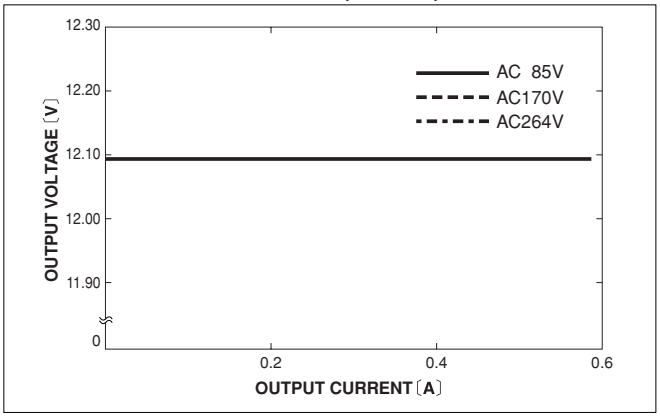

■RISE TIME (VAF512)

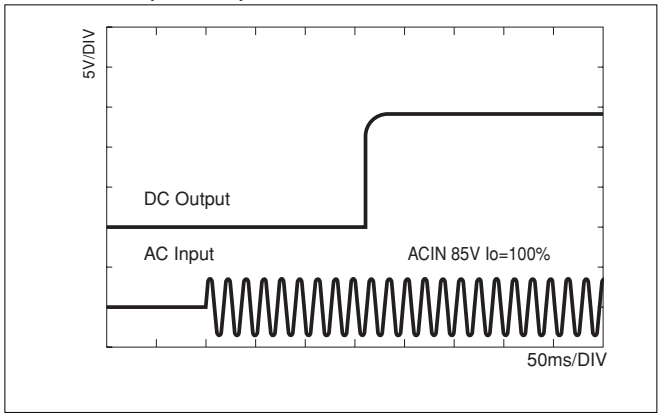

■OVERCURRENT CHARACTERISTICS (VAF512)

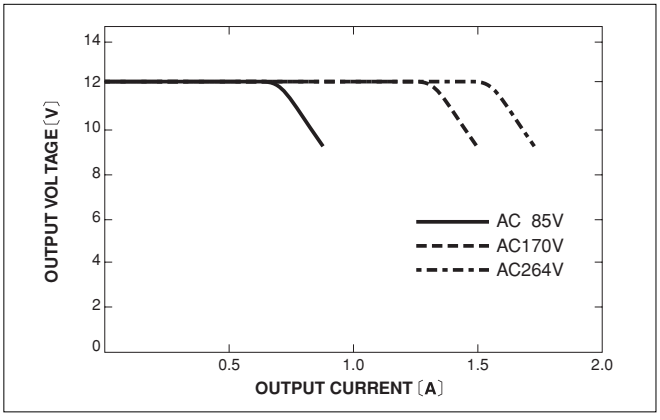

■DERATING CURVE

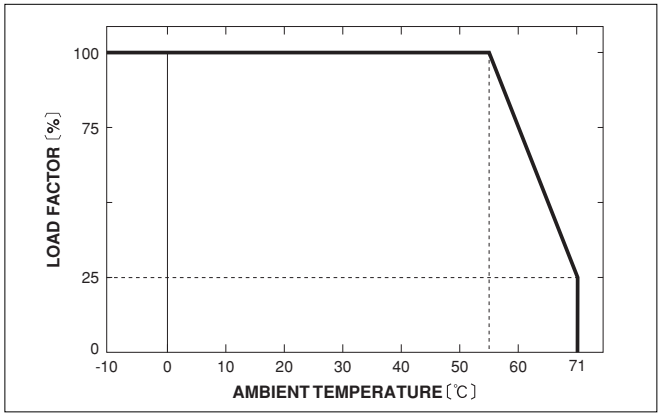

COSEL AC-DC Power Supplies PCB Mount type

VAF10

Ordering information

VAF 10 05

① ② ③

①Series name
②Output wattage
③Output voltage

RoHS

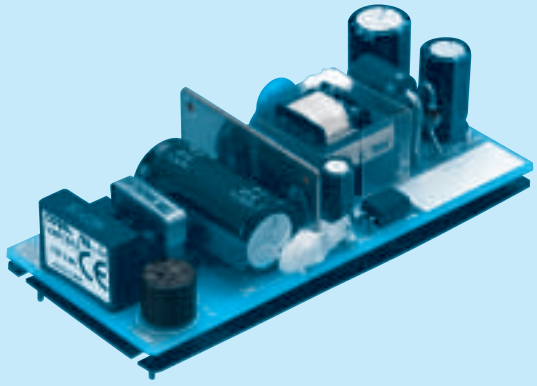

VAF

MODEL		VAF1003	VAF1005	VAF1012	VAF1015	VAF1024
MAX OUTPUT WATTAGE[W]		6.6	10.0	10.8	10.5	10.8
DC OUTPUT	VOLTAGE[V]	3.3	5	12	15	24
	CURRENT[A]	2.0 (Peak 2.4)	2.0 (Peak 2.4)	0.9 (Peak 1.08)	0.7 (Peak 0.84)	0.45 (Peak 0.54)

SPECIFICATIONS

	MODEL		VAF1003	VAF1005	VAF1012	VAF1015	VAF1024
INPUT	VOLTAGE[V]		AC85 - 264 1φ or DC110 - 370				
	CURRENT[A]	ACIN 100V	0.3typ (Io=100%)				
		ACIN 200V	0.2typ (Io=100%)				
	FREQUENCY[Hz]		47 - 440 or DC				
	INRUSH CURRENT[A]	ACIN 100V	15typ (Io=100%)				
		ACIN 200V	30typ (Io=100%)				
	LEAKAGE CURRENT[mA]		0.5max (60Hz, According to IEC60950 and DEN-AN)				
	EFFICIENCY[%]		65typ	74typ	78typ	78typ	81typ
OUTPUT	VOLTAGE[V]		3.3	5	12	15	24
	CURRENT[A]	*1	2.0 (Peak 2.4)	2.0 (Peak 2.4)	0.9 (Peak 1.08)	0.7 (Peak 0.84)	0.45 (Peak 0.54)
	LINE REGULATION[mV]		20max	20max	48max	60max	96max
	LOAD REGULATION[mV]		40max	40max	100max	120max	150max
	RIPPLE[mVp-p]	0 to +55℃ *2	80max	80max	120max	120max	150max
		-10 - 0℃ *2	140max	140max	160max	160max	200max
		Io=100 - 120% *2	180max	180max	200max	200max	240max
	RIPPLE NOISE[mVp-p]	0 to +55℃ *2	120max	120max	150max	150max	200max
		-10 - 0℃ *2	160max	160max	180max	180max	230max
		Io=100 - 120% *2	200max	200max	220max	220max	260max
	TEMPERATURE COEFFICIENT[mV]	-10 to +55℃	100max	50max	120max	150max	300max
	DRIFT[mV]	*3	20max	20max	48max	60max	96max
	OUTPUT VOLTAGE SETTING[V]		3.19 - 3.47	4.90 - 5.30	11.40 - 12.60	14.25 - 15.75	23.0 - 25.0
	OUTPUT VOLTAGE ADJUSTMENT RANGE[V]		Fixed				
	START-UP TIME[ms]		700max (ACIN 85V, Io=100%)				
	HOLD-UP TIME[ms]		10typ (ACIN 85V, Io=100%), 20typ (ACIN 100V, Io=100%)				
PROTECTION CIRCUIT	OVERCURRENT PROTECTION		Works over 125% of rating and recovers automatically				
	OVERVOLTAGE PROTECTION		Works over 115% of rating (By zener diode clamping)				
ISOLATION	INPUT-OUTPUT		AC3,000V 1minute, Cutoff current = 10mA, DC500V 50MΩ min (At Room Temperature)				
	INPUT-FG		AC2,000V 1minute, Cutoff current = 10mA, DC500V 50MΩ min (At Room Temperature)				
	OUTPUT-FG		AC500V 1minute, Cutoff current = 100mA, DC500V 50MΩ min (At Room Temperature)				
ENVIRONMENT	OPERATING TEMP.,HUMID.AND ALTITUDE		-10 to +71℃, 20 - 90%RH (Non condensing) (Refer to DERATING CURVE), 3,000m (10,000feet) max				
	STORAGE TEMP.,HUMID.AND ALTITUDE		-20 to +75℃, 20 - 90%RH (Non condensing), 9,000m (30,000feet) max				
	VIBRATION		19.6m/s² 10 - 55Hz, 3minutes period, 60minutes each along X, Y and Z axis (Non operating)				
	IMPACT		196.1m/s² 11ms, once each X, Y and Z axis (Non operating)				
SAFETY AND NOISE REGULATIONS	AGENCY APPROVALS		UL60950-1, C-UL, EN60950-1, EN50178 Complies with DEN-AN and IEC60950-1				
	CONDUCTED NOISE		Complies with FCC-B, VCCI-B, CISPR22-B, EN55022-B				
OTHERS	CASE SIZE/WEIGHT		36×21×78mm [1.42×0.83×3.07 inches] (W×H×D) / 40g max				
	COOLING METHOD		Convection				

*1 Peak load for 10sec. or less in acceptable if the total wattage is less than the rated wattage.
*2 This is the value that measured on measuring board with capasitor of 22μF. Measuared by 20MHz oscilloscope or Ripple-Noise meter (Equivalent to KEISOKU-GIKEN: RM101).
*3 Drift is the change in DC output for an eight hour period after a half-hour warm-up at 25℃, with the input voltage held constant at the rated input/output.

External view

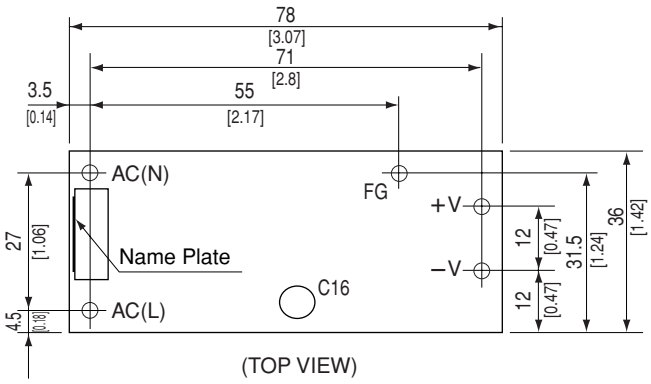

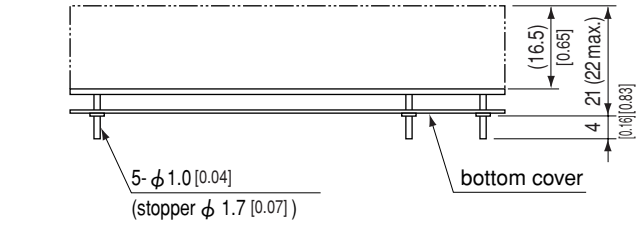

Recommended size for processing PCB (TOP VIEW)

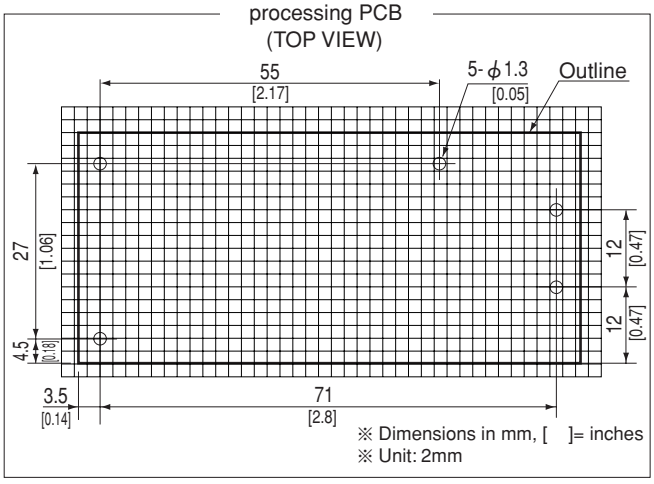

※ Dimensions in mm, [ ]= inches
※ Unit: 2mm

Input/Output Pin

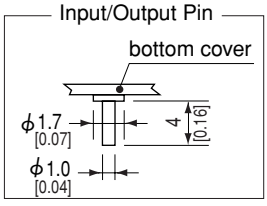

※ Weight: 40g max
※ Tolerance: ±0.5 [±0.02]
※ PCB material: CEM-3
※ PCB thickness: t=1.0 [0.04]
※ Pin material: CPW with solder plated
※ Recommended hole dia. to PCB: ϕ1.3
※ Dimensions in mm, [ ]= inches

Performance data

■STATIC CHARACTERISTICS (VAF1012)

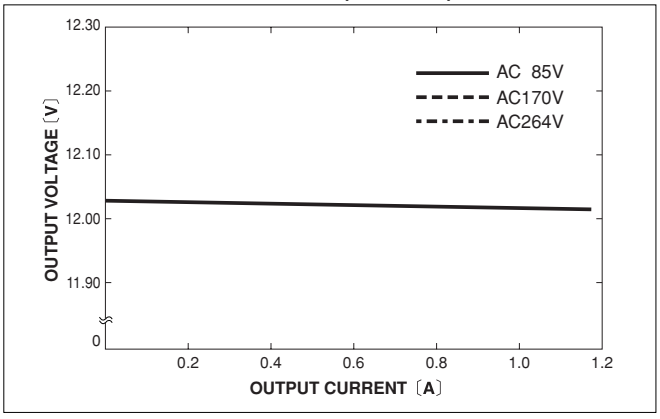

■RISE TIME (VAF1012)

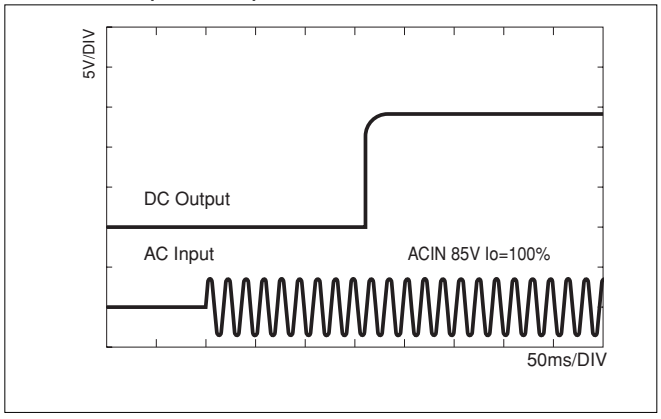

■OVERCURRENT CHARACTERISTICS (VAF1012)

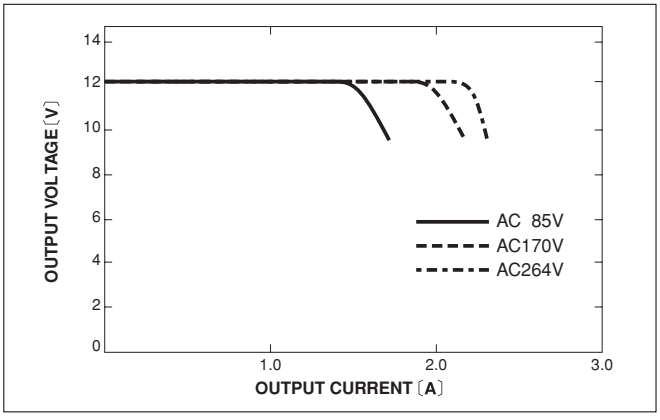

■DERATING CURVE

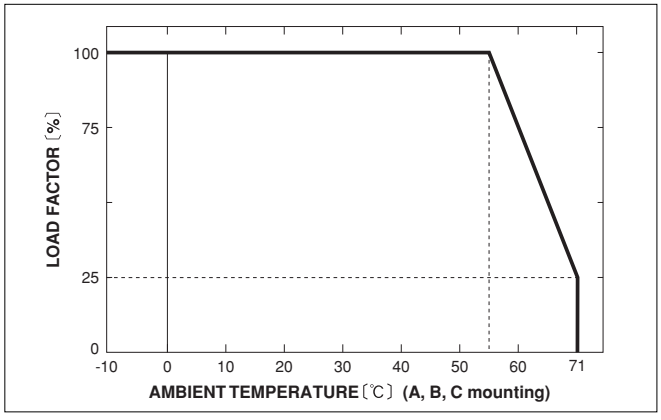

Mouser Electronics

Authorized Distributor

Click to View Pricing, Inventory, Delivery & Lifecycle Information:

Cosel:

VAF1005 VAF1024 VAF515 VAF512 VAF1015 VAF1003 VAF1012 VAF505 VAF503 VAF524

Компания «ЭлектроПласт» предлагает заключение долгосрочных отношений при поставках импортных электронных компонентов на взаимовыгодных условиях!

Наши преимущества:

- Оперативные поставки широкого спектра электронных компонентов отечественного и импортного производства напрямую от производителей и с крупнейших мировых складов;
- Поставка более 17-ти миллионов наименований электронных компонентов;
- Поставка сложных, дефицитных, либо снятых с производства позиций;
- Оперативные сроки поставки под заказ (от 5 рабочих дней);
- Экспресс доставка в любую точку России;
- Техническая поддержка проекта, помощь в подборе аналогов, поставка прототипов;
- Система менеджмента качества сертифицирована по Международному стандарту ISO 9001;
- Лицензия ФСБ на осуществление работ с использованием сведений, составляющих государственную тайну;
- Поставка специализированных компонентов (Xilinx, Altera, Analog Devices, Intersil, Interpoint, Microsemi, Aeroflex, Peregrine, Syfer, Eurofarad, Texas Instrument, Miteq, Cobham, E2V, MA-COM, Hittite, Mini-Circuits,General Dynamics и др.);

Помимо этого, одним из направлений компании «ЭлектроПласт» является направление «Источники питания». Мы предлагаем Вам помощь Конструкторского отдела:

- Подбор оптимального решения, техническое обоснование при выборе компонента;
- Подбор аналогов;
- Консультации по применению компонента;
- Поставка образцов и прототипов;
- Техническая поддержка проекта;
- Защита от снятия компонента с производства.

Как с нами связаться

Телефон: 8 (812) 309 58 32 (многоканальный)
Факс: 8 (812) 320-02-42
Электронная почта: org@eplast1.ru
Адрес: 198099, г. Санкт-Петербург, ул. Калинина, дом 2, корпус 4, литера А.