# PIC18FXX2
# Data Sheet

## High-Performance, Enhanced Flash Microcontrollers with 10-Bit A/D

© 2006 Microchip Technology Inc.

**Note the following details of the code protection feature on Microchip devices:**

- Microchip products meet the specification contained in their particular Microchip Data Sheet.
- Microchip believes that its family of products is one of the most secure families of its kind on the market today, when used in the intended manner and under normal conditions.
- There are dishonest and possibly illegal methods used to breach the code protection feature. All of these methods, to our knowledge, require using the Microchip products in a manner outside the operating specifications contained in Microchip's Data Sheets. Most likely, the person doing so is engaged in theft of intellectual property.
- Microchip is willing to work with the customer who is concerned about the integrity of their code.
- Neither Microchip nor any other semiconductor manufacturer can guarantee the security of their code. Code protection does not mean that we are guaranteeing the product as "unbreakable."

Code protection is constantly evolving. We at Microchip are committed to continuously improving the code protection features of our products. Attempts to break Microchip's code protection feature may be a violation of the Digital Millennium Copyright Act. If such acts allow unauthorized access to your software or other copyrighted work, you may have a right to sue for relief under that Act.

Information contained in this publication regarding device applications and the like is provided only for your convenience and may be superseded by updates. It is your responsibility to ensure that your application meets with your specifications. MICROCHIP MAKES NO REPRESENTATIONS OR WARRANTIES OF ANY KIND WHETHER EXPRESS OR IMPLIED, WRITTEN OR ORAL, STATUTORY OR OTHERWISE, RELATED TO THE INFORMATION, INCLUDING BUT NOT LIMITED TO ITS CONDITION, QUALITY, PERFORMANCE, MERCHANTABILITY OR FITNESS FOR PURPOSE**.** Microchip disclaims all liability arising from this information and its use. Use of Microchip devices in life support and/or safety applications is entirely at the buyer's risk, and the buyer agrees to defend, indemnify and hold harmless Microchip from any and all damages, claims, suits, or expenses resulting from such use. No licenses are conveyed, implicitly or otherwise, under any Microchip intellectual property rights.

**Trademarks**

The Microchip name and logo, the Microchip logo, Accuron, dsPIC, KEELOQ, microID, MPLAB, PIC, PICmicro, PICSTART, PRO MATE, PowerSmart, rfPIC and SmartShunt are registered trademarks of Microchip Technology Incorporated in the U.S.A. and other countries.

AmpLab, FilterLab, Migratable Memory, MXDEV, MXLAB, SEEVAL, SmartSensor and The Embedded Control Solutions Company are registered trademarks of Microchip Technology Incorporated in the U.S.A.

Analog-for-the-Digital Age, Application Maestro, CodeGuard, dsPICDEM, dsPICDEM.net, dsPICworks, ECAN, ECONOMONITOR, FanSense, FlexROM, fuzzyLAB, In-Circuit Serial Programming, ICSP, ICEPIC, Linear Active Thermistor, Mindi, MiWi, MPASM, MPLIB, MPLINK, PICkit, PICDEM, PICDEM.net, PICLAB, PICtail, PowerCal, PowerInfo, PowerMate, PowerTool, REAL ICE, rfLAB, rfPICDEM, Select Mode, Smart Serial, SmartTel, Total Endurance, UNI/O, WiperLock and ZENA are trademarks of Microchip Technology Incorporated in the U.S.A. and other countries.

SQTP is a service mark of Microchip Technology Incorporated in the U.S.A.

All other trademarks mentioned herein are property of their respective companies.

© 2006, Microchip Technology Incorporated, Printed in the U.S.A., All Rights Reserved.

Printed on recycled paper.

QUALITY MANAGEMENT SYSTEM
CERTIFIED BY DNV
ISO/TS 16949:2002

*Microchip received ISO/TS-16949:2002 certification for its worldwide headquarters, design and wafer fabrication facilities in Chandler and Tempe, Arizona, Gresham, Oregon and Mountain View, California. The Company's quality system processes and procedures are for its PICmicro® 8-bit MCUs, KEELOQ® code hopping devices, Serial EEPROMs, microperipherals, nonvolatile memory and analog products. In addition, Microchip's quality system for the design and manufacture of development systems is ISO 9001:2000 certified.*

# PIC18FXX2

## 28/40-pin High Performance, Enhanced FLASH Microcontrollers with 10-Bit A/D

### High Performance RISC CPU:

- C compiler optimized architecture/instruction set
  - Source code compatible with the PIC16 and PIC17 instruction sets
- Linear program memory addressing to 32 Kbytes
- Linear data memory addressing to 1.5 Kbytes

| Device | On-Chip Program Memory | | On-Chip RAM (bytes) | Data EEPROM (bytes) |
|---|---|---|---|---|
| | FLASH (bytes) | # Single Word Instructions | | |
| PIC18F242 | 16K | 8192 | 768 | 256 |
| PIC18F252 | 32K | 16384 | 1536 | 256 |
| PIC18F442 | 16K | 8192 | 768 | 256 |
| PIC18F452 | 32K | 16384 | 1536 | 256 |

- Up to 10 MIPs operation:
  - DC - 40 MHz osc./clock input
  - 4 MHz - 10 MHz osc./clock input with PLL active
- 16-bit wide instructions, 8-bit wide data path
- Priority levels for interrupts
- 8 x 8 Single Cycle Hardware Multiplier

### Peripheral Features:

- High current sink/source 25 mA/25 mA
- Three external interrupt pins
- Timer0 module: 8-bit/16-bit timer/counter with 8-bit programmable prescaler
- Timer1 module: 16-bit timer/counter
- Timer2 module: 8-bit timer/counter with 8-bit period register (time-base for PWM)
- Timer3 module: 16-bit timer/counter
- Secondary oscillator clock option - Timer1/Timer3
- Two Capture/Compare/PWM (CCP) modules. CCP pins that can be configured as:
  - Capture input: capture is 16-bit, max. resolution 6.25 ns (TCY/16)
  - Compare is 16-bit, max. resolution 100 ns (TCY)
  - PWM output: PWM resolution is 1- to 10-bit, max. PWM freq. @: 8-bit resolution = 156 kHz<br>10-bit resolution = 39 kHz
- Master Synchronous Serial Port (MSSP) module, Two modes of operation:
  - 3-wire SPI™ (supports all 4 SPI modes)
  - $I^2C$™ Master and Slave mode

### Peripheral Features (Continued):

- Addressable USART module:
  - Supports RS-485 and RS-232
- Parallel Slave Port (PSP) module

### Analog Features:

- Compatible 10-bit Analog-to-Digital Converter module (A/D) with:
  - Fast sampling rate
  - Conversion available during SLEEP
  - Linearity ≤ 1 LSb
- Programmable Low Voltage Detection (PLVD)
  - Supports interrupt on-Low Voltage Detection
- Programmable Brown-out Reset (BOR)

### Special Microcontroller Features:

- 100,000 erase/write cycle Enhanced FLASH program memory typical
- 1,000,000 erase/write cycle Data EEPROM memory
- FLASH/Data EEPROM Retention: > 40 years
- Self-reprogrammable under software control
- Power-on Reset (POR), Power-up Timer (PWRT) and Oscillator Start-up Timer (OST)
- Watchdog Timer (WDT) with its own On-Chip RC Oscillator for reliable operation
- Programmable code protection
- Power saving SLEEP mode
- Selectable oscillator options including:
  - 4X Phase Lock Loop (of primary oscillator)
  - Secondary Oscillator (32 kHz) clock input
- Single supply 5V In-Circuit Serial Programming™ (ICSP™) via two pins
- In-Circuit Debug (ICD) via two pins

### CMOS Technology:

- Low power, high speed FLASH/EEPROM technology
- Fully static design
- Wide operating voltage range (2.0V to 5.5V)
- Industrial and Extended temperature ranges
- Low power consumption:
  - < 1.6 mA typical @ 5V, 4 MHz
  - 25 μA typical @ 3V, 32 kHz
  - < 0.2 μA typical standby current

© 2006 Microchip Technology Inc.

## Pin Diagrams

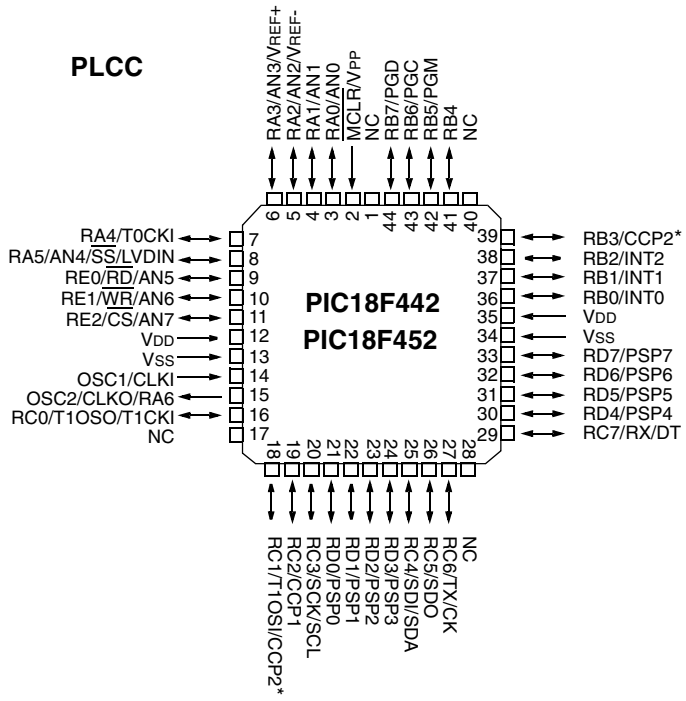


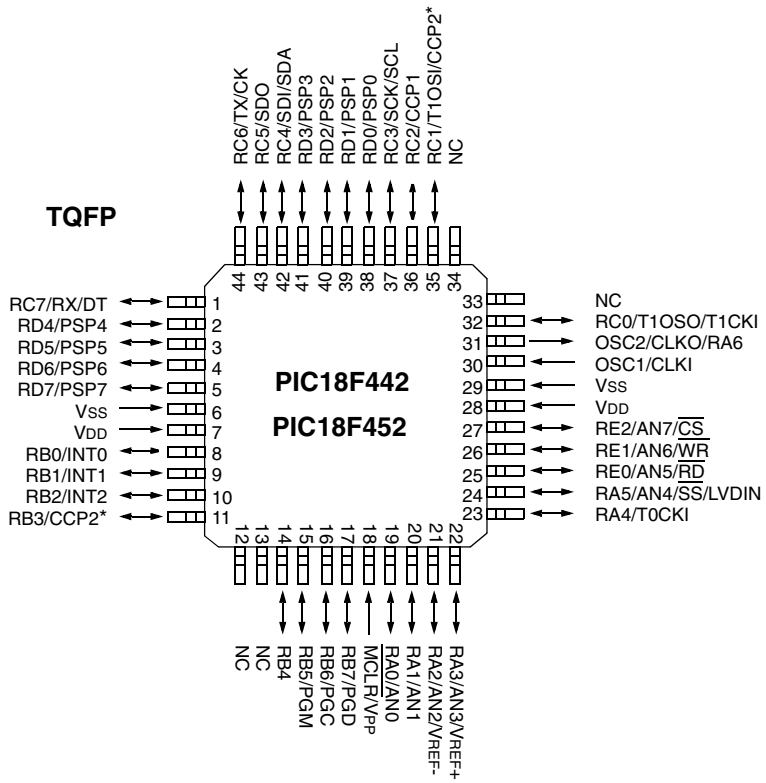


* RB3 is the alternate pin for the CCP2 pin multiplexing.


© 2006 Microchip Technology Inc.

## Pin Diagrams (Cont.'d)

### DIP

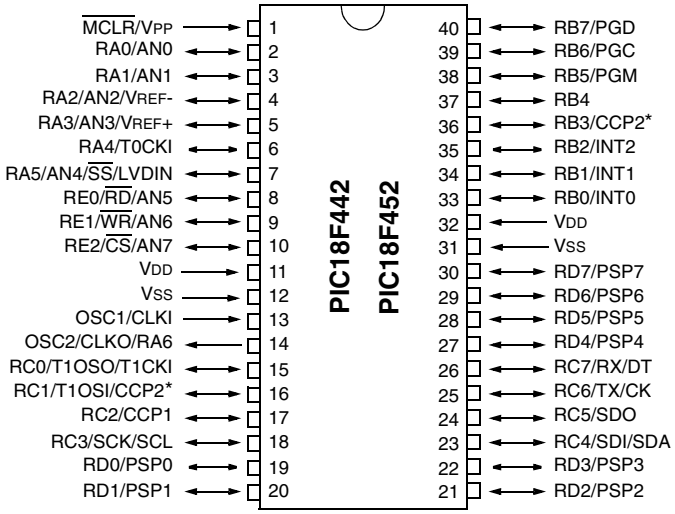


**Note:** Pin compatible with 40-pin PIC16C7X devices.

### DIP, SOIC

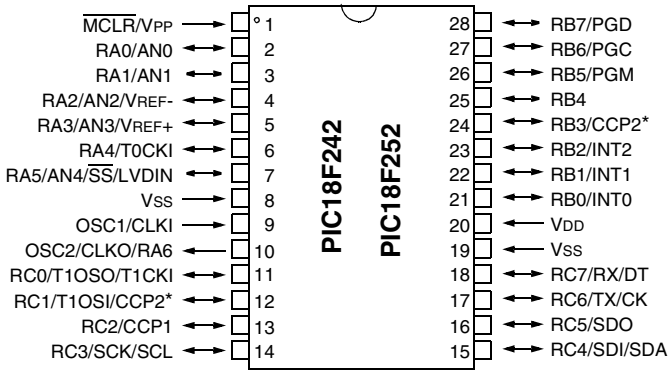


* RB3 is the alternate pin for the CCP2 pin multiplexing.

## Table of Contents

1.0 Device Overview ..... 7
2.0 Oscillator Configurations ..... 17
3.0 Reset ..... 25
4.0 Memory Organization ..... 35
5.0 FLASH Program Memory ..... 55
6.0 Data EEPROM Memory ..... 65
7.0 8 X 8 Hardware Multiplier ..... 71
8.0 Interrupts ..... 73
9.0 I/O Ports ..... 87
10.0 Timer0 Module ..... 103
11.0 Timer1 Module ..... 107
12.0 Timer2 Module ..... 111
13.0 Timer3 Module ..... 113
14.0 Capture/Compare/PWM (CCP) Modules ..... 117
15.0 Master Synchronous Serial Port (MSSP) Module ..... 125
16.0 Addressable Universal Synchronous Asynchronous Receiver Transmitter (USART) ..... 165
17.0 Compatible 10-bit Analog-to-Digital Converter (A/D) Module ..... 181
18.0 Low Voltage Detect ..... 189
19.0 Special Features of the CPU ..... 195
20.0 Instruction Set Summary ..... 211
21.0 Development Support ..... 253
22.0 Electrical Characteristics ..... 259
23.0 DC and AC Characteristics Graphs and Tables ..... 289
24.0 Packaging Information ..... 305
Appendix A: Revision History ..... 313
Appendix B: Device Differences ..... 313
Appendix C: Conversion Considerations ..... 314
Appendix D: Migration from Baseline to Enhanced Devices ..... 314
Appendix E: Migration from Mid-range to Enhanced Devices ..... 315
Appendix F: Migration from High-end to Enhanced Devices ..... 315
Index ..... 317
On-Line Support ..... 327
Reader Response ..... 328
PIC18FXX2 Product Identification System ..... 329


© 2006 Microchip Technology Inc.

## TO OUR VALUED CUSTOMERS

It is our intention to provide our valued customers with the best documentation possible to ensure successful use of your Microchip products. To this end, we will continue to improve our publications to better suit your needs. Our publications will be refined and enhanced as new volumes and updates are introduced.

If you have any questions or comments regarding this publication, please contact the Marketing Communications Department via E-mail at **docerrors@microchip.com** or fax the **Reader Response Form** in the back of this data sheet to (480) 792-4150. We welcome your feedback.

### Most Current Data Sheet

To obtain the most up-to-date version of this data sheet, please register at our Worldwide Web site at:

http://www.microchip.com

You can determine the version of a data sheet by examining its literature number found on the bottom outside corner of any page. The last character of the literature number is the version number, (e.g., DS30000A is version A of document DS30000).

### Errata

An errata sheet, describing minor operational differences from the data sheet and recommended workarounds, may exist for current devices. As device/documentation issues become known to us, we will publish an errata sheet. The errata will specify the revision of silicon and revision of document to which it applies.

To determine if an errata sheet exists for a particular device, please check with one of the following:

- Microchip's Worldwide Web site; http://www.microchip.com
- Your local Microchip sales office (see last page)

When contacting a sales office, please specify which device, revision of silicon and data sheet (include literature number) you are using.

### Customer Notification System

Register on our web site at **www.microchip.com** to receive the most current information on all of our products.

**NOTES:**


© 2006 Microchip Technology Inc.

## 1.0 DEVICE OVERVIEW

This document contains device specific information for the following devices:

- PIC18F242
- PIC18F252
- PIC18F442
- PIC18F452

These devices come in 28-pin and 40/44-pin packages. The 28-pin devices do not have a Parallel Slave Port (PSP) implemented and the number of Analog-to-Digital (A/D) converter input channels is reduced to 5. An overview of features is shown in Table 1-1.

The following two figures are device block diagrams sorted by pin count: 28-pin for Figure 1-1 and 40/44-pin for Figure 1-2. The 28-pin and 40/44-pin pinouts are listed in Table 1-2 and Table 1-3, respectively.

**TABLE 1-1: DEVICE FEATURES**

| Features | PIC18F242 | PIC18F252 | PIC18F442 | PIC18F452 |
|---|---|---|---|---|
| Operating Frequency | DC - 40 MHz | DC - 40 MHz | DC - 40 MHz | DC - 40 MHz |
| Program Memory (Bytes) | 16K | 32K | 16K | 32K |
| Program Memory (Instructions) | 8192 | 16384 | 8192 | 16384 |
| Data Memory (Bytes) | 768 | 1536 | 768 | 1536 |
| Data EEPROM Memory (Bytes) | 256 | 256 | 256 | 256 |
| Interrupt Sources | 17 | 17 | 18 | 18 |
| I/O Ports | Ports A, B, C | Ports A, B, C | Ports A, B, C, D, E | Ports A, B, C, D, E |
| Timers | 4 | 4 | 4 | 4 |
| Capture/Compare/PWM Modules | 2 | 2 | 2 | 2 |
| Serial Communications | MSSP, Addressable USART | MSSP, Addressable USART | MSSP, Addressable USART | MSSP, Addressable USART |
| Parallel Communications | — | — | PSP | PSP |
| 10-bit Analog-to-Digital Module | 5 input channels | 5 input channels | 8 input channels | 8 input channels |
| RESETS (and Delays) | POR, BOR, `RESET` Instruction, Stack Full, Stack Underflow (PWRT, OST) | POR, BOR, `RESET` Instruction, Stack Full, Stack Underflow (PWRT, OST) | POR, BOR, `RESET` Instruction, Stack Full, Stack Underflow (PWRT, OST) | POR, BOR, `RESET` Instruction, Stack Full, Stack Underflow (PWRT, OST) |
| Programmable Low Voltage Detect | Yes | Yes | Yes | Yes |
| Programmable Brown-out Reset | Yes | Yes | Yes | Yes |
| Instruction Set | 75 Instructions | 75 Instructions | 75 Instructions | 75 Instructions |
| Packages | 28-pin DIP<br>28-pin SOIC | 28-pin DIP<br>28-pin SOIC | 40-pin DIP<br>44-pin PLCC<br>44-pin TQFP | 40-pin DIP<br>44-pin PLCC<br>44-pin TQFP |

© 2006 Microchip Technology Inc.

**FIGURE 1-1: PIC18F2X2 BLOCK DIAGRAM**

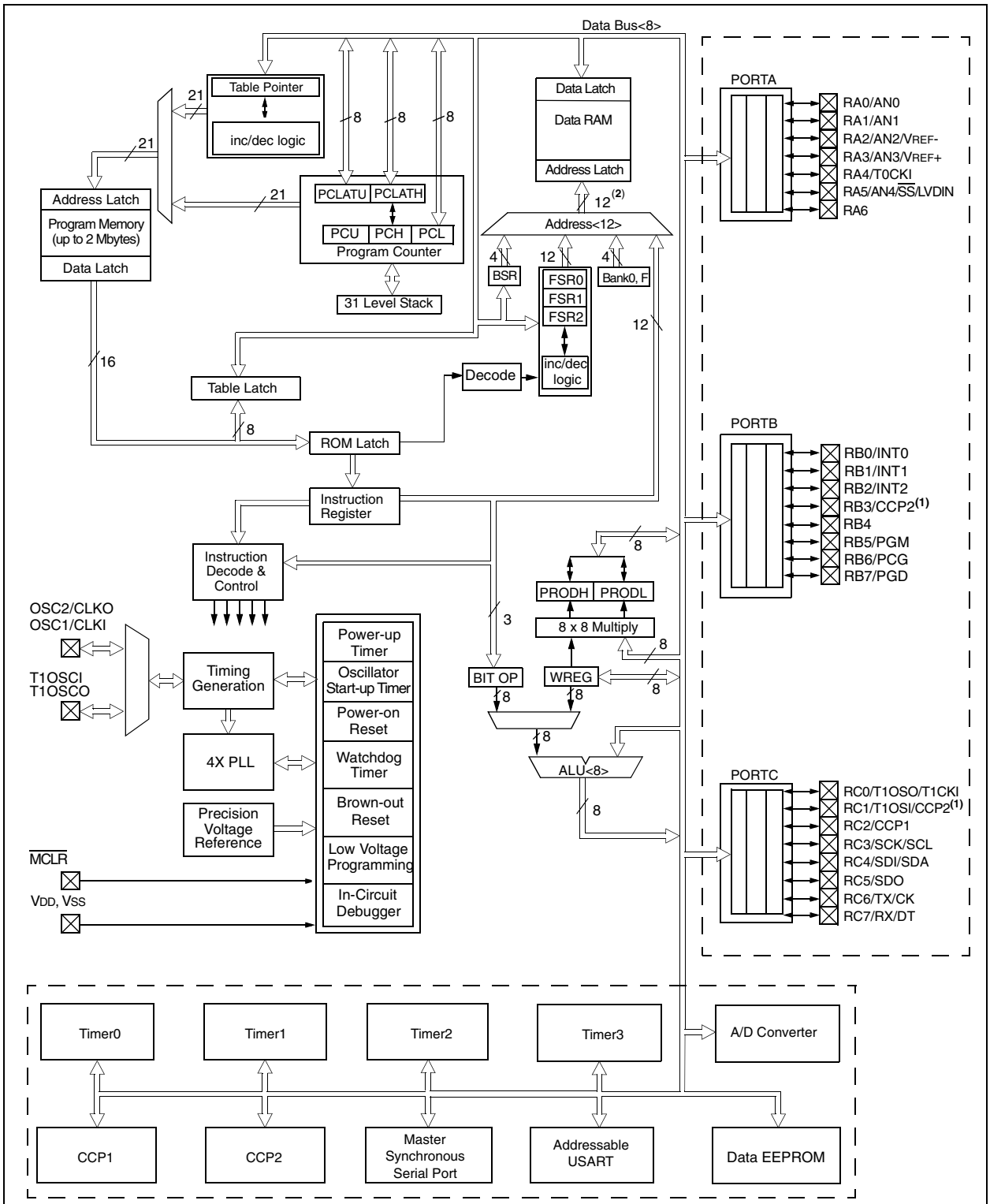


**Note 1:** Optional multiplexing of CCP2 input/output with RB3 is enabled by selection of configuration bit.

**2:** The high order bits of the Direct Address for the RAM are from the BSR register (except for the `MOVFF` instruction).

**3:** Many of the general purpose I/O pins are multiplexed with one or more peripheral module functions. The multiplexing combinations are device dependent.


© 2006 Microchip Technology Inc.

**FIGURE 1-2: PIC18F4X2 BLOCK DIAGRAM**

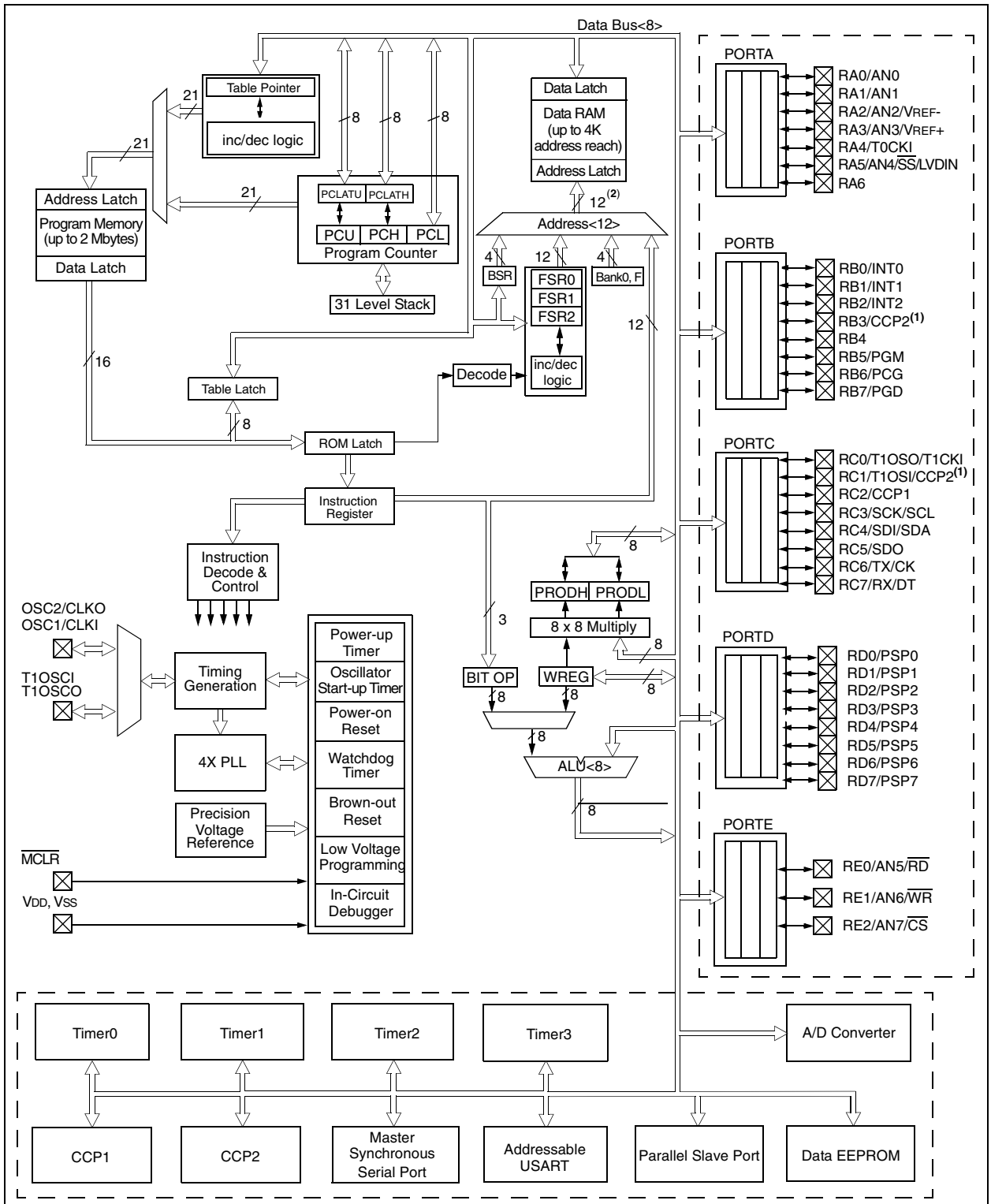


**Note 1:** Optional multiplexing of CCP2 input/output with RB3 is enabled by selection of configuration bit.

**2:** The high order bits of the Direct Address for the RAM are from the BSR register (except for the `MOVFF` instruction).

**3:** Many of the general purpose I/O pins are multiplexed with one or more peripheral module functions. The multiplexing combinations are device dependent.

**TABLE 1-2: PIC18F2X2 PINOUT I/O DESCRIPTIONS**

| Pin Name | Pin Number | | Pin Type | Buffer Type | Description |
|---|---|---|---|---|---|
| | DIP | SOIC | | | |
| $\overline{MCLR}$/VPP | 1 | 1 | | | Master Clear (input) or high voltage ICSP programming enable pin. |
| $\overline{MCLR}$ | | | I | ST | Master Clear (Reset) input. This pin is an active low RESET to the device. |
| VPP | | | I | ST | High voltage ICSP programming enable pin. |
| NC | — | — | — | — | These pins should be left unconnected. |
| OSC1/CLKI | 9 | 9 | | | Oscillator crystal or external clock input. |
| OSC1 | | | I | ST | Oscillator crystal input or external clock source input. ST buffer when configured in RC mode, CMOS otherwise. |
| CLKI | | | I | CMOS | External clock source input. Always associated with pin function OSC1. (See related OSC1/CLKI, OSC2/CLKO pins.) |
| OSC2/CLKO/RA6 | 10 | 10 | | | Oscillator crystal or clock output. |
| OSC2 | | | O | — | Oscillator crystal output. Connects to crystal or resonator in Crystal Oscillator mode. |
| CLKO | | | O | — | In RC mode, OSC2 pin outputs CLKO which has 1/4 the frequency of OSC1, and denotes the instruction cycle rate. |
| RA6 | | | I/O | TTL | General Purpose I/O pin. |
| | | | | | PORTA is a bi-directional I/O port. |
| RA0/AN0 | 2 | 2 | | | |
| RA0 | | | I/O | TTL | Digital I/O. |
| AN0 | | | I | Analog | Analog input 0. |
| RA1/AN1 | 3 | 3 | | | |
| RA1 | | | I/O | TTL | Digital I/O. |
| AN1 | | | I | Analog | Analog input 1. |
| RA2/AN2/VREF- | 4 | 4 | | | |
| RA2 | | | I/O | TTL | Digital I/O. |
| AN2 | | | I | Analog | Analog input 2. |
| VREF- | | | I | Analog | A/D Reference Voltage (Low) input. |
| RA3/AN3/VREF+ | 5 | 5 | | | |
| RA3 | | | I/O | TTL | Digital I/O. |
| AN3 | | | I | Analog | Analog input 3. |
| VREF+ | | | I | Analog | A/D Reference Voltage (High) input. |
| RA4/T0CKI | 6 | 6 | | | |
| RA4 | | | I/O | ST/OD | Digital I/O. Open drain when configured as output. |
| T0CKI | | | I | ST | Timer0 external clock input. |
| RA5/AN4/$\overline{SS}$/LVDIN | 7 | 7 | | | |
| RA5 | | | I/O | TTL | Digital I/O. |
| AN4 | | | I | Analog | Analog input 4. |
| $\overline{SS}$ | | | I | ST | SPI Slave Select input. |
| LVDIN | | | I | Analog | Low Voltage Detect Input. |
| RA6 | | | | | See the OSC2/CLKO/RA6 pin. |

Legend: TTL = TTL compatible input
ST = Schmitt Trigger input with CMOS levels
O = Output
OD = Open Drain (no P diode to VDD)
CMOS = CMOS compatible input or output
I = Input
P = Power


© 2006 Microchip Technology Inc.

**TABLE 1-2: PIC18F2X2 PINOUT I/O DESCRIPTIONS (CONTINUED)**

| Pin Name | Pin Number | | Pin Type | Buffer Type | Description |
|---|---|---|---|---|---|
| | DIP | SOIC | | | |
| | | | | | PORTB is a bi-directional I/O port. PORTB can be software programmed for internal weak pull-ups on all inputs. |
| RB0/INT0 | 21 | 21 | | | |
| RB0 | | | I/O | TTL | Digital I/O. |
| INT0 | | | I | ST | External Interrupt 0. |
| RB1/INT1 | 22 | 22 | | | |
| RB1 | | | I/O | TTL | |
| INT1 | | | I | ST | External Interrupt 1. |
| RB2/INT2 | 23 | 23 | | | |
| RB2 | | | I/O | TTL | Digital I/O. |
| INT2 | | | I | ST | External Interrupt 2. |
| RB3/CCP2 | 24 | 24 | | | |
| RB3 | | | I/O | TTL | Digital I/O. |
| CCP2 | | | I/O | ST | Capture2 input, Compare2 output, PWM2 output. |
| RB4 | 25 | 25 | I/O | TTL | Digital I/O. Interrupt-on-change pin. |
| RB5/PGM | 26 | 26 | | | |
| RB5 | | | I/O | TTL | Digital I/O. Interrupt-on-change pin. |
| PGM | | | I/O | ST | Low Voltage ICSP programming enable pin. |
| RB6/PGC | 27 | 27 | | | |
| RB6 | | | I/O | TTL | Digital I/O. Interrupt-on-change pin. |
| PGC | | | I/O | ST | In-Circuit Debugger and ICSP programming clock pin. |
| RB7/PGD | 28 | 28 | | | |
| RB7 | | | I/O | TTL | Digital I/O. Interrupt-on-change pin. |
| PGD | | | I/O | ST | In-Circuit Debugger and ICSP programming data pin. |

Legend: TTL = TTL compatible input
ST = Schmitt Trigger input with CMOS levels
O = Output
OD = Open Drain (no P diode to $V_{DD}$)
CMOS = CMOS compatible input or output
I = Input
P = Power

**TABLE 1-2: PIC18F2X2 PINOUT I/O DESCRIPTIONS (CONTINUED)**

| Pin Name | Pin Number | | Pin Type | Buffer Type | Description |
|---|---|---|---|---|---|
| | DIP | SOIC | | | |
| | | | | | PORTC is a bi-directional I/O port. |
| RC0/T1OSO/T1CKI | 11 | 11 | | | |
| RC0 | | | I/O | ST | Digital I/O. |
| T1OSO | | | O | — | Timer1 oscillator output. |
| T1CKI | | | I | ST | Timer1/Timer3 external clock input. |
| RC1/T1OSI/CCP2 | 12 | 12 | | | |
| RC1 | | | I/O | ST | Digital I/O. |
| T1OSI | | | I | CMOS | Timer1 oscillator input. |
| CCP2 | | | I/O | ST | Capture2 input, Compare2 output, PWM2 output. |
| RC2/CCP1 | 13 | 13 | | | |
| RC2 | | | I/O | ST | Digital I/O. |
| CCP1 | | | I/O | ST | Capture1 input/Compare1 output/PWM1 output. |
| RC3/SCK/SCL | 14 | 14 | | | |
| RC3 | | | I/O | ST | Digital I/O. |
| SCK | | | I/O | ST | Synchronous serial clock input/output for SPI mode. |
| SCL | | | I/O | ST | Synchronous serial clock input/output for $I^2C$ mode |
| RC4/SDI/SDA | 15 | 15 | | | |
| RC4 | | | I/O | ST | Digital I/O. |
| SDI | | | I | ST | SPI Data In. |
| SDA | | | I/O | ST | $I^2C$ Data I/O. |
| RC5/SDO | 16 | 16 | | | |
| RC5 | | | I/O | ST | Digital I/O. |
| SDO | | | O | — | SPI Data Out. |
| RC6/TX/CK | 17 | 17 | | | |
| RC6 | | | I/O | ST | Digital I/O. |
| TX | | | O | — | USART Asynchronous Transmit. |
| CK | | | I/O | ST | USART Synchronous Clock (see related RX/DT). |
| RC7/RX/DT | 18 | 18 | | | |
| RC7 | | | I/O | ST | Digital I/O. |
| RX | | | I | ST | USART Asynchronous Receive. |
| DT | | | I/O | ST | USART Synchronous Data (see related TX/CK). |
| VSS | 8, 19 | 8, 19 | P | — | Ground reference for logic and I/O pins. |
| VDD | 20 | 20 | P | — | Positive supply for logic and I/O pins. |

Legend: TTL = TTL compatible input
ST = Schmitt Trigger input with CMOS levels
O = Output
OD = Open Drain (no P diode to VDD)
CMOS = CMOS compatible input or output
I = Input
P = Power


© 2006 Microchip Technology Inc.

**TABLE 1-3: PIC18F4X2 PINOUT I/O DESCRIPTIONS**

| Pin Name | Pin Number | | | Pin Type | Buffer Type | Description |
|---|---|---|---|---|---|---|
| | DIP | PLCC | TQFP | | | |
| $\overline{MCLR}$/VPP | 1 | 2 | 18 | | | Master Clear (input) or high voltage ICSP programming enable pin. |
| $\overline{MCLR}$ | | | | I | ST | Master Clear (Reset) input. This pin is an active low RESET to the device. |
| VPP | | | | I | ST | High voltage ICSP programming enable pin. |
| NC | — | | | — | — | These pins should be left unconnected. |
| OSC1/CLKI | 13 | 14 | 30 | | | Oscillator crystal or external clock input. |
| OSC1 | | | | I | ST | Oscillator crystal input or external clock source input. ST buffer when configured in RC mode, CMOS otherwise. |
| CLKI | | | | I | CMOS | External clock source input. Always associated with pin function OSC1. (See related OSC1/CLKI, OSC2/CLKO pins.) |
| OSC2/CLKO/RA6 | 14 | 15 | 31 | | | Oscillator crystal or clock output. |
| OSC2 | | | | O | — | Oscillator crystal output. Connects to crystal or resonator in Crystal Oscillator mode. |
| CLKO | | | | O | — | In RC mode, OSC2 pin outputs CLKO, which has 1/4 the frequency of OSC1 and denotes the instruction cycle rate. |
| RA6 | | | | I/O | TTL | General Purpose I/O pin. |
| | | | | | | PORTA is a bi-directional I/O port. |
| RA0/AN0 | 2 | 3 | 19 | | | |
| RA0 | | | | I/O | TTL | Digital I/O. |
| AN0 | | | | I | Analog | Analog input 0. |
| RA1/AN1 | 3 | 4 | 20 | | | |
| RA1 | | | | I/O | TTL | Digital I/O. |
| AN1 | | | | I | Analog | Analog input 1. |
| RA2/AN2/VREF- | 4 | 5 | 21 | | | |
| RA2 | | | | I/O | TTL | Digital I/O. |
| AN2 | | | | I | Analog | Analog input 2. |
| VREF- | | | | I | Analog | A/D Reference Voltage (Low) input. |
| RA3/AN3/VREF+ | 5 | 6 | 22 | | | |
| RA3 | | | | I/O | TTL | Digital I/O. |
| AN3 | | | | I | Analog | Analog input 3. |
| VREF+ | | | | I | Analog | A/D Reference Voltage (High) input. |
| RA4/T0CKI | 6 | 7 | 23 | | | |
| RA4 | | | | I/O | ST/OD | Digital I/O. Open drain when configured as output. |
| T0CKI | | | | I | ST | Timer0 external clock input. |
| RA5/AN4/$\overline{SS}$/LVDIN | 7 | 8 | 24 | | | |
| RA5 | | | | I/O | TTL | Digital I/O. |
| AN4 | | | | I | Analog | Analog input 4. |
| $\overline{SS}$ | | | | I | ST | SPI Slave Select input. |
| LVDIN | | | | I | Analog | Low Voltage Detect Input. |
| RA6 | | | | | | (See the OSC2/CLKO/RA6 pin.) |

Legend: TTL = TTL compatible input
ST = Schmitt Trigger input with CMOS levels
O = Output
OD = Open Drain (no P diode to VDD)
CMOS = CMOS compatible input or output
I = Input
P = Power

**TABLE 1-3: PIC18F4X2 PINOUT I/O DESCRIPTIONS (CONTINUED)**

| Pin Name | Pin Number | | | Pin Type | Buffer Type | Description |
|---|---|---|---|---|---|---|
| | DIP | PLCC | TQFP | | | |
| | | | | | | PORTB is a bi-directional I/O port. PORTB can be software programmed for internal weak pull-ups on all inputs. |
| RB0/INT0 | 33 | 36 | 8 | | | |
| RB0 | | | | I/O | TTL | Digital I/O. |
| INT0 | | | | I | ST | External Interrupt 0. |
| RB1/INT1 | 34 | 37 | 9 | | | |
| RB1 | | | | I/O | TTL | |
| INT1 | | | | I | ST | External Interrupt 1. |
| RB2/INT2 | 35 | 38 | 10 | | | |
| RB2 | | | | I/O | TTL | Digital I/O. |
| INT2 | | | | I | ST | External Interrupt 2. |
| RB3/CCP2 | 36 | 39 | 11 | | | |
| RB3 | | | | I/O | TTL | Digital I/O. |
| CCP2 | | | | I/O | ST | Capture2 input, Compare2 output, PWM2 output. |
| RB4 | 37 | 41 | 14 | I/O | TTL | Digital I/O. Interrupt-on-change pin. |
| RB5/PGM | 38 | 42 | 15 | | | |
| RB5 | | | | I/O | TTL | Digital I/O. Interrupt-on-change pin. |
| PGM | | | | I/O | ST | Low Voltage ICSP programming enable pin. |
| RB6/PGC | 39 | 43 | 16 | | | |
| RB6 | | | | I/O | TTL | Digital I/O. Interrupt-on-change pin. |
| PGC | | | | I/O | ST | In-Circuit Debugger and ICSP programming clock pin. |
| RB7/PGD | 40 | 44 | 17 | | | |
| RB7 | | | | I/O | TTL | Digital I/O. Interrupt-on-change pin. |
| PGD | | | | I/O | ST | In-Circuit Debugger and ICSP programming data pin. |

Legend: TTL = TTL compatible input
ST = Schmitt Trigger input with CMOS levels
O = Output
OD = Open Drain (no P diode to $V_{DD}$)
CMOS = CMOS compatible input or output
I = Input
P = Power


© 2006 Microchip Technology Inc.

**TABLE 1-3: PIC18F4X2 PINOUT I/O DESCRIPTIONS (CONTINUED)**

| Pin Name | Pin Number | | | Pin Type | Buffer Type | Description |
|---|---|---|---|---|---|---|
| | DIP | PLCC | TQFP | | | |
| | | | | | | PORTC is a bi-directional I/O port. |
| RC0/T1OSO/T1CKI | 15 | 16 | 32 | | | |
| RC0 | | | | I/O | ST | Digital I/O. |
| T1OSO | | | | O | — | Timer1 oscillator output. |
| T1CKI | | | | I | ST | Timer1/Timer3 external clock input. |
| RC1/T1OSI/CCP2 | 16 | 18 | 35 | | | |
| RC1 | | | | I/O | ST | Digital I/O. |
| T1OSI | | | | I | CMOS | Timer1 oscillator input. |
| CCP2 | | | | I/O | ST | Capture2 input, Compare2 output, PWM2 output. |
| RC2/CCP1 | 17 | 19 | 36 | | | |
| RC2 | | | | I/O | ST | Digital I/O. |
| CCP1 | | | | I/O | ST | Capture1 input/Compare1 output/PWM1 output. |
| RC3/SCK/SCL | 18 | 20 | 37 | | | |
| RC3 | | | | I/O | ST | Digital I/O. |
| SCK | | | | I/O | ST | Synchronous serial clock input/output for SPI mode. |
| SCL | | | | I/O | ST | Synchronous serial clock input/output for $I^2C$ mode. |
| RC4/SDI/SDA | 23 | 25 | 42 | | | |
| RC4 | | | | I/O | ST | Digital I/O. |
| SDI | | | | I | ST | SPI Data In. |
| SDA | | | | I/O | ST | $I^2C$ Data I/O. |
| RC5/SDO | 24 | 26 | 43 | | | |
| RC5 | | | | I/O | ST | Digital I/O. |
| SDO | | | | O | — | SPI Data Out. |
| RC6/TX/CK | 25 | 27 | 44 | | | |
| RC6 | | | | I/O | ST | Digital I/O. |
| TX | | | | O | — | USART Asynchronous Transmit. |
| CK | | | | I/O | ST | USART Synchronous Clock (see related RX/DT). |
| RC7/RX/DT | 26 | 29 | 1 | | | |
| RC7 | | | | I/O | ST | Digital I/O. |
| RX | | | | I | ST | USART Asynchronous Receive. |
| DT | | | | I/O | ST | USART Synchronous Data (see related TX/CK). |

Legend: TTL = TTL compatible input
ST = Schmitt Trigger input with CMOS levels
O = Output
OD = Open Drain (no P diode to $V_{DD}$)
CMOS = CMOS compatible input or output
I = Input
P = Power

**TABLE 1-3: PIC18F4X2 PINOUT I/O DESCRIPTIONS (CONTINUED)**

| Pin Name | Pin Number | | | Pin Type | Buffer Type | Description |
|---|---|---|---|---|---|---|
| | DIP | PLCC | TQFP | | | |
| | | | | | | PORTD is a bi-directional I/O port, or a Parallel Slave Port (PSP) for interfacing to a microprocessor port. These pins have TTL input buffers when PSP module is enabled. |
| RD0/PSP0 | 19 | 21 | 38 | I/O | ST<br>TTL | Digital I/O.<br>Parallel Slave Port Data. |
| RD1/PSP1 | 20 | 22 | 39 | I/O | ST<br>TTL | Digital I/O.<br>Parallel Slave Port Data. |
| RD2/PSP2 | 21 | 23 | 40 | I/O | ST<br>TTL | Digital I/O.<br>Parallel Slave Port Data. |
| RD3/PSP3 | 22 | 24 | 41 | I/O | ST<br>TTL | Digital I/O.<br>Parallel Slave Port Data. |
| RD4/PSP4 | 27 | 30 | 2 | I/O | ST<br>TTL | Digital I/O.<br>Parallel Slave Port Data. |
| RD5/PSP5 | 28 | 31 | 3 | I/O | ST<br>TTL | Digital I/O.<br>Parallel Slave Port Data. |
| RD6/PSP6 | 29 | 32 | 4 | I/O | ST<br>TTL | Digital I/O.<br>Parallel Slave Port Data. |
| RD7/PSP7 | 30 | 33 | 5 | I/O | ST<br>TTL | Digital I/O.<br>Parallel Slave Port Data. |
| | | | | | | PORTE is a bi-directional I/O port. |
| RE0/$\overline{RD}$/AN5 | 8 | 9 | 25 | I/O | | |
| RE0 | | | | | ST | Digital I/O. |
| $\overline{RD}$ | | | | | TTL | Read control for parallel slave port (see also $\overline{WR}$ and $\overline{CS}$ pins). |
| AN5 | | | | | Analog | Analog input 5. |
| RE1/$\overline{WR}$/AN6 | 9 | 10 | 26 | I/O | | |
| RE1 | | | | | ST | Digital I/O. |
| $\overline{WR}$ | | | | | TTL | Write control for parallel slave port (see $\overline{CS}$ and $\overline{RD}$ pins). |
| AN6 | | | | | Analog | Analog input 6. |
| RE2/$\overline{CS}$/AN7 | 10 | 11 | 27 | I/O | | |
| RE2 | | | | | ST | Digital I/O. |
| $\overline{CS}$ | | | | | TTL | Chip Select control for parallel slave port (see related $\overline{RD}$ and $\overline{WR}$). |
| AN7 | | | | | Analog | Analog input 7. |
| VSS | 12, 31 | 13, 34 | 6, 29 | P | — | Ground reference for logic and I/O pins. |
| VDD | 11, 32 | 12, 35 | 7, 28 | P | — | Positive supply for logic and I/O pins. |

Legend: TTL = TTL compatible input
ST = Schmitt Trigger input with CMOS levels
O = Output
OD = Open Drain (no P diode to VDD)
CMOS = CMOS compatible input or output
I = Input
P = Power


© 2006 Microchip Technology Inc.

# 2.0 OSCILLATOR CONFIGURATIONS

## 2.1 Oscillator Types

The PIC18FXX2 can be operated in eight different Oscillator modes. The user can program three configuration bits (FOSC2, FOSC1, and FOSC0) to select one of these eight modes:

1. LP — Low Power Crystal
2. XT — Crystal/Resonator
3. HS — High Speed Crystal/Resonator
4. HS + PLL — High Speed Crystal/Resonator with PLL enabled
5. RC — External Resistor/Capacitor
6. RCIO — External Resistor/Capacitor with I/O pin enabled
7. EC — External Clock
8. ECIO — External Clock with I/O pin enabled

## 2.2 Crystal Oscillator/Ceramic Resonators

In XT, LP, HS or HS+PLL Oscillator modes, a crystal or ceramic resonator is connected to the OSC1 and OSC2 pins to establish oscillation. Figure 2-1 shows the pin connections.

The PIC18FXX2 oscillator design requires the use of a parallel cut crystal.

**Note:** Use of a series cut crystal may give a frequency out of the crystal manufacturers specifications.

**FIGURE 2-1: CRYSTAL/CERAMIC RESONATOR OPERATION (HS, XT OR LP CONFIGURATION)**

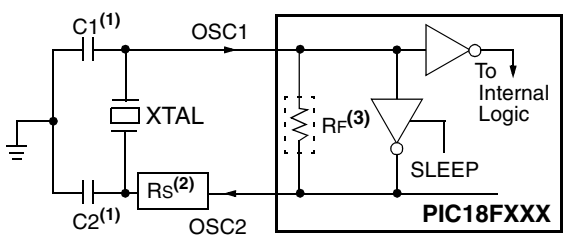


**Note 1:** See Table 2-1 and Table 2-2 for recommended values of C1 and C2.

**2:** A series resistor (RS) may be required for AT strip cut crystals.

**3:** RF varies with the Oscillator mode chosen.

**TABLE 2-1: CAPACITOR SELECTION FOR CERAMIC RESONATORS**

| Ranges Tested: | | | |
|---|---|---|---|
| **Mode** | **Freq** | **C1** | **C2** |
| XT | 455 kHz<br>2.0 MHz<br>4.0 MHz | 68 - 100 pF<br>15 - 68 pF<br>15 - 68 pF | 68 - 100 pF<br>15 - 68 pF<br>15 - 68 pF |
| HS | 8.0 MHz<br>16.0 MHz | 10 - 68 pF<br>10 - 22 pF | 10 - 68 pF<br>10 - 22 pF |
| **These values are for design guidance only.** See notes following this table. | | | |
| **Resonators Used:** | | | |
| 455 kHz | Panasonic EFO-A455K04B | | ± 0.3% |
| 2.0 MHz | Murata Erie CSA2.00MG | | ± 0.5% |
| 4.0 MHz | Murata Erie CSA4.00MG | | ± 0.5% |
| 8.0 MHz | Murata Erie CSA8.00MT | | ± 0.5% |
| 16.0 MHz | Murata Erie CSA16.00MX | | ± 0.5% |
| All resonators used did not have built-in capacitors. | | | |

**Note 1:** Higher capacitance increases the stability of the oscillator, but also increases the start-up time.

**2:** When operating below 3V VDD, or when using certain ceramic resonators at any voltage, it may be necessary to use high-gain HS mode, try a lower frequency resonator, or switch to a crystal oscillator.

**3:** Since each resonator/crystal has its own characteristics, the user should consult the resonator/crystal manufacturer for appropriate values of external components, or verify oscillator performance.

**TABLE 2-2: CAPACITOR SELECTION FOR CRYSTAL OSCILLATOR**

| Ranges Tested: | | | |
|---|---|---|---|
| **Mode** | **Freq** | **C1** | **C2** |
| LP | 32.0 kHz | 33 pF | 33 pF |
| | 200 kHz | 15 pF | 15 pF |
| XT | 200 kHz | 22-68 pF | 22-68 pF |
| | 1.0 MHz | 15 pF | 15 pF |
| | 4.0 MHz | 15 pF | 15 pF |
| HS | 4.0 MHz | 15 pF | 15 pF |
| | 8.0 MHz | 15-33 pF | 15-33 pF |
| | 20.0 MHz | 15-33 pF | 15-33 pF |
| | 25.0 MHz | 15-33 pF | 15-33 pF |
| **These values are for design guidance only.** See notes following this table. | | | |
| **Crystals Used** | | | |
| 32.0 kHz | Epson C-001R32.768K-A | ± 20 PPM | |
| 200 kHz | STD XTL 200.000KHz | ± 20 PPM | |
| 1.0 MHz | ECS ECS-10-13-1 | ± 50 PPM | |
| 4.0 MHz | ECS ECS-40-20-1 | ± 50 PPM | |
| 8.0 MHz | Epson CA-301 8.000M-C | ± 30 PPM | |
| 20.0 MHz | Epson CA-301 20.000M-C | ± 30 PPM | |

**Note 1:** Higher capacitance increases the stability of the oscillator, but also increases the start-up time.

**2:** Rs may be required in HS mode, as well as XT mode, to avoid overdriving crystals with low drive level specification.

**3:** Since each resonator/crystal has its own characteristics, the user should consult the resonator/crystal manufacturer for appropriate values of external components., or verify oscillator performance.

An external clock source may also be connected to the OSC1 pin in the HS, XT and LP modes, as shown in Figure 2-2.

**FIGURE 2-2: EXTERNAL CLOCK INPUT OPERATION (HS, XT OR LP OSC CONFIGURATION)**

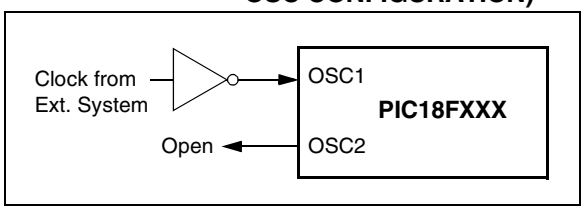


## 2.3 RC Oscillator

For timing-insensitive applications, the “RC” and “RCIO” device options offer additional cost savings. The RC oscillator frequency is a function of the supply voltage, the resistor (REXT) and capacitor (CEXT) values and the operating temperature. In addition to this, the oscillator frequency will vary from unit to unit due to normal process parameter variation. Furthermore, the difference in lead frame capacitance between package types will also affect the oscillation frequency, especially for low CEXT values. The user also needs to take into account variation due to tolerance of external R and C components used. Figure 2-3 shows how the R/C combination is connected.

In the RC Oscillator mode, the oscillator frequency divided by 4 is available on the OSC2 pin. This signal may be used for test purposes or to synchronize other logic.

**Note:** If the oscillator frequency divided by 4 signal is not required in the application, it is recommended to use RCIO mode to save current.

**FIGURE 2-3: RC OSCILLATOR MODE**

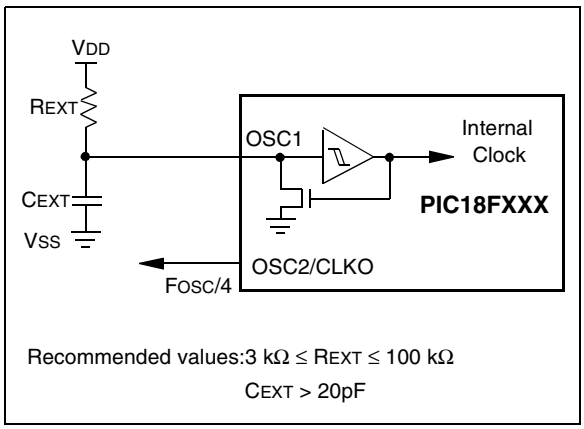


The RCIO Oscillator mode functions like the RC mode, except that the OSC2 pin becomes an additional general purpose I/O pin. The I/O pin becomes bit 6 of PORTA (RA6).


© 2006 Microchip Technology Inc.

## 2.4 External Clock Input

The EC and ECIO Oscillator modes require an external clock source to be connected to the OSC1 pin. The feedback device between OSC1 and OSC2 is turned off in these modes to save current. There is no oscillator start-up time required after a Power-on Reset or after a recovery from SLEEP mode.

In the EC Oscillator mode, the oscillator frequency divided by 4 is available on the OSC2 pin. This signal may be used for test purposes or to synchronize other logic. Figure 2-4 shows the pin connections for the EC Oscillator mode.

**FIGURE 2-4: EXTERNAL CLOCK INPUT OPERATION (EC CONFIGURATION)**

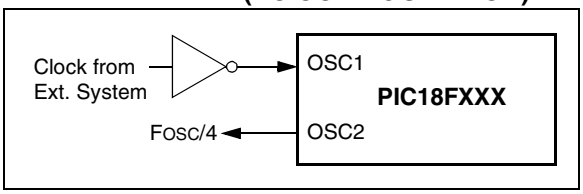


The ECIO Oscillator mode functions like the EC mode, except that the OSC2 pin becomes an additional general purpose I/O pin. The I/O pin becomes bit 6 of PORTA (RA6). Figure 2-5 shows the pin connections for the ECIO Oscillator mode.

**FIGURE 2-5: EXTERNAL CLOCK INPUT OPERATION (ECIO CONFIGURATION)**

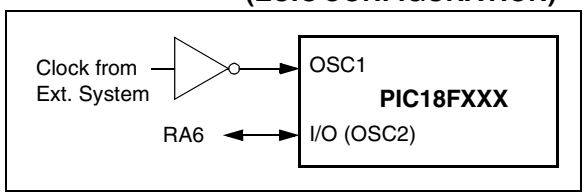


## 2.5 HS/PLL

A Phase Locked Loop circuit is provided as a programmable option for users that want to multiply the frequency of the incoming crystal oscillator signal by 4. For an input clock frequency of 10 MHz, the internal clock frequency will be multiplied to 40 MHz. This is useful for customers who are concerned with EMI due to high frequency crystals.

The PLL can only be enabled when the oscillator configuration bits are programmed for HS mode. If they are programmed for any other mode, the PLL is not enabled and the system clock will come directly from OSC1.

The PLL is one of the modes of the FOSC<2:0> configuration bits. The Oscillator mode is specified during device programming.

A PLL lock timer is used to ensure that the PLL has locked before device execution starts. The PLL lock timer has a time-out that is called TPLL.

**FIGURE 2-6: PLL BLOCK DIAGRAM**

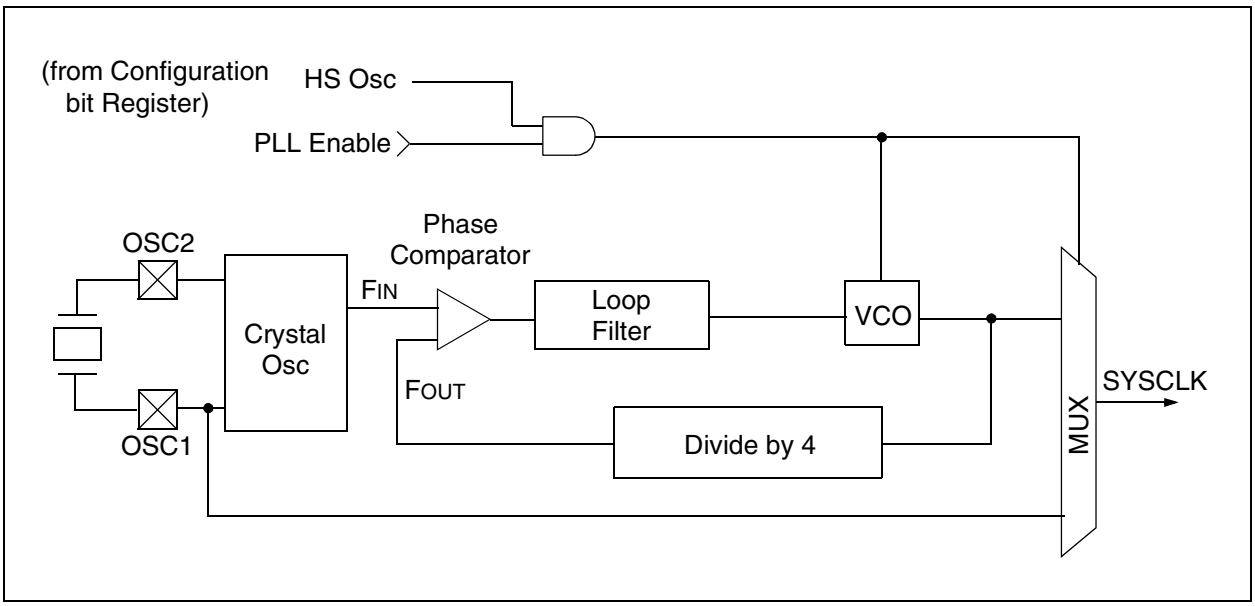

## 2.6 Oscillator Switching Feature

The PIC18FXX2 devices include a feature that allows the system clock source to be switched from the main oscillator to an alternate low frequency clock source. For the PIC18FXX2 devices, this alternate clock source is the Timer1 oscillator. If a low frequency crystal (32 kHz, for example) has been attached to the Timer1 oscillator pins and the Timer1 oscillator has been enabled, the device can switch to a Low Power Execution mode. Figure 2-7 shows a block diagram of the system clock sources. The clock switching feature is enabled by programming the Oscillator Switching Enable (OSCSEN) bit in Configuration Register1H to a '0'. Clock switching is disabled in an erased device. See Section 11.0 for further details of the Timer1 oscillator. See Section 19.0 for Configuration Register details.

**FIGURE 2-7: DEVICE CLOCK SOURCES**

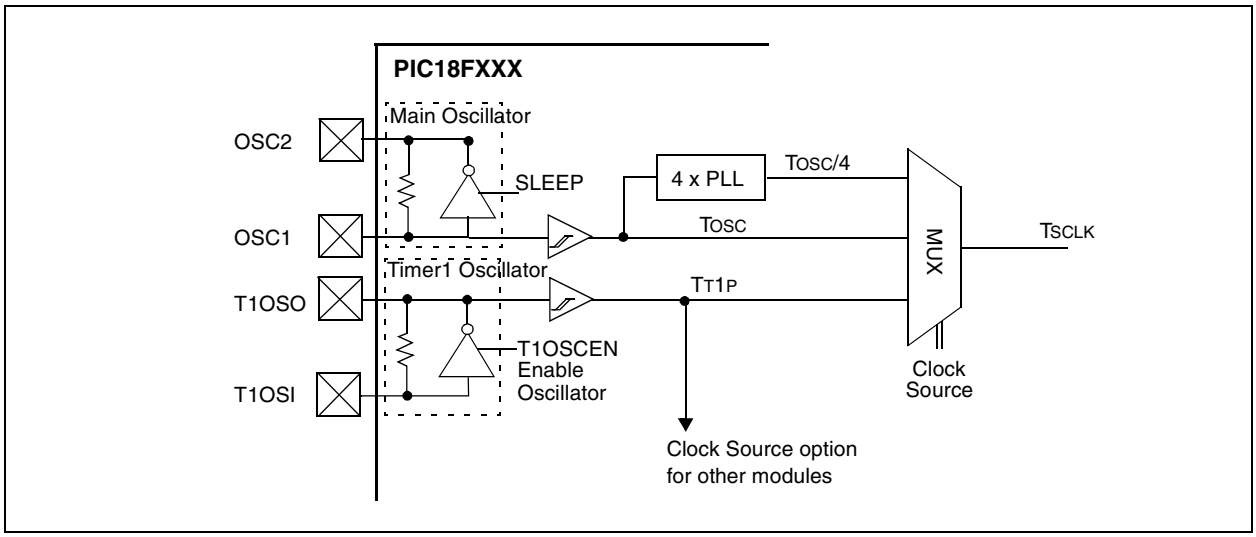



© 2006 Microchip Technology Inc.

### 2.6.1 SYSTEM CLOCK SWITCH BIT

The system clock source switching is performed under software control. The system clock switch bit, SCS (OSCCON<0>) controls the clock switching. When the SCS bit is ’0’, the system clock source comes from the main oscillator that is selected by the FOSC configuration bits in Configuration Register1H. When the SCS bit is set, the system clock source will come from the Timer1 oscillator. The SCS bit is cleared on all forms of RESET.

| **Note:** | The Timer1 oscillator must be enabled and operating to switch the system clock source. The Timer1 oscillator is enabled by setting the T1OSCEN bit in the Timer1 control register (T1CON). If the Timer1 oscillator is not enabled, then any write to the SCS bit will be ignored (SCS bit forced cleared) and the main oscillator will continue to be the system clock source. |
|---|---|

**REGISTER 2-1: OSCCON REGISTER**

| U-0 | U-0 | U-0 | U-0 | U-0 | U-0 | U-0 | R/W-1 |
|---|---|---|---|---|---|---|---|
| — | — | — | — | — | — | — | SCS |
| bit 7 | | | | | | | bit 0 |

bit 7-1 **Unimplemented:** Read as '0'

bit 0 **SCS:** System Clock Switch bit

When $\overline{\text{OSCSEN}}$ configuration bit = ’0’ and T1OSCEN bit is set:

1 = Switch to Timer1 oscillator/clock pin

0 = Use primary oscillator/clock input pin

When $\overline{\text{OSCSEN}}$ and T1OSCEN are in other states:

bit is forced clear

| Legend: | | | |
|---|---|---|---|
| R = Readable bit | W = Writable bit | U = Unimplemented bit, read as ‘0’ | |
| - n = Value at POR | ’1’ = Bit is set | ’0’ = Bit is cleared | x = Bit is unknown |

### 2.6.2 OSCILLATOR TRANSITIONS

The PIC18FXX2 devices contain circuitry to prevent "glitches" when switching between oscillator sources. Essentially, the circuitry waits for eight rising edges of the clock source that the processor is switching to. This ensures that the new clock source is stable and that its pulse width will not be less than the shortest pulse width of the two clock sources.

A timing diagram indicating the transition from the main oscillator to the Timer1 oscillator is shown in Figure 2-8. The Timer1 oscillator is assumed to be running all the time. After the SCS bit is set, the processor is frozen at the next occurring Q1 cycle. After eight synchronization cycles are counted from the Timer1 oscillator, operation resumes. No additional delays are required after the synchronization cycles.

**FIGURE 2-8: TIMING DIAGRAM FOR TRANSITION FROM OSC1 TO TIMER1 OSCILLATOR**

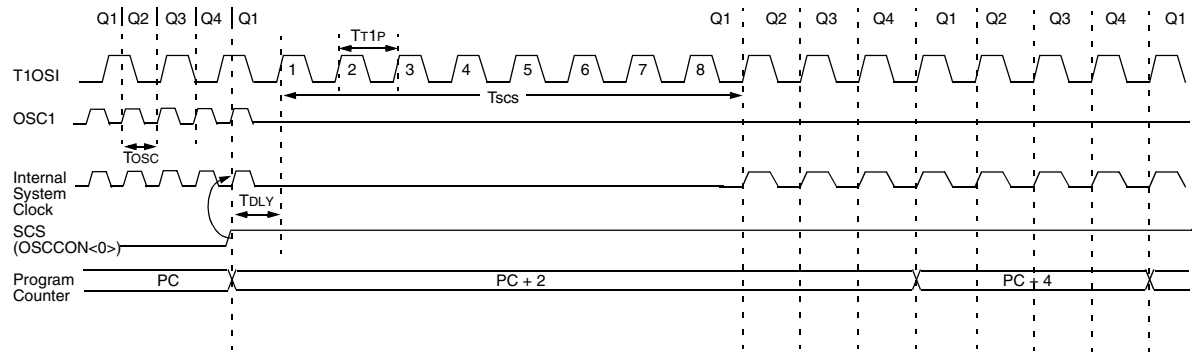


**Note 1:** Delay on internal system clock is eight oscillator cycles for synchronization.

The sequence of events that takes place when switching from the Timer1 oscillator to the main oscillator will depend on the mode of the main oscillator. In addition to eight clock cycles of the main oscillator, additional delays may take place.

If the main oscillator is configured for an external crystal (HS, XT, LP), then the transition will take place after an oscillator start-up time (TOST) has occurred. A timing diagram, indicating the transition from the Timer1 oscillator to the main oscillator for HS, XT and LP modes, is shown in Figure 2-9.

**FIGURE 2-9: TIMING FOR TRANSITION BETWEEN TIMER1 AND OSC1 (HS, XT, LP)**

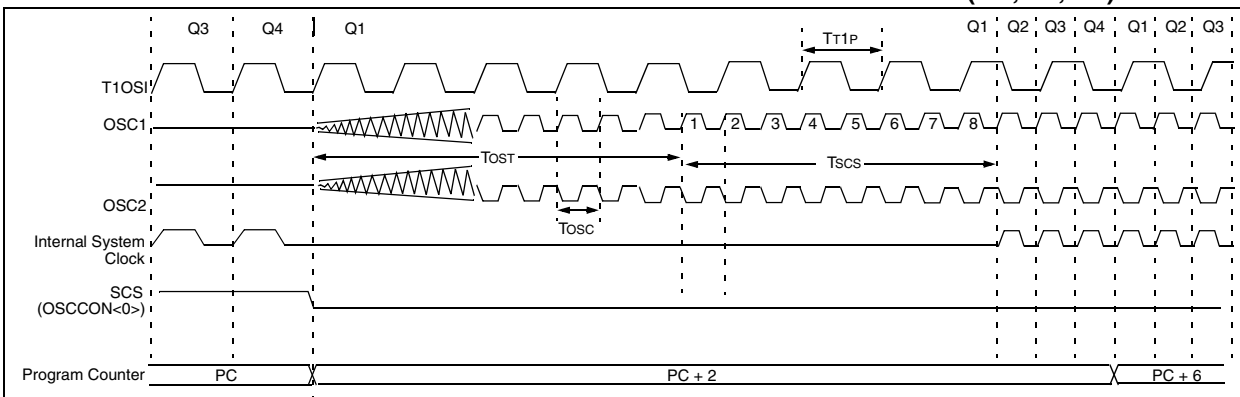


**Note 1:** TOST = 1024 TOSC (drawing not to scale).


© 2006 Microchip Technology Inc.

If the main oscillator is configured for HS-PLL mode, an oscillator start-up time (TOST) plus an additional PLL time-out (TPLL) will occur. The PLL time-out is typically 2 ms and allows the PLL to lock to the main oscillator frequency. A timing diagram indicating the transition from the Timer1 oscillator to the main oscillator for HS-PLL mode is shown in Figure 2-10.

**FIGURE 2-10: TIMING FOR TRANSITION BETWEEN TIMER1 AND OSC1 (HS WITH PLL)**

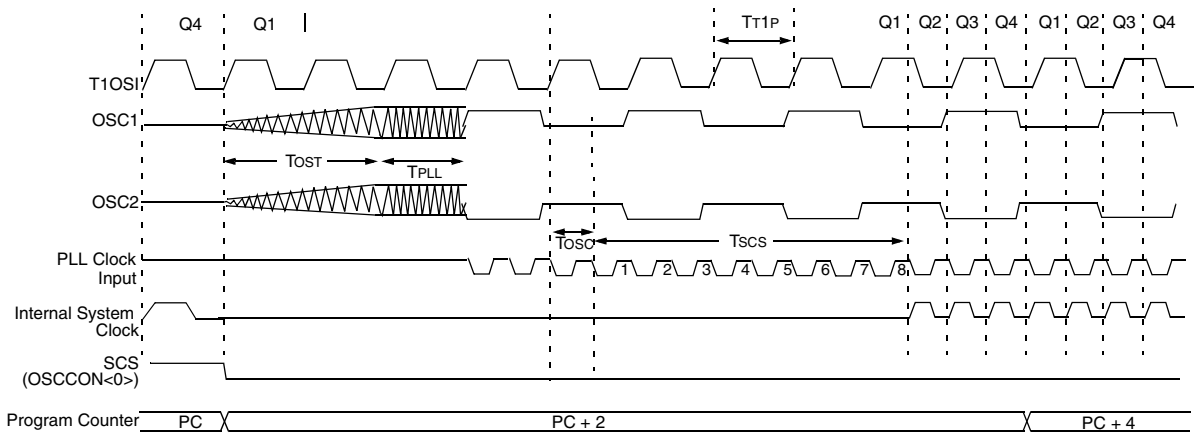


**Note 1:** TOST = 1024 TOSC (drawing not to scale).

If the main oscillator is configured in the RC, RCIO, EC or ECIO modes, there is no oscillator start-up time-out. Operation will resume after eight cycles of the main oscillator have been counted. A timing diagram, indicating the transition from the Timer1 oscillator to the main oscillator for RC, RCIO, EC and ECIO modes, is shown in Figure 2-11.

**FIGURE 2-11: TIMING FOR TRANSITION BETWEEN TIMER1 AND OSC1 (RC, EC)**

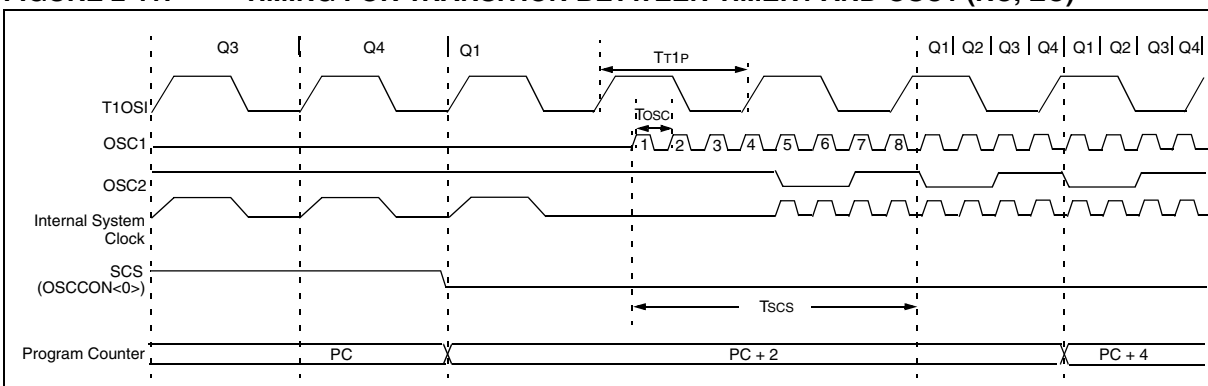


**Note 1:** RC Oscillator mode assumed.

## 2.7 Effects of SLEEP Mode on the On-Chip Oscillator

When the device executes a `SLEEP` instruction, the on-chip clocks and oscillator are turned off and the device is held at the beginning of an instruction cycle (Q1 state). With the oscillator off, the OSC1 and OSC2 signals will stop oscillating. Since all the transistor switching currents have been removed, SLEEP mode achieves the lowest current consumption of the device (only leakage currents). Enabling any on-chip feature that will operate during SLEEP will increase the current consumed during SLEEP. The user can wake from SLEEP through external RESET, Watchdog Timer Reset, or through an interrupt.

**TABLE 2-3: OSC1 AND OSC2 PIN STATES IN SLEEP MODE**

| OSC Mode | OSC1 Pin | OSC2 Pin |
|---|---|---|
| RC | Floating, external resistor should pull high | At logic low |
| RCIO | Floating, external resistor should pull high | Configured as PORTA, bit 6 |
| ECIO | Floating | Configured as PORTA, bit 6 |
| EC | Floating | At logic low |
| LP, XT, and HS | Feedback inverter disabled, at quiescent voltage level | Feedback inverter disabled, at quiescent voltage level |

**Note:** See Table 3-1, in the **"Reset"** section, for time-outs due to SLEEP and $\overline{\text{MCLR}}$ Reset.

## 2.8 Power-up Delays

Power up delays are controlled by two timers, so that no external RESET circuitry is required for most applications. The delays ensure that the device is kept in RESET, until the device power supply and clock are stable. For additional information on RESET operation, see Section 3.0.

The first timer is the Power-up Timer (PWRT), which optionally provides a fixed delay of 72 ms (nominal) on power-up only (POR and BOR). The second timer is the Oscillator Start-up Timer (OST), intended to keep the chip in RESET until the crystal oscillator is stable.

With the PLL enabled (HS/PLL Oscillator mode), the time-out sequence following a Power-on Reset is different from other Oscillator modes. The time-out sequence is as follows: First, the PWRT time-out is invoked after a POR time delay has expired. Then, the Oscillator Start-up Timer (OST) is invoked. However, this is still not a sufficient amount of time to allow the PLL to lock at high frequencies. The PWRT timer is used to provide an additional fixed 2 ms (nominal) time-out to allow the PLL ample time to lock to the incoming clock frequency.


© 2006 Microchip Technology Inc.

## 3.0 RESET

The PIC18FXXX differentiates between various kinds of RESET:

a) Power-on Reset (POR)
b) $\overline{\text{MCLR}}$ Reset during normal operation
c) $\overline{\text{MCLR}}$ Reset during SLEEP
d) Watchdog Timer (WDT) Reset (during normal operation)
e) Programmable Brown-out Reset (BOR)
f) `RESET` Instruction
g) Stack Full Reset
h) Stack Underflow Reset

Most registers are unaffected by a RESET. Their status is unknown on POR and unchanged by all other RESETS. The other registers are forced to a "RESET state" on Power-on Reset, $\overline{\text{MCLR}}$, WDT Reset, Brown-out Reset, $\overline{\text{MCLR}}$ Reset during SLEEP and by the `RESET` instruction.

Most registers are not affected by a WDT wake-up, since this is viewed as the resumption of normal operation. Status bits from the RCON register, $\overline{\text{RI}}$, $\overline{\text{TO}}$, $\overline{\text{PD}}$, $\overline{\text{POR}}$ and $\overline{\text{BOR}}$, are set or cleared differently in different RESET situations, as indicated in Table 3-2. These bits are used in software to determine the nature of the RESET. See Table 3-3 for a full description of the RESET states of all registers.

A simplified block diagram of the On-Chip Reset Circuit is shown in Figure 3-1.

The Enhanced MCU devices have a $\overline{\text{MCLR}}$ noise filter in the $\overline{\text{MCLR}}$ Reset path. The filter will detect and ignore small pulses.

The $\overline{\text{MCLR}}$ pin is not driven low by any internal RESETS, including the WDT.

**FIGURE 3-1: SIMPLIFIED BLOCK DIAGRAM OF ON-CHIP RESET CIRCUIT**

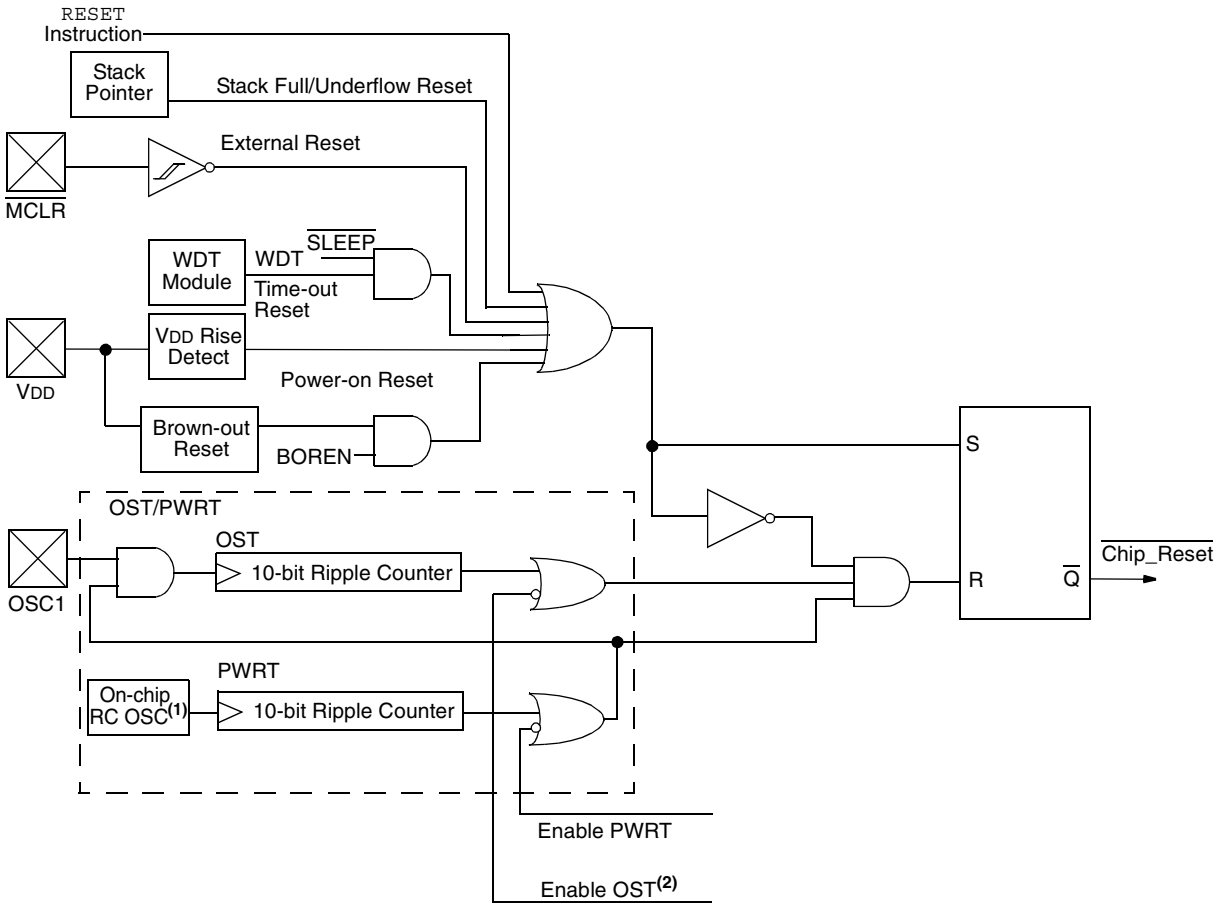


**Note 1:** This is a separate oscillator from the RC oscillator of the CLKI pin.

**2:** See Table 3-1 for time-out situations.

## 3.1 Power-On Reset (POR)

A Power-on Reset pulse is generated on-chip when VDD rise is detected. To take advantage of the POR circuitry, just tie the MCLR pin directly (or through a resistor) to VDD. This will eliminate external RC components usually needed to create a Power-on Reset delay. A minimum rise rate for VDD is specified (parameter D004). For a slow rise time, see Figure 3-2.

When the device starts normal operation (i.e., exits the RESET condition), device operating parameters (voltage, frequency, temperature, etc.) must be met to ensure operation. If these conditions are not met, the device must be held in RESET until the operating conditions are met.

**FIGURE 3-2: EXTERNAL POWER-ON RESET CIRCUIT (FOR SLOW VDD POWER-UP)**

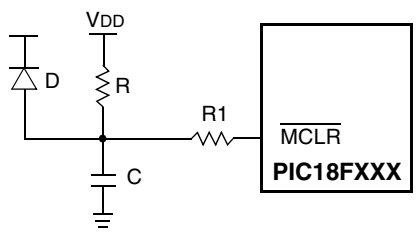


**Note 1:** External Power-on Reset circuit is required only if the VDD power-up slope is too slow. The diode D helps discharge the capacitor quickly when VDD powers down.

**2:** R < 40 kΩ is recommended to make sure that the voltage drop across R does not violate the device's electrical specification.

**3:** R1 = 100Ω to 1 kΩ will limit any current flowing into MCLR from external capacitor C, in the event of MCLR/VPP pin breakdown due to Electrostatic Discharge (ESD) or Electrical Overstress (EOS).

## 3.2 Power-up Timer (PWRT)

The Power-up Timer provides a fixed nominal time-out (parameter 33) only on power-up from the POR. The Power-up Timer operates on an internal RC oscillator. The chip is kept in RESET as long as the PWRT is active. The PWRT's time delay allows VDD to rise to an acceptable level. A configuration bit is provided to enable/disable the PWRT.

The power-up time delay will vary from chip-to-chip due to VDD, temperature and process variation. See DC parameter D033 for details.

## 3.3 Oscillator Start-up Timer (OST)

The Oscillator Start-up Timer (OST) provides a 1024 oscillator cycle (from OSC1 input) delay after the PWRT delay is over (parameter 32). This ensures that the crystal oscillator or resonator has started and stabilized.

The OST time-out is invoked only for XT, LP and HS modes and only on Power-on Reset or wake-up from SLEEP.

## 3.4 PLL Lock Time-out

With the PLL enabled, the time-out sequence following a Power-on Reset is different from other Oscillator modes. A portion of the Power-up Timer is used to provide a fixed time-out that is sufficient for the PLL to lock to the main oscillator frequency. This PLL lock time-out (TPLL) is typically 2 ms and follows the oscillator start-up time-out (OST).

## 3.5 Brown-out Reset (BOR)

A configuration bit, BOREN, can disable (if clear/programmed), or enable (if set) the Brown-out Reset circuitry. If VDD falls below parameter D005 for greater than parameter 35, the brown-out situation will reset the chip. A RESET may not occur if VDD falls below parameter D005 for less than parameter 35. The chip will remain in Brown-out Reset until VDD rises above BVDD. If the Power-up Timer is enabled, it will be invoked after VDD rises above BVDD; it then will keep the chip in RESET for an additional time delay (parameter 33). If VDD drops below BVDD while the Power-up Timer is running, the chip will go back into a Brown-out Reset and the Power-up Timer will be initialized. Once VDD rises above BVDD, the Power-up Timer will execute the additional time delay.

## 3.6 Time-out Sequence

On power-up, the time-out sequence is as follows: First, PWRT time-out is invoked after the POR time delay has expired. Then, OST is activated. The total time-out will vary based on oscillator configuration and the status of the PWRT. For example, in RC mode with the PWRT disabled, there will be no time-out at all. Figure 3-3, Figure 3-4, Figure 3-5, Figure 3-6 and Figure 3-7 depict time-out sequences on power-up.

Since the time-outs occur from the POR pulse, if MCLR is kept low long enough, the time-outs will expire. Bringing MCLR high will begin execution immediately (Figure 3-5). This is useful for testing purposes or to synchronize more than one PIC18FXXX device operating in parallel.

Table 3-2 shows the RESET conditions for some Special Function Registers, while Table 3-3 shows the RESET conditions for all the registers.


© 2006 Microchip Technology Inc.

**TABLE 3-1: TIME-OUT IN VARIOUS SITUATIONS**

| Oscillator Configuration | Power-up[2] | | Brown-out | Wake-up from SLEEP or Oscillator Switch |
|---|---|---|---|---|
| | $\overline{\text{PWRTE}}$ = 0 | $\overline{\text{PWRTE}}$ = 1 | | |
| HS with PLL enabled[1] | 72 ms + 1024 TOSC + 2ms | 1024 TOSC + 2 ms | 72 ms[2] + 1024 TOSC + 2 ms | 1024 TOSC + 2 ms |
| HS, XT, LP | 72 ms + 1024 TOSC | 1024 TOSC | 72 ms[2] + 1024 TOSC | 1024 TOSC |
| EC | 72 ms | — | 72 ms[2] | — |
| External RC | 72 ms | — | 72 ms[2] | — |

**Note 1:** 2 ms is the nominal time required for the 4x PLL to lock.
**2:** 72 ms is the nominal power-up timer delay, if implemented.

**REGISTER 3-1: RCON REGISTER BITS AND POSITIONS**

| R/W-0 | U-0 | U-0 | R/W-1 | R-1 | R-1 | R/W-0 | R/W-0 |
|---|---|---|---|---|---|---|---|
| IPEN | — | — | $\overline{\text{RI}}$ | $\overline{\text{TO}}$ | $\overline{\text{PD}}$ | $\overline{\text{POR}}$ | $\overline{\text{BOR}}$ |
| bit 7 | | | | | | | bit 0 |

**Note 1:** Refer to Section 4.14 (page 53) for bit definitions.

**TABLE 3-2: STATUS BITS, THEIR SIGNIFICANCE AND THE INITIALIZATION CONDITION FOR RCON REGISTER**

| Condition | Program Counter | RCON Register | $\overline{\text{RI}}$ | $\overline{\text{TO}}$ | $\overline{\text{PD}}$ | $\overline{\text{POR}}$ | $\overline{\text{BOR}}$ | STKFUL | STKUNF |
|---|---|---|---|---|---|---|---|---|---|
| Power-on Reset | 0000h | 0--1 1100 | 1 | 1 | 1 | 0 | 0 | u | u |
| $\overline{\text{MCLR}}$ Reset during normal operation | 0000h | 0--u uuuu | u | u | u | u | u | u | u |
| Software Reset during normal operation | 0000h | 0--0 uuuu | 0 | u | u | u | u | u | u |
| Stack Full Reset during normal operation | 0000h | 0--u uu11 | u | u | u | u | u | u | 1 |
| Stack Underflow Reset during normal operation | 0000h | 0--u uu11 | u | u | u | u | u | 1 | u |
| $\overline{\text{MCLR}}$ Reset during SLEEP | 0000h | 0--u 10uu | u | 1 | 0 | u | u | u | u |
| WDT Reset | 0000h | 0--u 01uu | 1 | 0 | 1 | u | u | u | u |
| WDT Wake-up | PC + 2 | u--u 00uu | u | 0 | 0 | u | u | u | u |
| Brown-out Reset | 0000h | 0--1 11u0 | 1 | 1 | 1 | 1 | 0 | u | u |
| Interrupt wake-up from SLEEP | PC + 2[1] | u--u 00uu | u | 1 | 0 | u | u | u | u |

Legend: u = unchanged, x = unknown, - = unimplemented bit, read as '0'

**Note 1:** When the wake-up is due to an interrupt and the GIEH or GIEL bits are set, the PC is loaded with the interrupt vector (0x000008h or 0x000018h).

**TABLE 3-3: INITIALIZATION CONDITIONS FOR ALL REGISTERS**

| Register | Applicable Devices | | | | Power-on Reset, Brown-out Reset | $\overline{\text{MCLR}}$ Resets WDT Reset RESET Instruction Stack Resets | Wake-up via WDT or Interrupt |
|---|---|---|---|---|---|---|---|
| TOSU | 242 | 442 | 252 | 452 | ---0 0000 | ---0 0000 | ---0 uuuu(3) |
| TOSH | 242 | 442 | 252 | 452 | 0000 0000 | 0000 0000 | uuuu uuuu(3) |
| TOSL | 242 | 442 | 252 | 452 | 0000 0000 | 0000 0000 | uuuu uuuu(3) |
| STKPTR | 242 | 442 | 252 | 452 | 00-0 0000 | uu-0 0000 | uu-u uuuu(3) |
| PCLATU | 242 | 442 | 252 | 452 | ---0 0000 | ---0 0000 | ---u uuuu |
| PCLATH | 242 | 442 | 252 | 452 | 0000 0000 | 0000 0000 | uuuu uuuu |
| PCL | 242 | 442 | 252 | 452 | 0000 0000 | 0000 0000 | PC + 2(2) |
| TBLPTRU | 242 | 442 | 252 | 452 | --00 0000 | --00 0000 | --uu uuuu |
| TBLPTRH | 242 | 442 | 252 | 452 | 0000 0000 | 0000 0000 | uuuu uuuu |
| TBLPTRL | 242 | 442 | 252 | 452 | 0000 0000 | 0000 0000 | uuuu uuuu |
| TABLAT | 242 | 442 | 252 | 452 | 0000 0000 | 0000 0000 | uuuu uuuu |
| PRODH | 242 | 442 | 252 | 452 | xxxx xxxx | uuuu uuuu | uuuu uuuu |
| PRODL | 242 | 442 | 252 | 452 | xxxx xxxx | uuuu uuuu | uuuu uuuu |
| INTCON | 242 | 442 | 252 | 452 | 0000 000x | 0000 000u | uuuu uuuu(1) |
| INTCON2 | 242 | 442 | 252 | 452 | 1111 -1-1 | 1111 -1-1 | uuuu -u-u(1) |
| INTCON3 | 242 | 442 | 252 | 452 | 11-0 0-00 | 11-0 0-00 | uu-u u-uu(1) |
| INDF0 | 242 | 442 | 252 | 452 | N/A | N/A | N/A |
| POSTINC0 | 242 | 442 | 252 | 452 | N/A | N/A | N/A |
| POSTDEC0 | 242 | 442 | 252 | 452 | N/A | N/A | N/A |
| PREINC0 | 242 | 442 | 252 | 452 | N/A | N/A | N/A |
| PLUSW0 | 242 | 442 | 252 | 452 | N/A | N/A | N/A |
| FSR0H | 242 | 442 | 252 | 452 | ---- xxxx | ---- uuuu | ---- uuuu |
| FSR0L | 242 | 442 | 252 | 452 | xxxx xxxx | uuuu uuuu | uuuu uuuu |
| WREG | 242 | 442 | 252 | 452 | xxxx xxxx | uuuu uuuu | uuuu uuuu |
| INDF1 | 242 | 442 | 252 | 452 | N/A | N/A | N/A |
| POSTINC1 | 242 | 442 | 252 | 452 | N/A | N/A | N/A |
| POSTDEC1 | 242 | 442 | 252 | 452 | N/A | N/A | N/A |
| PREINC1 | 242 | 442 | 252 | 452 | N/A | N/A | N/A |
| PLUSW1 | 242 | 442 | 252 | 452 | N/A | N/A | N/A |

Legend: u = unchanged, x = unknown, - = unimplemented bit, read as '0', q = value depends on condition.
Shaded cells indicate conditions do not apply for the designated device.

**Note 1:** One or more bits in the INTCONx or PIRx registers will be affected (to cause wake-up).
**2:** When the wake-up is due to an interrupt and the GIEL or GIEH bit is set, the PC is loaded with the interrupt vector (0008h or 0018h).
**3:** When the wake-up is due to an interrupt and the GIEL or GIEH bit is set, the TOSU, TOSH and TOSL are updated with the current value of the PC. The STKPTR is modified to point to the next location in the hardware stack.
**4:** See Table 3-2 for RESET value for specific condition.
**5:** Bit 6 of PORTA, LATA, and TRISA are enabled in ECIO and RCIO Oscillator modes only. In all other Oscillator modes, they are disabled and read ’0’.
**6:** Bit 6 of PORTA, LATA and TRISA are not available on all devices. When unimplemented, they are read ’0’.


© 2006 Microchip Technology Inc.

**TABLE 3-3: INITIALIZATION CONDITIONS FOR ALL REGISTERS (CONTINUED)**

| Register | Applicable Devices | | | | Power-on Reset, Brown-out Reset | $\overline{\text{MCLR}}$ Resets WDT Reset RESET Instruction Stack Resets | Wake-up via WDT or Interrupt |
|---|---|---|---|---|---|---|---|
| FSR1H | 242 | 442 | 252 | 452 | ---- xxxx | ---- uuuu | ---- uuuu |
| FSR1L | 242 | 442 | 252 | 452 | xxxx xxxx | uuuu uuuu | uuuu uuuu |
| BSR | 242 | 442 | 252 | 452 | ---- 0000 | ---- 0000 | ---- uuuu |
| INDF2 | 242 | 442 | 252 | 452 | N/A | N/A | N/A |
| POSTINC2 | 242 | 442 | 252 | 452 | N/A | N/A | N/A |
| POSTDEC2 | 242 | 442 | 252 | 452 | N/A | N/A | N/A |
| PREINC2 | 242 | 442 | 252 | 452 | N/A | N/A | N/A |
| PLUSW2 | 242 | 442 | 252 | 452 | N/A | N/A | N/A |
| FSR2H | 242 | 442 | 252 | 452 | ---- xxxx | ---- uuuu | ---- uuuu |
| FSR2L | 242 | 442 | 252 | 452 | xxxx xxxx | uuuu uuuu | uuuu uuuu |
| STATUS | 242 | 442 | 252 | 452 | ---x xxxx | ---u uuuu | ---u uuuu |
| TMR0H | 242 | 442 | 252 | 452 | 0000 0000 | uuuu uuuu | uuuu uuuu |
| TMR0L | 242 | 442 | 252 | 452 | xxxx xxxx | uuuu uuuu | uuuu uuuu |
| T0CON | 242 | 442 | 252 | 452 | 1111 1111 | 1111 1111 | uuuu uuuu |
| OSCCON | 242 | 442 | 252 | 452 | ---- ---0 | ---- ---0 | ---- ---u |
| LVDCON | 242 | 442 | 252 | 452 | --00 0101 | --00 0101 | --uu uuuu |
| WDTCON | 242 | 442 | 252 | 452 | ---- ---0 | ---- ---0 | ---- ---u |
| RCON(4) | 242 | 442 | 252 | 452 | 0--q 11qq | 0--q qquu | u--u qquu |
| TMR1H | 242 | 442 | 252 | 452 | xxxx xxxx | uuuu uuuu | uuuu uuuu |
| TMR1L | 242 | 442 | 252 | 452 | xxxx xxxx | uuuu uuuu | uuuu uuuu |
| T1CON | 242 | 442 | 252 | 452 | 0-00 0000 | u-uu uuuu | u-uu uuuu |
| TMR2 | 242 | 442 | 252 | 452 | 0000 0000 | 0000 0000 | uuuu uuuu |
| PR2 | 242 | 442 | 252 | 452 | 1111 1111 | 1111 1111 | 1111 1111 |
| T2CON | 242 | 442 | 252 | 452 | -000 0000 | -000 0000 | -uuu uuuu |
| SSPBUF | 242 | 442 | 252 | 452 | xxxx xxxx | uuuu uuuu | uuuu uuuu |
| SSPADD | 242 | 442 | 252 | 452 | 0000 0000 | 0000 0000 | uuuu uuuu |
| SSPSTAT | 242 | 442 | 252 | 452 | 0000 0000 | 0000 0000 | uuuu uuuu |
| SSPCON1 | 242 | 442 | 252 | 452 | 0000 0000 | 0000 0000 | uuuu uuuu |
| SSPCON2 | 242 | 442 | 252 | 452 | 0000 0000 | 0000 0000 | uuuu uuuu |

Legend: u = unchanged, x = unknown, - = unimplemented bit, read as '0', q = value depends on condition.
Shaded cells indicate conditions do not apply for the designated device.

**Note 1:** One or more bits in the INTCONx or PIRx registers will be affected (to cause wake-up).

**2:** When the wake-up is due to an interrupt and the GIEL or GIEH bit is set, the PC is loaded with the interrupt vector (0008h or 0018h).

**3:** When the wake-up is due to an interrupt and the GIEL or GIEH bit is set, the TOSU, TOSH and TOSL are updated with the current value of the PC. The STKPTR is modified to point to the next location in the hardware stack.

**4:** See Table 3-2 for RESET value for specific condition.

**5:** Bit 6 of PORTA, LATA, and TRISA are enabled in ECIO and RCIO Oscillator modes only. In all other Oscillator modes, they are disabled and read ’0’.

**6:** Bit 6 of PORTA, LATA and TRISA are not available on all devices. When unimplemented, they are read ’0’.

**TABLE 3-3: INITIALIZATION CONDITIONS FOR ALL REGISTERS (CONTINUED)**

| Register | Applicable Devices | | | | Power-on Reset, Brown-out Reset | $\overline{\text{MCLR}}$ Resets WDT Reset RESET Instruction Stack Resets | Wake-up via WDT or Interrupt |
|---|---|---|---|---|---|---|---|
| ADRESH | 242 | 442 | 252 | 452 | xxxx xxxx | uuuu uuuu | uuuu uuuu |
| ADRESL | 242 | 442 | 252 | 452 | xxxx xxxx | uuuu uuuu | uuuu uuuu |
| ADCON0 | 242 | 442 | 252 | 452 | 0000 00-0 | 0000 00-0 | uuuu uu-u |
| ADCON1 | 242 | 442 | 252 | 452 | 00-- 0000 | 00-- 0000 | uu-- uuuu |
| CCPR1H | 242 | 442 | 252 | 452 | xxxx xxxx | uuuu uuuu | uuuu uuuu |
| CCPR1L | 242 | 442 | 252 | 452 | xxxx xxxx | uuuu uuuu | uuuu uuuu |
| CCP1CON | 242 | 442 | 252 | 452 | --00 0000 | --00 0000 | --uu uuuu |
| CCPR2H | 242 | 442 | 252 | 452 | xxxx xxxx | uuuu uuuu | uuuu uuuu |
| CCPR2L | 242 | 442 | 252 | 452 | xxxx xxxx | uuuu uuuu | uuuu uuuu |
| CCP2CON | 242 | 442 | 252 | 452 | --00 0000 | --00 0000 | --uu uuuu |
| TMR3H | 242 | 442 | 252 | 452 | xxxx xxxx | uuuu uuuu | uuuu uuuu |
| TMR3L | 242 | 442 | 252 | 452 | xxxx xxxx | uuuu uuuu | uuuu uuuu |
| T3CON | 242 | 442 | 252 | 452 | 0000 0000 | uuuu uuuu | uuuu uuuu |
| SPBRG | 242 | 442 | 252 | 452 | 0000 0000 | 0000 0000 | uuuu uuuu |
| RCREG | 242 | 442 | 252 | 452 | 0000 0000 | 0000 0000 | uuuu uuuu |
| TXREG | 242 | 442 | 252 | 452 | 0000 0000 | 0000 0000 | uuuu uuuu |
| TXSTA | 242 | 442 | 252 | 452 | 0000 -010 | 0000 -010 | uuuu -uuu |
| RCSTA | 242 | 442 | 252 | 452 | 0000 000x | 0000 000x | uuuu uuuu |
| EEADR | 242 | 442 | 252 | 452 | 0000 0000 | 0000 0000 | uuuu uuuu |
| EEDATA | 242 | 442 | 252 | 452 | 0000 0000 | 0000 0000 | uuuu uuuu |
| EECON1 | 242 | 442 | 252 | 452 | xx-0 x000 | uu-0 u000 | uu-0 u000 |
| EECON2 | 242 | 442 | 252 | 452 | ---- ---- | ---- ---- | ---- ---- |

Legend: u = unchanged, x = unknown, - = unimplemented bit, read as '0', q = value depends on condition.
Shaded cells indicate conditions do not apply for the designated device.

**Note 1:** One or more bits in the INTCONx or PIRx registers will be affected (to cause wake-up).

**2:** When the wake-up is due to an interrupt and the GIEL or GIEH bit is set, the PC is loaded with the interrupt vector (0008h or 0018h).

**3:** When the wake-up is due to an interrupt and the GIEL or GIEH bit is set, the TOSU, TOSH and TOSL are updated with the current value of the PC. The STKPTR is modified to point to the next location in the hardware stack.

**4:** See Table 3-2 for RESET value for specific condition.

**5:** Bit 6 of PORTA, LATA, and TRISA are enabled in ECIO and RCIO Oscillator modes only. In all other Oscillator modes, they are disabled and read ’0’.

**6:** Bit 6 of PORTA, LATA and TRISA are not available on all devices. When unimplemented, they are read ’0’.


© 2006 Microchip Technology Inc.

**TABLE 3-3: INITIALIZATION CONDITIONS FOR ALL REGISTERS (CONTINUED)**

| Register | Applicable Devices | | | | Power-on Reset, Brown-out Reset | $\overline{\text{MCLR}}$ Resets WDT Reset RESET Instruction Stack Resets | Wake-up via WDT or Interrupt |
|---|---|---|---|---|---|---|---|
| IPR2 | 242 | 442 | 252 | 452 | ---1 1111 | ---1 1111 | ---u uuuu |
| PIR2 | 242 | 442 | 252 | 452 | ---0 0000 | ---0 0000 | ---u uuuu(1) |
| PIE2 | 242 | 442 | 252 | 452 | ---0 0000 | ---0 0000 | ---u uuuu |
| IPR1 | 242 | 442 | 252 | 452 | 1111 1111 | 1111 1111 | uuuu uuuu |
| | 242 | 442 | 252 | 452 | -111 1111 | -111 1111 | -uuu uuuu |
| PIR1 | 242 | 442 | 252 | 452 | 0000 0000 | 0000 0000 | uuuu uuuu(1) |
| | 242 | 442 | 252 | 452 | -000 0000 | -000 0000 | -uuu uuuu(1) |
| PIE1 | 242 | 442 | 252 | 452 | 0000 0000 | 0000 0000 | uuuu uuuu |
| | 242 | 442 | 252 | 452 | -000 0000 | -000 0000 | -uuu uuuu |
| TRISE | 242 | 442 | 252 | 452 | 0000 -111 | 0000 -111 | uuuu -uuu |
| TRISD | 242 | 442 | 252 | 452 | 1111 1111 | 1111 1111 | uuuu uuuu |
| TRISC | 242 | 442 | 252 | 452 | 1111 1111 | 1111 1111 | uuuu uuuu |
| TRISB | 242 | 442 | 252 | 452 | 1111 1111 | 1111 1111 | uuuu uuuu |
| TRISA(5,6) | 242 | 442 | 252 | 452 | -111 1111(5) | -111 1111(5) | -uuu uuuu(5) |
| LATE | 242 | 442 | 252 | 452 | ---- -xxx | ---- -uuu | ---- -uuu |
| LATD | 242 | 442 | 252 | 452 | xxxx xxxx | uuuu uuuu | uuuu uuuu |
| LATC | 242 | 442 | 252 | 452 | xxxx xxxx | uuuu uuuu | uuuu uuuu |
| LATB | 242 | 442 | 252 | 452 | xxxx xxxx | uuuu uuuu | uuuu uuuu |
| LATA(5,6) | 242 | 442 | 252 | 452 | -xxx xxxx(5) | -uuu uuuu(5) | -uuu uuuu(5) |
| PORTE | 242 | 442 | 252 | 452 | ---- -000 | ---- -000 | ---- -uuu |
| PORTD | 242 | 442 | 252 | 452 | xxxx xxxx | uuuu uuuu | uuuu uuuu |
| PORTC | 242 | 442 | 252 | 452 | xxxx xxxx | uuuu uuuu | uuuu uuuu |
| PORTB | 242 | 442 | 252 | 452 | xxxx xxxx | uuuu uuuu | uuuu uuuu |
| PORTA(5,6) | 242 | 442 | 252 | 452 | -x0x 0000(5) | -u0u 0000(5) | -uuu uuuu(5) |

Legend: u = unchanged, x = unknown, - = unimplemented bit, read as '0', q = value depends on condition.
Shaded cells indicate conditions do not apply for the designated device.

**Note 1:** One or more bits in the INTCONx or PIRx registers will be affected (to cause wake-up).
**2:** When the wake-up is due to an interrupt and the GIEL or GIEH bit is set, the PC is loaded with the interrupt vector (0008h or 0018h).
**3:** When the wake-up is due to an interrupt and the GIEL or GIEH bit is set, the TOSU, TOSH and TOSL are updated with the current value of the PC. The STKPTR is modified to point to the next location in the hardware stack.
**4:** See Table 3-2 for RESET value for specific condition.
**5:** Bit 6 of PORTA, LATA, and TRISA are enabled in ECIO and RCIO Oscillator modes only. In all other Oscillator modes, they are disabled and read ’0’.
**6:** Bit 6 of PORTA, LATA and TRISA are not available on all devices. When unimplemented, they are read ’0’.

**FIGURE 3-3: TIME-OUT SEQUENCE ON POWER-UP ($\overline{\text{MCLR}}$ TIED TO $V_{DD}$)**

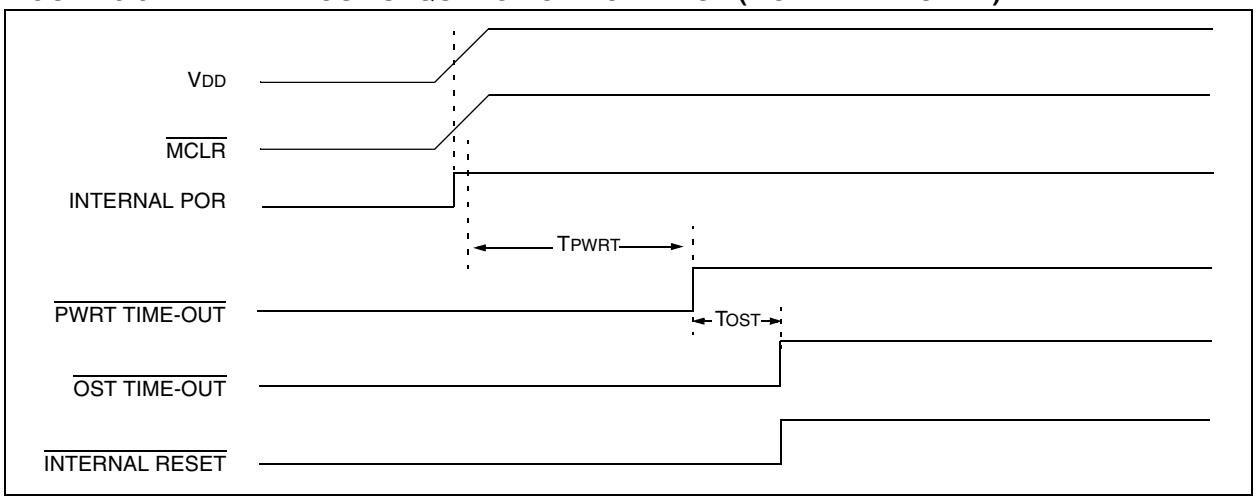


**FIGURE 3-4: TIME-OUT SEQUENCE ON POWER-UP ($\overline{\text{MCLR}}$ NOT TIED TO $V_{DD}$): CASE 1**

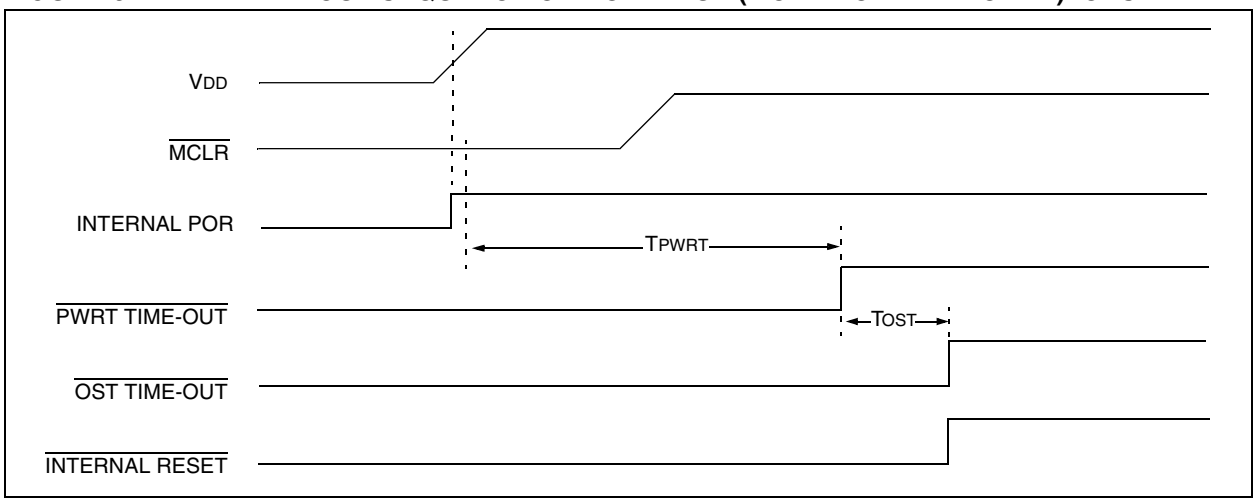


**FIGURE 3-5: TIME-OUT SEQUENCE ON POWER-UP ($\overline{\text{MCLR}}$ NOT TIED TO $V_{DD}$): CASE 2**

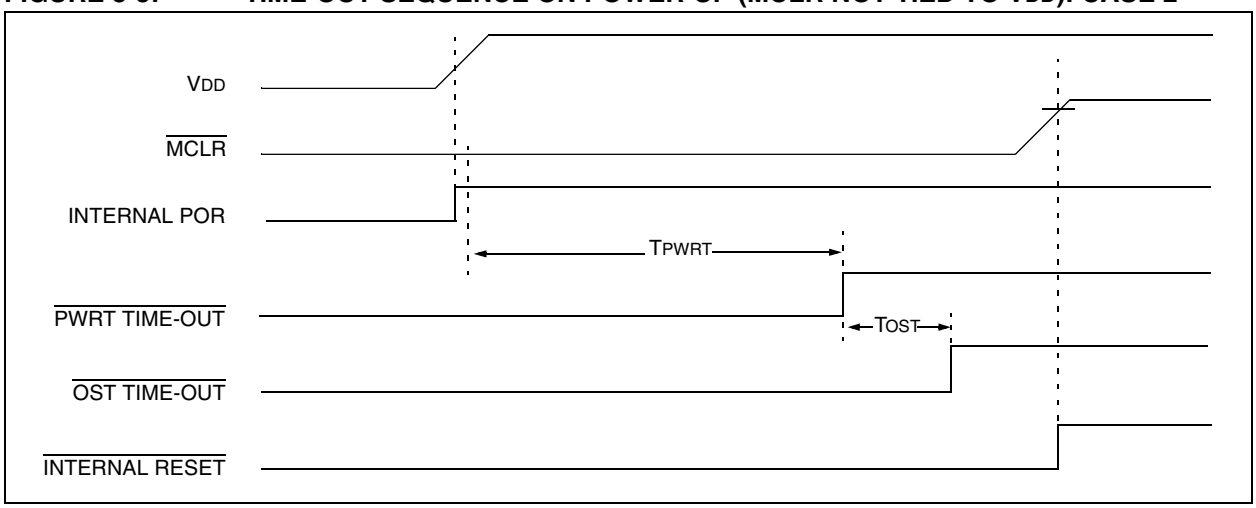



© 2006 Microchip Technology Inc.

**FIGURE 3-6: SLOW RISE TIME ($\overline{MCLR}$ TIED TO $V_{DD}$)**

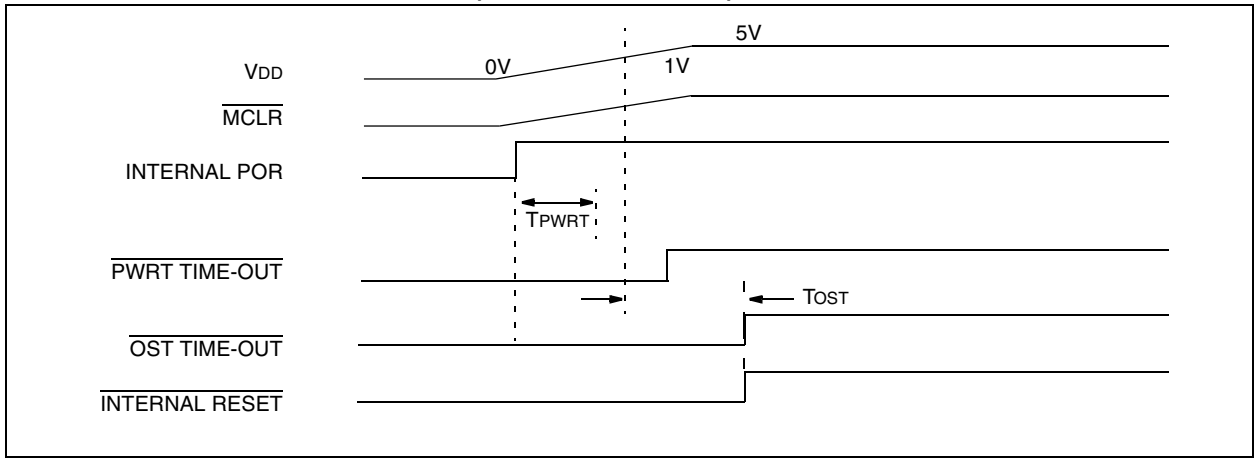


**FIGURE 3-7: TIME-OUT SEQUENCE ON POR W/ PLL ENABLED ($\overline{MCLR}$ TIED TO $V_{DD}$)**

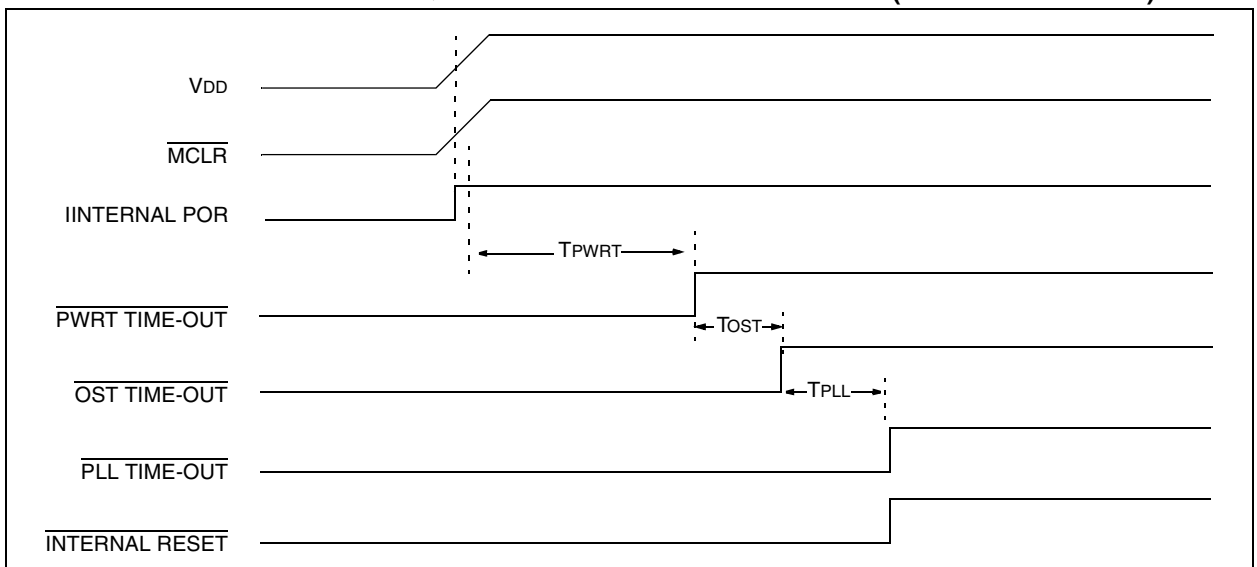


**Note:** $T_{OST}$ = 1024 clock cycles.
$T_{PLL} \approx$ 2 ms max. First three stages of the PWRT timer.

**NOTES:**


© 2006 Microchip Technology Inc.

# 4.0 MEMORY ORGANIZATION

There are three memory blocks in Enhanced MCU devices. These memory blocks are:

- Program Memory
- Data RAM
- Data EEPROM

Data and program memory use separate busses, which allows for concurrent access of these blocks.

Additional detailed information for FLASH program memory and Data EEPROM is provided in Section 5.0 and Section 6.0, respectively.

## 4.1 Program Memory Organization

A 21-bit program counter is capable of addressing the 2-Mbyte program memory space. Accessing a location between the physically implemented memory and the 2-Mbyte address will cause a read of all ’0’s (a `NOP` instruction).

The PIC18F252 and PIC18F452 each have 32 Kbytes of FLASH memory, while the PIC18F242 and PIC18F442 have 16 Kbytes of FLASH. This means that PIC18FX52 devices can store up to 16K of single word instructions, and PIC18FX42 devices can store up to 8K of single word instructions.

The RESET vector address is at 0000h and the interrupt vector addresses are at 0008h and 0018h.

Figure 4-1 shows the Program Memory Map for PIC18F242/442 devices and Figure 4-2 shows the Program Memory Map for PIC18F252/452 devices.

**FIGURE 4-1: PROGRAM MEMORY MAP AND STACK FOR PIC18F442/242**

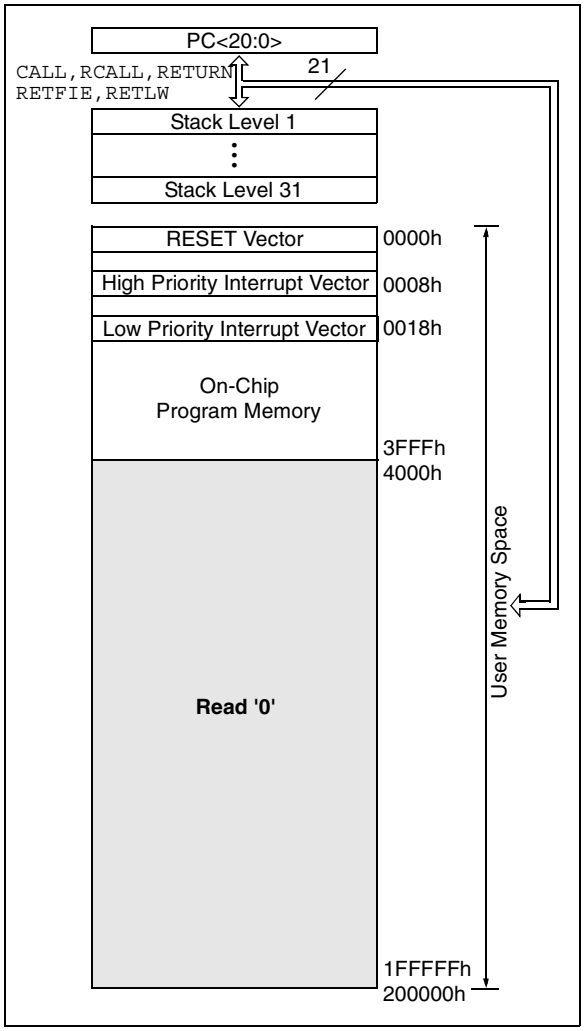


**FIGURE 4-2: PROGRAM MEMORY MAP AND STACK FOR PIC18F452/252**

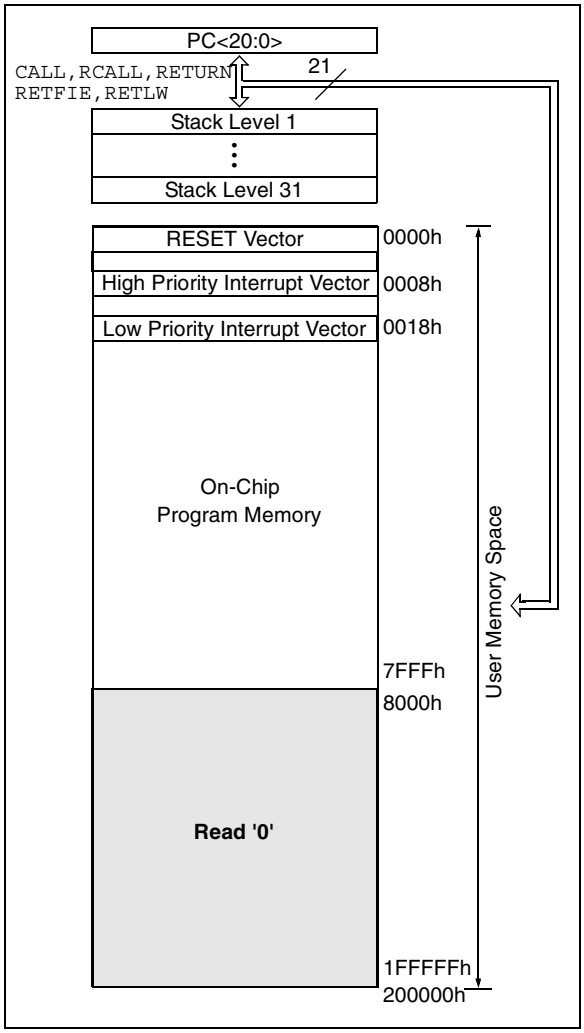



© 2006 Microchip Technology Inc.

## 4.2 Return Address Stack

The return address stack allows any combination of up to 31 program calls and interrupts to occur. The PC (Program Counter) is pushed onto the stack when a `CALL` or `RCALL` instruction is executed, or an interrupt is acknowledged. The PC value is pulled off the stack on a `RETURN`, `RETLW` or a `RETFIE` instruction. PCLATU and PCLATH are not affected by any of the `RETURN` or `CALL` instructions.

The stack operates as a 31-word by 21-bit RAM and a 5-bit stack pointer, with the stack pointer initialized to 00000b after all RESETS. There is no RAM associated with stack pointer 00000b. This is only a RESET value. During a `CALL` type instruction, causing a push onto the stack, the stack pointer is first incremented and the RAM location pointed to by the stack pointer is written with the contents of the PC. During a `RETURN` type instruction, causing a pop from the stack, the contents of the RAM location pointed to by the STKPTR are transferred to the PC and then the stack pointer is decremented.

The stack space is not part of either program or data space. The stack pointer is readable and writable, and the address on the top of the stack is readable and writable through SFR registers. Data can also be pushed to, or popped from, the stack using the top-of-stack SFRs. Status bits indicate if the stack pointer is at, or beyond the 31 levels provided.

### 4.2.1 TOP-OF-STACK ACCESS

The top of the stack is readable and writable. Three register locations, TOSU, TOSH and TOSL hold the contents of the stack location pointed to by the STKPTR register. This allows users to implement a software stack if necessary. After a `CALL`, `RCALL` or interrupt, the software can read the pushed value by reading the TOSU, TOSH and TOSL registers. These values can be placed on a user defined software stack. At return time, the software can replace the TOSU, TOSH and TOSL and do a return.

The user must disable the global interrupt enable bits during this time to prevent inadvertent stack operations.

### 4.2.2 RETURN STACK POINTER (STKPTR)

The STKPTR register contains the stack pointer value, the STKFUL (stack full) status bit, and the STKUNF (stack underflow) status bits. Register 4-1 shows the STKPTR register. The value of the stack pointer can be 0 through 31. The stack pointer increments when values are pushed onto the stack and decrements when values are popped off the stack. At RESET, the stack pointer value will be 0. The user may read and write the stack pointer value. This feature can be used by a Real Time Operating System for return stack maintenance.

After the PC is pushed onto the stack 31 times (without popping any values off the stack), the STKFUL bit is set. The STKFUL bit can only be cleared in software or by a POR.

The action that takes place when the stack becomes full depends on the state of the STVREN (Stack Overflow Reset Enable) configuration bit. Refer to Section 20.0 for a description of the device configuration bits. If STVREN is set (default), the 31st push will push the (PC + 2) value onto the stack, set the STKFUL bit, and reset the device. The STKFUL bit will remain set and the stack pointer will be set to ‘0’.

If STVREN is cleared, the STKFUL bit will be set on the 31st push and the stack pointer will increment to 31. Any additional pushes will not overwrite the 31st push, and STKPTR will remain at 31.

When the stack has been popped enough times to unload the stack, the next pop will return a value of zero to the PC and sets the STKUNF bit, while the stack pointer remains at 0. The STKUNF bit will remain set until cleared in software or a POR occurs.

| | |
|---|---|
| **Note:** | Returning a value of zero to the PC on an underflow has the effect of vectoring the program to the RESET vector, where the stack conditions can be verified and appropriate actions can be taken. |

**REGISTER 4-1: STKPTR REGISTER**

| R/C-0 | R/C-0 | U-0 | R/W-0 | R/W-0 | R/W-0 | R/W-0 | R/W-0 |
|---|---|---|---|---|---|---|---|
| STKOVF | STKUNF | — | SP4 | SP3 | SP2 | SP1 | SP0 |
| bit 7 | | | | | | | bit 0 |

bit 7[1] **STKOVF:** Stack Full Flag bit
1 = Stack became full or overflowed
0 = Stack has not become full or overflowed

bit 6[1] **STKUNF:** Stack Underflow Flag bit
1 = Stack underflow occurred
0 = Stack underflow did not occur

bit 5 **Unimplemented:** Read as '0'

bit 4-0 **SP4:SP0:** Stack Pointer Location bits

**Note 1:** Bit 7 and bit 6 can only be cleared in user software or by a POR.

| Legend: | | | |
|---|---|---|---|
| R = Readable bit | W = Writable bit | U = Unimplemented bit, read as ‘0’ | |
| - n = Value at POR | ’1’ = Bit is set | ’0’ = Bit is cleared | x = Bit is unknown |

**FIGURE 4-3: RETURN ADDRESS STACK AND ASSOCIATED REGISTERS**

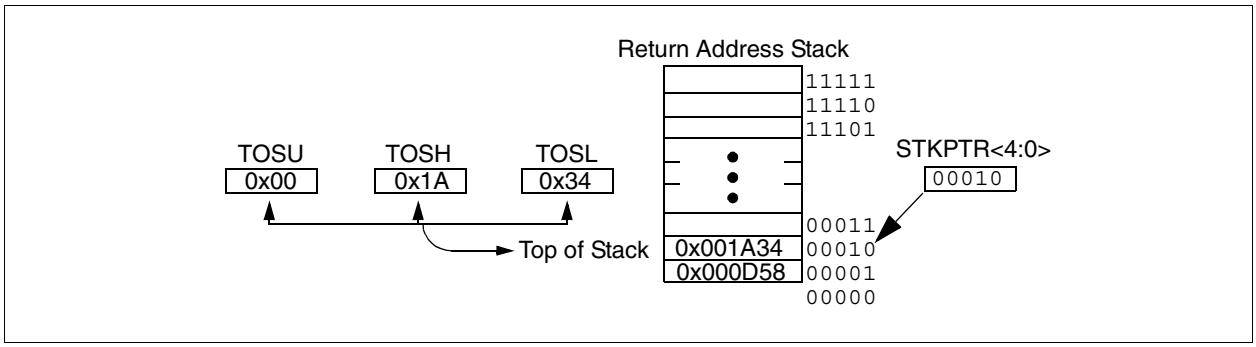


### 4.2.3 PUSH AND POP INSTRUCTIONS

Since the Top-of-Stack (TOS) is readable and writable, the ability to push values onto the stack and pull values off the stack without disturbing normal program execution is a desirable option. To push the current PC value onto the stack, a `PUSH` instruction can be executed. This will increment the stack pointer and load the current PC value onto the stack. TOSU, TOSH and TOSL can then be modified to place a return address on the stack.

The ability to pull the TOS value off of the stack and replace it with the value that was previously pushed onto the stack, without disturbing normal execution, is achieved by using the `POP` instruction. The `POP` instruction discards the current TOS by decrementing the stack pointer. The previous value pushed onto the stack then becomes the TOS value.

### 4.2.4 STACK FULL/UNDERFLOW RESETS

These resets are enabled by programming the STVREN configuration bit. When the STVREN bit is disabled, a full or underflow condition will set the appropriate STKFUL or STKUNF bit, but not cause a device RESET. When the STVREN bit is enabled, a full or underflow will set the appropriate STKFUL or STKUNF bit and then cause a device RESET. The STKFUL or STKUNF bits are only cleared by the user software or a POR Reset.


© 2006 Microchip Technology Inc.

## 4.3 Fast Register Stack

A “fast interrupt return” option is available for interrupts. A Fast Register Stack is provided for the STATUS, WREG and BSR registers and are only one in depth. The stack is not readable or writable and is loaded with the current value of the corresponding register when the processor vectors for an interrupt. The values in the registers are then loaded back into the working registers, if the `FAST RETURN` instruction is used to return from the interrupt.

A low or high priority interrupt source will push values into the stack registers. If both low and high priority interrupts are enabled, the stack registers cannot be used reliably for low priority interrupts. If a high priority interrupt occurs while servicing a low priority interrupt, the stack register values stored by the low priority interrupt will be overwritten.

If high priority interrupts are not disabled during low priority interrupts, users must save the key registers in software during a low priority interrupt.

If no interrupts are used, the fast register stack can be used to restore the STATUS, WREG and BSR registers at the end of a subroutine call. To use the fast register stack for a subroutine call, a `FAST CALL` instruction must be executed.

Example 4-1 shows a source code example that uses the fast register stack.

**EXAMPLE 4-1: FAST REGISTER STACK CODE EXAMPLE**

```
CALL SUB1, FAST     ;STATUS, WREG, BSR
                    ;SAVED IN FAST REGISTER
                    ;STACK
        •
        •

SUB1    •
        •
        •
    RETURN FAST     ;RESTORE VALUES SAVED
                    ;IN FAST REGISTER STACK
```

## 4.4 PCL, PCLATH and PCLATU

The program counter (PC) specifies the address of the instruction to fetch for execution. The PC is 21-bits wide. The low byte is called the PCL register. This register is readable and writable. The high byte is called the PCH register. This register contains the PC<15:8> bits and is not directly readable or writable. Updates to the PCH register may be performed through the PCLATH register. The upper byte is called PCU. This register contains the PC<20:16> bits and is not directly readable or writable. Updates to the PCU register may be performed through the PCLATU register.

The PC addresses bytes in the program memory. To prevent the PC from becoming misaligned with word instructions, the LSB of PCL is fixed to a value of ’0’. The PC increments by 2 to address sequential instructions in the program memory.

The `CALL`, `RCALL`, `GOTO` and program branch instructions write to the program counter directly. For these instructions, the contents of PCLATH and PCLATU are not transferred to the program counter.

The contents of PCLATH and PCLATU will be transferred to the program counter by an operation that writes PCL. Similarly, the upper two bytes of the program counter will be transferred to PCLATH and PCLATU by an operation that reads PCL. This is useful for computed offsets to the PC (see Section 4.8.1).

## 4.5 Clocking Scheme/Instruction Cycle

The clock input (from OSC1) is internally divided by four to generate four non-overlapping quadrature clocks, namely Q1, Q2, Q3 and Q4. Internally, the program counter (PC) is incremented every Q1, the instruction is fetched from the program memory and latched into the instruction register in Q4. The instruction is decoded and executed during the following Q1 through Q4. The clocks and instruction execution flow are shown in Figure 4-4.

**FIGURE 4-4: CLOCK/INSTRUCTION CYCLE**

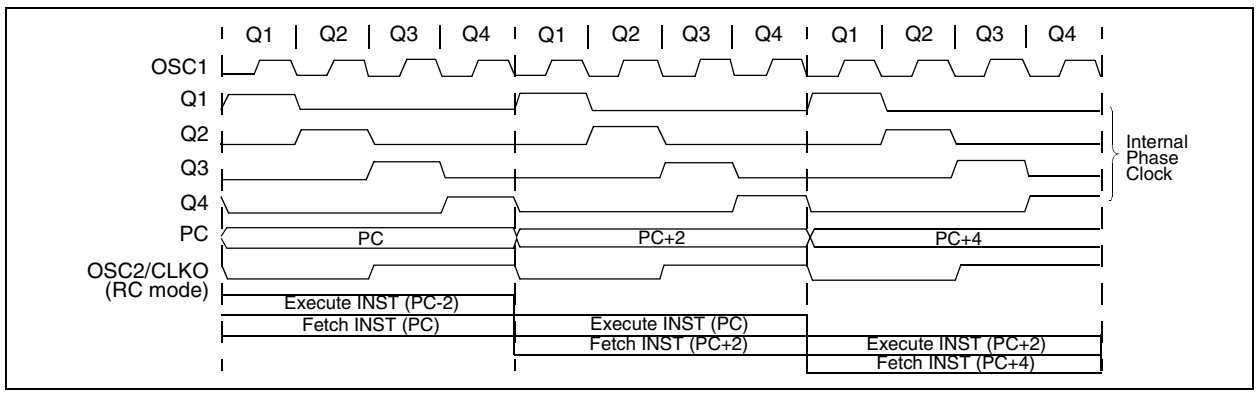

## 4.6 Instruction Flow/Pipelining

An "Instruction Cycle" consists of four Q cycles (Q1, Q2, Q3 and Q4). The instruction fetch and execute are pipelined such that fetch takes one instruction cycle, while decode and execute takes another instruction cycle. However, due to the pipelining, each instruction effectively executes in one cycle. If an instruction causes the program counter to change (e.g., `GOTO`) then two cycles are required to complete the instruction (Example 4-2).

A fetch cycle begins with the program counter (PC) incrementing in Q1.

In the execution cycle, the fetched instruction is latched into the "Instruction Register" (IR) in cycle Q1. This instruction is then decoded and executed during the Q2, Q3, and Q4 cycles. Data memory is read during Q2 (operand read) and written during Q4 (destination write).

**EXAMPLE 4-2: INSTRUCTION PIPELINE FLOW**

| | TCY0 | TCY1 | TCY2 | TCY3 | TCY4 | TCY5 |
|---|---|---|---|---|---|---|
| 1. MOVLW 55h | Fetch 1 | Execute 1 | | | | |
| 2. MOVWF PORTB | | Fetch 2 | Execute 2 | | | |
| 3. BRA SUB_1 | | | Fetch 3 | Execute 3 | | |
| 4. BSF PORTA, BIT3 (Forced NOP) | | | | Fetch 4 | Flush (NOP) | |
| 5. Instruction @ address SUB_1 | | | | | Fetch SUB_1 | Execute SUB_1 |

All instructions are single cycle, except for any program branches. These take two cycles since the fetch instruction is "flushed" from the pipeline while the new instruction is being fetched and then executed.

## 4.7 Instructions in Program Memory

The program memory is addressed in bytes. Instructions are stored as two bytes or four bytes in program memory. The Least Significant Byte of an instruction word is always stored in a program memory location with an even address (LSB ='0'). Figure 4-5 shows an example of how instruction words are stored in the program memory. To maintain alignment with instruction boundaries, the PC increments in steps of 2 and the LSB will always read '0' (see Section 4.4).

The `CALL` and `GOTO` instructions have an absolute program memory address embedded into the instruction. Since instructions are always stored on word boundaries, the data contained in the instruction is a word address. The word address is written to PC<20:1>, which accesses the desired byte address in program memory. Instruction #2 in Figure 4-5 shows how the instruction "`GOTO 000006h`' is encoded in the program memory. Program branch instructions which encode a relative address offset operate in the same manner. The offset value stored in a branch instruction represents the number of single word instructions that the PC will be offset by. Section 20.0 provides further details of the instruction set.

**FIGURE 4-5: INSTRUCTIONS IN PROGRAM MEMORY**

Program Memory Byte Locations →

| | | | LSB = 1 | LSB = 0 | Word Address ↓ |
|---|---|---|---|---|---|
| | | | | | 000000h |
| | | | | | 000002h |
| | | | | | 000004h |
| | | | | | 000006h |
| Instruction 1: | MOVLW | 055h | 0Fh | 55h | 000008h |
| Instruction 2: | GOTO | 000006h | EFh | 03h | 00000Ah |
| | | | F0h | 00h | 00000Ch |
| Instruction 3: | MOVFF | 123h, 456h | C1h | 23h | 00000Eh |
| | | | F4h | 56h | 000010h |
| | | | | | 000012h |
| | | | | | 000014h |


© 2006 Microchip Technology Inc.

### 4.7.1 TWO-WORD INSTRUCTIONS

The PIC18FXX2 devices have four two-word instructions: `MOVFF`, `CALL`, `GOTO` and `LFSR`. The second word of these instructions has the 4 MSBs set to 1's and is a special kind of `NOP` instruction. The lower 12 bits of the second word contain data to be used by the instruction. If the first word of the instruction is executed, the data in the second word is accessed. If the second word of the instruction is executed by itself (first word was skipped), it will execute as a `NOP`. This action is necessary when the two-word instruction is preceded by a conditional instruction that changes the PC. A program example that demonstrates this concept is shown in Example 4-3. Refer to Section 20.0 for further details of the instruction set.

**EXAMPLE 4-3: TWO-WORD INSTRUCTIONS**

**CASE 1:**

| Object Code | Source Code |
|---|---|
| 0110 0110 0000 0000 | TSTFSZ REG1 ; is RAM location 0? |
| 1100 0001 0010 0011 | MOVFF REG1, REG2 ; No, execute 2-word instruction |
| 1111 0100 0101 0110 | ; 2nd operand holds address of REG2 |
| 0010 0100 0000 0000 | ADDWF REG3 ; continue code |

**CASE 2:**

| Object Code | Source Code |
|---|---|
| 0110 0110 0000 0000 | TSTFSZ REG1 ; is RAM location 0? |
| 1100 0001 0010 0011 | MOVFF REG1, REG2 ; Yes |
| 1111 0100 0101 0110 | ; 2nd operand becomes NOP |
| 0010 0100 0000 0000 | ADDWF REG3 ; continue code |

## 4.8 Lookup Tables

Lookup tables are implemented two ways. These are:

- Computed `GOTO`
- Table Reads

### 4.8.1 COMPUTED GOTO

A computed `GOTO` is accomplished by adding an offset to the program counter (`ADDWF PCL`).

A lookup table can be formed with an `ADDWF PCL` instruction and a group of `RETLW 0xnn` instructions. WREG is loaded with an offset into the table before executing a call to that table. The first instruction of the called routine is the `ADDWF PCL` instruction. The next instruction executed will be one of the `RETLW 0xnn` instructions, that returns the value `0xnn` to the calling function.

The offset value (value in WREG) specifies the number of bytes that the program counter should advance.

In this method, only one data byte may be stored in each instruction location and room on the return address stack is required.

**Note:** The `ADDWF PCL` instruction does not update PCLATH and PCLATU. A read operation on `PCL` must be performed to update PCLATH and PCLATU.

### 4.8.2 TABLE READS/TABLE WRITES

A better method of storing data in program memory allows 2 bytes of data to be stored in each instruction location.

Lookup table data may be stored 2 bytes per program word by using table reads and writes. The table pointer (TBLPTR) specifies the byte address and the table latch (TABLAT) contains the data that is read from, or written to program memory. Data is transferred to/from program memory, one byte at a time.

A description of the Table Read/Table Write operation is shown in Section 3.0.

## 4.9 Data Memory Organization

The data memory is implemented as static RAM. Each register in the data memory has a 12-bit address, allowing up to 4096 bytes of data memory. Figure 4-6 and Figure 4-7 show the data memory organization for the PIC18FXX2 devices.

The data memory map is divided into as many as 16 banks that contain 256 bytes each. The lower 4 bits of the Bank Select Register (BSR<3:0>) select which bank will be accessed. The upper 4 bits for the BSR are not implemented.

The data memory contains Special Function Registers (SFR) and General Purpose Registers (GPR). The SFRs are used for control and status of the controller and peripheral functions, while GPRs are used for data storage and scratch pad operations in the user's application. The SFRs start at the last location of Bank 15 (0xFFF) and extend downwards. Any remaining space beyond the SFRs in the Bank may be implemented as GPRs. GPRs start at the first location of Bank 0 and grow upwards. Any read of an unimplemented location will read as '0's.

The entire data memory may be accessed directly or indirectly. Direct addressing may require the use of the BSR register. Indirect addressing requires the use of a File Select Register (FSRn) and a corresponding Indirect File Operand (INDFn). Each FSR holds a 12-bit address value that can be used to access any location in the Data Memory map without banking.

The instruction set and architecture allow operations across all banks. This may be accomplished by indirect addressing or by the use of the `MOVFF` instruction. The `MOVFF` instruction is a two-word/two-cycle instruction that moves a value from one register to another.

To ensure that commonly used registers (SFRs and select GPRs) can be accessed in a single cycle, regardless of the current BSR values, an Access Bank is implemented. A segment of Bank 0 and a segment of Bank 15 comprise the Access RAM. Section 4.10 provides a detailed description of the Access RAM.

### 4.9.1 GENERAL PURPOSE REGISTER FILE

The register file can be accessed either directly or indirectly. Indirect addressing operates using a File Select Register and corresponding Indirect File Operand. The operation of indirect addressing is shown in Section 4.12.

Enhanced MCU devices may have banked memory in the GPR area. GPRs are not initialized by a Power-on Reset and are unchanged on all other RESETS.

Data RAM is available for use as GPR registers by all instructions. The top half of Bank 15 (0xF80 to 0xFFF) contains SFRs. All other banks of data memory contain GPR registers, starting with Bank 0.

### 4.9.2 SPECIAL FUNCTION REGISTERS

The Special Function Registers (SFRs) are registers used by the CPU and Peripheral Modules for controlling the desired operation of the device. These registers are implemented as static RAM. A list of these registers is given in Table 4-1 and Table 4-2.

The SFRs can be classified into two sets; those associated with the "core" function and those related to the peripheral functions. Those registers related to the "core" are described in this section, while those related to the operation of the peripheral features are described in the section of that peripheral feature.

The SFRs are typically distributed among the peripherals whose functions they control.

The unused SFR locations will be unimplemented and read as '0's. See Table 4-1 for addresses for the SFRs.


© 2006 Microchip Technology Inc.

**FIGURE 4-6: DATA MEMORY MAP FOR PIC18F242/442**

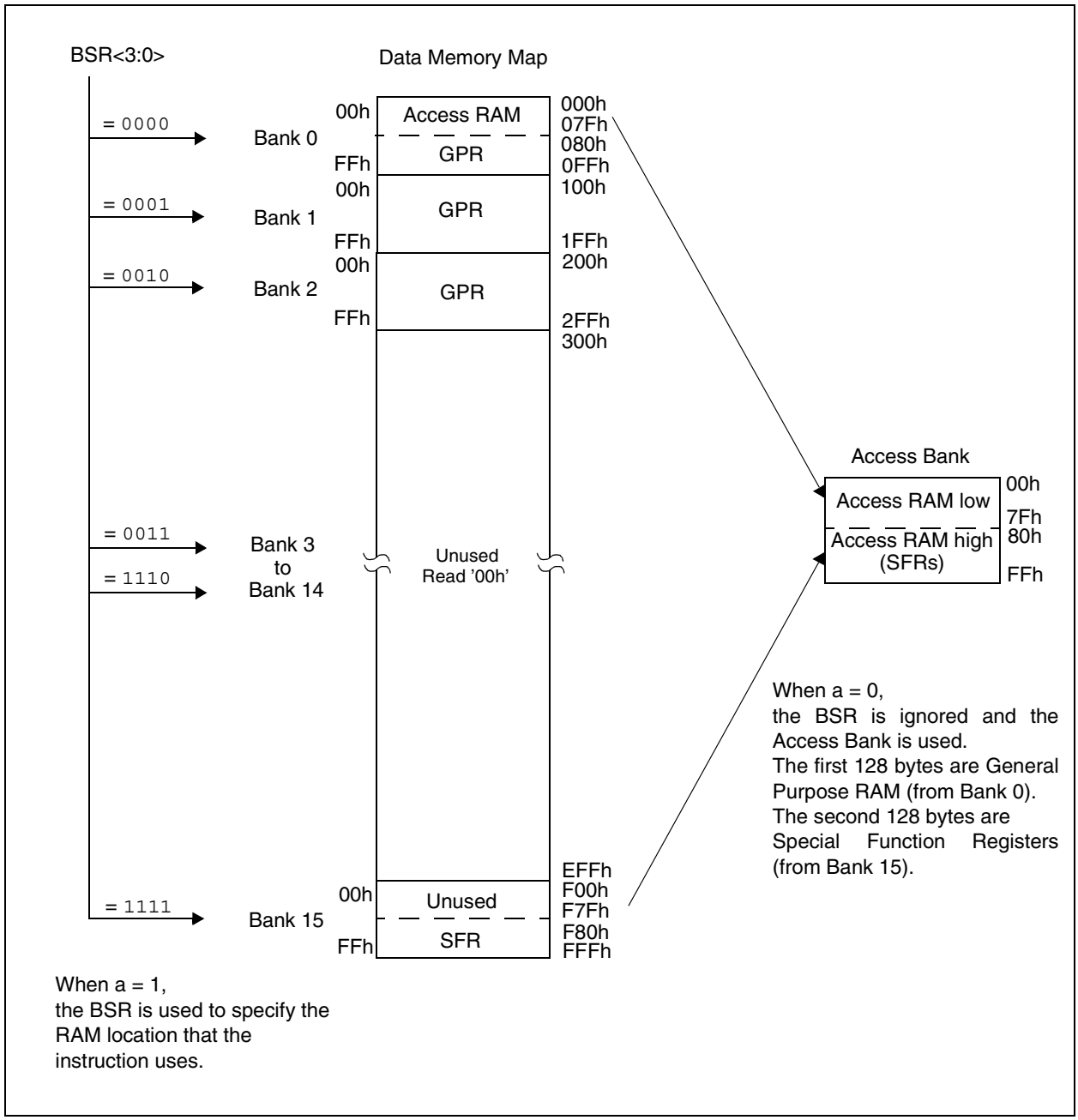

**FIGURE 4-7: DATA MEMORY MAP FOR PIC18F252/452**

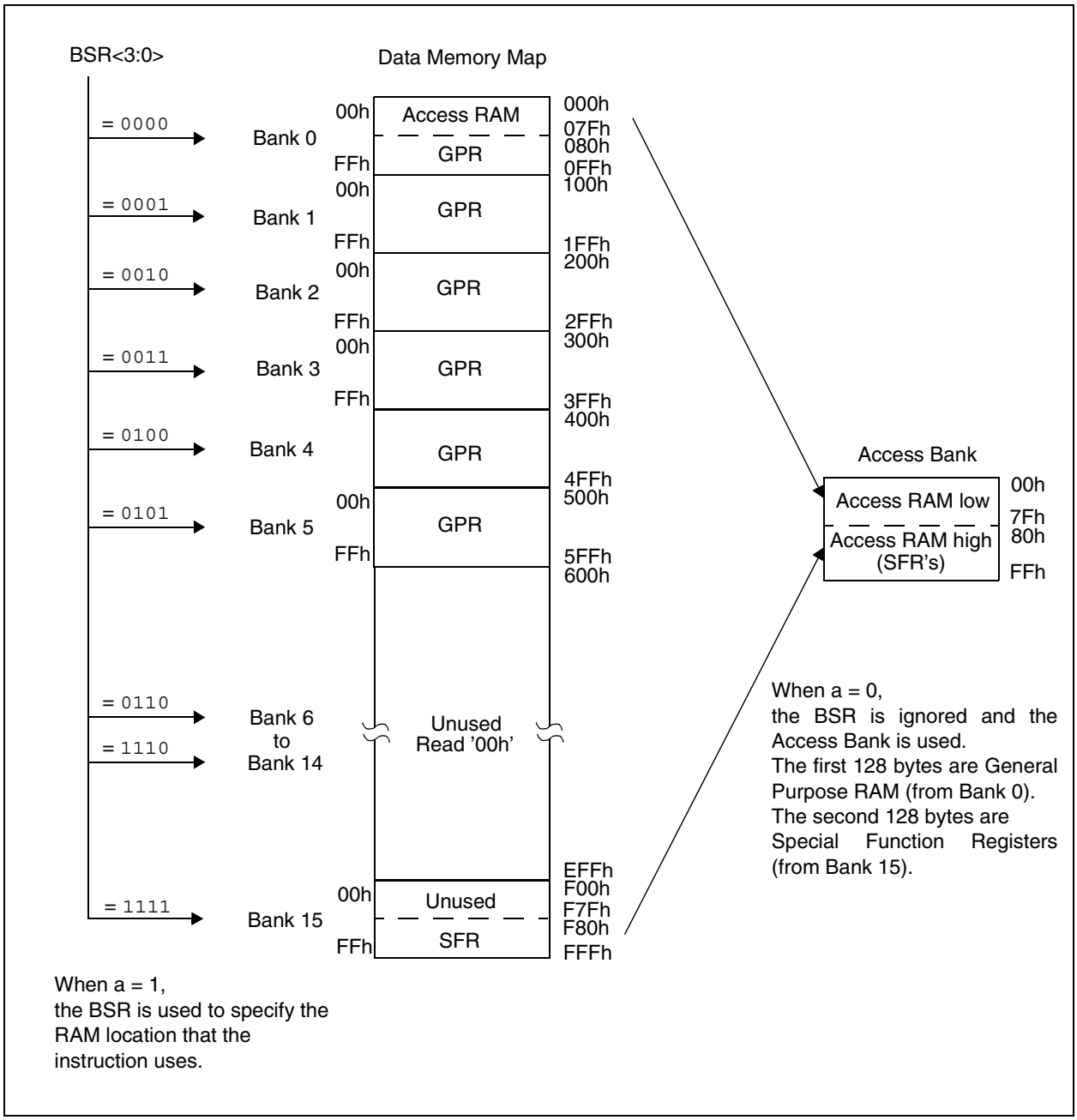



© 2006 Microchip Technology Inc.

**TABLE 4-1: SPECIAL FUNCTION REGISTER MAP**

| Address | Name | Address | Name | Address | Name | Address | Name |
|---|---|---|---|---|---|---|---|
| FFFh | TOSU | FDFh | INDF2(3) | FBFh | CCPR1H | F9Fh | IPR1 |
| FFEh | TOSH | FDEh | POSTINC2(3) | FBEh | CCPR1L | F9Eh | PIR1 |
| FFDh | TOSL | FDDh | POSTDEC2(3) | FBDh | CCP1CON | F9Dh | PIE1 |
| FFCh | STKPTR | FDCh | PREINC2(3) | FBCh | CCPR2H | F9Ch | — |
| FFBh | PCLATU | FDBh | PLUSW2(3) | FBBh | CCPR2L | F9Bh | — |
| FFAh | PCLATH | FDAh | FSR2H | FBAh | CCP2CON | F9Ah | — |
| FF9h | PCL | FD9h | FSR2L | FB9h | — | F99h | — |
| FF8h | TBLPTRU | FD8h | STATUS | FB8h | — | F98h | — |
| FF7h | TBLPTRH | FD7h | TMR0H | FB7h | — | F97h | — |
| FF6h | TBLPTRL | FD6h | TMR0L | FB6h | — | F96h | TRISE(2) |
| FF5h | TABLAT | FD5h | T0CON | FB5h | — | F95h | TRISD(2) |
| FF4h | PRODH | FD4h | — | FB4h | — | F94h | TRISC |
| FF3h | PRODL | FD3h | OSCCON | FB3h | TMR3H | F93h | TRISB |
| FF2h | INTCON | FD2h | LVDCON | FB2h | TMR3L | F92h | TRISA |
| FF1h | INTCON2 | FD1h | WDTCON | FB1h | T3CON | F91h | — |
| FF0h | INTCON3 | FD0h | RCON | FB0h | — | F90h | — |
| FEFh | INDF0(3) | FCFh | TMR1H | FAFh | SPBRG | F8Fh | — |
| FEEh | POSTINC0(3) | FCEh | TMR1L | FAEh | RCREG | F8Eh | — |
| FEDh | POSTDEC0(3) | FCDh | T1CON | FADh | TXREG | F8Dh | LATE(2) |
| FECh | PREINC0(3) | FCCh | TMR2 | FACh | TXSTA | F8Ch | LATD(2) |
| FEBh | PLUSW0(3) | FCBh | PR2 | FABh | RCSTA | F8Bh | LATC |
| FEAh | FSR0H | FCAh | T2CON | FAAh | — | F8Ah | LATB |
| FE9h | FSR0L | FC9h | SSPBUF | FA9h | EEADR | F89h | LATA |
| FE8h | WREG | FC8h | SSPADD | FA8h | EEDATA | F88h | — |
| FE7h | INDF1(3) | FC7h | SSPSTAT | FA7h | EECON2 | F87h | — |
| FE6h | POSTINC1(3) | FC6h | SSPCON1 | FA6h | EECON1 | F86h | — |
| FE5h | POSTDEC1(3) | FC5h | SSPCON2 | FA5h | — | F85h | — |
| FE4h | PREINC1(3) | FC4h | ADRESH | FA4h | — | F84h | PORTE(2) |
| FE3h | PLUSW1(3) | FC3h | ADRESL | FA3h | — | F83h | PORTD(2) |
| FE2h | FSR1H | FC2h | ADCON0 | FA2h | IPR2 | F82h | PORTC |
| FE1h | FSR1L | FC1h | ADCON1 | FA1h | PIR2 | F81h | PORTB |
| FE0h | BSR | FC0h | — | FA0h | PIE2 | F80h | PORTA |

**Note 1:** Unimplemented registers are read as ’0’.
**2:** This register is not available on PIC18F2X2 devices.
**3:** This is not a physical register.

## TABLE 4-2: REGISTER FILE SUMMARY

| File Name | Bit 7 | Bit 6 | Bit 5 | Bit 4 | Bit 3 | Bit 2 | Bit 1 | Bit 0 | Value on POR, BOR | Details on page: |
|---|---|---|---|---|---|---|---|---|---|---|
| TOSU | — | — | — | Top-of-Stack upper Byte (TOS<20:16>) | | | | | ---0 0000 | 37 |
| TOSH | Top-of-Stack High Byte (TOS<15:8>) | | | | | | | | 0000 0000 | 37 |
| TOSL | Top-of-Stack Low Byte (TOS<7:0>) | | | | | | | | 0000 0000 | 37 |
| STKPTR | STKFUL | STKUNF | — | Return Stack Pointer | | | | | 00-0 0000 | 38 |
| PCLATU | — | — | — | Holding Register for PC<20:16> | | | | | ---0 0000 | 39 |
| PCLATH | Holding Register for PC<15:8> | | | | | | | | 0000 0000 | 39 |
| PCL | PC Low Byte (PC<7:0>) | | | | | | | | 0000 0000 | 39 |
| TBLPTRU | — | — | bit21(2) | Program Memory Table Pointer Upper Byte (TBLPTR<20:16>) | | | | | --00 0000 | 58 |
| TBLPTRH | Program Memory Table Pointer High Byte (TBLPTR<15:8>) | | | | | | | | 0000 0000 | 58 |
| TBLPTRL | Program Memory Table Pointer Low Byte (TBLPTR<7:0>) | | | | | | | | 0000 0000 | 58 |
| TABLAT | Program Memory Table Latch | | | | | | | | 0000 0000 | 58 |
| PRODH | Product Register High Byte | | | | | | | | xxxx xxxx | 71 |
| PRODL | Product Register Low Byte | | | | | | | | xxxx xxxx | 71 |
| INTCON | GIE/GIEH | PEIE/GIEL | TMR0IE | INT0IE | RBIE | TMR0IF | INT0IF | RBIF | 0000 000x | 75 |
| INTCON2 | RBPU | INTEDG0 | INTEDG1 | INTEDG2 | — | TMR0IP | — | RBIP | 1111 -1-1 | 76 |
| INTCON3 | INT2IP | INT1IP | — | INT2IE | INT1IE | — | INT2IF | INT1IF | 11-0 0-00 | 77 |
| INDF0 | Uses contents of FSR0 to address data memory - value of FSR0 not changed (not a physical register) | | | | | | | | n/a | 50 |
| POSTINC0 | Uses contents of FSR0 to address data memory - value of FSR0 post-incremented (not a physical register) | | | | | | | | n/a | 50 |
| POSTDEC0 | Uses contents of FSR0 to address data memory - value of FSR0 post-decremented (not a physical register) | | | | | | | | n/a | 50 |
| PREINC0 | Uses contents of FSR0 to address data memory - value of FSR0 pre-incremented (not a physical register) | | | | | | | | n/a | 50 |
| PLUSW0 | Uses contents of FSR0 to address data memory - value of FSR0 (not a physical register). Offset by value in WREG. | | | | | | | | n/a | 50 |
| FSR0H | — | — | — | — | Indirect Data Memory Address Pointer 0 High Byte | | | | ---- 0000 | 50 |
| FSR0L | Indirect Data Memory Address Pointer 0 Low Byte | | | | | | | | xxxx xxxx | 50 |
| WREG | Working Register | | | | | | | | xxxx xxxx | n/a |
| INDF1 | Uses contents of FSR1 to address data memory - value of FSR1 not changed (not a physical register) | | | | | | | | n/a | 50 |
| POSTINC1 | Uses contents of FSR1 to address data memory - value of FSR1 post-incremented (not a physical register) | | | | | | | | n/a | 50 |
| POSTDEC1 | Uses contents of FSR1 to address data memory - value of FSR1 post-decremented (not a physical register) | | | | | | | | n/a | 50 |
| PREINC1 | Uses contents of FSR1 to address data memory - value of FSR1 pre-incremented (not a physical register) | | | | | | | | n/a | 50 |
| PLUSW1 | Uses contents of FSR1 to address data memory - value of FSR1 (not a physical register). Offset by value in WREG. | | | | | | | | n/a | 50 |
| FSR1H | — | — | — | — | Indirect Data Memory Address Pointer 1 High Byte | | | | ---- 0000 | 50 |
| FSR1L | Indirect Data Memory Address Pointer 1 Low Byte | | | | | | | | xxxx xxxx | 50 |
| BSR | — | — | — | — | Bank Select Register | | | | ---- 0000 | 49 |
| INDF2 | Uses contents of FSR2 to address data memory - value of FSR2 not changed (not a physical register) | | | | | | | | n/a | 50 |
| POSTINC2 | Uses contents of FSR2 to address data memory - value of FSR2 post-incremented (not a physical register) | | | | | | | | n/a | 50 |
| POSTDEC2 | Uses contents of FSR2 to address data memory - value of FSR2 post-decremented (not a physical register) | | | | | | | | n/a | 50 |
| PREINC2 | Uses contents of FSR2 to address data memory - value of FSR2 pre-incremented (not a physical register) | | | | | | | | n/a | 50 |
| PLUSW2 | Uses contents of FSR2 to address data memory - value of FSR2 (not a physical register). Offset by value in WREG. | | | | | | | | n/a | 50 |
| FSR2H | — | — | — | — | Indirect Data Memory Address Pointer 2 High Byte | | | | ---- 0000 | 50 |
| FSR2L | Indirect Data Memory Address Pointer 2 Low Byte | | | | | | | | xxxx xxxx | 50 |
| STATUS | — | — | — | N | OV | Z | DC | C | ---x xxxx | 52 |
| TMR0H | Timer0 Register High Byte | | | | | | | | 0000 0000 | 105 |
| TMR0L | Timer0 Register Low Byte | | | | | | | | xxxx xxxx | 105 |
| T0CON | TMR0ON | T08BIT | T0CS | T0SE | PSA | T0PS2 | T0PS1 | T0PS0 | 1111 1111 | 103 |

Legend: x = unknown, u = unchanged, - = unimplemented, q = value depends on condition

**Note 1:** RA6 and associated bits are configured as port pins in RCIO and ECIO Oscillator mode only and read '0' in all other Oscillator modes.

**2:** Bit 21 of the TBLPTRU allows access to the device configuration bits.

**3:** These registers and bits are reserved on the PIC18F2X2 devices; always maintain these clear.


© 2006 Microchip Technology Inc.

## TABLE 4-2: REGISTER FILE SUMMARY (CONTINUED)

| File Name | Bit 7 | Bit 6 | Bit 5 | Bit 4 | Bit 3 | Bit 2 | Bit 1 | Bit 0 | Value on POR, BOR | Details on page: |
|---|---|---|---|---|---|---|---|---|---|---|
| OSCCON | — | — | — | — | — | — | — | SCS | ---- ---0 | 21 |
| LVDCON | — | — | IRVST | LVDEN | LVDL3 | LVDL2 | LVDL1 | LVDL0 | --00 0101 | 191 |
| WDTCON | — | — | — | — | — | — | — | SWDTE | ---- ---0 | 203 |
| RCON | IPEN | — | — | $\overline{RI}$ | $\overline{TO}$ | $\overline{PD}$ | $\overline{POR}$ | $\overline{BOR}$ | 0--1 11qq | 53, 28, 84 |
| TMR1H | Timer1 Register High Byte | | | | | | | | xxxx xxxx | 107 |
| TMR1L | Timer1 Register Low Byte | | | | | | | | xxxx xxxx | 107 |
| T1CON | RD16 | — | T1CKPS1 | T1CKPS0 | T1OSCEN | $\overline{T1SYNC}$ | TMR1CS | TMR1ON | 0-00 0000 | 107 |
| TMR2 | Timer2 Register | | | | | | | | 0000 0000 | 111 |
| PR2 | Timer2 Period Register | | | | | | | | 1111 1111 | 112 |
| T2CON | — | TOUTPS3 | TOUTPS2 | TOUTPS1 | TOUTPS0 | TMR2ON | T2CKPS1 | T2CKPS0 | -000 0000 | 111 |
| SSPBUF | SSP Receive Buffer/Transmit Register | | | | | | | | xxxx xxxx | 125 |
| SSPADD | SSP Address Register in $I^2C$ Slave mode. SSP Baud Rate Reload Register in $I^2C$ Master mode. | | | | | | | | 0000 0000 | 134 |
| SSPSTAT | SMP | CKE | D/$\overline{A}$ | P | S | R/$\overline{W}$ | UA | BF | 0000 0000 | 126 |
| SSPCON1 | WCOL | SSPOV | SSPEN | CKP | SSPM3 | SSPM2 | SSPM1 | SSPM0 | 0000 0000 | 127 |
| SSPCON2 | GCEN | ACKSTAT | ACKDT | ACKEN | RCEN | PEN | RSEN | SEN | 0000 0000 | 137 |
| ADRESH | A/D Result Register High Byte | | | | | | | | xxxx xxxx | 187,188 |
| ADRESL | A/D Result Register Low Byte | | | | | | | | xxxx xxxx | 187,188 |
| ADCON0 | ADCS1 | ADCS0 | CHS2 | CHS1 | CHS0 | GO/$\overline{DONE}$ | — | ADON | 0000 00-0 | 181 |
| ADCON1 | ADFM | ADCS2 | — | — | PCFG3 | PCFG2 | PCFG1 | PCFG0 | 00-- 0000 | 182 |
| CCPR1H | Capture/Compare/PWM Register1 High Byte | | | | | | | | xxxx xxxx | 121, 123 |
| CCPR1L | Capture/Compare/PWM Register1 Low Byte | | | | | | | | xxxx xxxx | 121, 123 |
| CCP1CON | — | — | DC1B1 | DC1B0 | CCP1M3 | CCP1M2 | CCP1M1 | CCP1M0 | --00 0000 | 117 |
| CCPR2H | Capture/Compare/PWM Register2 High Byte | | | | | | | | xxxx xxxx | 121, 123 |
| CCPR2L | Capture/Compare/PWM Register2 Low Byte | | | | | | | | xxxx xxxx | 121, 123 |
| CCP2CON | — | — | DC2B1 | DC2B0 | CCP2M3 | CCP2M2 | CCP2M1 | CCP2M0 | --00 0000 | 117 |
| TMR3H | Timer3 Register High Byte | | | | | | | | xxxx xxxx | 113 |
| TMR3L | Timer3 Register Low Byte | | | | | | | | xxxx xxxx | 113 |
| T3CON | RD16 | T3CCP2 | T3CKPS1 | T3CKPS0 | T3CCP1 | $\overline{T3SYNC}$ | TMR3CS | TMR3ON | 0000 0000 | 113 |
| SPBRG | USART1 Baud Rate Generator | | | | | | | | 0000 0000 | 168 |
| RCREG | USART1 Receive Register | | | | | | | | 0000 0000 | 175, 178, 180 |
| TXREG | USART1 Transmit Register | | | | | | | | 0000 0000 | 173, 176, 179 |
| TXSTA | CSRC | TX9 | TXEN | SYNC | — | BRGH | TRMT | TX9D | 0000 -010 | 166 |
| RCSTA | SPEN | RX9 | SREN | CREN | ADDEN | FERR | OERR | RX9D | 0000 000x | 167 |
| EEADR | Data EEPROM Address Register | | | | | | | | 0000 0000 | 65, 69 |
| EEDATA | Data EEPROM Data Register | | | | | | | | 0000 0000 | 69 |
| EECON2 | Data EEPROM Control Register 2 (not a physical register) | | | | | | | | ---- ---- | 65, 69 |
| EECON1 | EEPGD | CFGS | — | FREE | WRERR | WREN | WR | RD | xx-0 x000 | 66 |

Legend: x = unknown, u = unchanged, - = unimplemented, q = value depends on condition

**Note 1:** RA6 and associated bits are configured as port pins in RCIO and ECIO Oscillator mode only and read '0' in all other Oscillator modes.

**2:** Bit 21 of the TBLPTRU allows access to the device configuration bits.

**3:** These registers and bits are reserved on the PIC18F2X2 devices; always maintain these clear.

### TABLE 4-2: REGISTER FILE SUMMARY (CONTINUED)

| File Name | Bit 7 | Bit 6 | Bit 5 | Bit 4 | Bit 3 | Bit 2 | Bit 1 | Bit 0 | Value on POR, BOR | Details on page: |
|---|---|---|---|---|---|---|---|---|---|---|
| IPR2 | — | — | — | EEIP | BCLIP | LVDIP | TMR3IP | CCP2IP | ---1 1111 | 83 |
| PIR2 | — | — | — | EEIF | BCLIF | LVDIF | TMR3IF | CCP2IF | ---0 0000 | 79 |
| PIE2 | — | — | — | EEIE | BCLIE | LVDIE | TMR3IE | CCP2IE | ---0 0000 | 81 |
| IPR1 | PSPIP(3) | ADIP | RCIP | TXIP | SSPIP | CCP1IP | TMR2IP | TMR1IP | 1111 1111 | 82 |
| PIR1 | PSPIF(3) | ADIF | RCIF | TXIF | SSPIF | CCP1IF | TMR2IF | TMR1IF | 0000 0000 | 78 |
| PIE1 | PSPIE(3) | ADIE | RCIE | TXIE | SSPIE | CCP1IE | TMR2IE | TMR1IE | 0000 0000 | 80 |
| TRISE(3) | IBF | OBF | IBOV | PSPMODE | — | Data Direction bits for PORTE | | | 0000 -111 | 98 |
| TRISD(3) | Data Direction Control Register for PORTD | | | | | | | | 1111 1111 | 96 |
| TRISC | Data Direction Control Register for PORTC | | | | | | | | 1111 1111 | 93 |
| TRISB | Data Direction Control Register for PORTB | | | | | | | | 1111 1111 | 90 |
| TRISA | — | TRISA6(1) | Data Direction Control Register for PORTA | | | | | | -111 1111 | 87 |
| LATE(3) | — | — | — | — | — | Read PORTE Data Latch, Write PORTE Data Latch | | | ---- -xxx | 99 |
| LATD(3) | Read PORTD Data Latch, Write PORTD Data Latch | | | | | | | | xxxx xxxx | 95 |
| LATC | Read PORTC Data Latch, Write PORTC Data Latch | | | | | | | | xxxx xxxx | 93 |
| LATB | Read PORTB Data Latch, Write PORTB Data Latch | | | | | | | | xxxx xxxx | 90 |
| LATA | — | LATA6(1) | Read PORTA Data Latch, Write PORTA Data Latch(1) | | | | | | -xxx xxxx | 87 |
| PORTE(3) | Read PORTE pins, Write PORTE Data Latch | | | | | | | | ---- -000 | 99 |
| PORTD(3) | Read PORTD pins, Write PORTD Data Latch | | | | | | | | xxxx xxxx | 95 |
| PORTC | Read PORTC pins, Write PORTC Data Latch | | | | | | | | xxxx xxxx | 93 |
| PORTB | Read PORTB pins, Write PORTB Data Latch | | | | | | | | xxxx xxxx | 90 |
| PORTA | — | RA6(1) | Read PORTA pins, Write PORTA Data Latch(1) | | | | | | -x0x 0000 | 87 |

Legend: x = unknown, u = unchanged, - = unimplemented, q = value depends on condition

**Note 1:** RA6 and associated bits are configured as port pins in RCIO and ECIO Oscillator mode only and read '0' in all other Oscillator modes.

**2:** Bit 21 of the TBLPTRU allows access to the device configuration bits.

**3:** These registers and bits are reserved on the PIC18F2X2 devices; always maintain these clear.


© 2006 Microchip Technology Inc.

## 4.10 Access Bank

The Access Bank is an architectural enhancement which is very useful for C compiler code optimization. The techniques used by the C compiler may also be useful for programs written in assembly.

This data memory region can be used for:

- Intermediate computational values
- Local variables of subroutines
- Faster context saving/switching of variables
- Common variables
- Faster evaluation/control of SFRs (no banking)

The Access Bank is comprised of the upper 128 bytes in Bank 15 (SFRs) and the lower 128 bytes in Bank 0. These two sections will be referred to as Access RAM High and Access RAM Low, respectively. Figure 4-6 and Figure 4-7 indicate the Access RAM areas.

A bit in the instruction word specifies if the operation is to occur in the bank specified by the BSR register or in the Access Bank. This bit is denoted by the ’a’ bit (for access bit).

When forced in the Access Bank (a = 0), the last address in Access RAM Low is followed by the first address in Access RAM High. Access RAM High maps the Special Function registers, so that these registers can be accessed without any software overhead. This is useful for testing status flags and modifying control bits.

## 4.11 Bank Select Register (BSR)

The need for a large general purpose memory space dictates a RAM banking scheme. The data memory is partitioned into sixteen banks. When using direct addressing, the BSR should be configured for the desired bank.

BSR<3:0> holds the upper 4 bits of the 12-bit RAM address. The BSR<7:4> bits will always read ’0’s, and writes will have no effect.

A `MOVLB` instruction has been provided in the instruction set to assist in selecting banks.

If the currently selected bank is not implemented, any read will return all '0's and all writes are ignored. The STATUS register bits will be set/cleared as appropriate for the instruction performed.

Each Bank extends up to FFh (256 bytes). All data memory is implemented as static RAM.

A `MOVFF` instruction ignores the BSR, since the 12-bit addresses are embedded into the instruction word.

Section 4.12 provides a description of indirect addressing, which allows linear addressing of the entire RAM space.

**FIGURE 4-8: DIRECT ADDRESSING**

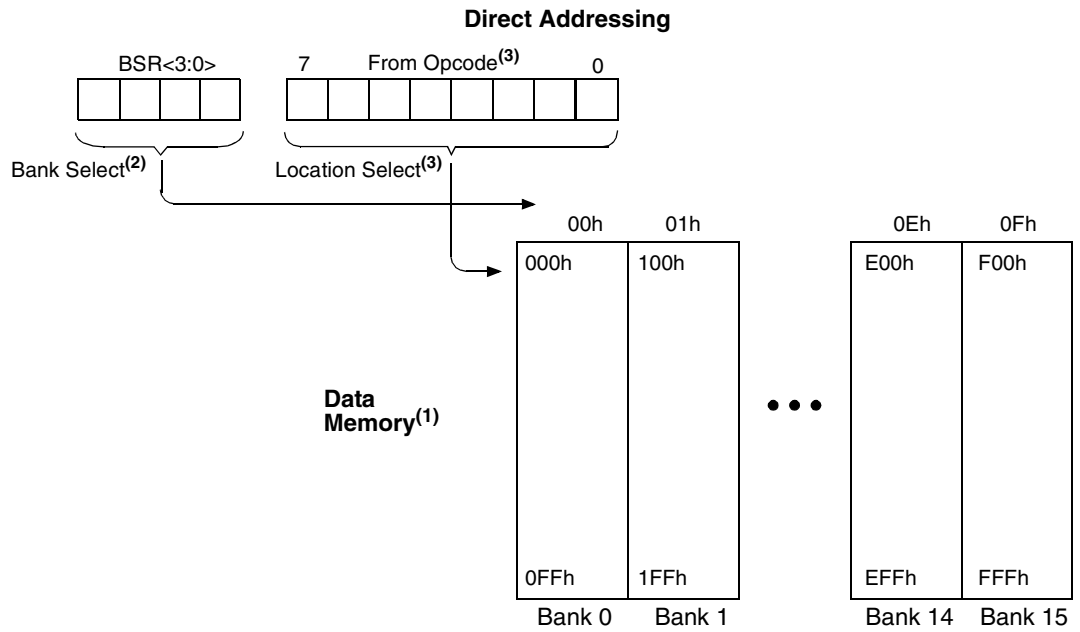


**Note 1:** For register file map detail, see Table 4-1.

**2:** The access bit of the instruction can be used to force an override of the selected bank (BSR<3:0>) to the registers of the Access Bank.

**3:** The `MOVFF` instruction embeds the entire 12-bit address in the instruction.

## 4.12 Indirect Addressing, INDF and FSR Registers

Indirect addressing is a mode of addressing data memory, where the data memory address in the instruction is not fixed. An FSR register is used as a pointer to the data memory location that is to be read or written. Since this pointer is in RAM, the contents can be modified by the program. This can be useful for data tables in the data memory and for software stacks. Figure 4-9 shows the operation of indirect addressing. This shows the moving of the value to the data memory address specified by the value of the FSR register.

Indirect addressing is possible by using one of the INDF registers. Any instruction using the INDF register actually accesses the register pointed to by the File Select Register, FSR. Reading the INDF register itself, indirectly (FSR = 0), will read 00h. Writing to the INDF register indirectly, results in a no operation. The FSR register contains a 12-bit address, which is shown in Figure 4-10.

The INDFn register is not a physical register. Addressing INDFn actually addresses the register whose address is contained in the FSRn register (FSRn is a pointer). This is indirect addressing.

Example 4-4 shows a simple use of indirect addressing to clear the RAM in Bank1 (locations 100h-1FFh) in a minimum number of instructions.

**EXAMPLE 4-4: HOW TO CLEAR RAM (BANK1) USING INDIRECT ADDRESSING**

```
        LFSR  FSR0 ,0x100  ;
NEXT    CLRF  POSTINC0     ; Clear INDF
                           ; register and
                           ; inc pointer
        BTFSS FSR0H, 1     ; All done with
                           ; Bank1?
        GOTO  NEXT         ; NO, clear next
CONTINUE                   ; YES, continue
```

There are three indirect addressing registers. To address the entire data memory space (4096 bytes), these registers are 12-bit wide. To store the 12-bits of addressing information, two 8-bit registers are required. These indirect addressing registers are:

1. FSR0: composed of FSR0H:FSR0L
2. FSR1: composed of FSR1H:FSR1L
3. FSR2: composed of FSR2H:FSR2L

In addition, there are registers INDF0, INDF1 and INDF2, which are not physically implemented. Reading or writing to these registers activates indirect addressing, with the value in the corresponding FSR register being the address of the data. If an instruction writes a value to INDF0, the value will be written to the address pointed to by FSR0H:FSR0L. A read from INDF1 reads the data from the address pointed to by FSR1H:FSR1L. INDFn can be used in code anywhere an operand can be used.

If INDF0, INDF1 or INDF2 are read indirectly via an FSR, all '0's are read (zero bit is set). Similarly, if INDF0, INDF1 or INDF2 are written to indirectly, the operation will be equivalent to a `NOP` instruction and the STATUS bits are not affected.

### 4.12.1 INDIRECT ADDRESSING OPERATION

Each FSR register has an INDF register associated with it, plus four additional register addresses. Performing an operation on one of these five registers determines how the FSR will be modified during indirect addressing.

When data access is done to one of the five INDFn locations, the address selected will configure the FSRn register to:

- Do nothing to FSRn after an indirect access (no change) - INDFn
- Auto-decrement FSRn after an indirect access (post-decrement) - POSTDECn
- Auto-increment FSRn after an indirect access (post-increment) - POSTINCn
- Auto-increment FSRn before an indirect access (pre-increment) - PREINCn
- Use the value in the WREG register as an offset to FSRn. Do not modify the value of the WREG or the FSRn register after an indirect access (no change) - PLUSWn

When using the auto-increment or auto-decrement features, the effect on the FSR is not reflected in the STATUS register. For example, if the indirect address causes the FSR to equal '0', the Z bit will not be set.

Incrementing or decrementing an FSR affects all 12 bits. That is, when FSRnL overflows from an increment, FSRnH will be incremented automatically.

Adding these features allows the FSRn to be used as a stack pointer, in addition to its uses for table operations in data memory.

Each FSR has an address associated with it that performs an indexed indirect access. When a data access to this INDFn location (PLUSWn) occurs, the FSRn is configured to add the signed value in the WREG register and the value in FSR to form the address before an indirect access. The FSR value is not changed.

If an FSR register contains a value that points to one of the INDFn, an indirect read will read 00h (zero bit is set), while an indirect write will be equivalent to a `NOP` (STATUS bits are not affected).

If an indirect addressing operation is done where the target address is an FSRnH or FSRnL register, the write operation will dominate over the pre- or post-increment/decrement functions.


© 2006 Microchip Technology Inc.

**FIGURE 4-9: INDIRECT ADDRESSING OPERATION**

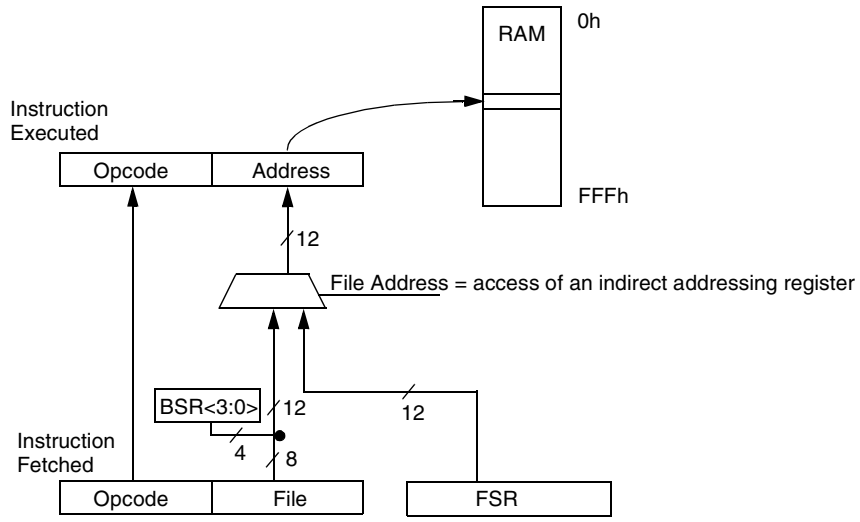


**FIGURE 4-10: INDIRECT ADDRESSING**

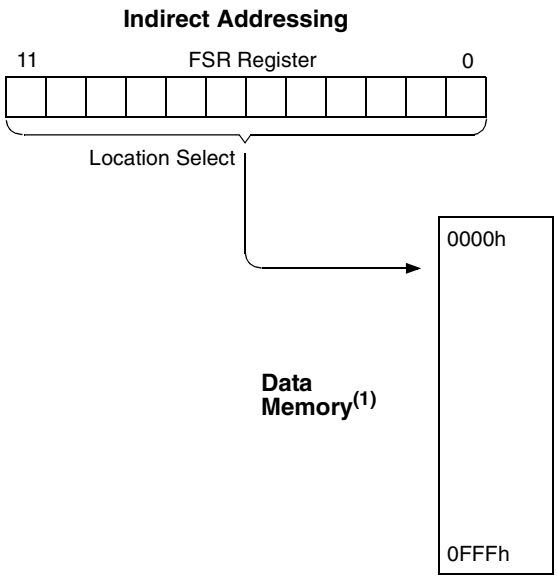


**Note 1:** For register file map detail, see Table 4-1.

## 4.13 STATUS Register

The STATUS register, shown in Register 4-2, contains the arithmetic status of the ALU. The STATUS register can be the destination for any instruction, as with any other register. If the STATUS register is the destination for an instruction that affects the Z, DC, C, OV, or N bits, then the write to these five bits is disabled. These bits are set or cleared according to the device logic. Therefore, the result of an instruction with the STATUS register as destination may be different than intended.

For example, `CLRF STATUS` will clear the upper three bits and set the Z bit. This leaves the STATUS register as `000u u1uu` (where `u` = unchanged).

It is recommended, therefore, that only `BCF, BSF, SWAPF, MOVFF` and `MOVWF` instructions are used to alter the STATUS register, because these instructions do not affect the `Z, C, DC, OV,` or `N` bits from the STATUS register. For other instructions not affecting any status bits, see Table 20-2.

> **Note:** The C and DC bits operate as a $\overline{\text{borrow}}$ and $\overline{\text{digit borrow}}$ bit respectively, in subtraction.

**REGISTER 4-2: STATUS REGISTER**

| U-0 | U-0 | U-0 | R/W-x | R/W-x | R/W-x | R/W-x | R/W-x |
|---|---|---|---|---|---|---|---|
| — | — | — | N | OV | Z | DC | C |
| bit 7 | | | | | | | bit 0 |

bit 7-5 **Unimplemented:** Read as '0'

bit 4 **N:** Negative bit
This bit is used for signed arithmetic (2's complement). It indicates whether the result was negative (ALU MSB = 1).
`1` = Result was negative
`0` = Result was positive

bit 3 **OV:** Overflow bit
This bit is used for signed arithmetic (2's complement). It indicates an overflow of the 7-bit magnitude, which causes the sign bit (bit7) to change state.
`1` = Overflow occurred for signed arithmetic (in this arithmetic operation)
`0` = No overflow occurred

bit 2 **Z:** Zero bit
`1` = The result of an arithmetic or logic operation is zero
`0` = The result of an arithmetic or logic operation is not zero

bit 1 **DC:** Digit carry/$\overline{\text{borrow}}$ bit
For `ADDWF, ADDLW, SUBLW`, and `SUBWF` instructions
`1` = A carry-out from the 4th low order bit of the result occurred
`0` = No carry-out from the 4th low order bit of the result

**Note:** For $\overline{\text{borrow}}$, the polarity is reversed. A subtraction is executed by adding the two's complement of the second operand. For rotate (`RRF, RLF`) instructions, this bit is loaded with either the bit 4 or bit 3 of the source register.

bit 0 **C:** Carry/$\overline{\text{borrow}}$ bit
For `ADDWF, ADDLW, SUBLW`, and `SUBWF` instructions
`1` = A carry-out from the Most Significant bit of the result occurred
`0` = No carry-out from the Most Significant bit of the result occurred

**Note:** For $\overline{\text{borrow}}$, the polarity is reversed. A subtraction is executed by adding the two's complement of the second operand. For rotate (`RRF, RLF`) instructions, this bit is loaded with either the high or low order bit of the source register.

| Legend: | | | |
|---|---|---|---|
| R = Readable bit | W = Writable bit | U = Unimplemented bit, read as '0' | |
| - n = Value at POR | '1' = Bit is set | '0' = Bit is cleared | x = Bit is unknown |


© 2006 Microchip Technology Inc.

## 4.14 RCON Register

The Reset Control (RCON) register contains flag bits that allow differentiation between the sources of a device RESET. These flags include the $\overline{TO}$, $\overline{PD}$, $\overline{POR}$, $\overline{BOR}$ and $\overline{RI}$ bits. This register is readable and writable.

> **Note 1:** If the BOREN configuration bit is set (Brown-out Reset enabled), the $\overline{BOR}$ bit is '1' on a Power-on Reset. After a Brown-out Reset has occurred, the BOR bit will be cleared, and must be set by firmware to indicate the occurrence of the next Brown-out Reset.
>
> **2:** It is recommended that the $\overline{POR}$ bit be set after a Power-on Reset has been detected, so that subsequent Power-on Resets may be detected.

**REGISTER 4-3: RCON REGISTER**

| R/W-0 | U-0 | U-0 | R/W-1 | R-1 | R-1 | R/W-0 | R/W-0 |
|---|---|---|---|---|---|---|---|
| IPEN | — | — | $\overline{RI}$ | $\overline{TO}$ | $\overline{PD}$ | $\overline{POR}$ | $\overline{BOR}$ |
| bit 7 | | | | | | | bit 0 |

bit 7 **IPEN:** Interrupt Priority Enable bit
1 = Enable priority levels on interrupts
0 = Disable priority levels on interrupts (16CXXX Compatibility mode)

bit 6-5 **Unimplemented:** Read as '0'

bit 4 **$\overline{RI}$:** RESET Instruction Flag bit
1 = The RESET instruction was not executed
0 = The RESET instruction was executed causing a device RESET (must be set in software after a Brown-out Reset occurs)

bit 3 **$\overline{TO}$:** Watchdog Time-out Flag bit
1 = After power-up, CLRWDT instruction, or SLEEP instruction
0 = A WDT time-out occurred

bit 2 **$\overline{PD}$:** Power-down Detection Flag bit
1 = After power-up or by the CLRWDT instruction
0 = By execution of the SLEEP instruction

bit 1 **$\overline{POR}$:** Power-on Reset Status bit
1 = A Power-on Reset has not occurred
0 = A Power-on Reset occurred (must be set in software after a Power-on Reset occurs)

bit 0 **$\overline{BOR}$:** Brown-out Reset Status bit
1 = A Brown-out Reset has not occurred
0 = A Brown-out Reset occurred (must be set in software after a Brown-out Reset occurs)

| Legend: | | | |
|---|---|---|---|
| R = Readable bit | W = Writable bit | U = Unimplemented bit, read as '0' | |
| - n = Value at POR | '1' = Bit is set | '0' = Bit is cleared | x = Bit is unknown |

**NOTES:**


© 2006 Microchip Technology Inc.

## 5.0 FLASH PROGRAM MEMORY

The FLASH Program Memory is readable, writable, and erasable during normal operation over the entire VDD range.

A read from program memory is executed on one byte at a time. A write to program memory is executed on blocks of 8 bytes at a time. Program memory is erased in blocks of 64 bytes at a time. A bulk erase operation may not be issued from user code.

Writing or erasing program memory will cease instruction fetches until the operation is complete. The program memory cannot be accessed during the write or erase, therefore, code cannot execute. An internal programming timer terminates program memory writes and erases.

A value written to program memory does not need to be a valid instruction. Executing a program memory location that forms an invalid instruction results in a NOP.

### 5.1 Table Reads and Table Writes

In order to read and write program memory, there are two operations that allow the processor to move bytes between the program memory space and the data RAM:

- Table Read (TBLRD)
- Table Write (TBLWT)

The program memory space is 16-bits wide, while the data RAM space is 8-bits wide. Table Reads and Table Writes move data between these two memory spaces through an 8-bit register (TABLAT).

Table Read operations retrieve data from program memory and places it into the data RAM space. Figure 5-1 shows the operation of a Table Read with program memory and data RAM.

Table Write operations store data from the data memory space into holding registers in program memory. The procedure to write the contents of the holding registers into program memory is detailed in Section 5.5, '"Writing to FLASH Program Memory". Figure 5-2 shows the operation of a Table Write with program memory and data RAM.

Table operations work with byte entities. A table block containing data, rather than program instructions, is not required to be word aligned. Therefore, a table block can start and end at any byte address. If a Table Write is being used to write executable code into program memory, program instructions will need to be word aligned.

**FIGURE 5-1: TABLE READ OPERATION**

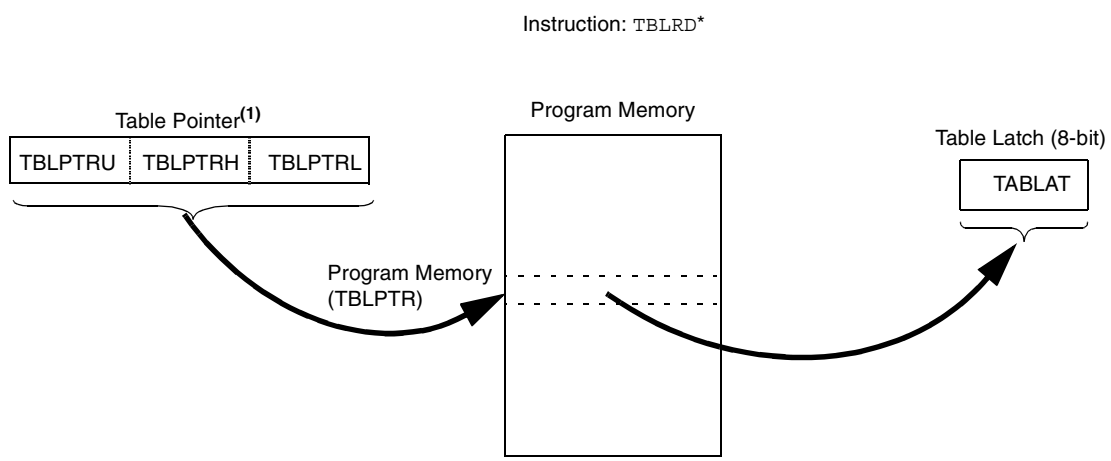


**Note 1:** Table Pointer points to a byte in program memory.

**FIGURE 5-2: TABLE WRITE OPERATION**

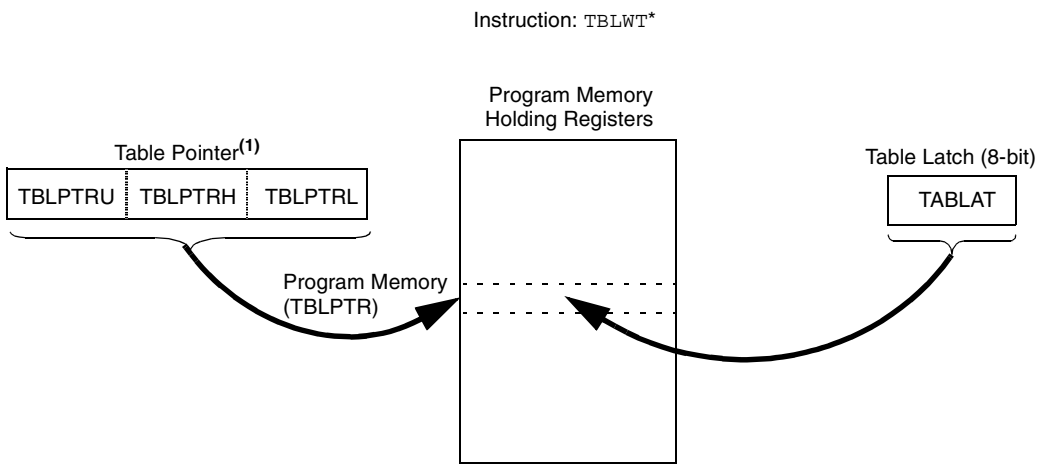


**Note 1:** Table Pointer actually points to one of eight holding registers, the address of which is determined by TBLPTRL<2:0>. The process for physically writing data to the Program Memory Array is discussed in Section 5.5.

## 5.2 Control Registers

Several control registers are used in conjunction with the TBLRD and TBLWT instructions. These include the:

- EECON1 register
- EECON2 register
- TABLAT register
- TBLPTR registers

### 5.2.1 EECON1 AND EECON2 REGISTERS

EECON1 is the control register for memory accesses.

EECON2 is not a physical register. Reading EECON2 will read all '0's. The EECON2 register is used exclusively in the memory write and erase sequences.

Control bit EEPGD determines if the access will be a program or data EEPROM memory access. When clear, any subsequent operations will operate on the data EEPROM memory. When set, any subsequent operations will operate on the program memory.

Control bit CFGS determines if the access will be to the configuration registers or to program memory/data EEPROM memory. When set, subsequent operations will operate on configuration registers, regardless of EEPGD (see “Special Features of the CPU”, Section 19.0). When clear, memory selection access is determined by EEPGD.

The FREE bit, when set, will allow a program memory erase operation. When the FREE bit is set, the erase operation is initiated on the next WR command. When FREE is clear, only writes are enabled.

The WREN bit, when set, will allow a write operation. On power-up, the WREN bit is clear. The WRERR bit is set when a write operation is interrupted by a $\overline{\text{MCLR}}$ Reset or a WDT Time-out Reset during normal operation. In these situations, the user can check the WRERR bit and rewrite the location. It is necessary to reload the data and address registers (EEDATA and EEADR), due to RESET values of zero.

Control bit WR initiates write operations. This bit cannot be cleared, only set, in software. It is cleared in hardware at the completion of the write operation. The inability to clear the WR bit in software prevents the accidental or premature termination of a write operation.

| **Note:** | Interrupt flag bit EEIF, in the PIR2 register, is set when the write is complete. It must be cleared in software. |
|---|---|


© 2006 Microchip Technology Inc.

**REGISTER 5-1: EECON1 REGISTER (ADDRESS FA6h)**

| R/W-x | R/W-x | U-0 | R/W-0 | R/W-x | R/W-0 | R/S-0 | R/S-0 |
|---|---|---|---|---|---|---|---|
| EEPGD | CFGS | — | FREE | WRERR | WREN | WR | RD |
| bit 7 | | | | | | | bit 0 |

bit 7 **EEPGD:** FLASH Program or Data EEPROM Memory Select bit
1 = Access FLASH Program memory
0 = Access Data EEPROM memory

bit 6 **CFGS:** FLASH Program/Data EE or Configuration Select bit
1 = Access Configuration registers
0 = Access FLASH Program or Data EEPROM memory

bit 5 **Unimplemented:** Read as '0'

bit 4 **FREE:** FLASH Row Erase Enable bit
1 = Erase the program memory row addressed by TBLPTR on the next WR command (cleared by completion of erase operation)
0 = Perform write only

bit 3 **WRERR:** FLASH Program/Data EE Error Flag bit
1 = A write operation is prematurely terminated (any RESET during self-timed programming in normal operation)
0 = The write operation completed

**Note:** When a WRERR occurs, the EEPGD and CFGS bits are not cleared. This allows tracing of the error condition.

bit 2 **WREN:** FLASH Program/Data EE Write Enable bit
1 = Allows write cycles
0 = Inhibits write to the EEPROM

bit 1 **WR:** Write Control bit
1 = Initiates a data EEPROM erase/write cycle or a program memory erase cycle or write cycle. (The operation is self timed and the bit is cleared by hardware once write is complete. The WR bit can only be set (not cleared) in software.)
0 = Write cycle to the EEPROM is complete

bit 0 **RD:** Read Control bit
1 = Initiates an EEPROM read (Read takes one cycle. RD is cleared in hardware. The RD bit can only be set (not cleared) in software. RD bit cannot be set when EEPGD = 1.)
0 = Does not initiate an EEPROM read

| Legend: | | | |
|---|---|---|---|
| R = Readable bit | W = Writable bit | U = Unimplemented bit, read as ‘0’ | |
| - n = Value at POR | ’1’ = Bit is set | ’0’ = Bit is cleared | x = Bit is unknown |

### 5.2.2 TABLAT - TABLE LATCH REGISTER

The Table Latch (TABLAT) is an 8-bit register mapped into the SFR space. The Table Latch is used to hold 8-bit data during data transfers between program memory and data RAM.

### 5.2.3 TBLPTR - TABLE POINTER REGISTER

The Table Pointer (TBLPTR) addresses a byte within the program memory. The TBLPTR is comprised of three SFR registers: Table Pointer Upper Byte, Table Pointer High Byte and Table Pointer Low Byte (TBLPTRU:TBLPTRH:TBLPTRL). These three registers join to form a 22-bit wide pointer. The low order 21 bits allow the device to address up to 2 Mbytes of program memory space. The 22nd bit allows access to the Device ID, the User ID and the Configuration bits.

The table pointer, TBLPTR, is used by the `TBLRD` and `TBLWT` instructions. These instructions can update the TBLPTR in one of four ways based on the table operation. These operations are shown in Table 5-1. These operations on the TBLPTR only affect the low order 21 bits.

### 5.2.4 TABLE POINTER BOUNDARIES

TBLPTR is used in reads, writes, and erases of the FLASH program memory.

When a `TBLRD` is executed, all 22 bits of the Table Pointer determine which byte is read from program memory into TABLAT.

When a `TBLWT` is executed, the three LSbs of the Table Pointer (TBLPTR<2:0>) determine which of the eight program memory holding registers is written to. When the timed write to program memory (long write) begins, the 19 MSbs of the Table Pointer, TBLPTR (TBLPTR<21:3>), will determine which program memory block of 8 bytes is written to. For more detail, see Section 5.5 (“Writing to FLASH Program Memory”).

When an erase of program memory is executed, the 16 MSbs of the Table Pointer (TBLPTR<21:6>) point to the 64-byte block that will be erased. The Least Significant bits (TBLPTR<5:0>) are ignored.

Figure 5-3 describes the relevant boundaries of TBLPTR based on FLASH program memory operations.

**TABLE 5-1: TABLE POINTER OPERATIONS WITH `TBLRD` AND `TBLWT` INSTRUCTIONS**

| Example | Operation on Table Pointer |
|---|---|
| `TBLRD*`<br>`TBLWT*` | TBLPTR is not modified |
| `TBLRD*+`<br>`TBLWT*+` | TBLPTR is incremented after the read/write |
| `TBLRD*-`<br>`TBLWT*-` | TBLPTR is decremented after the read/write |
| `TBLRD+*`<br>`TBLWT+*` | TBLPTR is incremented before the read/write |

**FIGURE 5-3: TABLE POINTER BOUNDARIES BASED ON OPERATION**

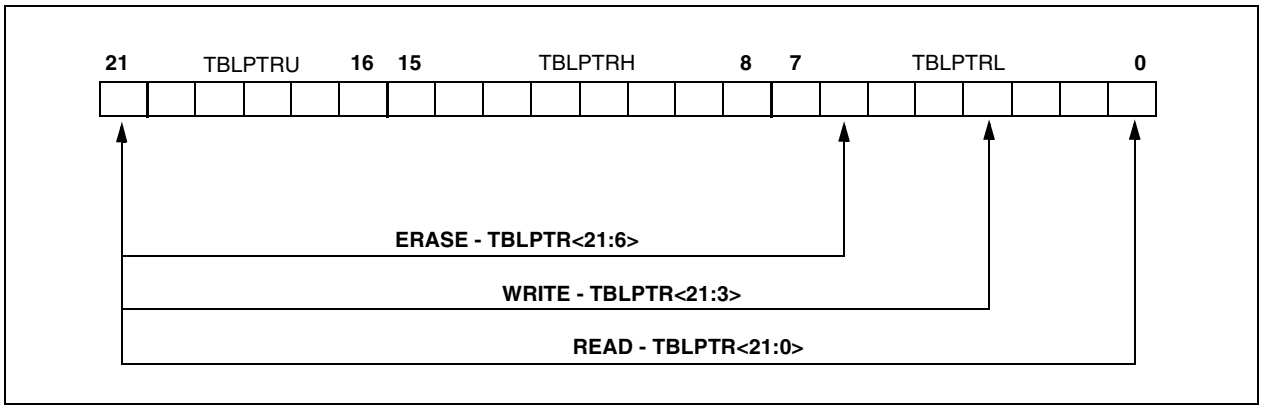



© 2006 Microchip Technology Inc.

## 5.3 Reading the FLASH Program Memory

The TBLRD instruction is used to retrieve data from program memory and place into data RAM. Table Reads from program memory are performed one byte at a time.

TBLPTR points to a byte address in program space. Executing TBLRD places the byte pointed to into TABLAT. In addition, TBLPTR can be modified automatically for the next Table Read operation.

The internal program memory is typically organized by words. The Least Significant bit of the address selects between the high and low bytes of the word. Figure 5-4 shows the interface between the internal program memory and the TABLAT.

**FIGURE 5-4: READS FROM FLASH PROGRAM MEMORY**

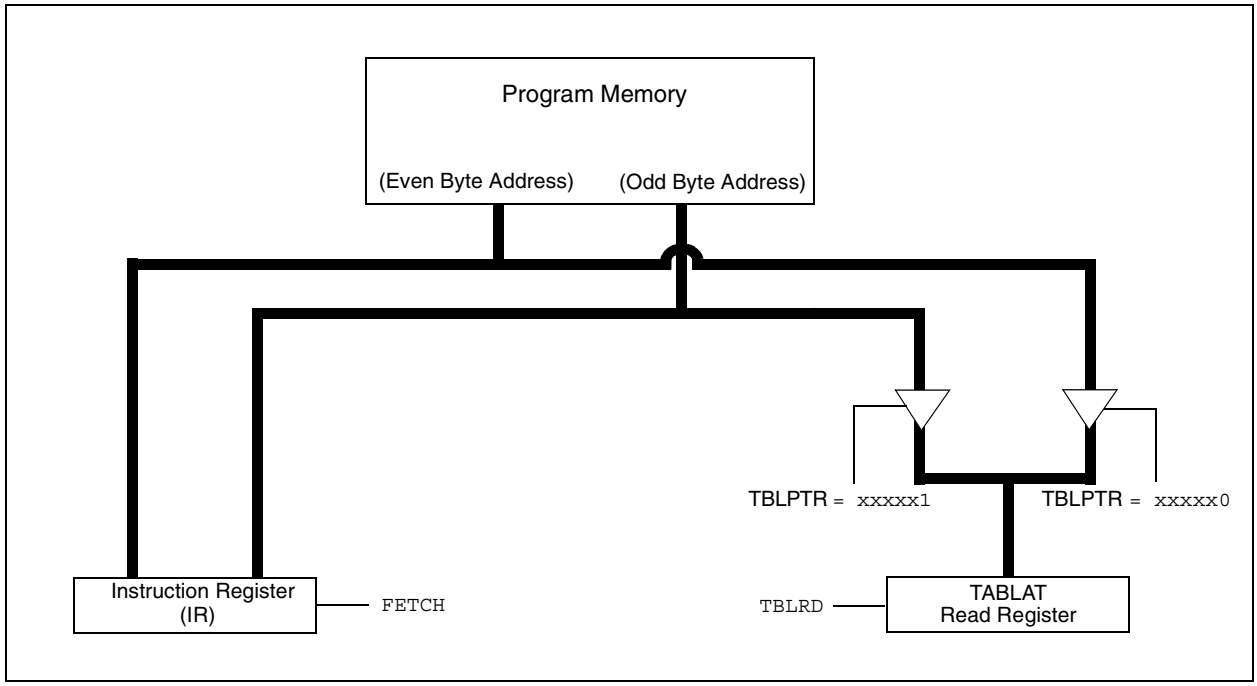


**EXAMPLE 5-1: READING A FLASH PROGRAM MEMORY WORD**

```
            MOVLW CODE_ADDR_UPPER         ; Load TBLPTR with the base
            MOVWF TBLPTRU                 ; address of the word
            MOVLW CODE_ADDR_HIGH
            MOVWF TBLPTRH
            MOVLW CODE_ADDR_LOW
            MOVWF TBLPTRL
READ_WORD
            TBLRD*+                       ; read into TABLAT and increment
            MOVF TABLAT, W                ; get data
            MOVWF WORD_EVEN
            TBLRD*+                       ; read into TABLAT and increment
            MOVF TABLAT, W                ; get data
            MOVWF WORD_ODD
```

## 5.4 Erasing FLASH Program memory

The minimum erase block is 32 words or 64 bytes. Only through the use of an external programmer, or through ICSP control can larger blocks of program memory be bulk erased. Word erase in the FLASH array is not supported.

When initiating an erase sequence from the microcontroller itself, a block of 64 bytes of program memory is erased. The Most Significant 16 bits of the TBLPTR<21:6> point to the block being erased. TBLPTR<5:0> are ignored.

The EECON1 register commands the erase operation. The EEPGD bit must be set to point to the FLASH program memory. The WREN bit must be set to enable write operations. The FREE bit is set to select an erase operation.

For protection, the write initiate sequence for EECON2 must be used.

A long write is necessary for erasing the internal FLASH. Instruction execution is halted while in a long write cycle. The long write will be terminated by the internal programming timer.

### 5.4.1 FLASH PROGRAM MEMORY ERASE SEQUENCE

The sequence of events for erasing a block of internal program memory location is:

1. Load table pointer with address of row being erased.
2. Set EEPGD bit to point to program memory, clear CFGS bit to access program memory, set WREN bit to enable writes, and set FREE bit to enable the erase.
3. Disable interrupts.
4. Write 55h to EECON2.
5. Write AAh to EECON2.
6. Set the WR bit. This will begin the row erase cycle.
7. The CPU will stall for duration of the erase (about 2 ms using internal timer).
8. Re-enable interrupts.

**EXAMPLE 5-2: ERASING A FLASH PROGRAM MEMORY ROW**

```
                MOVLW   CODE_ADDR_UPPER       ; load TBLPTR with the base
                MOVWF   TBLPTRU               ; address of the memory block
                MOVLW   CODE_ADDR_HIGH
                MOVWF   TBLPTRH
                MOVLW   CODE_ADDR_LOW
                MOVWF   TBLPTRL
      ERASE_ROW
                BSF     EECON1,EEPGD          ; point to FLASH program memory
                BCF     EECON1,CFGS           ; access FLASH program memory
                BSF     EECON1,WREN           ; enable write to memory
                BSF     EECON1,FREE           ; enable Row Erase operation
                BCF     INTCON,GIE            ; disable interrupts
                MOVLW   55h
  Required      MOVWF   EECON2                ; write 55h
  Sequence      MOVLW   AAh
                MOVWF   EECON2                ; write AAh
                BSF     EECON1,WR             ; start erase (CPU stall)
                BSF     INTCON,GIE            ; re-enable interrupts
```


© 2006 Microchip Technology Inc.

## 5.5 Writing to FLASH Program Memory

The minimum programming block is 4 words or 8 bytes. Word or byte programming is not supported.

Table Writes are used internally to load the holding registers needed to program the FLASH memory. There are 8 holding registers used by the Table Writes for programming.

Since the Table Latch (TABLAT) is only a single byte, the `TBLWT` instruction has to be executed 8 times for each programming operation. All of the Table Write operations will essentially be short writes, because only the holding registers are written. At the end of updating 8 registers, the EECON1 register must be written to, to start the programming operation with a long write.

The long write is necessary for programming the internal FLASH. Instruction execution is halted while in a long write cycle. The long write will be terminated by the internal programming timer.

The EEPROM on-chip timer controls the write time. The write/erase voltages are generated by an on-chip charge pump rated to operate over the voltage range of the device for byte or word operations.

**FIGURE 5-5: TABLE WRITES TO FLASH PROGRAM MEMORY**

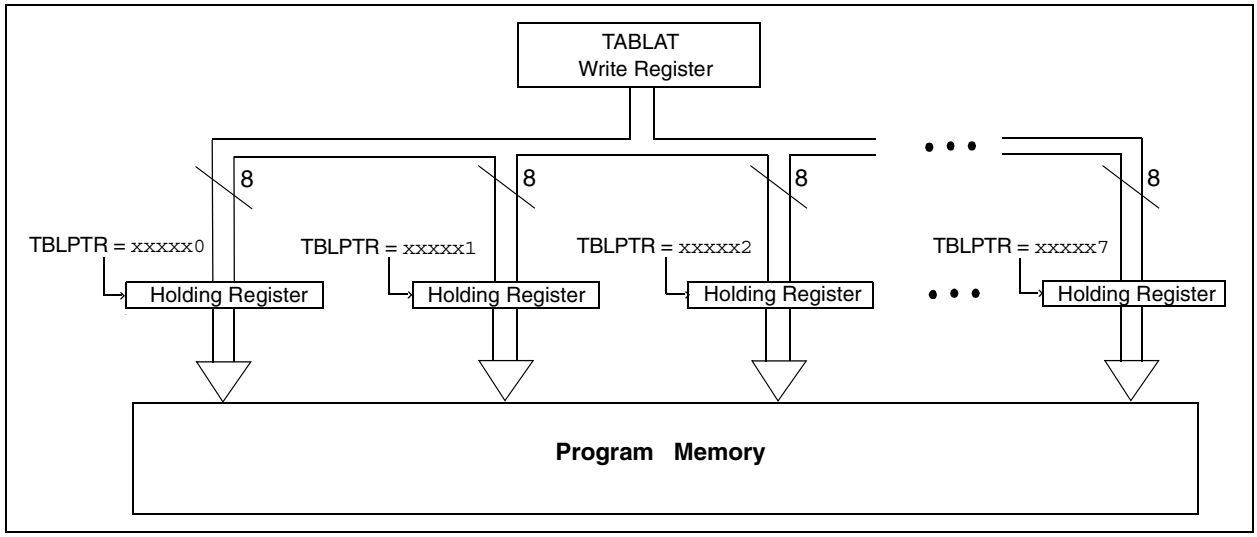


### 5.5.1 FLASH PROGRAM MEMORY WRITE SEQUENCE

The sequence of events for programming an internal program memory location should be:

1. Read 64 bytes into RAM.
2. Update data values in RAM as necessary.
3. Load Table Pointer with address being erased.
4. Do the row erase procedure.
5. Load Table Pointer with address of first byte being written.
6. Write the first 8 bytes into the holding registers with auto-increment (`TBLWT*+` or `TBLWT+*`).
7. Set EEPGD bit to point to program memory, clear the CFGS bit to access program memory, and set WREN to enable byte writes.
8. Disable interrupts.
9. Write 55h to EECON2.
10. Write AAh to EECON2.
11. Set the WR bit. This will begin the write cycle.
12. The CPU will stall for duration of the write (about 2 ms using internal timer).
13. Re-enable interrupts.
14. Repeat steps 6-14 seven times, to write 64 bytes.
15. Verify the memory (Table Read).

This procedure will require about 18 ms to update one row of 64 bytes of memory. An example of the required code is given in Example 5-3.

| | |
|---|---|
| **Note:** | Before setting the WR bit, the table pointer address needs to be within the intended address range of the 8 bytes in the holding registers. |

**EXAMPLE 5-3: WRITING TO FLASH PROGRAM MEMORY**

```
            MOVLW   D'64                        ; number of bytes in erase block
            MOVWF   COUNTER
            MOVLW   BUFFER_ADDR_HIGH            ; point to buffer
            MOVWF   FSR0H
            MOVLW   BUFFER_ADDR_LOW
            MOVWF   FSR0L
            MOVLW   CODE_ADDR_UPPER             ; Load TBLPTR with the base
            MOVWF   TBLPTRU                     ; address of the memory block
            MOVLW   CODE_ADDR_HIGH
            MOVWF   TBLPTRH
            MOVLW   CODE_ADDR_LOW
            MOVWF   TBLPTRL
READ_BLOCK
            TBLRD*+                             ; read into TABLAT, and inc
            MOVF    TABLAT, W                   ; get data
            MOVWF   POSTINC0                    ; store data
            DECFSZ  COUNTER                     ; done?
            BRA     READ_BLOCK                  ; repeat
MODIFY_WORD
            MOVLW   DATA_ADDR_HIGH              ; point to buffer
            MOVWF   FSR0H
            MOVLW   DATA_ADDR_LOW
            MOVWF   FSR0L
            MOVLW   NEW_DATA_LOW                ; update buffer word
            MOVWF   POSTINC0
            MOVLW   NEW_DATA_HIGH
            MOVWF   INDF0
ERASE_BLOCK
            MOVLW   CODE_ADDR_UPPER             ; load TBLPTR with the base
            MOVWF   TBLPTRU                     ; address of the memory block
            MOVLW   CODE_ADDR_HIGH
            MOVWF   TBLPTRH
            MOVLW   CODE_ADDR_LOW
            MOVWF   TBLPTRL
            BSF     EECON1,EEPGD                ; point to FLASH program memory
            BCF     EECON1,CFGS                 ; access FLASH program memory
            BSF     EECON1,WREN                 ; enable write to memory
            BSF     EECON1,FREE                 ; enable Row Erase operation
            BCF     INTCON,GIE                  ; disable interrupts
            MOVLW   55h
            MOVWF   EECON2                      ; write 55h
            MOVLW   AAh
            MOVWF   EECON2                      ; write AAh
            BSF     EECON1,WR                   ; start erase (CPU stall)
            BSF     INTCON,GIE                  ; re-enable interrupts
            TBLRD*-                             ; dummy read decrement
WRITE_BUFFER_BACK
            MOVLW   8                           ; number of write buffer groups of 8 bytes
            MOVWF   COUNTER_HI
            MOVLW   BUFFER_ADDR_HIGH            ; point to buffer
            MOVWF   FSR0H
            MOVLW   BUFFER_ADDR_LOW
            MOVWF   FSR0L
PROGRAM_LOOP
            MOVLW   8                           ; number of bytes in holding register
            MOVWF   COUNTER
WRITE_WORD_TO_HREGS
            MOVF    POSTINC0, W                 ; get low byte of buffer data
            MOVWF   TABLAT                      ; present data to table latch
            TBLWT+*                             ; write data, perform a short write
                                                ; to internal TBLWT holding register.
            DECFSZ  COUNTER                     ; loop until buffers are full
            BRA     WRITE_WORD_TO_HREGS
```


© 2006 Microchip Technology Inc.

**EXAMPLE 5-3: WRITING TO FLASH PROGRAM MEMORY (CONTINUED)**

```
PROGRAM_MEMORY
            BSF     EECON1,EEPGD          ; point to FLASH program memory
            BCF     EECON1,CFGS           ; access FLASH program memory
            BSF     EECON1,WREN           ; enable write to memory
            BCF     INTCON,GIE            ; disable interrupts
            MOVLW   55h
Required    MOVWF   EECON2                ; write 55h
Sequence    MOVLW   AAh
            MOVWF   EECON2                ; write AAh
            BSF     EECON1,WR             ; start program (CPU stall)
            BSF     INTCON,GIE            ; re-enable interrupts
            DECFSZ  COUNTER_HI            ; loop until done
            BRA     PROGRAM_LOOP
            BCF     EECON1,WREN           ; disable write to memory
```

### 5.5.2 WRITE VERIFY

Depending on the application, good programming practice may dictate that the value written to the memory should be verified against the original value. This should be used in applications where excessive writes can stress bits near the specification limit.

### 5.5.3 UNEXPECTED TERMINATION OF WRITE OPERATION

If a write is terminated by an unplanned event, such as loss of power or an unexpected RESET, the memory location just programmed should be verified and reprogrammed if needed.The WRERR bit is set when a write operation is interrupted by a $\overline{\text{MCLR}}$ Reset, or a WDT Time-out Reset during normal operation. In these situations, users can check the WRERR bit and rewrite the location.

### 5.5.4 PROTECTION AGAINST SPURIOUS WRITES

To protect against spurious writes to FLASH program memory, the write initiate sequence must also be followed. See “Special Features of the CPU” (Section 19.0) for more detail.

## 5.6 FLASH Program Operation During Code Protection

See “Special Features of the CPU” (Section 19.0) for details on code protection of FLASH program memory.

**TABLE 5-2: REGISTERS ASSOCIATED WITH PROGRAM FLASH MEMORY**

| Address | Name | Bit 7 | Bit 6 | Bit 5 | Bit 4 | Bit 3 | Bit 2 | Bit 1 | Bit 0 | Value on: POR, BOR | Value on All Other RESETS |
|---|---|---|---|---|---|---|---|---|---|---|---|
| FF8h | TBLPTRU | — | — | bit21 | Program Memory Table Pointer Upper Byte (TBLPTR<20:16>) | | | | | --00 0000 | --00 0000 |
| FF7h | TBPLTRH | Program Memory Table Pointer High Byte (TBLPTR<15:8>) | | | | | | | | 0000 0000 | 0000 0000 |
| FF6h | TBLPTRL | Program Memory Table Pointer High Byte (TBLPTR<7:0>) | | | | | | | | 0000 0000 | 0000 0000 |
| FF5h | TABLAT | Program Memory Table Latch | | | | | | | | 0000 0000 | 0000 0000 |
| FF2h | INTCON | GIE/ GIEH | PEIE/ GIEL | TMR0IE | INTE | RBIE | TMR0IF | INTF | RBIF | 0000 000x | 0000 000u |
| FA7h | EECON2 | EEPROM Control Register2 (not a physical register) | | | | | | | | — | — |
| FA6h | EECON1 | EEPGD | CFGS | — | FREE | WRERR | WREN | WR | RD | xx-0 x000 | uu-0 u000 |
| FA2h | IPR2 | — | — | — | EEIP | BCLIP | LVDIP | TMR3IP | CCP2IP | ---1 1111 | ---1 1111 |
| FA1h | PIR2 | — | — | — | EEIF | BCLIF | LVDIF | TMR3IF | CCP2IF | ---0 0000 | ---0 0000 |
| FA0h | PIE2 | — | — | — | EEIE | BCLIE | LVDIE | TMR3IE | CCP2IE | ---0 0000 | ---0 0000 |

Legend: x = unknown, u = unchanged, r = reserved, - = unimplemented read as '0'.
Shaded cells are not used during FLASH/EEPROM access.

**NOTES:**


© 2006 Microchip Technology Inc.

## 6.0 DATA EEPROM MEMORY

The Data EEPROM is readable and writable during normal operation over the entire VDD range. The data memory is not directly mapped in the register file space. Instead, it is indirectly addressed through the Special Function Registers (SFR).

There are four SFRs used to read and write the program and data EEPROM memory. These registers are:

- EECON1
- EECON2
- EEDATA
- EEADR

The EEPROM data memory allows byte read and write. When interfacing to the data memory block, EEDATA holds the 8-bit data for read/write and EEADR holds the address of the EEPROM location being accessed. These devices have 256 bytes of data EEPROM with an address range from 0h to FFh.

The EEPROM data memory is rated for high erase/write cycles. A byte write automatically erases the location and writes the new data (erase-before-write). The write time is controlled by an on-chip timer. The write time will vary with voltage and temperature, as well as from chip to chip. Please refer to parameter D122 (Electrical Characteristics, Section 22.0) for exact limits.

### 6.1 EEADR

The address register can address up to a maximum of 256 bytes of data EEPROM.

### 6.2 EECON1 and EECON2 Registers

EECON1 is the control register for EEPROM memory accesses.

EECON2 is not a physical register. Reading EECON2 will read all '0's. The EECON2 register is used exclusively in the EEPROM write sequence.

Control bits RD and WR initiate read and write operations, respectively. These bits cannot be cleared, only set, in software. They are cleared in hardware at the completion of the read or write operation. The inability to clear the WR bit in software prevents the accidental or premature termination of a write operation.

The WREN bit, when set, will allow a write operation. On power-up, the WREN bit is clear. The WRERR bit is set when a write operation is interrupted by a $\overline{\text{MCLR}}$ Reset, or a WDT Time-out Reset during normal operation. In these situations, the user can check the WRERR bit and rewrite the location. It is necessary to reload the data and address registers (EEDATA and EEADR), due to the RESET condition forcing the contents of the registers to zero.

| | |
|---|---|
| **Note:** | Interrupt flag bit, EEIF in the PIR2 register, is set when write is complete. It must be cleared in software. |

**REGISTER 6-1: EECON1 REGISTER (ADDRESS FA6h)**

| R/W-x | R/W-x | U-0 | R/W-0 | R/W-x | R/W-0 | R/S-0 | R/S-0 |
|---|---|---|---|---|---|---|---|
| EEPGD | CFGS | — | FREE | WRERR | WREN | WR | RD |
| bit 7 | | | | | | | bit 0 |

bit 7 **EEPGD:** FLASH Program or Data EEPROM Memory Select bit
1 = Access FLASH Program memory
0 = Access Data EEPROM memory

bit 6 **CFGS:** FLASH Program/Data EE or Configuration Select bit
1 = Access Configuration or Calibration registers
0 = Access FLASH Program or Data EEPROM memory

bit 5 **Unimplemented:** Read as '0'

bit 4 **FREE:** FLASH Row Erase Enable bit
1 = Erase the program memory row addressed by TBLPTR on the next WR command (cleared by completion of erase operation)
0 = Perform write only

bit 3 **WRERR:** FLASH Program/Data EE Error Flag bit
1 = A write operation is prematurely terminated (any $\overline{\text{MCLR}}$ or any WDT Reset during self-timed programming in normal operation)
0 = The write operation completed

**Note:** When a WRERR occurs, the EEPGD or FREE bits are not cleared. This allows tracing of the error condition.

bit 2 **WREN:** FLASH Program/Data EE Write Enable bit
1 = Allows write cycles
0 = Inhibits write to the EEPROM

bit 1 **WR:** Write Control bit
1 = Initiates a data EEPROM erase/write cycle or a program memory erase cycle or write cycle. (The operation is self-timed and the bit is cleared by hardware once write is complete. The WR bit can only be set (not cleared) in software.)
0 = Write cycle to the EEPROM is complete

bit 0 **RD:** Read Control bit
1 = Initiates an EEPROM read (Read takes one cycle. RD is cleared in hardware. The RD bit can only be set (not cleared) in software. RD bit cannot be set when EEPGD = 1.)
0 = Does not initiate an EEPROM read

| Legend: | | | |
|---|---|---|---|
| R = Readable bit | W = Writable bit | U = Unimplemented bit, read as ‘0’ | |
| - n = Value at POR | ’1’ = Bit is set | ’0’ = Bit is cleared | x = Bit is unknown |


© 2006 Microchip Technology Inc.

## 6.3 Reading the Data EEPROM Memory

To read a data memory location, the user must write the address to the EEADR register, clear the EEPGD control bit (EECON1<7>), clear the CFGS control bit (EECON1<6>), and then set control bit RD (EECON1<0>). The data is available for the very next instruction cycle; therefore, the EEDATA register can be read by the next instruction. EEDATA will hold this value until another read operation, or until it is written to by the user (during a write operation).

**EXAMPLE 6-1: DATA EEPROM READ**

```
MOVLW   DATA_EE_ADDR   ;
MOVWF   EEADR          ; Data Memory Address to read
BCF     EECON1, EEPGD  ; Point to DATA memory
BCF     EECON1, CFGS   ; Access program FLASH or Data EEPROM memory
BSF     EECON1, RD     ; EEPROM Read
MOVF    EEDATA, W      ; W = EEDATA
```

## 6.4 Writing to the Data EEPROM Memory

To write an EEPROM data location, the address must first be written to the EEADR register and the data written to the EEDATA register. Then the sequence in Example 6-2 must be followed to initiate the write cycle.

The write will not initiate if the above sequence is not exactly followed (write 55h to EECON2, write AAh to EECON2, then set WR bit) for each byte. It is strongly recommended that interrupts be disabled during this code segment.

Additionally, the WREN bit in EECON1 must be set to enable writes. This mechanism prevents accidental writes to data EEPROM due to unexpected code execution (i.e., runaway programs). The WREN bit should be kept clear at all times, except when updating the EEPROM. The WREN bit is not cleared by hardware.

After a write sequence has been initiated, EECON1, EEADR and EDATA cannot be modified. The WR bit will be inhibited from being set unless the WREN bit is set. The WREN bit must be set on a previous instruction. Both WR and WREN cannot be set with the same instruction.

At the completion of the write cycle, the WR bit is cleared in hardware and the EEPROM Write Complete Interrupt Flag bit (EEIF) is set. The user may either enable this interrupt, or poll this bit. EEIF must be cleared by software.

**EXAMPLE 6-2: DATA EEPROM WRITE**

```
            MOVLW   DATA_EE_ADDR   ;
            MOVWF   EEADR          ; Data Memory Address to read
            MOVLW   DATA_EE_DATA   ;
            MOVWF   EEDATA         ; Data Memory Value to write
            BCF     EECON1, EEPGD  ; Point to DATA memory
            BCF     EECON1, CFGS   ; Access program FLASH or Data EEPROM memory
            BSF     EECON1, WREN   ; Enable writes


            BCF     INTCON, GIE    ; Disable interrupts
Required    MOVLW   55h            ;
Sequence    MOVWF   EECON2         ; Write 55h
            MOVLW   AAh            ;
            MOVWF   EECON2         ; Write AAh
            BSF     EECON1, WR     ; Set WR bit to begin write
            BSF     INTCON, GIE    ; Enable interrupts


            .                      ; user code execution
            .
            .
            BCF     EECON1, WREN   ; Disable writes on write complete (EEIF set)
```

## 6.5 Write Verify

Depending on the application, good programming practice may dictate that the value written to the memory should be verified against the original value. This should be used in applications where excessive writes can stress bits near the specification limit.

## 6.6 Protection Against Spurious Write

There are conditions when the device may not want to write to the data EEPROM memory. To protect against spurious EEPROM writes, various mechanisms have been built-in. On power-up, the WREN bit is cleared. Also, the Power-up Timer (72 ms duration) prevents EEPROM write.

The write initiate sequence and the WREN bit together help prevent an accidental write during brown-out, power glitch, or software malfunction.

## 6.7 Operation During Code Protect

Data EEPROM memory has its own code protect mechanism. External Read and Write operations are disabled if either of these mechanisms are enabled.

The microcontroller itself can both read and write to the internal Data EEPROM, regardless of the state of the code protect configuration bit. Refer to “Special Features of the CPU” (Section 19.0) for additional information.

## 6.8 Using the Data EEPROM

The data EEPROM is a high endurance, byte addressable array that has been optimized for the storage of frequently changing information (e.g., program variables or other data that are updated often). Frequently changing values will typically be updated more often than specification D124. If this is not the case, an array refresh must be performed. For this reason, variables that change infrequently (such as constants, IDs, calibration, etc.) should be stored in FLASH program memory.

A simple data EEPROM refresh routine is shown in Example 6-3.

| **Note:** | If data EEPROM is only used to store constants and/or data that changes rarely, an array refresh is likely not required. See specification D124. |
|---|---|

**EXAMPLE 6-3: DATA EEPROM REFRESH ROUTINE**

```
        clrf    EEADR                   ; Start at address 0
        bcf     EECON1,CFGS             ; Set for memory
        bcf     EECON1,EEPGD            ; Set for Data EEPROM
        bcf     INTCON,GIE              ; Disable interrupts
        bsf     EECON1,WREN             ; Enable writes
Loop                                    ; Loop to refresh array
        bsf     EECON1,RD               ; Read current address
        movlw   55h                     ;
        movwf   EECON2                  ; Write 55h
        movlw   AAh                     ;
        movwf   EECON2                  ; Write AAh
        bsf     EECON1,WR               ; Set WR bit to begin write
        btfsc   EECON1,WR               ; Wait for write to complete
        bra     $-2
        incfsz  EEADR,F                 ; Increment address
        bra     Loop                    ; Not zero, do it again

        bcf     EECON1,WREN             ; Disable writes
        bsf     INTCON,GIE              ; Enable interrupts
```


© 2006 Microchip Technology Inc.

**TABLE 6-1: REGISTERS ASSOCIATED WITH DATA EEPROM MEMORY**

| Address | Name | Bit 7 | Bit 6 | Bit 5 | Bit 4 | Bit 3 | Bit 2 | Bit 1 | Bit 0 | Value on: POR, BOR | Value on All Other RESETS |
|---|---|---|---|---|---|---|---|---|---|---|---|
| FF2h | INTCON | GIE/ GIEH | PEIE/ GIEL | T0IE | INTE | RBIE | T0IF | INTF | RBIF | 0000 000x | 0000 000u |
| FA9h | EEADR | EEPROM Address Register | | | | | | | | 0000 0000 | 0000 0000 |
| FA8h | EEDATA | EEPROM Data Register | | | | | | | | 0000 0000 | 0000 0000 |
| FA7h | EECON2 | EEPROM Control Register2 (not a physical register) | | | | | | | | — | — |
| FA6h | EECON1 | EEPGD | CFGS | — | FREE | WRERR | WREN | WR | RD | xx-0 x000 | uu-0 u000 |
| FA2h | IPR2 | — | — | — | EEIP | BCLIP | LVDIP | TMR3IP | CCP2IP | ---1 1111 | ---1 1111 |
| FA1h | PIR2 | — | — | — | EEIF | BCLIF | LVDIF | TMR3IF | CCP2IF | ---0 0000 | ---0 0000 |
| FA0h | PIE2 | — | — | — | EEIE | BCLIE | LVDIE | TMR3IE | CCP2IE | ---0 0000 | ---0 0000 |

Legend: x = unknown, u = unchanged, r = reserved, - = unimplemented, read as '0'.
Shaded cells are not used during FLASH/EEPROM access.

**NOTES:**


© 2006 Microchip Technology Inc.

# 7.0 8 X 8 HARDWARE MULTIPLIER

## 7.1 Introduction

An 8 x 8 hardware multiplier is included in the ALU of the PIC18FXX2 devices. By making the multiply a hardware operation, it completes in a single instruction cycle. This is an unsigned multiply that gives a 16-bit result. The result is stored into the 16-bit product register pair (PRODH:PRODL). The multiplier does not affect any flags in the ALUSTA register.

Making the 8 x 8 multiplier execute in a single cycle gives the following advantages:

- Higher computational throughput
- Reduces code size requirements for multiply algorithms

The performance increase allows the device to be used in applications previously reserved for Digital Signal Processors.

Table 7-1 shows a performance comparison between enhanced devices using the single cycle hardware multiply, and performing the same function without the hardware multiply.

**TABLE 7-1: PERFORMANCE COMPARISON**

| Routine | Multiply Method | Program Memory (Words) | Cycles (Max) | Time | | |
|---|---|---|---|---|---|---|
| | | | | @ 40 MHz | @ 10 MHz | @ 4 MHz |
| 8 x 8 unsigned | Without hardware multiply | 13 | 69 | 6.9 µs | 27.6 µs | 69 µs |
| | Hardware multiply | 1 | 1 | 100 ns | 400 ns | 1 µs |
| 8 x 8 signed | Without hardware multiply | 33 | 91 | 9.1 µs | 36.4 µs | 91 µs |
| | Hardware multiply | 6 | 6 | 600 ns | 2.4 µs | 6 µs |
| 16 x 16 unsigned | Without hardware multiply | 21 | 242 | 24.2 µs | 96.8 µs | 242 µs |
| | Hardware multiply | 24 | 24 | 2.4 µs | 9.6 µs | 24 µs |
| 16 x 16 signed | Without hardware multiply | 52 | 254 | 25.4 µs | 102.6 µs | 254 µs |
| | Hardware multiply | 36 | 36 | 3.6 µs | 14.4 µs | 36 µs |

## 7.2 Operation

Example 7-1 shows the sequence to do an 8 x 8 unsigned multiply. Only one instruction is required when one argument of the multiply is already loaded in the WREG register.

Example 7-2 shows the sequence to do an 8 x 8 signed multiply. To account for the sign bits of the arguments, each argument's Most Significant bit (MSb) is tested and the appropriate subtractions are done.

**EXAMPLE 7-1: 8 x 8 UNSIGNED MULTIPLY ROUTINE**

```
MOVF     ARG1, W      ;
MULWF    ARG2         ; ARG1 * ARG2 ->
                      ;    PRODH:PRODL
```

**EXAMPLE 7-2: 8 x 8 SIGNED MULTIPLY ROUTINE**

```
MOVF     ARG1,  W
MULWF    ARG2         ; ARG1 * ARG2 ->
                      ; PRODH:PRODL
BTFSC    ARG2,  SB    ; Test Sign Bit
SUBWF    PRODH, F     ; PRODH = PRODH
                      ;          - ARG1
MOVF     ARG2,  W
BTFSC    ARG1,  SB    ; Test Sign Bit
SUBWF    PRODH, F     ; PRODH = PRODH
                        ;          - ARG2
```

Example 7-3 shows the sequence to do a 16 x 16 unsigned multiply. Equation 7-1 shows the algorithm that is used. The 32-bit result is stored in four registers, RES3:RES0.

**EQUATION 7-1: 16 x 16 UNSIGNED MULTIPLICATION ALGORITHM**

$$
\begin{aligned}
RES3:RES0 &= ARG1H:ARG1L \bullet ARG2H:ARG2L \\
&= (ARG1H \bullet ARG2H \bullet 2^{16}) + \\
&\quad (ARG1H \bullet ARG2L \bullet 2^{8}) + \\
&\quad (ARG1L \bullet ARG2H \bullet 2^{8}) + \\
&\quad (ARG1L \bullet ARG2L)
\end{aligned}
$$

**EXAMPLE 7-3: 16 x 16 UNSIGNED MULTIPLY ROUTINE**

```
    MOVF    ARG1L, W
    MULWF   ARG2L         ; ARG1L * ARG2L ->
                          ; PRODH:PRODL
    MOVFF   PRODH, RES1   ;
    MOVFF   PRODL, RES0   ;
;
    MOVF    ARG1H, W
    MULWF   ARG2H         ; ARG1H * ARG2H ->
                          ; PRODH:PRODL
    MOVFF   PRODH, RES3   ;
    MOVFF   PRODL, RES2   ;
;
    MOVF    ARG1L, W
    MULWF   ARG2H         ; ARG1L * ARG2H ->
                          ; PRODH:PRODL
    MOVF    PRODL, W      ;
    ADDWF   RES1,  F      ; Add cross
    MOVF    PRODH, W      ; products
    ADDWFC  RES2,  F      ;
    CLRF    WREG          ;
    ADDWFC  RES3,  F      ;
;
    MOVF    ARG1H, W      ;
    MULWF   ARG2L         ; ARG1H * ARG2L ->
                          ; PRODH:PRODL
    MOVF    PRODL, W      ;
    ADDWF   RES1,  F      ; Add cross
    MOVF    PRODH, W      ; products
    ADDWFC  RES2,  F      ;
    CLRF    WREG          ;
    ADDWFC  RES3,  F      ;
```

Example 7-4 shows the sequence to do a 16 x 16 signed multiply. Equation 7-2 shows the algorithm used. The 32-bit result is stored in four registers, RES3:RES0. To account for the sign bits of the arguments, each argument pairs Most Significant bit (MSb) is tested and the appropriate subtractions are done.

**EQUATION 7-2: 16 x 16 SIGNED MULTIPLICATION ALGORITHM**

RES3:RES0

$$
\begin{aligned}
&= \text{ARG1H:ARG1L} \bullet \text{ARG2H:ARG2L} \\
&= (\text{ARG1H} \bullet \text{ARG2H} \bullet 2^{16}) + \\
&\quad (\text{ARG1H} \bullet \text{ARG2L} \bullet 2^{8}) + \\
&\quad (\text{ARG1L} \bullet \text{ARG2H} \bullet 2^{8}) + \\
&\quad (\text{ARG1L} \bullet \text{ARG2L}) + \\
&\quad (-1 \bullet \text{ARG2H<7>} \bullet \text{ARG1H:ARG1L} \bullet 2^{16}) + \\
&\quad (-1 \bullet \text{ARG1H<7>} \bullet \text{ARG2H:ARG2L} \bullet 2^{16})
\end{aligned}
$$

**EXAMPLE 7-4: 16 x 16 SIGNED MULTIPLY ROUTINE**

```
    MOVF    ARG1L, W
    MULWF   ARG2L         ; ARG1L * ARG2L ->
                          ; PRODH:PRODL
    MOVFF   PRODH, RES1   ;
    MOVFF   PRODL, RES0   ;
;
    MOVF    ARG1H, W
    MULWF   ARG2H         ; ARG1H * ARG2H ->
                          ; PRODH:PRODL
    MOVFF   PRODH, RES3   ;
    MOVFF   PRODL, RES2   ;
;
    MOVF    ARG1L, W
    MULWF   ARG2H         ; ARG1L * ARG2H ->
                          ; PRODH:PRODL
    MOVF    PRODL, W      ;
    ADDWF   RES1,  F      ; Add cross
    MOVF    PRODH, W      ; products
    ADDWFC  RES2,  F      ;
    CLRF    WREG          ;
    ADDWFC  RES3,  F      ;
;
    MOVF    ARG1H, W      ;
    MULWF   ARG2L         ; ARG1H * ARG2L ->
                          ; PRODH:PRODL
    MOVF    PRODL, W      ;
    ADDWF   RES1,  F      ; Add cross
    MOVF    PRODH, W      ; products
    ADDWFC  RES2,  F      ;
    CLRF    WREG          ;
    ADDWFC  RES3,  F      ;
;
    BTFSS   ARG2H, 7      ; ARG2H:ARG2L neg?
    BRA     SIGN_ARG1     ; no, check ARG1
    MOVF    ARG1L, W      ;
    SUBWF   RES2          ;
    MOVF    ARG1H, W      ;
    SUBWFB  RES3
;
SIGN_ARG1
    BTFSS   ARG1H, 7      ; ARG1H:ARG1L neg?
    BRA     CONT_CODE     ; no, done
    MOVF    ARG2L, W      ;
    SUBWF   RES2          ;
    MOVF    ARG2H, W      ;
    SUBWFB  RES3
;
CONT_CODE
      :
```


© 2006 Microchip Technology Inc.

## 8.0 INTERRUPTS

The PIC18FXX2 devices have multiple interrupt sources and an interrupt priority feature that allows each interrupt source to be assigned a high priority level or a low priority level. The high priority interrupt vector is at 000008h and the low priority interrupt vector is at 000018h. High priority interrupt events will override any low priority interrupts that may be in progress.

There are ten registers which are used to control interrupt operation. These registers are:

- RCON
- INTCON
- INTCON2
- INTCON3
- PIR1, PIR2
- PIE1, PIE2
- IPR1, IPR2

It is recommended that the Microchip header files supplied with MPLAB® IDE be used for the symbolic bit names in these registers. This allows the assembler/compiler to automatically take care of the placement of these bits within the specified register.

Each interrupt source, except INT0, has three bits to control its operation. The functions of these bits are:

- Flag bit to indicate that an interrupt event occurred
- Enable bit that allows program execution to branch to the interrupt vector address when the flag bit is set
- Priority bit to select high priority or low priority

The interrupt priority feature is enabled by setting the IPEN bit (RCON<7>). When interrupt priority is enabled, there are two bits which enable interrupts globally. Setting the GIEH bit (INTCON<7>) enables all interrupts that have the priority bit set. Setting the GIEL bit (INTCON<6>) enables all interrupts that have the priority bit cleared. When the interrupt flag, enable bit and appropriate global interrupt enable bit are set, the interrupt will vector immediately to address 000008h or 000018h, depending on the priority level. Individual interrupts can be disabled through their corresponding enable bits.

When the IPEN bit is cleared (default state), the interrupt priority feature is disabled and interrupts are compatible with PICmicro® mid-range devices. In Compatibility mode, the interrupt priority bits for each source have no effect. INTCON<6> is the PEIE bit, which enables/disables all peripheral interrupt sources. INTCON<7> is the GIE bit, which enables/disables all interrupt sources. All interrupts branch to address 000008h in Compatibility mode.

When an interrupt is responded to, the Global Interrupt Enable bit is cleared to disable further interrupts. If the IPEN bit is cleared, this is the GIE bit. If interrupt priority levels are used, this will be either the GIEH or GIEL bit. High priority interrupt sources can interrupt a low priority interrupt.

The return address is pushed onto the stack and the PC is loaded with the interrupt vector address (000008h or 000018h). Once in the Interrupt Service Routine, the source(s) of the interrupt can be determined by polling the interrupt flag bits. The interrupt flag bits must be cleared in software before re-enabling interrupts to avoid recursive interrupts.

The “return from interrupt” instruction, `RETFIE`, exits the interrupt routine and sets the GIE bit (GIEH or GIEL if priority levels are used), which re-enables interrupts.

For external interrupt events, such as the INT pins or the PORTB input change interrupt, the interrupt latency will be three to four instruction cycles. The exact latency is the same for one or two-cycle instructions. Individual interrupt flag bits are set, regardless of the status of their corresponding enable bit or the GIE bit.

| | |
|---|---|
| **Note:** | Do not use the `MOVFF` instruction to modify any of the Interrupt control registers while **any** interrupt is enabled. Doing so may cause erratic microcontroller behavior. |

**FIGURE 8-1: INTERRUPT LOGIC**

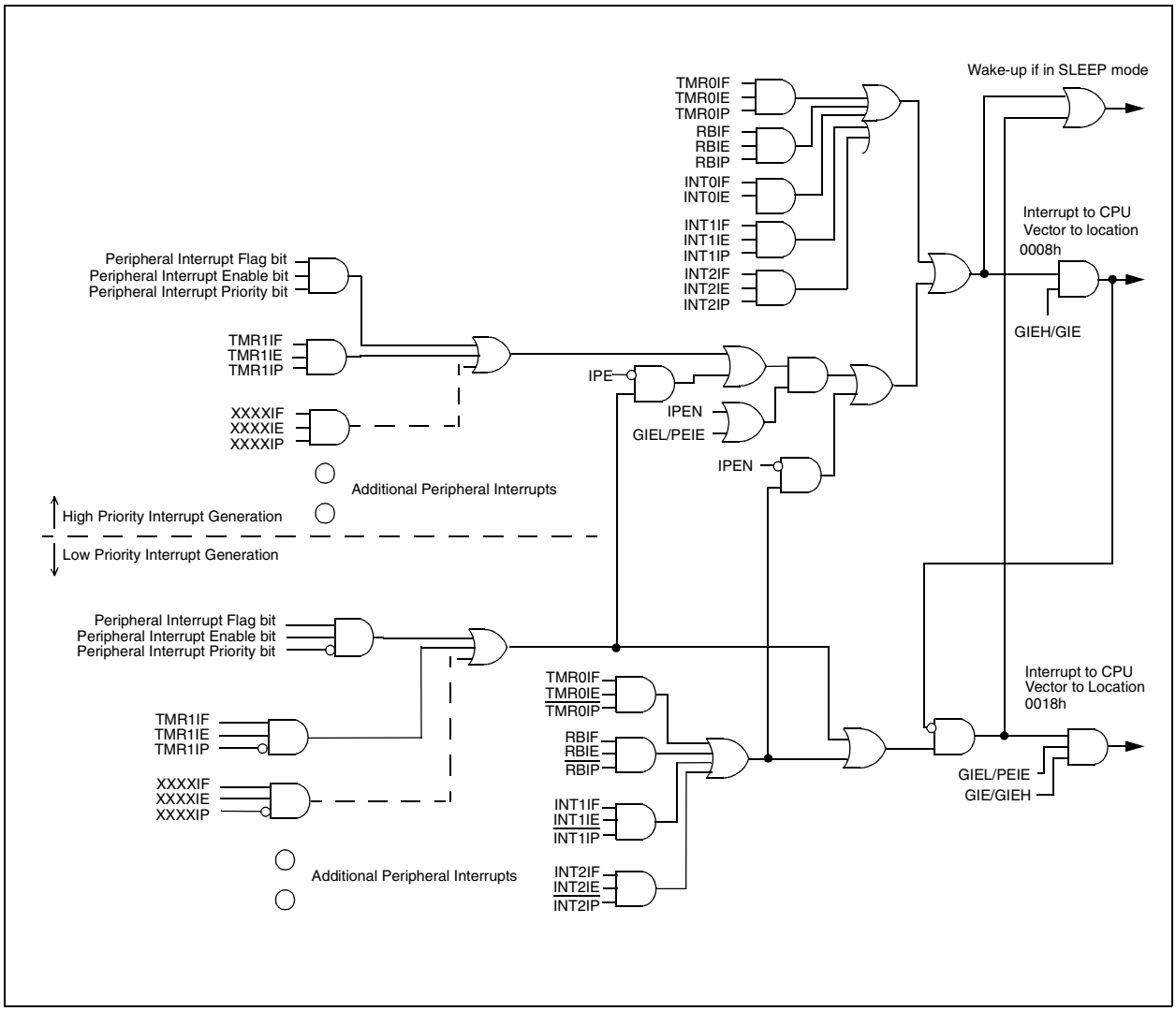



© 2006 Microchip Technology Inc.

## 8.1 INTCON Registers

The INTCON Registers are readable and writable registers, which contain various enable, priority and flag bits.

> **Note:** Interrupt flag bits are set when an interrupt condition occurs, regardless of the state of its corresponding enable bit or the global enable bit. User software should ensure the appropriate interrupt flag bits are clear prior to enabling an interrupt. This feature allows for software polling.

**REGISTER 8-1: INTCON REGISTER**

| R/W-0 | R/W-0 | R/W-0 | R/W-0 | R/W-0 | R/W-0 | R/W-0 | R/W-x |
|---|---|---|---|---|---|---|---|
| GIE/GIEH | PEIE/GIEL | TMR0IE | INT0IE | RBIE | TMR0IF | INT0IF | RBIF |
| bit 7 | | | | | | | bit 0 |

bit 7 **GIE/GIEH:** Global Interrupt Enable bit
When IPEN = 0:
1 = Enables all unmasked interrupts
0 = Disables all interrupts
When IPEN = 1:
1 = Enables all high priority interrupts
0 = Disables all interrupts

bit 6 **PEIE/GIEL:** Peripheral Interrupt Enable bit
When IPEN = 0:
1 = Enables all unmasked peripheral interrupts
0 = Disables all peripheral interrupts
When IPEN = 1:
1 = Enables all low priority peripheral interrupts
0 = Disables all low priority peripheral interrupts

bit 5 **TMR0IE:** TMR0 Overflow Interrupt Enable bit
1 = Enables the TMR0 overflow interrupt
0 = Disables the TMR0 overflow interrupt

bit 4 **INT0IE:** INT0 External Interrupt Enable bit
1 = Enables the INT0 external interrupt
0 = Disables the INT0 external interrupt

bit 3 **RBIE:** RB Port Change Interrupt Enable bit
1 = Enables the RB port change interrupt
0 = Disables the RB port change interrupt

bit 2 **TMR0IF:** TMR0 Overflow Interrupt Flag bit
1 = TMR0 register has overflowed (must be cleared in software)
0 = TMR0 register did not overflow

bit 1 **INT0IF:** INT0 External Interrupt Flag bit
1 = The INT0 external interrupt occurred (must be cleared in software)
0 = The INT0 external interrupt did not occur

bit 0 **RBIF:** RB Port Change Interrupt Flag bit
1 = At least one of the RB7:RB4 pins changed state (must be cleared in software)
0 = None of the RB7:RB4 pins have changed state

**Note:** A mismatch condition will continue to set this bit. Reading PORTB will end the mismatch condition and allow the bit to be cleared.

| Legend: | | | |
|---|---|---|---|
| R = Readable bit | W = Writable bit | U = Unimplemented bit, read as ‘0’ | |
| - n = Value at POR | ’1’ = Bit is set | ’0’ = Bit is cleared | x = Bit is unknown |

**REGISTER 8-2: INTCON2 REGISTER**

| R/W-1 | R/W-1 | R/W-1 | R/W-1 | U-0 | R/W-1 | U-0 | R/W-1 |
|---|---|---|---|---|---|---|---|
| RBPU | INTEDG0 | INTEDG1 | INTEDG2 | — | TMR0IP | — | RBIP |
| bit 7 | | | | | | | bit 0 |

bit 7 **$\overline{\text{RBPU}}$**: PORTB Pull-up Enable bit
1 = All PORTB pull-ups are disabled
0 = PORTB pull-ups are enabled by individual port latch values

bit 6 **INTEDG0**:External Interrupt0 Edge Select bit
1 = Interrupt on rising edge
0 = Interrupt on falling edge

bit 5 **INTEDG1**: External Interrupt1 Edge Select bit
1 = Interrupt on rising edge
0 = Interrupt on falling edge

bit 4 **INTEDG2**: External Interrupt2 Edge Select bit
1 = Interrupt on rising edge
0 = Interrupt on falling edge

bit 3 **Unimplemented:** Read as '0'

bit 2 **TMR0IP**: TMR0 Overflow Interrupt Priority bit
1 = High priority
0 = Low priority

bit 1 **Unimplemented:** Read as '0'

bit 0 **RBIP**: RB Port Change Interrupt Priority bit
1 = High priority
0 = Low priority

| Legend: | | | |
|---|---|---|---|
| R = Readable bit | W = Writable bit | U = Unimplemented bit, read as ‘0’ | |
| - n = Value at POR | ’1’ = Bit is set | ’0’ = Bit is cleared | x = Bit is unknown |

**Note:** Interrupt flag bits are set when an interrupt condition occurs, regardless of the state of its corresponding enable bit or the global enable bit. User software should ensure the appropriate interrupt flag bits are clear prior to enabling an interrupt. This feature allows for software polling.


© 2006 Microchip Technology Inc.

**REGISTER 8-3: INTCON3 REGISTER**

| R/W-1 | R/W-1 | U-0 | R/W-0 | R/W-0 | U-0 | R/W-0 | R/W-0 |
|---|---|---|---|---|---|---|---|
| INT2IP | INT1IP | — | INT2IE | INT1IE | — | INT2IF | INT1IF |
| bit 7 | | | | | | | bit 0 |

bit 7 **INT2IP:** INT2 External Interrupt Priority bit
1 = High priority
0 = Low priority

bit 6 **INT1IP:** INT1 External Interrupt Priority bit
1 = High priority
0 = Low priority

bit 5 **Unimplemented:** Read as '0'

bit 4 **INT2IE:** INT2 External Interrupt Enable bit
1 = Enables the INT2 external interrupt
0 = Disables the INT2 external interrupt

bit 3 **INT1IE:** INT1 External Interrupt Enable bit
1 = Enables the INT1 external interrupt
0 = Disables the INT1 external interrupt

bit 2 **Unimplemented:** Read as '0'

bit 1 **INT2IF:** INT2 External Interrupt Flag bit
1 = The INT2 external interrupt occurred (must be cleared in software)
0 = The INT2 external interrupt did not occur

bit 0 **INT1IF:** INT1 External Interrupt Flag bit
1 = The INT1 external interrupt occurred (must be cleared in software)
0 = The INT1 external interrupt did not occur

| Legend: | | | |
|---|---|---|---|
| R = Readable bit | W = Writable bit | U = Unimplemented bit, read as ‘0’ | |
| - n = Value at POR | ’1’ = Bit is set | ’0’ = Bit is cleared | x = Bit is unknown |

**Note:** Interrupt flag bits are set when an interrupt condition occurs, regardless of the state of its corresponding enable bit or the global enable bit. User software should ensure the appropriate interrupt flag bits are clear prior to enabling an interrupt. This feature allows for software polling.

## 8.2 PIR Registers

The PIR registers contain the individual flag bits for the peripheral interrupts. Due to the number of peripheral interrupt sources, there are two Peripheral Interrupt Flag Registers (PIR1, PIR2).

> **Note 1:** Interrupt flag bits are set when an interrupt condition occurs, regardless of the state of its corresponding enable bit or the global enable bit, GIE (INTCON<7>).
>
> **2:** User software should ensure the appropriate interrupt flag bits are cleared prior to enabling an interrupt, and after servicing that interrupt.

**REGISTER 8-4: PIR1: PERIPHERAL INTERRUPT REQUEST (FLAG) REGISTER 1**

| R/W-0 | R/W-0 | R-0 | R-0 | R/W-0 | R/W-0 | R/W-0 | R/W-0 |
|---|---|---|---|---|---|---|---|
| PSPIF(1) | ADIF | RCIF | TXIF | SSPIF | CCP1IF | TMR2IF | TMR1IF |
| bit 7 | | | | | | | bit 0 |

bit 7 **PSPIF(1):** Parallel Slave Port Read/Write Interrupt Flag bit
1 = A read or a write operation has taken place (must be cleared in software)
0 = No read or write has occurred

bit 6 **ADIF**: A/D Converter Interrupt Flag bit
1 = An A/D conversion completed (must be cleared in software)
0 = The A/D conversion is not complete

bit 5 **RCIF**: USART Receive Interrupt Flag bit
1 = The USART receive buffer, RCREG, is full (cleared when RCREG is read)
0 = The USART receive buffer is empty

bit 4 **TXIF**: USART Transmit Interrupt Flag bit (see Section 16.0 for details on TXIF functionality)
1 = The USART transmit buffer, TXREG, is empty (cleared when TXREG is written)
0 = The USART transmit buffer is full

bit 3 **SSPIF**: Master Synchronous Serial Port Interrupt Flag bit
1 = The transmission/reception is complete (must be cleared in software)
0 = Waiting to transmit/receive

bit 2 **CCP1IF**: CCP1 Interrupt Flag bit
Capture mode:
1 = A TMR1 register capture occurred (must be cleared in software)
0 = No TMR1 register capture occurred
Compare mode:
1 = A TMR1 register compare match occurred (must be cleared in software)
0 = No TMR1 register compare match occurred
PWM mode:
Unused in this mode

bit 1 **TMR2IF:** TMR2 to PR2 Match Interrupt Flag bit
1 = TMR2 to PR2 match occurred (must be cleared in software)
0 = No TMR2 to PR2 match occurred

bit 0 **TMR1IF:** TMR1 Overflow Interrupt Flag bit
1 = TMR1 register overflowed (must be cleared in software)
0 = MR1 register did not overflow

**Note 1:** This bit is reserved on PIC18F2X2 devices; always maintain this bit clear.

| Legend: | | | |
|---|---|---|---|
| R = Readable bit | W = Writable bit | U = Unimplemented bit, read as ‘0’ | |
| - n = Value at POR | ’1’ = Bit is set | ’0’ = Bit is cleared | x = Bit is unknown |


© 2006 Microchip Technology Inc.

**REGISTER 8-5: PIR2: PERIPHERAL INTERRUPT REQUEST (FLAG) REGISTER 2**

| U-0 | U-0 | U-0 | R/W-0 | R/W-0 | R/W-0 | R/W-0 | R/W-0 |
|---|---|---|---|---|---|---|---|
| — | — | — | EEIF | BCLIF | LVDIF | TMR3IF | CCP2IF |
| bit 7 | | | | | | | bit 0 |

bit 7-5 **Unimplemented:** Read as '0'

bit 4 **EEIF**: Data EEPROM/FLASH Write Operation Interrupt Flag bit
1 = The Write operation is complete (must be cleared in software)
0 = The Write operation is not complete, or has not been started

bit 3 **BCLIF**: Bus Collision Interrupt Flag bit
1 = A bus collision occurred (must be cleared in software)
0 = No bus collision occurred

bit 2 **LVDIF**: Low Voltage Detect Interrupt Flag bit
1 = A low voltage condition occurred (must be cleared in software)
0 = The device voltage is above the Low Voltage Detect trip point

bit 1 **TMR3IF**: TMR3 Overflow Interrupt Flag bit
1 = TMR3 register overflowed (must be cleared in software)
0 = TMR3 register did not overflow

bit 0 **CCP2IF**: CCPx Interrupt Flag bit
Capture mode:
1 = A TMR1 register capture occurred (must be cleared in software)
0 = No TMR1 register capture occurred
Compare mode:
1 = A TMR1 register compare match occurred (must be cleared in software)
0 = No TMR1 register compare match occurred
PWM mode:
Unused in this mode

| Legend: | | | |
|---|---|---|---|
| R = Readable bit | W = Writable bit | U = Unimplemented bit, read as ‘0’ | |
| - n = Value at POR | ’1’ = Bit is set | ’0’ = Bit is cleared | x = Bit is unknown |

## 8.3 PIE Registers

The PIE registers contain the individual enable bits for the peripheral interrupts. Due to the number of peripheral interrupt sources, there are two Peripheral Interrupt Enable Registers (PIE1, PIE2). When IPEN = 0, the PEIE bit must be set to enable any of these peripheral interrupts.

**REGISTER 8-6: PIE1: PERIPHERAL INTERRUPT ENABLE REGISTER 1**

| R/W-0 | R/W-0 | R/W-0 | R/W-0 | R/W-0 | R/W-0 | R/W-0 | R/W-0 |
|---|---|---|---|---|---|---|---|
| PSPIE(1) | ADIE | RCIE | TXIE | SSPIE | CCP1IE | TMR2IE | TMR1IE |
| bit 7 | | | | | | | bit 0 |

bit 7 **PSPIE(1):** Parallel Slave Port Read/Write Interrupt Enable bit
1 = Enables the PSP read/write interrupt
0 = Disables the PSP read/write interrupt

bit 6 **ADIE**: A/D Converter Interrupt Enable bit
1 = Enables the A/D interrupt
0 = Disables the A/D interrupt

bit 5 **RCIE**: USART Receive Interrupt Enable bit
1 = Enables the USART receive interrupt
0 = Disables the USART receive interrupt

bit 4 **TXIE**: USART Transmit Interrupt Enable bit
1 = Enables the USART transmit interrupt
0 = Disables the USART transmit interrupt

bit 3 **SSPIE**: Master Synchronous Serial Port Interrupt Enable bit
1 = Enables the MSSP interrupt
0 = Disables the MSSP interrupt

bit 2 **CCP1IE**: CCP1 Interrupt Enable bit
1 = Enables the CCP1 interrupt
0 = Disables the CCP1 interrupt

bit 1 **TMR2IE**: TMR2 to PR2 Match Interrupt Enable bit
1 = Enables the TMR2 to PR2 match interrupt
0 = Disables the TMR2 to PR2 match interrupt

bit 0 **TMR1IE**: TMR1 Overflow Interrupt Enable bit
1 = Enables the TMR1 overflow interrupt
0 = Disables the TMR1 overflow interrupt

**Note 1:** This bit is reserved on PIC18F2X2 devices; always maintain this bit clear.

| Legend: | | | |
|---|---|---|---|
| R = Readable bit | W = Writable bit | U = Unimplemented bit, read as ‘0’ | |
| - n = Value at POR | ’1’ = Bit is set | ’0’ = Bit is cleared | x = Bit is unknown |


© 2006 Microchip Technology Inc.

**REGISTER 8-7: PIE2: PERIPHERAL INTERRUPT ENABLE REGISTER 2**

| U-0 | U-0 | U-0 | R/W-0 | R/W-0 | R/W-0 | R/W-0 | R/W-0 |
|---|---|---|---|---|---|---|---|
| — | — | — | EEIE | BCLIE | LVDIE | TMR3IE | CCP2IE |
| bit 7 | | | | | | | bit 0 |

bit 7-5 **Unimplemented:** Read as '0'

bit 4 **EEIE**: Data EEPROM/FLASH Write Operation Interrupt Enable bit
1 = Enabled
0 = Disabled

bit 3 **BCLIE**: Bus Collision Interrupt Enable bit
1 = Enabled
0 = Disabled

bit 2 **LVDIE**: Low Voltage Detect Interrupt Enable bit
1 = Enabled
0 = Disabled

bit 1 **TMR3IE**: TMR3 Overflow Interrupt Enable bit
1 = Enables the TMR3 overflow interrupt
0 = Disables the TMR3 overflow interrupt

bit 0 **CCP2IE**: CCP2 Interrupt Enable bit
1 = Enables the CCP2 interrupt
0 = Disables the CCP2 interrupt

| Legend: | | | |
|---|---|---|---|
| R = Readable bit | W = Writable bit | U = Unimplemented bit, read as ‘0’ | |
| - n = Value at POR | ’1’ = Bit is set | ’0’ = Bit is cleared | x = Bit is unknown |

## 8.4 IPR Registers

The IPR registers contain the individual priority bits for the peripheral interrupts. Due to the number of peripheral interrupt sources, there are two Peripheral Interrupt Priority Registers (IPR1, IPR2). The operation of the priority bits requires that the Interrupt Priority Enable (IPEN) bit be set.

**REGISTER 8-8: IPR1: PERIPHERAL INTERRUPT PRIORITY REGISTER 1**

| R/W-1 | R/W-1 | R/W-1 | R/W-1 | R/W-1 | R/W-1 | R/W-1 | R/W-1 |
|---|---|---|---|---|---|---|---|
| PSPIP(1) | ADIP | RCIP | TXIP | SSPIP | CCP1IP | TMR2IP | TMR1IP |
| bit 7 | | | | | | | bit 0 |

bit 7 **PSPIP(1):** Parallel Slave Port Read/Write Interrupt Priority bit
1 = High priority
0 = Low priority

bit 6 **ADIP**: A/D Converter Interrupt Priority bit
1 = High priority
0 = Low priority

bit 5 **RCIP**: USART Receive Interrupt Priority bit
1 = High priority
0 = Low priority

bit 4 **TXIP**: USART Transmit Interrupt Priority bit
1 = High priority
0 = Low priority

bit 3 **SSPIP**: Master Synchronous Serial Port Interrupt Priority bit
1 = High priority
0 = Low priority

bit 2 **CCP1IP**: CCP1 Interrupt Priority bit
1 = High priority
0 = Low priority

bit 1 **TMR2IP**: TMR2 to PR2 Match Interrupt Priority bit
1 = High priority
0 = Low priority

bit 0 **TMR1IP**: TMR1 Overflow Interrupt Priority bit
1 = High priority
0 = Low priority

**Note 1:** This bit is reserved on PIC18F2X2 devices; always maintain this bit set.

| Legend: | | | |
|---|---|---|---|
| R = Readable bit | W = Writable bit | U = Unimplemented bit, read as ‘0’ | |
| - n = Value at POR | ’1’ = Bit is set | ’0’ = Bit is cleared | x = Bit is unknown |


© 2006 Microchip Technology Inc.

**REGISTER 8-9: IPR2: PERIPHERAL INTERRUPT PRIORITY REGISTER 2**

| U-0 | U-0 | U-0 | R/W-1 | R/W-1 | R/W-1 | R/W-1 | R/W-1 |
|---|---|---|---|---|---|---|---|
| — | — | — | EEIP | BCLIP | LVDIP | TMR3IP | CCP2IP |
| bit 7 | | | | | | | bit 0 |

bit 7-5 **Unimplemented:** Read as '0'

bit 4 **EEIP**: Data EEPROM/FLASH Write Operation Interrupt Priority bit
1 = High priority
0 = Low priority

bit 3 **BCLIP**: Bus Collision Interrupt Priority bit
1 = High priority
0 = Low priority

bit 2 **LVDIP**: Low Voltage Detect Interrupt Priority bit
1 = High priority
0 = Low priority

bit 1 **TMR3IP**: TMR3 Overflow Interrupt Priority bit
1 = High priority
0 = Low priority

bit 0 **CCP2IP**: CCP2 Interrupt Priority bit
1 = High priority
0 = Low priority

| Legend: | | | |
|---|---|---|---|
| R = Readable bit | W = Writable bit | U = Unimplemented bit, read as ‘0’ | |
| - n = Value at POR | ’1’ = Bit is set | ’0’ = Bit is cleared | x = Bit is unknown |

## 8.5 RCON Register

The RCON register contains the bit which is used to enable prioritized interrupts (IPEN).

**REGISTER 8-10: RCON REGISTER**

| R/W-0 | U-0 | U-0 | R/W-1 | R-1 | R-1 | R/W-0 | R/W-0 |
|---|---|---|---|---|---|---|---|
| IPEN | — | — | $\overline{RI}$ | $\overline{TO}$ | $\overline{PD}$ | $\overline{POR}$ | $\overline{BOR}$ |
| bit 7 | | | | | | | bit 0 |

bit 7 **IPEN:** Interrupt Priority Enable bit
`1` = Enable priority levels on interrupts
`0` = Disable priority levels on interrupts (16CXXX Compatibility mode)

bit 6-5 **Unimplemented:** Read as '0'

bit 4 **$\overline{RI}$:** `RESET` Instruction Flag bit
For details of bit operation, see Register 4-3

bit 3 **$\overline{TO}$:** Watchdog Time-out Flag bit
For details of bit operation, see Register 4-3

bit 2 **$\overline{PD}$:** Power-down Detection Flag bit
For details of bit operation, see Register 4-3

bit 1 **$\overline{POR}$:** Power-on Reset Status bit
For details of bit operation, see Register 4-3

bit 0 **$\overline{BOR}$:** Brown-out Reset Status bit
For details of bit operation, see Register 4-3

| Legend: | | | |
|---|---|---|---|
| R = Readable bit | W = Writable bit | U = Unimplemented bit, read as ‘0’ | |
| - n = Value at POR | ’1’ = Bit is set | ’0’ = Bit is cleared | x = Bit is unknown |


© 2006 Microchip Technology Inc.

## 8.6 INT0 Interrupt

External interrupts on the RB0/INT0, RB1/INT1 and RB2/INT2 pins are edge triggered: either rising, if the corresponding INTEDGx bit is set in the INTCON2 register, or falling, if the INTEDGx bit is clear. When a valid edge appears on the RBx/INTx pin, the corresponding flag bit INTxF is set. This interrupt can be disabled by clearing the corresponding enable bit INTxE. Flag bit INTxF must be cleared in software in the Interrupt Service Routine before re-enabling the interrupt. All external interrupts (INT0, INT1 and INT2) can wake-up the processor from SLEEP, if bit INTxE was set prior to going into SLEEP. If the global interrupt enable bit GIE is set, the processor will branch to the interrupt vector following wake-up.

Interrupt priority for INT1 and INT2 is determined by the value contained in the interrupt priority bits, INT1IP (INTCON3<6>) and INT2IP (INTCON3<7>). There is no priority bit associated with INT0. It is always a high priority interrupt source.

## 8.7 TMR0 Interrupt

In 8-bit mode (which is the default), an overflow (FFh → 00h) in the TMR0 register will set flag bit TMR0IF. In 16-bit mode, an overflow (FFFFh → 0000h) in the TMR0H:TMR0L registers will set flag bit TMR0IF. The interrupt can be enabled/disabled by setting/clearing enable bit T0IE (INTCON<5>). Interrupt priority for Timer0 is determined by the value contained in the interrupt priority bit TMR0IP (INTCON2<2>). See Section 10.0 for further details on the Timer0 module.

## 8.8 PORTB Interrupt-on-Change

An input change on PORTB<7:4> sets flag bit RBIF (INTCON<0>). The interrupt can be enabled/disabled by setting/clearing enable bit, RBIE (INTCON<3>). Interrupt priority for PORTB interrupt-on-change is determined by the value contained in the interrupt priority bit, RBIP (INTCON2<0>).

## 8.9 Context Saving During Interrupts

During an interrupt, the return PC value is saved on the stack. Additionally, the WREG, STATUS and BSR registers are saved on the fast return stack. If a fast return from interrupt is not used (See Section 4.3), the user may need to save the WREG, STATUS and BSR registers in software. Depending on the user's application, other registers may also need to be saved. Equation 8-1 saves and restores the WREG, STATUS and BSR registers during an Interrupt Service Routine.

**EXAMPLE 8-1: SAVING STATUS, WREG AND BSR REGISTERS IN RAM**

```
MOVWF   W_TEMP                          ; W_TEMP is in virtual bank
MOVFF   STATUS, STATUS_TEMP             ; STATUS_TEMP located anywhere
MOVFF   BSR,    BSR_TEMP                ; BSR located anywhere
;
; USER ISR CODE
;
MOVFF   BSR_TEMP,   BSR                 ; Restore BSR
MOVF    W_TEMP,     W                   ; Restore WREG
MOVFF   STATUS_TEMP,STATUS              ; Restore STATUS
```

**NOTES:**


© 2006 Microchip Technology Inc.

## 9.0 I/O PORTS

Depending on the device selected, there are either five ports or three ports available. Some pins of the I/O ports are multiplexed with an alternate function from the peripheral features on the device. In general, when a peripheral is enabled, that pin may not be used as a general purpose I/O pin.

Each port has three registers for its operation. These registers are:

- TRIS register (data direction register)
- PORT register (reads the levels on the pins of the device)
- LAT register (output latch)

The data latch (LAT register) is useful for read-modify-write operations on the value that the I/O pins are driving.

### 9.1 PORTA, TRISA and LATA Registers

PORTA is a 7-bit wide, bi-directional port. The corresponding Data Direction register is TRISA. Setting a TRISA bit (= 1) will make the corresponding PORTA pin an input (i.e., put the corresponding output driver in a Hi-Impedance mode). Clearing a TRISA bit (= 0) will make the corresponding PORTA pin an output (i.e., put the contents of the output latch on the selected pin).

Reading the PORTA register reads the status of the pins, whereas writing to it will write to the port latch.

The Data Latch register (LATA) is also memory mapped. Read-modify-write operations on the LATA register reads and writes the latched output value for PORTA.

The RA4 pin is multiplexed with the Timer0 module clock input to become the RA4/T0CKI pin. The RA4/T0CKI pin is a Schmitt Trigger input and an open drain output. All other RA port pins have TTL input levels and full CMOS output drivers.

The other PORTA pins are multiplexed with analog inputs and the analog VREF+ and VREF- inputs. The operation of each pin is selected by clearing/setting the control bits in the ADCON1 register (A/D Control Register1).

| | |
|---|---|
| **Note:** | On a Power-on Reset, RA5 and RA3:RA0 are configured as analog inputs and read as ‘0’. RA6 and RA4 are configured as digital inputs. |

The TRISA register controls the direction of the RA pins, even when they are being used as analog inputs. The user must ensure the bits in the TRISA register are maintained set when using them as analog inputs.

**EXAMPLE 9-1: INITIALIZING PORTA**

```
CLRF PORTA      ; Initialize PORTA by
                ; clearing output
                ; data latches
CLRF LATA       ; Alternate method
                ; to clear output
                ; data latches
MOVLW 0x07      ; Configure A/D
MOVWF ADCON1    ; for digital inputs
MOVLW 0xCF      ; Value used to
                ; initialize data
                ; direction
MOVWF TRISA     ; Set RA<3:0> as inputs
                ; RA<5:4> as outputs
```

**FIGURE 9-1: BLOCK DIAGRAM OF RA3:RA0 AND RA5 PINS**

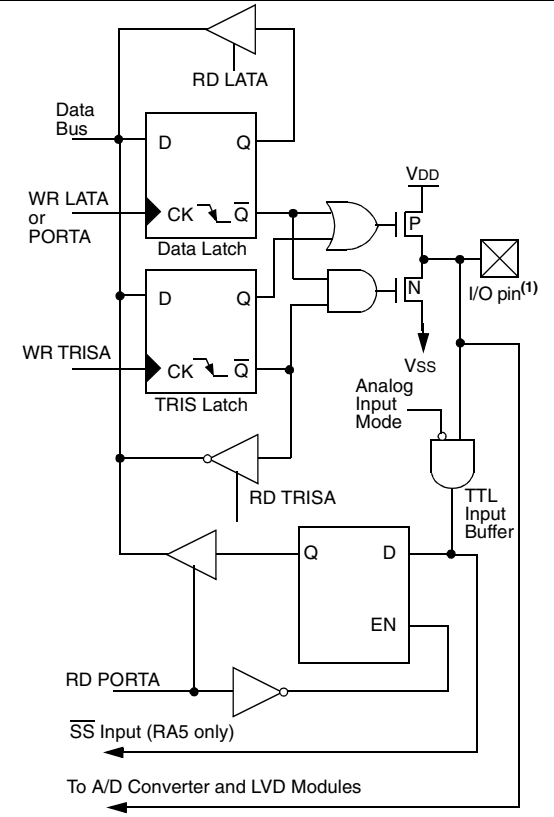


**Note 1:** I/O pins have protection diodes to VDD and VSS.

**FIGURE 9-2: BLOCK DIAGRAM OF RA4/T0CKI PIN**

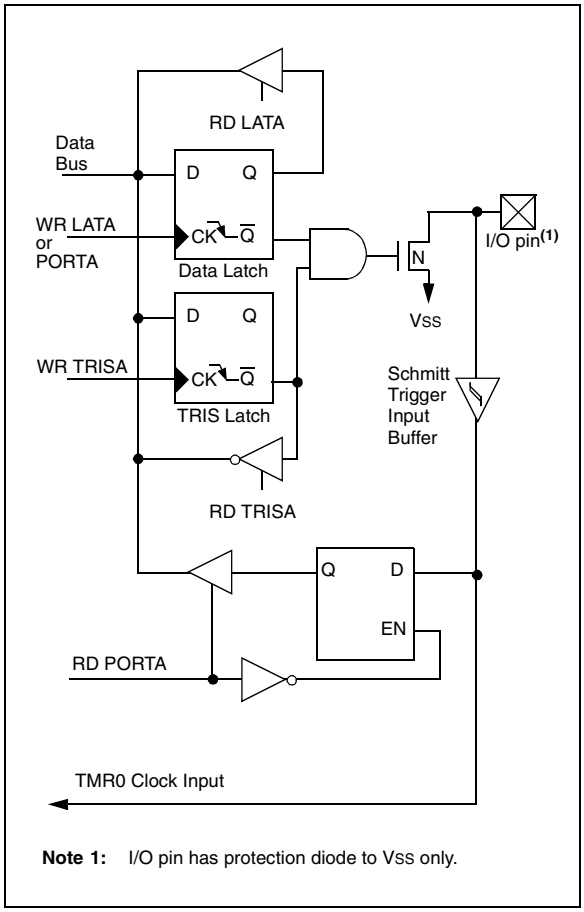


**FIGURE 9-3: BLOCK DIAGRAM OF RA6 PIN**

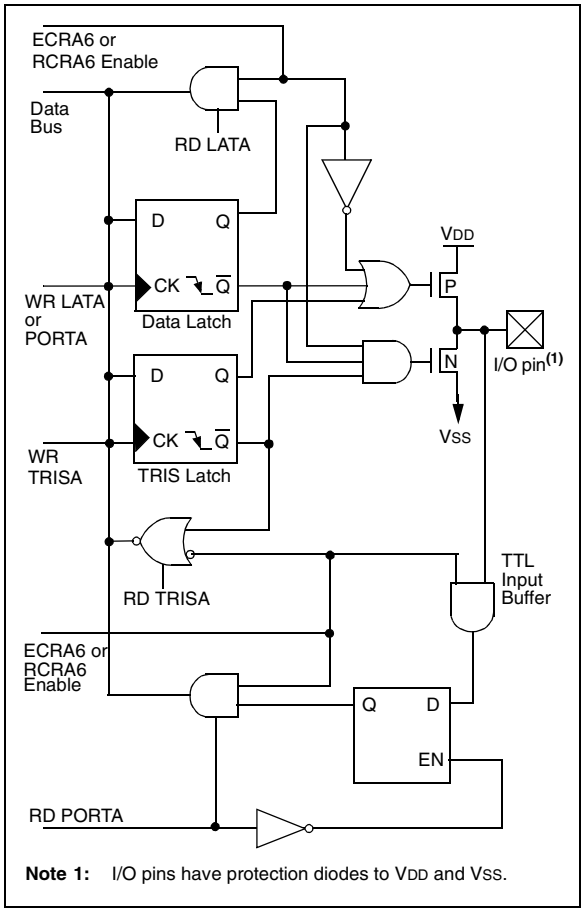



© 2006 Microchip Technology Inc.

**TABLE 9-1: PORTA FUNCTIONS**

| Name | Bit# | Buffer | Function |
|---|---|---|---|
| RA0/AN0 | bit0 | TTL | Input/output or analog input. |
| RA1/AN1 | bit1 | TTL | Input/output or analog input. |
| RA2/AN2/VREF- | bit2 | TTL | Input/output or analog input or VREF-. |
| RA3/AN3/VREF+ | bit3 | TTL | Input/output or analog input or VREF+. |
| RA4/T0CKI | bit4 | ST | Input/output or external clock input for Timer0.<br>Output is open drain type. |
| RA5/$\overline{SS}$/AN4/LVDIN | bit5 | TTL | Input/output or slave select input for synchronous serial port or analog input, or low voltage detect input. |
| OSC2/CLKO/RA6 | bit6 | TTL | OSC2 or clock output or I/O pin. |

Legend: TTL = TTL input, ST = Schmitt Trigger input

**TABLE 9-2: SUMMARY OF REGISTERS ASSOCIATED WITH PORTA**

| Name | Bit 7 | Bit 6 | Bit 5 | Bit 4 | Bit 3 | Bit 2 | Bit 1 | Bit 0 | Value on POR, BOR | Value on All Other RESETS |
|---|---|---|---|---|---|---|---|---|---|---|
| PORTA | — | RA6 | RA5 | RA4 | RA3 | RA2 | RA1 | RA0 | -x0x 0000 | -u0u 0000 |
| LATA | — | LATA Data Output Register | | | | | | | -xxx xxxx | -uuu uuuu |
| TRISA | — | PORTA Data Direction Register | | | | | | | -111 1111 | -111 1111 |
| ADCON1 | ADFM | ADCS2 | — | — | PCFG3 | PCFG2 | PCFG1 | PCFG0 | 00-- 0000 | 00-- 0000 |

Legend: x = unknown, u = unchanged, - = unimplemented locations read as '0'. Shaded cells are not used by PORTA.

## 9.2 PORTB, TRISB and LATB Registers

PORTB is an 8-bit wide, bi-directional port. The corresponding Data Direction register is TRISB. Setting a TRISB bit (= 1) will make the corresponding PORTB pin an input (i.e., put the corresponding output driver in a Hi-Impedance mode). Clearing a TRISB bit (= 0) will make the corresponding PORTB pin an output (i.e., put the contents of the output latch on the selected pin).

The Data Latch register (LATB) is also memory mapped. Read-modify-write operations on the LATB register reads and writes the latched output value for PORTB.

**EXAMPLE 9-2: INITIALIZING PORTB**

```
CLRF   PORTB    ; Initialize PORTB by
                ; clearing output
                ; data latches
CLRF   LATB     ; Alternate method
                ; to clear output
                ; data latches
MOVLW 0xCF      ; Value used to
                ; initialize data
                ; direction
MOVWF TRISB     ; Set RB<3:0> as inputs
                ; RB<5:4> as outputs
                ; RB<7:6> as inputs
```

Each of the PORTB pins has a weak internal pull-up. A single control bit can turn on all the pull-ups. This is performed by clearing bit $\overline{\text{RBPU}}$ (INTCON2<7>). The weak pull-up is automatically turned off when the port pin is configured as an output. The pull-ups are disabled on a Power-on Reset.

> **Note:** On a Power-on Reset, these pins are configured as digital inputs.

Four of the PORTB pins, RB7:RB4, have an interrupt-on-change feature. Only pins configured as inputs can cause this interrupt to occur (i.e., any RB7:RB4 pin configured as an output is excluded from the interrupt-on-change comparison). The input pins (of RB7:RB4) are compared with the old value latched on the last read of PORTB. The “mismatch” outputs of RB7:RB4 are OR’ed together to generate the RB Port Change Interrupt with flag bit, RBIF (INTCON<0>).

This interrupt can wake the device from SLEEP. The user, in the Interrupt Service Routine, can clear the interrupt in the following manner:

a) Any read or write of PORTB (except with the `MOVFF` instruction). This will end the mismatch condition.

b) Clear flag bit RBIF.

A mismatch condition will continue to set flag bit RBIF. Reading PORTB will end the mismatch condition and allow flag bit RBIF to be cleared.

The interrupt-on-change feature is recommended for wake-up on key depression operation and operations where PORTB is only used for the interrupt-on-change feature. Polling of PORTB is not recommended while using the interrupt-on-change feature.

RB3 can be configured by the configuration bit CCP2MX as the alternate peripheral pin for the CCP2 module (CCP2MX=’0’).

**FIGURE 9-4: BLOCK DIAGRAM OF RB7:RB4 PINS**

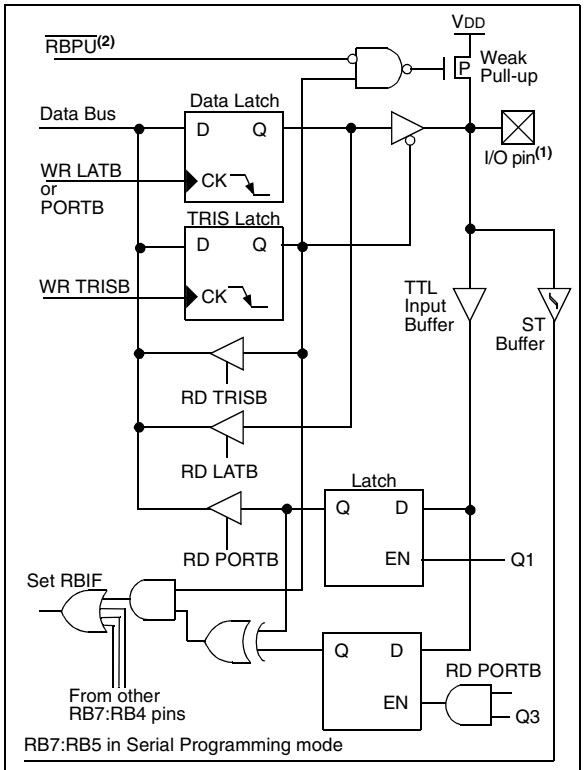


**Note 1:** I/O pins have diode protection to VDD and VSS.

**2:** To enable weak pull-ups, set the appropriate TRIS bit(s) and clear the $\overline{\text{RBPU}}$ bit (INTCON2<7>).

> **Note 1:** While in Low Voltage ICSP mode, the RB5 pin can no longer be used as a general purpose I/O pin, and should be held low during normal operation to protect against inadvertent ICSP mode entry.
>
> **2:** When using Low Voltage ICSP programming (LVP), the pull-up on RB5 becomes disabled. If TRISB bit 5 is cleared, thereby setting RB5 as an output, LATB bit 5 must also be cleared for proper operation.


© 2006 Microchip Technology Inc.

**FIGURE 9-5: BLOCK DIAGRAM OF RB2:RB0 PINS**

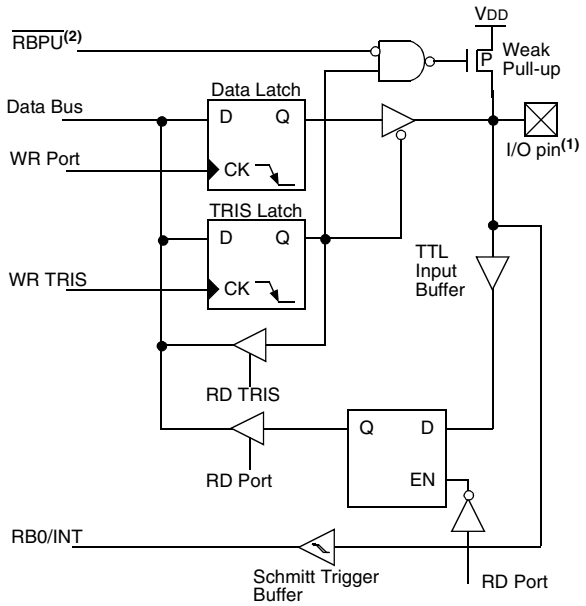


**Note 1:** I/O pins have diode protection to VDD and VSS.
**2:** To enable weak pull-ups, set the appropriate TRIS bit(s) and clear the $\overline{\text{RBPU}}$ bit (OPTION_REG<7>).

**FIGURE 9-6: BLOCK DIAGRAM OF RB3 PIN**

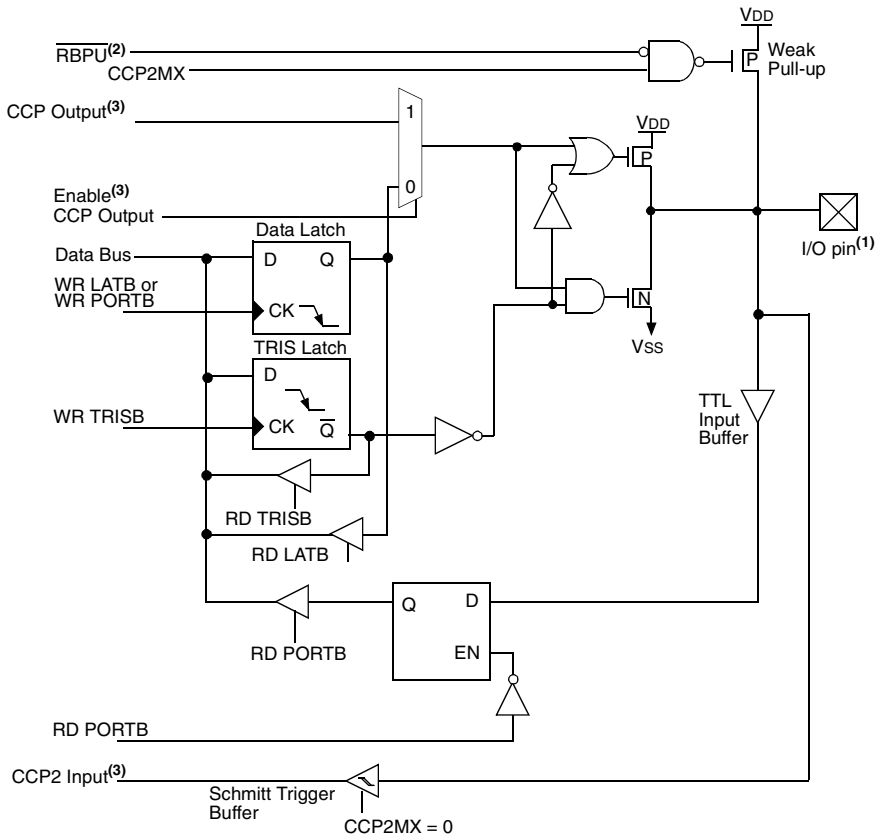


**Note 1:** I/O pin has diode protection to VDD and VSS.
**2:** To enable weak pull-ups, set the appropriate DDR bit(s) and clear the $\overline{\text{RBPU}}$ bit (INTCON2<7>).
**3:** The CCP2 input/output is multiplexed with RB3 if the CCP2MX bit is enabled (='0') in the configuration register.

**TABLE 9-3: PORTB FUNCTIONS**

| Name | Bit# | Buffer | Function |
|---|---|---|---|
| RB0/INT0 | bit0 | TTL/ST(1) | Input/output pin or external interrupt input0.<br>Internal software programmable weak pull-up. |
| RB1/INT1 | bit1 | TTL/ST(1) | Input/output pin or external interrupt input1.<br>Internal software programmable weak pull-up. |
| RB2/INT2 | bit2 | TTL/ST(1) | Input/output pin or external interrupt input2.<br>Internal software programmable weak pull-up. |
| RB3/CCP2(3) | bit3 | TTL/ST(4) | Input/output pin or Capture2 input/Compare2 output/PWM output when CCP2MX configuration bit is enabled.<br>Internal software programmable weak pull-up. |
| RB4 | bit4 | TTL | Input/output pin (with interrupt-on-change).<br>Internal software programmable weak pull-up. |
| RB5/PGM(5) | bit5 | TTL/ST(2) | Input/output pin (with interrupt-on-change).<br>Internal software programmable weak pull-up.<br>Low voltage ICSP enable pin. |
| RB6/PGC | bit6 | TTL/ST(2) | Input/output pin (with interrupt-on-change).<br>Internal software programmable weak pull-up.<br>Serial programming clock. |
| RB7/PGD | bit7 | TTL/ST(2) | Input/output pin (with interrupt-on-change).<br>Internal software programmable weak pull-up.<br>Serial programming data. |

Legend: TTL = TTL input, ST = Schmitt Trigger input

**Note 1:** This buffer is a Schmitt Trigger input when configured as the external interrupt.
**2:** This buffer is a Schmitt Trigger input when used in Serial Programming mode.
**3:** A device configuration bit selects which I/O pin the CCP2 pin is multiplexed on.
**4:** This buffer is a Schmitt Trigger input when configured as the CCP2 input.
**5:** Low Voltage ICSP Programming (LVP) is enabled by default, which disables the RB5 I/O function. LVP must be disabled to enable RB5 as an I/O pin and allow maximum compatibility to the other 28-pin and 40-pin mid-range devices.

**TABLE 9-4: SUMMARY OF REGISTERS ASSOCIATED WITH PORTB**

| Name | Bit 7 | Bit 6 | Bit 5 | Bit 4 | Bit 3 | Bit 2 | Bit 1 | Bit 0 | Value on POR, BOR | Value on All Other RESETS |
|---|---|---|---|---|---|---|---|---|---|---|
| PORTB | RB7 | RB6 | RB5 | RB4 | RB3 | RB2 | RB1 | RB0 | xxxx xxxx | uuuu uuuu |
| LATB | LATB Data Output Register | | | | | | | | xxxx xxxx | uuuu uuuu |
| TRISB | PORTB Data Direction Register | | | | | | | | 1111 1111 | 1111 1111 |
| INTCON | GIE/GIEH | PEIE/GIEL | TMR0IE | INT0IE | RBIE | TMR0IF | INT0IF | RBIF | 0000 000x | 0000 000u |
| INTCON2 | RBPU | INTEDG0 | INTEDG1 | INTEDG2 | — | TMR0IP | — | RBIP | 1111 -1-1 | 1111 -1-1 |
| INTCON3 | INT2IP | INT1IP | — | INT2IE | INT1IE | — | INT2IF | INT1IF | 11-0 0-00 | 11-0 0-00 |

Legend: x = unknown, u = unchanged. Shaded cells are not used by PORTB.


© 2006 Microchip Technology Inc.

## 9.3 PORTC, TRISC and LATC Registers

PORTC is an 8-bit wide, bi-directional port. The corresponding Data Direction register is TRISC. Setting a TRISC bit (= 1) will make the corresponding PORTC pin an input (i.e., put the corresponding output driver in a Hi-Impedance mode). Clearing a TRISC bit (= 0) will make the corresponding PORTC pin an output (i.e., put the contents of the output latch on the selected pin).

The Data Latch register (LATC) is also memory mapped. Read-modify-write operations on the LATC register reads and writes the latched output value for PORTC.

PORTC is multiplexed with several peripheral functions (Table 9-5). PORTC pins have Schmitt Trigger input buffers.

When enabling peripheral functions, care should be taken in defining TRIS bits for each PORTC pin. Some peripherals override the TRIS bit to make a pin an output, while other peripherals override the TRIS bit to make a pin an input. The user should refer to the corresponding peripheral section for the correct TRIS bit settings.

| **Note:** | On a Power-on Reset, these pins are configured as digital inputs. |
|---|---|

The pin override value is not loaded into the TRIS register. This allows read-modify-write of the TRIS register, without concern due to peripheral overrides.

RC1 is normally configured by configuration bit, CCP2MX, as the default peripheral pin of the CCP2 module (default/erased state, CCP2MX = '1').

**EXAMPLE 9-3: INITIALIZING PORTC**

```
CLRF   PORTC    ; Initialize PORTC by
                ; clearing output
                ; data latches
CLRF   LATC     ; Alternate method
                ; to clear output
                ; data latches
MOVLW 0xCF      ; Value used to
                ; initialize data
                ; direction
MOVWF TRISC     ; Set RC<3:0> as inputs
                ; RC<5:4> as outputs
                ; RC<7:6> as inputs
```

**FIGURE 9-7: PORTC BLOCK DIAGRAM (PERIPHERAL OUTPUT OVERRIDE)**

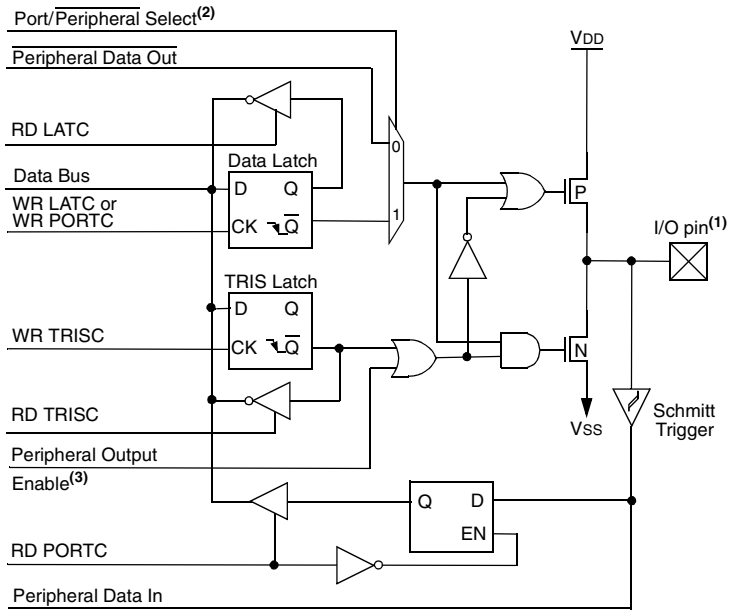


**Note 1:** I/O pins have diode protection to VDD and VSS.
**2:** Port/Peripheral Select signal selects between port data (input) and peripheral output.
**3:** Peripheral Output Enable is only active if peripheral select is active.

**TABLE 9-5: PORTC FUNCTIONS**

| Name | Bit# | Buffer Type | Function |
|---|---|---|---|
| RC0/T1OSO/T1CKI | bit0 | ST | Input/output port pin or Timer1 oscillator output/Timer1 clock input. |
| RC1/T1OSI/CCP2 | bit1 | ST | Input/output port pin, Timer1 oscillator input, or Capture2 input/ Compare2 output/PWM output when CCP2MX configuration bit is set. |
| RC2/CCP1 | bit2 | ST | Input/output port pin or Capture1 input/Compare1 output/PWM1 output. |
| RC3/SCK/SCL | bit3 | ST | RC3 can also be the synchronous serial clock for both SPI and $I^2C$ modes. |
| RC4/SDI/SDA | bit4 | ST | RC4 can also be the SPI Data In (SPI mode) or Data I/O ($I^2C$ mode). |
| RC5/SDO | bit5 | ST | Input/output port pin or Synchronous Serial Port data output. |
| RC6/TX/CK | bit6 | ST | Input/output port pin, Addressable USART Asynchronous Transmit, or Addressable USART Synchronous Clock. |
| RC7/RX/DT | bit7 | ST | Input/output port pin, Addressable USART Asynchronous Receive, or Addressable USART Synchronous Data. |

Legend: ST = Schmitt Trigger input

**TABLE 9-6: SUMMARY OF REGISTERS ASSOCIATED WITH PORTC**

| Name | Bit 7 | Bit 6 | Bit 5 | Bit 4 | Bit 3 | Bit 2 | Bit 1 | Bit 0 | Value on POR, BOR | Value on All Other RESETS |
|---|---|---|---|---|---|---|---|---|---|---|
| PORTC | RC7 | RC6 | RC5 | RC4 | RC3 | RC2 | RC1 | RC0 | xxxx xxxx | uuuu uuuu |
| LATC | LATC Data Output Register | | | | | | | | xxxx xxxx | uuuu uuuu |
| TRISC | PORTC Data Direction Register | | | | | | | | 1111 1111 | 1111 1111 |

Legend: x = unknown, u = unchanged


© 2006 Microchip Technology Inc.

## 9.4 PORTD, TRISD and LATD Registers

This section is applicable only to the PIC18F4X2 devices.

PORTD is an 8-bit wide, bi-directional port. The corresponding Data Direction register is TRISD. Setting a TRISD bit (= 1) will make the corresponding PORTD pin an input (i.e., put the corresponding output driver in a Hi-Impedance mode). Clearing a TRISD bit (= 0) will make the corresponding PORTD pin an output (i.e., put the contents of the output latch on the selected pin).

The Data Latch register (LATD) is also memory mapped. Read-modify-write operations on the LATD register reads and writes the latched output value for PORTD.

PORTD is an 8-bit port with Schmitt Trigger input buffers. Each pin is individually configurable as an input or output.

| **Note:** | On a Power-on Reset, these pins are configured as digital inputs. |
|---|---|

PORTD can be configured as an 8-bit wide microprocessor port (parallel slave port) by setting control bit PSPMODE (TRISE<4>). In this mode, the input buffers are TTL. See Section 9.6 for additional information on the Parallel Slave Port (PSP).

**EXAMPLE 9-4: INITIALIZING PORTD**

```
CLRF   PORTD  ; Initialize PORTD by
              ; clearing output
              ; data latches
CLRF   LATD   ; Alternate method
              ; to clear output
              ; data latches
MOVLW 0xCF    ; Value used to
              ; initialize data
              ; direction
MOVWF TRISD   ; Set RD<3:0> as inputs
              ; RD<5:4> as outputs
              ; RD<7:6> as inputs
```

**FIGURE 9-8: PORTD BLOCK DIAGRAM IN I/O PORT MODE**

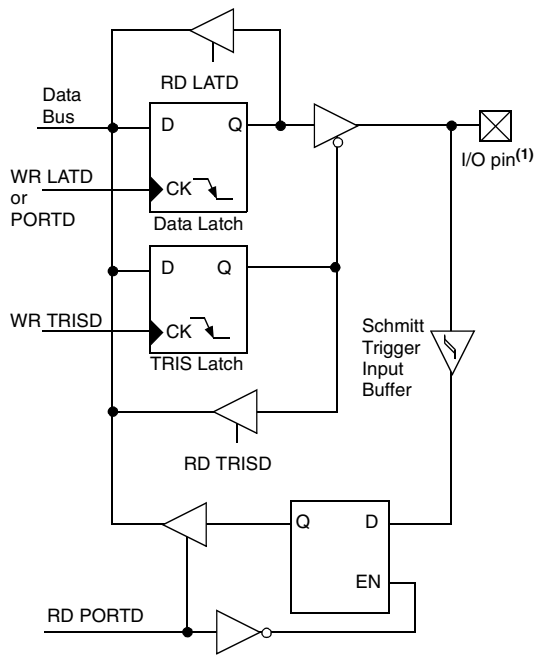


**Note 1:** I/O pins have diode protection to VDD and VSS.

**TABLE 9-7: PORTD FUNCTIONS**

| Name | Bit# | Buffer Type | Function |
|---|---|---|---|
| RD0/PSP0 | bit0 | ST/TTL(1) | Input/output port pin or parallel slave port bit0. |
| RD1/PSP1 | bit1 | ST/TTL(1) | Input/output port pin or parallel slave port bit1. |
| RD2/PSP2 | bit2 | ST/TTL(1) | Input/output port pin or parallel slave port bit2. |
| RD3/PSP3 | bit3 | ST/TTL(1) | Input/output port pin or parallel slave port bit3. |
| RD4/PSP4 | bit4 | ST/TTL(1) | Input/output port pin or parallel slave port bit4. |
| RD5/PSP5 | bit5 | ST/TTL(1) | Input/output port pin or parallel slave port bit5. |
| RD6/PSP6 | bit6 | ST/TTL(1) | Input/output port pin or parallel slave port bit6. |
| RD7/PSP7 | bit7 | ST/TTL(1) | Input/output port pin or parallel slave port bit7. |

Legend: ST = Schmitt Trigger input, TTL = TTL input

**Note 1:** Input buffers are Schmitt Triggers when in I/O mode and TTL buffer when in Parallel Slave Port mode.

**TABLE 9-8: SUMMARY OF REGISTERS ASSOCIATED WITH PORTD**

| Name | Bit 7 | Bit 6 | Bit 5 | Bit 4 | Bit 3 | Bit 2 | Bit 1 | Bit 0 | Value on POR, BOR | Value on All Other RESETS |
|---|---|---|---|---|---|---|---|---|---|---|
| PORTD | RD7 | RD6 | RD5 | RD4 | RD3 | RD2 | RD1 | RD0 | xxxx xxxx | uuuu uuuu |
| LATD | LATD Data Output Register | | | | | | | | xxxx xxxx | uuuu uuuu |
| TRISD | PORTD Data Direction Register | | | | | | | | 1111 1111 | 1111 1111 |
| TRISE | IBF | OBF | IBOV | PSPMODE | — | PORTE Data Direction bits | | | 0000 -111 | 0000 -111 |

Legend: x = unknown, u = unchanged, - = unimplemented, read as '0'. Shaded cells are not used by PORTD.


© 2006 Microchip Technology Inc.

## 9.5 PORTE, TRISE and LATE Registers

This section is only applicable to the PIC18F4X2 devices.

PORTE is a 3-bit wide, bi-directional port. The corresponding Data Direction register is TRISE. Setting a TRISE bit (= 1) will make the corresponding PORTE pin an input (i.e., put the corresponding output driver in a Hi-Impedance mode). Clearing a TRISE bit (= 0) will make the corresponding PORTE pin an output (i.e., put the contents of the output latch on the selected pin).

The Data Latch register (LATE) is also memory mapped. Read-modify-write operations on the LATE register reads and writes the latched output value for PORTE.

PORTE has three pins (RE0/$\overline{\text{RD}}$/AN5, RE1/$\overline{\text{WR}}$/AN6 and RE2/$\overline{\text{CS}}$/AN7) which are individually configurable as inputs or outputs. These pins have Schmitt Trigger input buffers.

Register 9-1 shows the TRISE register, which also controls the parallel slave port operation.

PORTE pins are multiplexed with analog inputs. When selected as an analog input, these pins will read as '0's.

TRISE controls the direction of the RE pins, even when they are being used as analog inputs. The user must make sure to keep the pins configured as inputs when using them as analog inputs.

| **Note:** | On a Power-on Reset, these pins are configured as analog inputs. |
|---|---|

**EXAMPLE 9-5: INITIALIZING PORTE**

```
CLRF   PORTE   ; Initialize PORTE by
               ; clearing output
               ; data latches
CLRF   LATE    ; Alternate method
               ; to clear output
               ; data latches
MOVLW  0x07    ; Configure A/D
MOVWF  ADCON1  ; for digital inputs
MOVLW  0x05    ; Value used to
               ; initialize data
               ; direction
MOVWF  TRISE   ; Set RE<0> as inputs
               ; RE<1> as outputs
               ; RE<2> as inputs
```

**FIGURE 9-9: PORTE BLOCK DIAGRAM IN I/O PORT MODE**

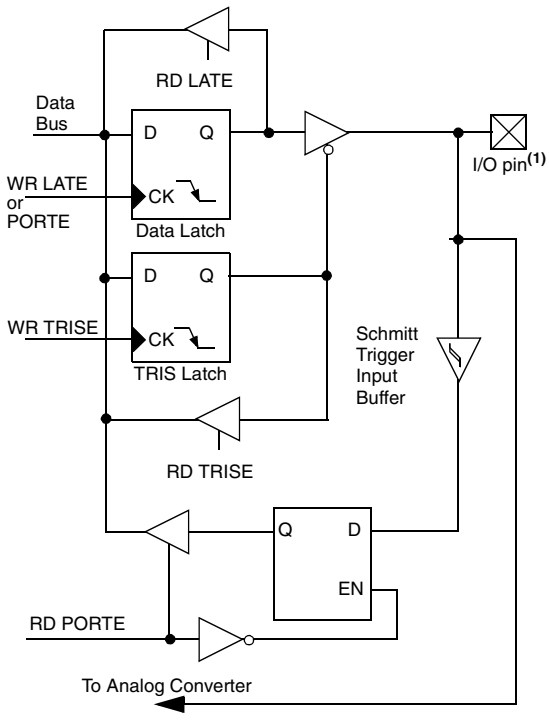


**Note 1:** I/O pins have diode protection to VDD and VSS.

**REGISTER 9-1: TRISE REGISTER**

| R-0 | R-0 | R/W-0 | R/W-0 | U-0 | R/W-1 | R/W-1 | R/W-1 |
|---|---|---|---|---|---|---|---|
| IBF | OBF | IBOV | PSPMODE | — | TRISE2 | TRISE1 | TRISE0 |
| bit 7 | | | | | | | bit 0 |

bit 7 **IBF:** Input Buffer Full Status bit
1 = A word has been received and waiting to be read by the CPU
0 = No word has been received

bit 6 **OBF**: Output Buffer Full Status bit
1 = The output buffer still holds a previously written word
0 = The output buffer has been read

bit 5 **IBOV**: Input Buffer Overflow Detect bit (in Microprocessor mode)
1 = A write occurred when a previously input word has not been read (must be cleared in software)
0 = No overflow occurred

bit 4 **PSPMODE**: Parallel Slave Port Mode Select bit
1 = Parallel Slave Port mode
0 = General purpose I/O mode

bit 3 **Unimplemented:** Read as '0'

bit 2 **TRISE2**: RE2 Direction Control bit
1 = Input
0 = Output

bit 1 **TRISE1**: RE1 Direction Control bit
1 = Input
0 = Output

bit 0 **TRISE0**: RE0 Direction Control bit
1 = Input
0 = Output

| Legend: | | | |
|---|---|---|---|
| R = Readable bit | W = Writable bit | U = Unimplemented bit, read as ‘0’ | |
| - n = Value at POR | ’1’ = Bit is set | ’0’ = Bit is cleared | x = Bit is unknown |


© 2006 Microchip Technology Inc.

**TABLE 9-9: PORTE FUNCTIONS**

| Name | Bit# | Buffer Type | Function |
|---|---|---|---|
| RE0/$\overline{\text{RD}}$/AN5 | bit0 | ST/TTL(1) | Input/output port pin or read control input in Parallel Slave Port mode or analog input:<br>$\overline{\text{RD}}$<br>1 = Not a read operation<br>0 = Read operation. Reads PORTD register (if chip selected). |
| RE1/$\overline{\text{WR}}$/AN6 | bit1 | ST/TTL(1) | Input/output port pin or write control input in Parallel Slave Port mode or analog input:<br>$\overline{\text{WR}}$<br>1 = Not a write operation<br>0 = Write operation. Writes PORTD register (if chip selected). |
| RE2/$\overline{\text{CS}}$/AN7 | bit2 | ST/TTL(1) | Input/output port pin or chip select control input in Parallel Slave Port mode or analog input:<br>$\overline{\text{CS}}$<br>1 = Device is not selected<br>0 = Device is selected |

Legend: ST = Schmitt Trigger input, TTL = TTL input

**Note 1:** Input buffers are Schmitt Triggers when in I/O mode and TTL buffers when in Parallel Slave Port mode.

**TABLE 9-10: SUMMARY OF REGISTERS ASSOCIATED WITH PORTE**

| Name | Bit 7 | Bit 6 | Bit 5 | Bit 4 | Bit 3 | Bit 2 | Bit 1 | Bit 0 | Value on POR, BOR | Value on All Other RESETS |
|---|---|---|---|---|---|---|---|---|---|---|
| PORTE | — | — | — | — | — | RE2 | RE1 | RE0 | ---- -000 | ---- -000 |
| LATE | — | — | — | — | — | LATE Data Output Register | | | ---- -xxx | ---- -uuu |
| TRISE | IBF | OBF | IBOV | PSPMODE | — | PORTE Data Direction bits | | | 0000 -111 | 0000 -111 |
| ADCON1 | ADFM | ADCS2 | — | — | PCFG3 | PCFG2 | PCFG1 | PCFG0 | 00-- 0000 | 00-- 0000 |

Legend: x = unknown, u = unchanged, - = unimplemented, read as '0'. Shaded cells are not used by PORTE.

## 9.6 Parallel Slave Port

The Parallel Slave Port is implemented on the 40-pin devices only (PIC18F4X2).

PORTD operates as an 8-bit wide Parallel Slave Port, or microprocessor port when control bit, PSPMODE (TRISE<4>) is set. It is asynchronously readable and writable by the external world through $\overline{RD}$ control input pin, RE0/$\overline{RD}$ and $\overline{WR}$ control input pin, RE1/$\overline{WR}$.

It can directly interface to an 8-bit microprocessor data bus. The external microprocessor can read or write the PORTD latch as an 8-bit latch. Setting bit PSPMODE enables port pin RE0/$\overline{RD}$ to be the $\overline{RD}$ input, RE1/$\overline{WR}$ to be the $\overline{WR}$ input and RE2/$\overline{CS}$ to be the $\overline{CS}$ (chip select) input. For this functionality, the corresponding data direction bits of the TRISE register (TRISE<2:0>) must be configured as inputs (set). The A/D port configuration bits PCFG2:PCFG0 (ADCON1<2:0>) must be set, which will configure pins RE2:RE0 as digital I/O.

A write to the PSP occurs when both the $\overline{CS}$ and $\overline{WR}$ lines are first detected low. A read from the PSP occurs when both the $\overline{CS}$ and $\overline{RD}$ lines are first detected low.

The PORTE I/O pins become control inputs for the microprocessor port when bit PSPMODE (TRISE<4>) is set. In this mode, the user must make sure that the TRISE<2:0> bits are set (pins are configured as digital inputs), and the ADCON1 is configured for digital I/O. In this mode, the input buffers are TTL.

**FIGURE 9-10: PORTD AND PORTE BLOCK DIAGRAM (PARALLEL SLAVE PORT)**

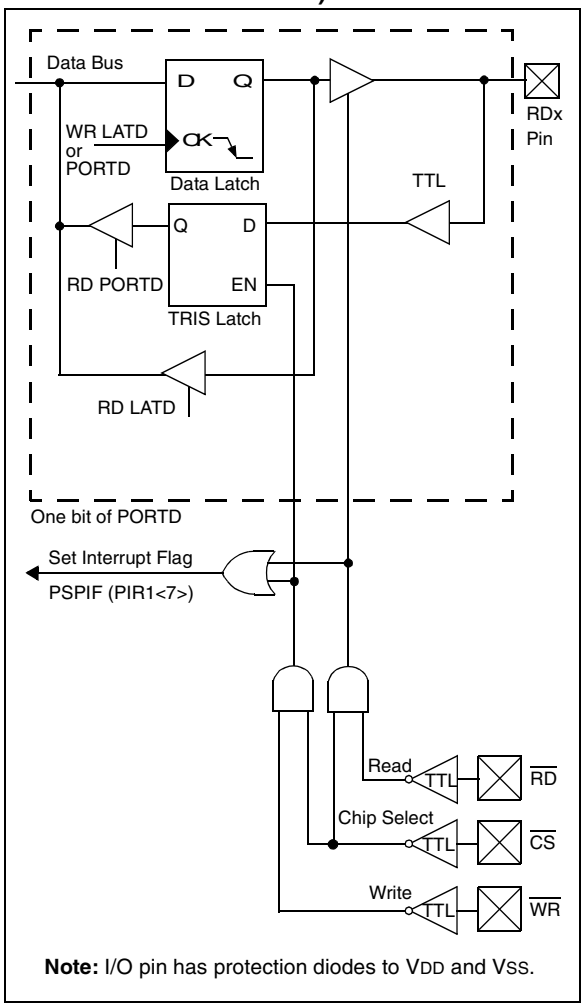


**Note:** I/O pin has protection diodes to VDD and VSS.

**FIGURE 9-11: PARALLEL SLAVE PORT WRITE WAVEFORMS**

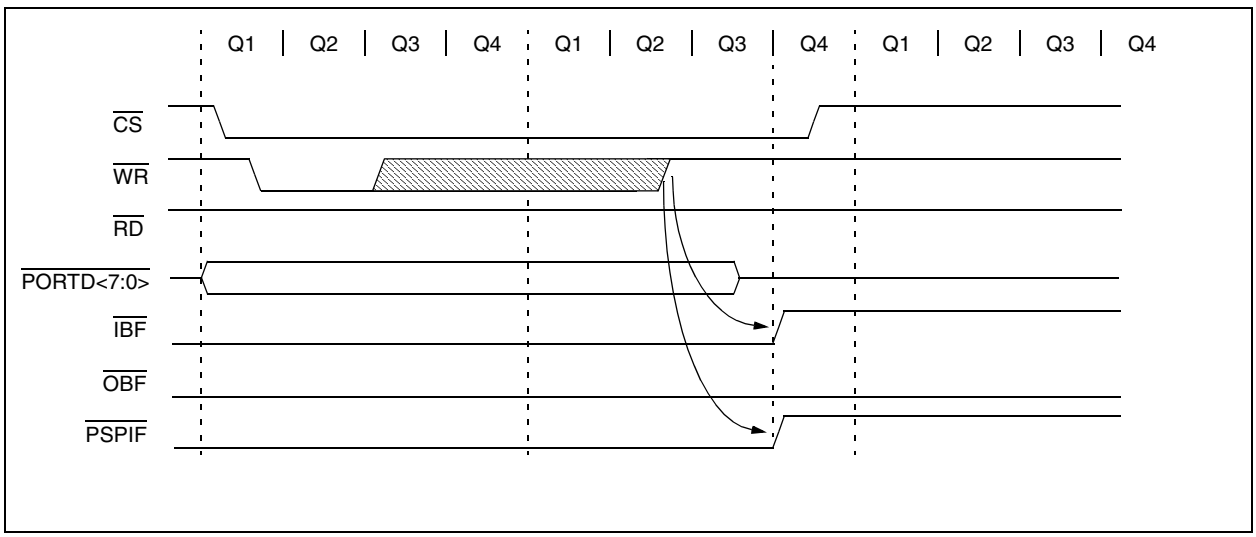



© 2006 Microchip Technology Inc.

**FIGURE 9-12: PARALLEL SLAVE PORT READ WAVEFORMS**

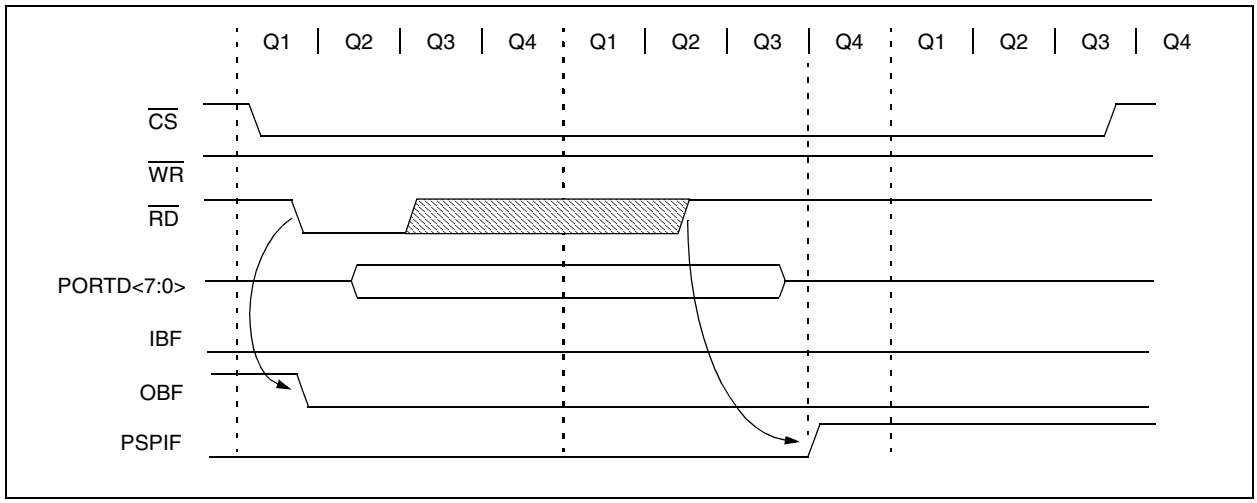


**TABLE 9-11: REGISTERS ASSOCIATED WITH PARALLEL SLAVE PORT**

| Name | Bit 7 | Bit 6 | Bit 5 | Bit 4 | Bit 3 | Bit 2 | Bit 1 | Bit 0 | Value on POR, BOR | Value on All Other RESETS |
|---|---|---|---|---|---|---|---|---|---|---|
| PORTD | Port Data Latch when written; Port pins when read | | | | | | | | xxxx xxxx | uuuu uuuu |
| LATD | LATD Data Output bits | | | | | | | | xxxx xxxx | uuuu uuuu |
| TRISD | PORTD Data Direction bits | | | | | | | | 1111 1111 | 1111 1111 |
| PORTE | — | — | — | — | — | RE2 | RE1 | RE0 | ---- -000 | ---- -000 |
| LATE | — | — | — | — | — | LATE Data Output bits | | | ---- -xxx | ---- -uuu |
| TRISE | IBF | OBF | IBOV | PSPMODE | — | PORTE Data Direction bits | | | 0000 -111 | 0000 -111 |
| INTCON | GIE/ GIEH | PEIE/ GIEL | TMR0IF | INT0IE | RBIE | TMR0IF | INT0IF | RBIF | 0000 000x | 0000 000u |
| PIR1 | PSPIF | ADIF | RCIF | TXIF | SSPIF | CCP1IF | TMR2IF | TMR1IF | 0000 0000 | 0000 0000 |
| PIE1 | PSPIE | ADIE | RCIE | TXIE | SSPIE | CCP1IE | TMR2IE | TMR1IE | 0000 0000 | 0000 0000 |
| IPR1 | PSPIP | ADIP | RCIP | TXIP | SSPIP | CCP1IP | TMR2IP | TMR1IP | 0000 0000 | 0000 0000 |
| ADCON1 | ADFM | ADCS2 | — | — | PCFG3 | PCFG2 | PCFG1 | PCFG0 | 00-- 0000 | 00-- 0000 |

Legend: x = unknown, u = unchanged, - = unimplemented, read as '0'. Shaded cells are not used by the Parallel Slave Port.

**NOTES:**


© 2006 Microchip Technology Inc.

## 10.0 TIMER0 MODULE

The Timer0 module has the following features:

- Software selectable as an 8-bit or 16-bit timer/counter
- Readable and writable
- Dedicated 8-bit software programmable prescaler
- Clock source selectable to be external or internal
- Interrupt-on-overflow from FFh to 00h in 8-bit mode and FFFFh to 0000h in 16-bit mode
- Edge select for external clock

Figure 10-1 shows a simplified block diagram of the Timer0 module in 8-bit mode and Figure 10-2 shows a simplified block diagram of the Timer0 module in 16-bit mode.

The T0CON register (Register 10-1) is a readable and writable register that controls all the aspects of Timer0, including the prescale selection.

**REGISTER 10-1: T0CON: TIMER0 CONTROL REGISTER**

| R/W-1 | R/W-1 | R/W-1 | R/W-1 | R/W-1 | R/W-1 | R/W-1 | R/W-1 |
|---|---|---|---|---|---|---|---|
| TMR0ON | T08BIT | T0CS | T0SE | PSA | T0PS2 | T0PS1 | T0PS0 |
| bit 7 | | | | | | | bit 0 |

bit 7 **TMR0ON:** Timer0 On/Off Control bit
`1` = Enables Timer0
`0` = Stops Timer0

bit 6 **T08BIT**: Timer0 8-bit/16-bit Control bit
`1` = Timer0 is configured as an 8-bit timer/counter
`0` = Timer0 is configured as a 16-bit timer/counter

bit 5 **T0CS**: Timer0 Clock Source Select bit
`1` = Transition on T0CKI pin
`0` = Internal instruction cycle clock (CLKO)

bit 4 **T0SE**: Timer0 Source Edge Select bit
`1` = Increment on high-to-low transition on T0CKI pin
`0` = Increment on low-to-high transition on T0CKI pin

bit 3 **PSA**: Timer0 Prescaler Assignment bit
`1` = TImer0 prescaler is NOT assigned. Timer0 clock input bypasses prescaler.
`0` = Timer0 prescaler is assigned. Timer0 clock input comes from prescaler output.

bit 2-0 **T0PS2:T0PS0**: Timer0 Prescaler Select bits
`111` = 1:256 prescale value
`110` = 1:128 prescale value
`101` = 1:64 prescale value
`100` = 1:32 prescale value
`011` = 1:16 prescale value
`010` = 1:8 prescale value
`001` = 1:4 prescale value
`000` = 1:2 prescale value

| Legend: | | | |
|---|---|---|---|
| R = Readable bit | W = Writable bit | U = Unimplemented bit, read as ‘0’ | |
| - n = Value at POR | ’1’ = Bit is set | ’0’ = Bit is cleared | x = Bit is unknown |

**FIGURE 10-1: TIMER0 BLOCK DIAGRAM IN 8-BIT MODE**

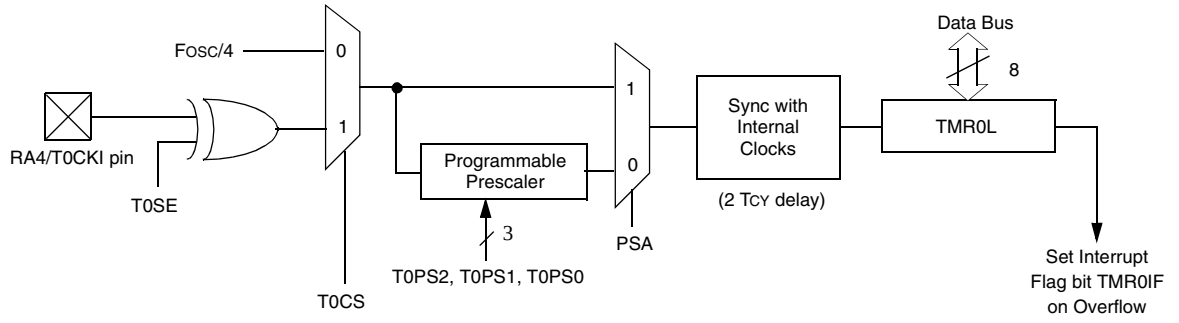


**Note:** Upon RESET, Timer0 is enabled in 8-bit mode with clock input from T0CKI max. prescale.

**FIGURE 10-2: TIMER0 BLOCK DIAGRAM IN 16-BIT MODE**

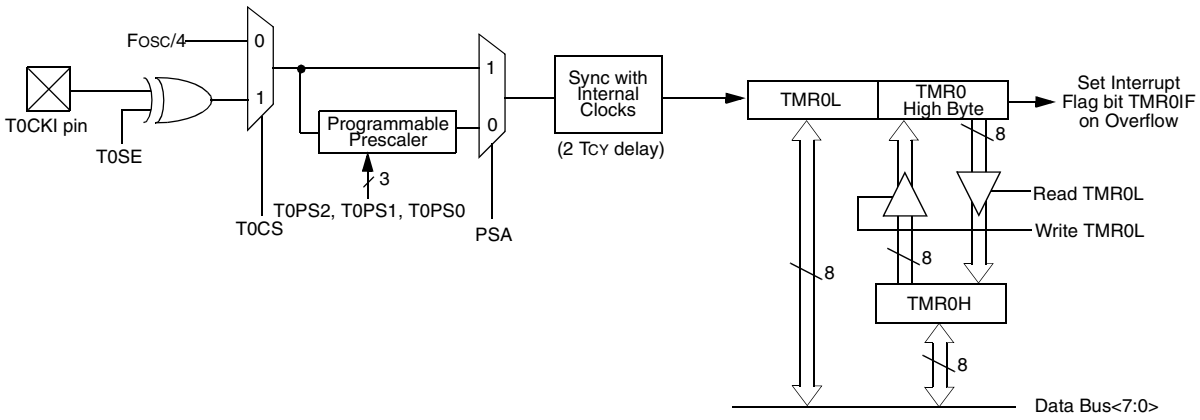


**Note:** Upon RESET, Timer0 is enabled in 8-bit mode with clock input from T0CKI max. prescale.


© 2006 Microchip Technology Inc.

## 10.1 Timer0 Operation

Timer0 can operate as a timer or as a counter.

Timer mode is selected by clearing the T0CS bit. In Timer mode, the Timer0 module will increment every instruction cycle (without prescaler). If the TMR0L register is written, the increment is inhibited for the following two instruction cycles. The user can work around this by writing an adjusted value to the TMR0L register.

Counter mode is selected by setting the T0CS bit. In Counter mode, Timer0 will increment, either on every rising or falling edge of pin RA4/T0CKI. The incrementing edge is determined by the Timer0 Source Edge Select bit (T0SE). Clearing the T0SE bit selects the rising edge. Restrictions on the external clock input are discussed below.

When an external clock input is used for Timer0, it must meet certain requirements. The requirements ensure the external clock can be synchronized with the internal phase clock (TOSC). Also, there is a delay in the actual incrementing of Timer0 after synchronization.

## 10.2 Prescaler

An 8-bit counter is available as a prescaler for the Timer0 module. The prescaler is not readable or writable.

The PSA and T0PS2:T0PS0 bits determine the prescaler assignment and prescale ratio.

Clearing bit PSA will assign the prescaler to the Timer0 module. When the prescaler is assigned to the Timer0 module, prescale values of 1:2, 1:4,..., 1:256 are selectable.

When assigned to the Timer0 module, all instructions writing to the TMR0L register (e.g., `CLRF TMR0`, `MOVWF TMR0`, `BSF TMR0, x`....etc.) will clear the prescaler count.

| **Note:** | Writing to TMR0L when the prescaler is assigned to Timer0 will clear the prescaler count, but will not change the prescaler assignment. |
|---|---|

### 10.2.1 SWITCHING PRESCALER ASSIGNMENT

The prescaler assignment is fully under software control, (i.e., it can be changed “on-the-fly” during program execution).

## 10.3 Timer0 Interrupt

The TMR0 interrupt is generated when the TMR0 register overflows from FFh to 00h in 8-bit mode, or FFFFh to 0000h in 16-bit mode. This overflow sets the TMR0IF bit. The interrupt can be masked by clearing the TMR0IE bit. The TMR0IE bit must be cleared in software by the Timer0 module Interrupt Service Routine before re-enabling this interrupt. The TMR0 interrupt cannot awaken the processor from SLEEP, since the timer is shut-off during SLEEP.

## 10.4 16-Bit Mode Timer Reads and Writes

TMR0H is not the high byte of the timer/counter in 16-bit mode, but is actually a buffered version of the high byte of Timer0 (refer to Figure 10-2). The high byte of the Timer0 counter/timer is not directly readable nor writable. TMR0H is updated with the contents of the high byte of Timer0 during a read of TMR0L. This provides the ability to read all 16-bits of Timer0 without having to verify that the read of the high and low byte were valid due to a rollover between successive reads of the high and low byte.

A write to the high byte of Timer0 must also take place through the TMR0H buffer register. Timer0 high byte is updated with the contents of TMR0H when a write occurs to TMR0L. This allows all 16-bits of Timer0 to be updated at once.

**TABLE 10-1: REGISTERS ASSOCIATED WITH TIMER0**

| Name | Bit 7 | Bit 6 | Bit 5 | Bit 4 | Bit 3 | Bit 2 | Bit 1 | Bit 0 | Value on POR, BOR | Value on All Other RESETS |
|---|---|---|---|---|---|---|---|---|---|---|
| TMR0L | Timer0 Module Low Byte Register | | | | | | | | xxxx xxxx | uuuu uuuu |
| TMR0H | Timer0 Module High Byte Register | | | | | | | | 0000 0000 | 0000 0000 |
| INTCON | GIE/GIEH | PEIE/GIEL | TMR0IE | INT0IE | RBIE | TMR0IF | INT0IF | RBIF | 0000 000x | 0000 000u |
| T0CON | TMR0ON | T08BIT | T0CS | T0SE | PSA | T0PS2 | T0PS1 | T0PS0 | 1111 1111 | 1111 1111 |
| TRISA | — | PORTA Data Direction Register | | | | | | | -111 1111 | -111 1111 |

Legend: x = unknown, u = unchanged, - = unimplemented locations read as '0'. Shaded cells are not used by Timer0.

**NOTES:**


© 2006 Microchip Technology Inc.

## 11.0 TIMER1 MODULE

The Timer1 module timer/counter has the following features:

- 16-bit timer/counter
  (two 8-bit registers; TMR1H and TMR1L)
- Readable and writable (both registers)
- Internal or external clock select
- Interrupt-on-overflow from FFFFh to 0000h
- RESET from CCP module special event trigger

Figure 11-1 is a simplified block diagram of the Timer1 module.

Register 11-1 details the Timer1 control register. This register controls the Operating mode of the Timer1 module, and contains the Timer1 oscillator enable bit (T1OSCEN). Timer1 can be enabled or disabled by setting or clearing control bit TMR1ON (T1CON<0>).

**REGISTER 11-1: T1CON: TIMER1 CONTROL REGISTER**

| R/W-0 | U-0 | R/W-0 | R/W-0 | R/W-0 | R/W-0 | R/W-0 | R/W-0 |
|---|---|---|---|---|---|---|---|
| RD16 | — | T1CKPS1 | T1CKPS0 | T1OSCEN | $\overline{\text{T1SYNC}}$ | TMR1CS | TMR1ON |
| bit 7 | | | | | | | bit 0 |

bit 7 **RD16:** 16-bit Read/Write Mode Enable bit
1 = Enables register Read/Write of Timer1 in one 16-bit operation
0 = Enables register Read/Write of Timer1 in two 8-bit operations

bit 6 **Unimplemented:** Read as '0'

bit 5-4 **T1CKPS1:T1CKPS0**: Timer1 Input Clock Prescale Select bits
11 = 1:8 Prescale value
10 = 1:4 Prescale value
01 = 1:2 Prescale value
00 = 1:1 Prescale value

bit 3 **T1OSCEN:** Timer1 Oscillator Enable bit
1 = Timer1 Oscillator is enabled
0 = Timer1 Oscillator is shut-off
The oscillator inverter and feedback resistor are turned off to eliminate power drain.

bit 2 **$\overline{\text{T1SYNC}}$:** Timer1 External Clock Input Synchronization Select bit
When TMR1CS = 1:
1 = Do not synchronize external clock input
0 = Synchronize external clock input
When TMR1CS = 0:
This bit is ignored. Timer1 uses the internal clock when TMR1CS = 0.

bit 1 **TMR1CS:** Timer1 Clock Source Select bit
1 = External clock from pin RC0/T1OSO/T13CKI (on the rising edge)
0 = Internal clock (FOSC/4)

bit 0 **TMR1ON:** Timer1 On bit
1 = Enables Timer1
0 = Stops Timer1

| Legend: | | | |
|---|---|---|---|
| R = Readable bit | W = Writable bit | U = Unimplemented bit, read as ‘0’ | |
| - n = Value at POR | ’1’ = Bit is set | ’0’ = Bit is cleared | x = Bit is unknown |

## 11.1 Timer1 Operation

Timer1 can operate in one of these modes:

- As a timer
- As a synchronous counter
- As an asynchronous counter

The Operating mode is determined by the clock select bit, TMR1CS (T1CON<1>).

When TMR1CS = 0, Timer1 increments every instruction cycle. When TMR1CS = 1, Timer1 increments on every rising edge of the external clock input or the Timer1 oscillator, if enabled.

When the Timer1 oscillator is enabled (T1OSCEN is set), the RC1/T1OSI and RC0/T1OSO/T1CKI pins become inputs. That is, the TRISC<1:0> value is ignored, and the pins are read as '0'.

Timer1 also has an internal "RESET input". This RESET can be generated by the CCP module (Section 14.0).

**FIGURE 11-1: TIMER1 BLOCK DIAGRAM**

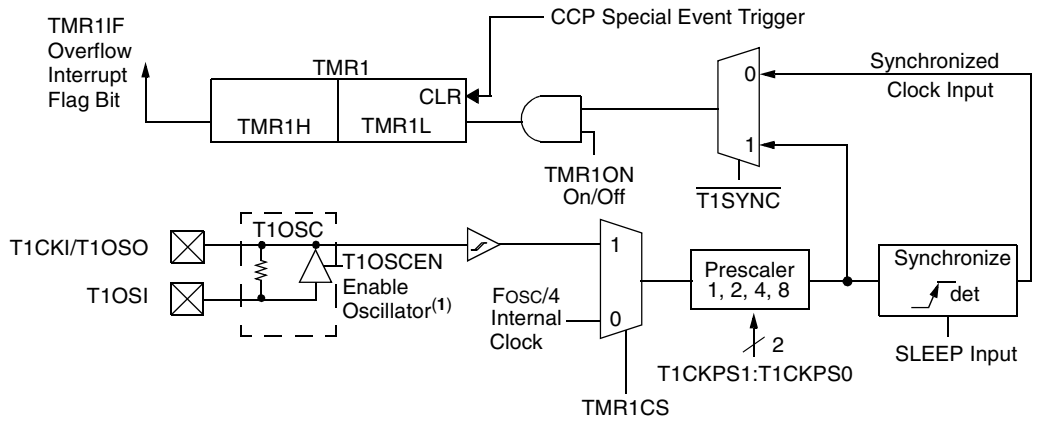


**Note 1:** When enable bit T1OSCEN is cleared, the inverter and feedback resistor are turned off. This eliminates power drain.

**FIGURE 11-2: TIMER1 BLOCK DIAGRAM: 16-BIT READ/WRITE MODE**

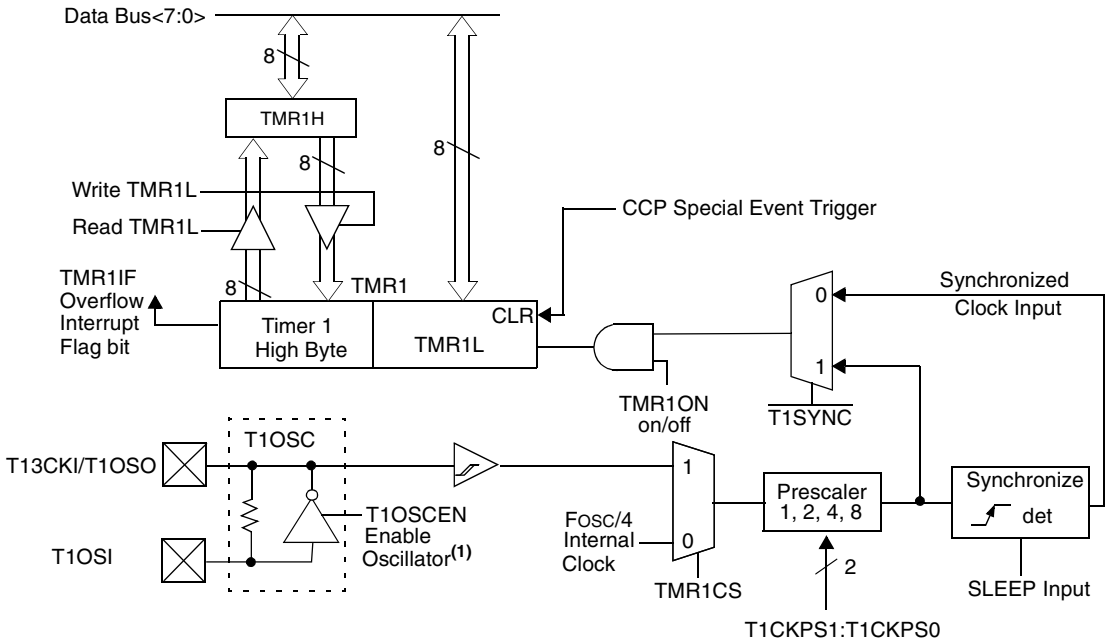


**Note 1:** When enable bit T1OSCEN is cleared, the inverter and feedback resistor are turned off. This eliminates power drain.


© 2006 Microchip Technology Inc.

## 11.2 Timer1 Oscillator

A crystal oscillator circuit is built-in between pins T1OSI (input) and T1OSO (amplifier output). It is enabled by setting control bit T1OSCEN (T1CON<3>). The oscillator is a low power oscillator rated up to 200 kHz. It will continue to run during SLEEP. It is primarily intended for a 32 kHz crystal. Table 11-1 shows the capacitor selection for the Timer1 oscillator.

The user must provide a software time delay to ensure proper start-up of the Timer1 oscillator.

**TABLE 11-1: CAPACITOR SELECTION FOR THE ALTERNATE OSCILLATOR**

| Osc Type | Freq | C1 | C2 |
|---|---|---|---|
| LP | 32 kHz | TBD(1) | TBD(1) |
| **Crystal to be Tested:** | | | |
| 32.768 kHz | Epson C-001R32.768K-A | ± 20 PPM | |

**Note 1:** Microchip suggests 33 pF as a starting point in validating the oscillator circuit.

**2:** Higher capacitance increases the stability of the oscillator, but also increases the start-up time.

**3:** Since each resonator/crystal has its own characteristics, the user should consult the resonator/crystal manufacturer for appropriate values of external components.

**4:** Capacitor values are for design guidance only.

## 11.3 Timer1 Interrupt

The TMR1 Register pair (TMR1H:TMR1L) increments from 0000h to FFFFh and rolls over to 0000h. The TMR1 Interrupt, if enabled, is generated on overflow, which is latched in interrupt flag bit TMR1IF (PIR1<0>). This interrupt can be enabled/disabled by setting/clearing TMR1 interrupt enable bit, TMR1IE (PIE1<0>).

## 11.4 Resetting Timer1 using a CCP Trigger Output

If the CCP module is configured in Compare mode to generate a “special event trigger” (CCP1M3:CCP1M0 = `1011`), this signal will reset Timer1 and start an A/D conversion (if the A/D module is enabled).

**Note:** The special event triggers from the CCP1 module will not set interrupt flag bit TMR1IF (PIR1<0>).

Timer1 must be configured for either Timer or Synchronized Counter mode to take advantage of this feature. If Timer1 is running in Asynchronous Counter mode, this RESET operation may not work.

In the event that a write to Timer1 coincides with a special event trigger from CCP1, the write will take precedence.

In this mode of operation, the CCPR1H:CCPR1L registers pair effectively becomes the period register for Timer1.

## 11.5 Timer1 16-Bit Read/Write Mode

Timer1 can be configured for 16-bit reads and writes (see Figure 11-2). When the RD16 control bit (T1CON<7>) is set, the address for TMR1H is mapped to a buffer register for the high byte of Timer1. A read from TMR1L will load the contents of the high byte of Timer1 into the Timer1 high byte buffer. This provides the user with the ability to accurately read all 16-bits of Timer1 without having to determine whether a read of the high byte followed by a read of the low byte is valid, due to a rollover between reads.

A write to the high byte of Timer1 must also take place through the TMR1H buffer register. Timer1 high byte is updated with the contents of TMR1H when a write occurs to TMR1L. This allows a user to write all 16 bits to both the high and low bytes of Timer1 at once.

The high byte of Timer1 is not directly readable or writable in this mode. All reads and writes must take place through the Timer1 high byte buffer register. Writes to TMR1H do not clear the Timer1 prescaler. The prescaler is only cleared on writes to TMR1L.

© 2006 Microchip Technology Inc.

**TABLE 11-2: REGISTERS ASSOCIATED WITH TIMER1 AS A TIMER/COUNTER**

| Name | Bit 7 | Bit 6 | Bit 5 | Bit 4 | Bit 3 | Bit 2 | Bit 1 | Bit 0 | Value on POR, BOR | Value on All Other RESETS |
|---|---|---|---|---|---|---|---|---|---|---|
| INTCON | GIE/GIEH | PEIE/GIEL | TMR0IE | INT0IE | RBIE | TMR0IF | INT0IF | RBIF | 0000 000x | 0000 000u |
| PIR1 | PSPIF(1) | ADIF | RCIF | TXIF | SSPIF | CCP1IF | TMR2IF | TMR1IF | 0000 0000 | 0000 0000 |
| PIE1 | PSPIE(1) | ADIE | RCIE | TXIE | SSPIE | CCP1IE | TMR2IE | TMR1IE | 0000 0000 | 0000 0000 |
| IPR1 | PSPIP(1) | ADIP | RCIP | TXIP | SSPIP | CCP1IP | TMR2IP | TMR1IP | 0000 0000 | 0000 0000 |
| TMR1L | Holding Register for the Least Significant Byte of the 16-bit TMR1 Register | | | | | | | | xxxx xxxx | uuuu uuuu |
| TMR1H | Holding Register for the Most Significant Byte of the 16-bit TMR1 Register | | | | | | | | xxxx xxxx | uuuu uuuu |
| T1CON | RD16 | — | T1CKPS1 | T1CKPS0 | T1OSCEN | T1SYNC | TMR1CS | TMR1ON | 0-00 0000 | u-uu uuuu |

Legend: x = unknown, u = unchanged, - = unimplemented, read as '0'. Shaded cells are not used by the Timer1 module.

**Note 1:** The PSPIF, PSPIE and PSPIP bits are reserved on the PIC18F2X2 devices; always maintain these bits clear.


© 2006 Microchip Technology Inc.

## 12.0 TIMER2 MODULE

The Timer2 module timer has the following features:

- 8-bit timer (TMR2 register)
- 8-bit period register (PR2)
- Readable and writable (both registers)
- Software programmable prescaler (1:1, 1:4, 1:16)
- Software programmable postscaler (1:1 to 1:16)
- Interrupt on TMR2 match of PR2
- SSP module optional use of TMR2 output to generate clock shift

Timer2 has a control register shown in Register 12-1. Timer2 can be shut-off by clearing control bit TMR2ON (T2CON<2>) to minimize power consumption. Figure 12-1 is a simplified block diagram of the Timer2 module. Register 12-1 shows the Timer2 control register. The prescaler and postscaler selection of Timer2 are controlled by this register.

### 12.1 Timer2 Operation

Timer2 can be used as the PWM time-base for the PWM mode of the CCP module. The TMR2 register is readable and writable, and is cleared on any device RESET. The input clock (Fosc/4) has a prescale option of 1:1, 1:4 or 1:16, selected by control bits T2CKPS1:T2CKPS0 (T2CON<1:0>). The match output of TMR2 goes through a 4-bit postscaler (which gives a 1:1 to 1:16 scaling inclusive) to generate a TMR2 interrupt (latched in flag bit TMR2IF, (PIR1<1>)).

The prescaler and postscaler counters are cleared when any of the following occurs:

- a write to the TMR2 register
- a write to the T2CON register
- any device RESET (Power-on Reset, $\overline{\text{MCLR}}$ Reset, Watchdog Timer Reset, or Brown-out Reset)

TMR2 is not cleared when T2CON is written.

**REGISTER 12-1: T2CON: TIMER2 CONTROL REGISTER**

| U-0 | R/W-0 | R/W-0 | R/W-0 | R/W-0 | R/W-0 | R/W-0 | R/W-0 |
|---|---|---|---|---|---|---|---|
| — | TOUTPS3 | TOUTPS2 | TOUTPS1 | TOUTPS0 | TMR2ON | T2CKPS1 | T2CKPS0 |
| bit 7 | | | | | | | bit 0 |

bit 7 **Unimplemented:** Read as '0'

bit 6-3 **TOUTPS3:TOUTPS0**: Timer2 Output Postscale Select bits
`0000` = 1:1 Postscale
`0001` = 1:2 Postscale
•
•
•
`1111` = 1:16 Postscale

bit 2 **TMR2ON**: Timer2 On bit
`1` = Timer2 is on
`0` = Timer2 is off

bit 1-0 **T2CKPS1:T2CKPS0**: Timer2 Clock Prescale Select bits
`00` = Prescaler is 1
`01` = Prescaler is 4
`1x` = Prescaler is 16

| Legend: | | | |
|---|---|---|---|
| R = Readable bit | W = Writable bit | U = Unimplemented bit, read as ‘0’ | |
| - n = Value at POR | ’1’ = Bit is set | ’0’ = Bit is cleared | x = Bit is unknown |

## 12.2 Timer2 Interrupt

The Timer2 module has an 8-bit period register, PR2. Timer2 increments from 00h until it matches PR2 and then resets to 00h on the next increment cycle. PR2 is a readable and writable register. The PR2 register is initialized to FFh upon RESET.

## 12.3 Output of TMR2

The output of TMR2 (before the postscaler) is fed to the Synchronous Serial Port module, which optionally uses it to generate the shift clock.

**FIGURE 12-1: TIMER2 BLOCK DIAGRAM**

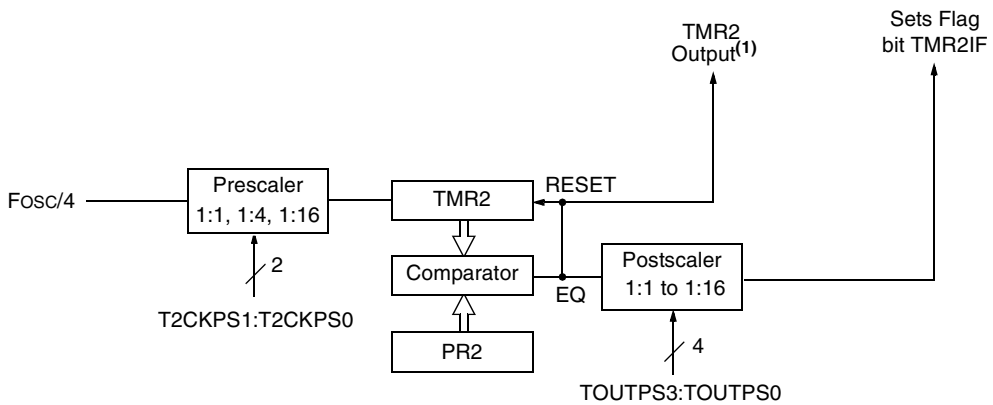


**Note 1:** TMR2 register output can be software selected by the SSP Module as a baud clock.

**TABLE 12-1: REGISTERS ASSOCIATED WITH TIMER2 AS A TIMER/COUNTER**

| Name | Bit 7 | Bit 6 | Bit 5 | Bit 4 | Bit 3 | Bit 2 | Bit 1 | Bit 0 | Value on POR, BOR | Value on All Other RESETS |
|---|---|---|---|---|---|---|---|---|---|---|
| INTCON | GIE/GIEH | PEIE/GIEL | TMR0IE | INT0IE | RBIE | TMR0IF | INT0IF | RBIF | 0000 000x | 0000 000u |
| PIR1 | PSPIF(1) | ADIF | RCIF | TXIF | SSPIF | CCP1IF | TMR2IF | TMR1IF | 0000 0000 | 0000 0000 |
| PIE1 | PSPIE(1) | ADIE | RCIE | TXIE | SSPIE | CCP1IE | TMR2IE | TMR1IE | 0000 0000 | 0000 0000 |
| IPR1 | PSPIP(1) | ADIP | RCIP | TXIP | SSPIP | CCP1IP | TMR2IP | TMR1IP | 0000 0000 | 0000 0000 |
| TMR2 | Timer2 Module Register | | | | | | | | 0000 0000 | 0000 0000 |
| T2CON | — | TOUTPS3 | TOUTPS2 | TOUTPS1 | TOUTPS0 | TMR2ON | T2CKPS1 | T2CKPS0 | -000 0000 | -000 0000 |
| PR2 | Timer2 Period Register | | | | | | | | 1111 1111 | 1111 1111 |

Legend: x = unknown, u = unchanged, - = unimplemented read as '0'. Shaded cells are not used by the Timer2 module.

**Note 1:** The PSPIF, PSPIE and PSPIP bits are reserved on the PIC18F2X2 devices; always maintain these bits clear.


© 2006 Microchip Technology Inc.

## 13.0 TIMER3 MODULE

The Timer3 module timer/counter has the following features:

- 16-bit timer/counter
  (two 8-bit registers; TMR3H and TMR3L)
- Readable and writable (both registers)
- Internal or external clock select
- Interrupt-on-overflow from FFFFh to 0000h
- RESET from CCP module trigger

Figure 13-1 is a simplified block diagram of the Timer3 module.

Register 13-1 shows the Timer3 control register. This register controls the Operating mode of the Timer3 module and sets the CCP clock source.

Register 11-1 shows the Timer1 control register. This register controls the Operating mode of the Timer1 module, as well as contains the Timer1 oscillator enable bit (T1OSCEN), which can be a clock source for Timer3.

**REGISTER 13-1: T3CON: TIMER3 CONTROL REGISTER**

| R/W-0 | R/W-0 | R/W-0 | R/W-0 | R/W-0 | R/W-0 | R/W-0 | R/W-0 |
|---|---|---|---|---|---|---|---|
| RD16 | T3CCP2 | T3CKPS1 | T3CKPS0 | T3CCP1 | $\overline{\text{T3SYNC}}$ | TMR3CS | TMR3ON |
| bit 7 | | | | | | | bit 0 |

bit 7 **RD16:** 16-bit Read/Write Mode Enable bit
1 = Enables register Read/Write of Timer3 in one 16-bit operation
0 = Enables register Read/Write of Timer3 in two 8-bit operations

bit 6-3 **T3CCP2:T3CCP1:** Timer3 and Timer1 to CCPx Enable bits
1x = Timer3 is the clock source for compare/capture CCP modules
01 = Timer3 is the clock source for compare/capture of CCP2,
Timer1 is the clock source for compare/capture of CCP1
00 = Timer1 is the clock source for compare/capture CCP modules

bit 5-4 **T3CKPS1:T3CKPS0**: Timer3 Input Clock Prescale Select bits
11 = 1:8 Prescale value
10 = 1:4 Prescale value
01 = 1:2 Prescale value
00 = 1:1 Prescale value

bit 2 **$\overline{\text{T3SYNC}}$:** Timer3 External Clock Input Synchronization Control bit
(Not usable if the system clock comes from Timer1/Timer3)
When TMR3CS = 1:
1 = Do not synchronize external clock input
0 = Synchronize external clock input
When TMR3CS = 0:
This bit is ignored. Timer3 uses the internal clock when TMR3CS = 0.

bit 1 **TMR3CS:** Timer3 Clock Source Select bit
1 = External clock input from Timer1 oscillator or T1CKI
(on the rising edge after the first falling edge)
0 = Internal clock (FOSC/4)

bit 0 **TMR3ON:** Timer3 On bit
1 = Enables Timer3
0 = Stops Timer3

| Legend: | | | |
|---|---|---|---|
| R = Readable bit | W = Writable bit | U = Unimplemented bit, read as ‘0’ | |
| - n = Value at POR | ’1’ = Bit is set | ’0’ = Bit is cleared | x = Bit is unknown |

## 13.1 Timer3 Operation

Timer3 can operate in one of these modes:

- As a timer
- As a synchronous counter
- As an asynchronous counter

The Operating mode is determined by the clock select bit, TMR3CS (T3CON<1>).

When TMR3CS = 0, Timer3 increments every instruction cycle. When TMR3CS = 1, Timer3 increments on every rising edge of the Timer1 external clock input or the Timer1 oscillator, if enabled.

When the Timer1 oscillator is enabled (T1OSCEN is set), the RC1/T1OSI and RC0/T1OSO/T1CKI pins become inputs. That is, the TRISC<1:0> value is ignored, and the pins are read as '0'.

Timer3 also has an internal "RESET input". This RESET can be generated by the CCP module (Section 14.0).

**FIGURE 13-1: TIMER3 BLOCK DIAGRAM**

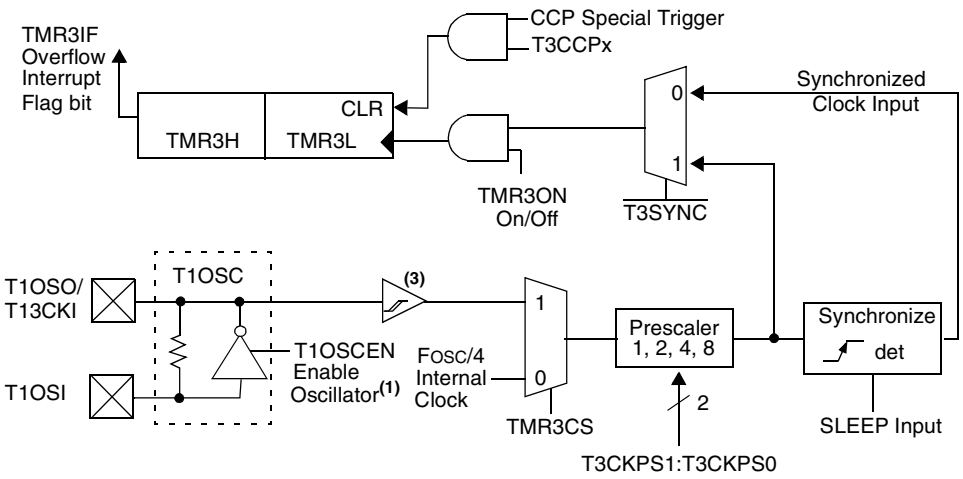


**Note 1:** When enable bit T1OSCEN is cleared, the inverter and feedback resistor are turned off. This eliminates power drain.

**FIGURE 13-2: TIMER3 BLOCK DIAGRAM CONFIGURED IN 16-BIT READ/WRITE MODE**

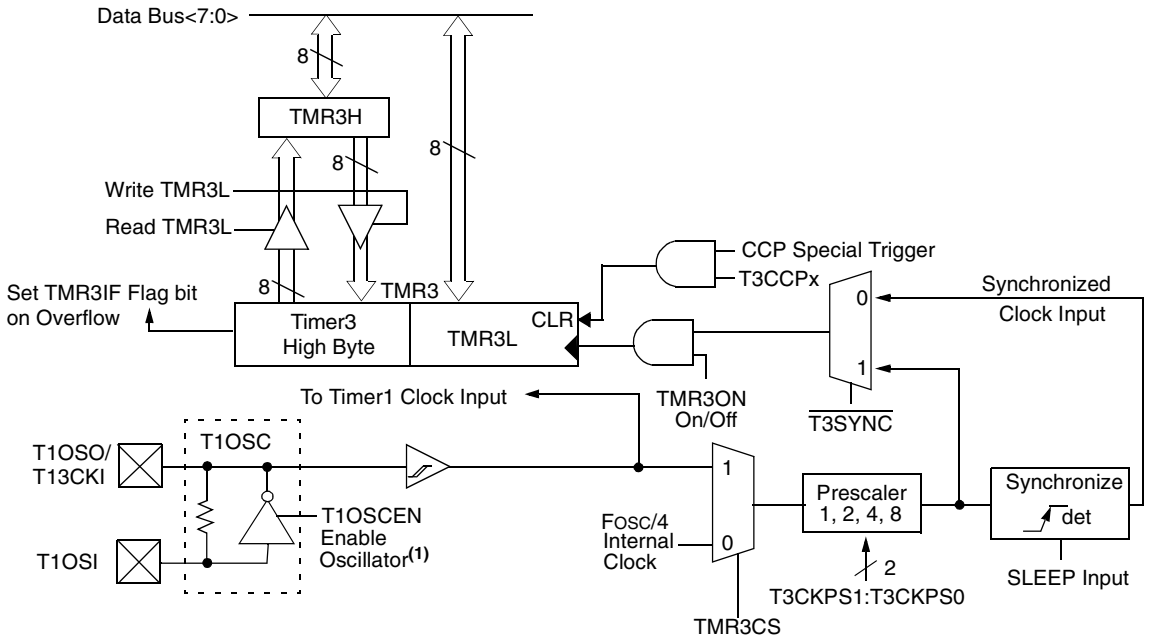


**Note 1:** When the T1OSCEN bit is cleared, the inverter and feedback resistor are turned off. This eliminates power drain.


© 2006 Microchip Technology Inc.

## 13.2 Timer1 Oscillator

The Timer1 oscillator may be used as the clock source for Timer3. The Timer1 oscillator is enabled by setting the T1OSCEN (T1CON<3>) bit. The oscillator is a low power oscillator rated up to 200 KHz. See Section 11.0 for further details.

## 13.3 Timer3 Interrupt

The TMR3 Register pair (TMR3H:TMR3L) increments from 0000h to FFFFh and rolls over to 0000h. The TMR3 Interrupt, if enabled, is generated on overflow, which is latched in interrupt flag bit, TMR3IF (PIR2<1>). This interrupt can be enabled/disabled by setting/clearing TMR3 interrupt enable bit, TMR3IE (PIE2<1>).

## 13.4 Resetting Timer3 Using a CCP Trigger Output

If the CCP module is configured in Compare mode to generate a “special event trigger” (CCP1M3:CCP1M0 = `1011`), this signal will reset Timer3.

| | |
|---|---|
| **Note:** | The special event triggers from the CCP module will not set interrupt flag bit, TMR3IF (PIR1<0>). |

Timer3 must be configured for either Timer or Synchronized Counter mode to take advantage of this feature. If Timer3 is running in Asynchronous Counter mode, this RESET operation may not work. In the event that a write to Timer3 coincides with a special event trigger from CCP1, the write will take precedence. In this mode of operation, the CCPR1H:CCPR1L registers pair effectively becomes the period register for Timer3.

**TABLE 13-1: REGISTERS ASSOCIATED WITH TIMER3 AS A TIMER/COUNTER**

| Name | Bit 7 | Bit 6 | Bit 5 | Bit 4 | Bit 3 | Bit 2 | Bit 1 | Bit 0 | Value on POR, BOR | Value on All Other RESETS |
|---|---|---|---|---|---|---|---|---|---|---|
| INTCON | GIE/ GIEH | PEIE/ GIEL | TMR0IE | INT0IE | RBIE | TMR0IF | INT0IF | RBIF | `0000 000x` | `0000 000u` |
| PIR2 | — | — | — | EEIF | BCLIF | LVDIF | TMR3IF | CCP2IF | `---0 0000` | `---0 0000` |
| PIE2 | — | — | — | EEIE | BCLIE | LVDIE | TMR3IE | CCP2IE | `---0 0000` | `---0 0000` |
| IPR2 | — | — | — | EEIP | BCLIP | LVDIP | TMR3IP | CCP2IP | `---1 1111` | `---1 1111` |
| TMR3L | Holding Register for the Least Significant Byte of the 16-bit TMR3 Register | | | | | | | | `xxxx xxxx` | `uuuu uuuu` |
| TMR3H | Holding Register for the Most Significant Byte of the 16-bit TMR3 Register | | | | | | | | `xxxx xxxx` | `uuuu uuuu` |
| T1CON | RD16 | — | T1CKPS1 | T1CKPS0 | T1OSCEN | $\overline{\text{T1SYNC}}$ | TMR1CS | TMR1ON | `0-00 0000` | `u-uu uuuu` |
| T3CON | RD16 | T3CCP2 | T3CKPS1 | T3CKPS0 | T3CCP1 | $\overline{\text{T3SYNC}}$ | TMR3CS | TMR3ON | `0000 0000` | `uuuu uuuu` |

Legend: `x` = unknown, `u` = unchanged, - = unimplemented, read as '0'. Shaded cells are not used by the Timer1 module.

**NOTES:**


© 2006 Microchip Technology Inc.

## 14.0 CAPTURE/COMPARE/PWM (CCP) MODULES

Each CCP (Capture/Compare/PWM) module contains a 16-bit register which can operate as a 16-bit Capture register, as a 16-bit Compare register or as a PWM Master/Slave Duty Cycle register. Table 14-1 shows the timer resources of the CCP Module modes.

The operation of CCP1 is identical to that of CCP2, with the exception of the special event trigger. Therefore, operation of a CCP module in the following sections is described with respect to CCP1.

Table 14-2 shows the interaction of the CCP modules.

**REGISTER 14-1: CCP1CON REGISTER/CCP2CON REGISTER**

| U-0 | U-0 | R/W-0 | R/W-0 | R/W-0 | R/W-0 | R/W-0 | R/W-0 |
|---|---|---|---|---|---|---|---|
| — | — | DCxB1 | DCxB0 | CCPxM3 | CCPxM2 | CCPxM1 | CCPxM0 |
| bit 7 | | | | | | | bit 0 |

bit 7-6 **Unimplemented:** Read as '0'

bit 5-4 **DCxB1:DCxB0**: PWM Duty Cycle bit1 and bit0

Capture mode:
Unused

Compare mode:
Unused

PWM mode:
These bits are the two LSbs (bit1 and bit0) of the 10-bit PWM duty cycle. The upper eight bits (DCx9:DCx2) of the duty cycle are found in CCPRxL.

bit 3-0 **CCPxM3:CCPxM0**: CCPx Mode Select bits

`0000` = Capture/Compare/PWM disabled (resets CCPx module)
`0001` = Reserved
`0010` = Compare mode, toggle output on match (CCPxIF bit is set)
`0011` = Reserved
`0100` = Capture mode, every falling edge
`0101` = Capture mode, every rising edge
`0110` = Capture mode, every 4th rising edge
`0111` = Capture mode, every 16th rising edge
`1000` = Compare mode,
Initialize CCP pin Low, on compare match force CCP pin High (CCPIF bit is set)
`1001` = Compare mode,
Initialize CCP pin High, on compare match force CCP pin Low (CCPIF bit is set)
`1010` = Compare mode,
Generate software interrupt on compare match (CCPIF bit is set, CCP pin is unaffected)
`1011` = Compare mode,
Trigger special event (CCPIF bit is set)
`11xx` = PWM mode

| Legend: | | | |
|---|---|---|---|
| R = Readable bit | W = Writable bit | U = Unimplemented bit, read as ‘0’ | |
| - n = Value at POR | ’1’ = Bit is set | ’0’ = Bit is cleared | x = Bit is unknown |

## 14.1 CCP1 Module

Capture/Compare/PWM Register 1 (CCPR1) is comprised of two 8-bit registers: CCPR1L (low byte) and CCPR1H (high byte). The CCP1CON register controls the operation of CCP1. All are readable and writable.

**TABLE 14-1: CCP MODE - TIMER RESOURCE**

| CCP Mode | Timer Resource |
|---|---|
| Capture | Timer1 or Timer3 |
| Compare | Timer1 or Timer3 |
| PWM | Timer2 |

## 14.2 CCP2 Module

Capture/Compare/PWM Register2 (CCPR2) is comprised of two 8-bit registers: CCPR2L (low byte) and CCPR2H (high byte). The CCP2CON register controls the operation of CCP2. All are readable and writable.

**TABLE 14-2: INTERACTION OF TWO CCP MODULES**

| CCPx Mode | CCPy Mode | Interaction |
|---|---|---|
| Capture | Capture | TMR1 or TMR3 time-base. Time-base can be different for each CCP. |
| Capture | Compare | The compare could be configured for the special event trigger, which clears either TMR1 or TMR3 depending upon which time-base is used. |
| Compare | Compare | The compare(s) could be configured for the special event trigger, which clears TMR1 or TMR3 depending upon which time-base is used. |
| PWM | PWM | The PWMs will have the same frequency and update rate (TMR2 interrupt). |
| PWM | Capture | None |
| PWM | Compare | None |


© 2006 Microchip Technology Inc.

## 14.3 Capture Mode

In Capture mode, CCPR1H:CCPR1L captures the 16-bit value of the TMR1 or TMR3 registers when an event occurs on pin RC2/CCP1. An event is defined as one of the following:

- every falling edge
- every rising edge
- every 4th rising edge
- every 16th rising edge

The event is selected by control bits CCP1M3:CCP1M0 (CCP1CON<3:0>). When a capture is made, the interrupt request flag bit CCP1IF (PIR1<2>) is set; it must be cleared in software. If another capture occurs before the value in register CCPR1 is read, the old captured value is overwritten by the new captured value.

### 14.3.1 CCP PIN CONFIGURATION

In Capture mode, the RC2/CCP1 pin should be configured as an input by setting the TRISC<2> bit.

| **Note:** | If the RC2/CCP1 is configured as an output, a write to the port can cause a capture condition. |
|---|---|

### 14.3.2 TIMER1/TIMER3 MODE SELECTION

The timers that are to be used with the capture feature (either Timer1 and/or Timer3) must be running in Timer mode or Synchronized Counter mode. In Asynchronous Counter mode, the capture operation may not work. The timer to be used with each CCP module is selected in the T3CON register.

### 14.3.3 SOFTWARE INTERRUPT

When the Capture mode is changed, a false capture interrupt may be generated. The user should keep bit CCP1IE (PIE1<2>) clear to avoid false interrupts and should clear the flag bit, CCP1IF, following any such change in Operating mode.

### 14.3.4 CCP PRESCALER

There are four prescaler settings, specified by bits CCP1M3:CCP1M0. Whenever the CCP module is turned off or the CCP module is not in Capture mode, the prescaler counter is cleared. This means that any RESET will clear the prescaler counter.

Switching from one capture prescaler to another may generate an interrupt. Also, the prescaler counter will not be cleared, therefore, the first capture may be from a non-zero prescaler. Example 14-1 shows the recommended method for switching between capture prescalers. This example also clears the prescaler counter and will not generate the “false” interrupt.

**EXAMPLE 14-1: CHANGING BETWEEN CAPTURE PRESCALERS**

```
CLRF    CCP1CON, F  ; Turn CCP module off
MOVLW   NEW_CAPT_PS ; Load WREG with the
                    ; new prescaler mode
                    ; value and CCP ON
MOVWF   CCP1CON     ; Load CCP1CON with
                    ; this value
```

**FIGURE 14-1: CAPTURE MODE OPERATION BLOCK DIAGRAM**

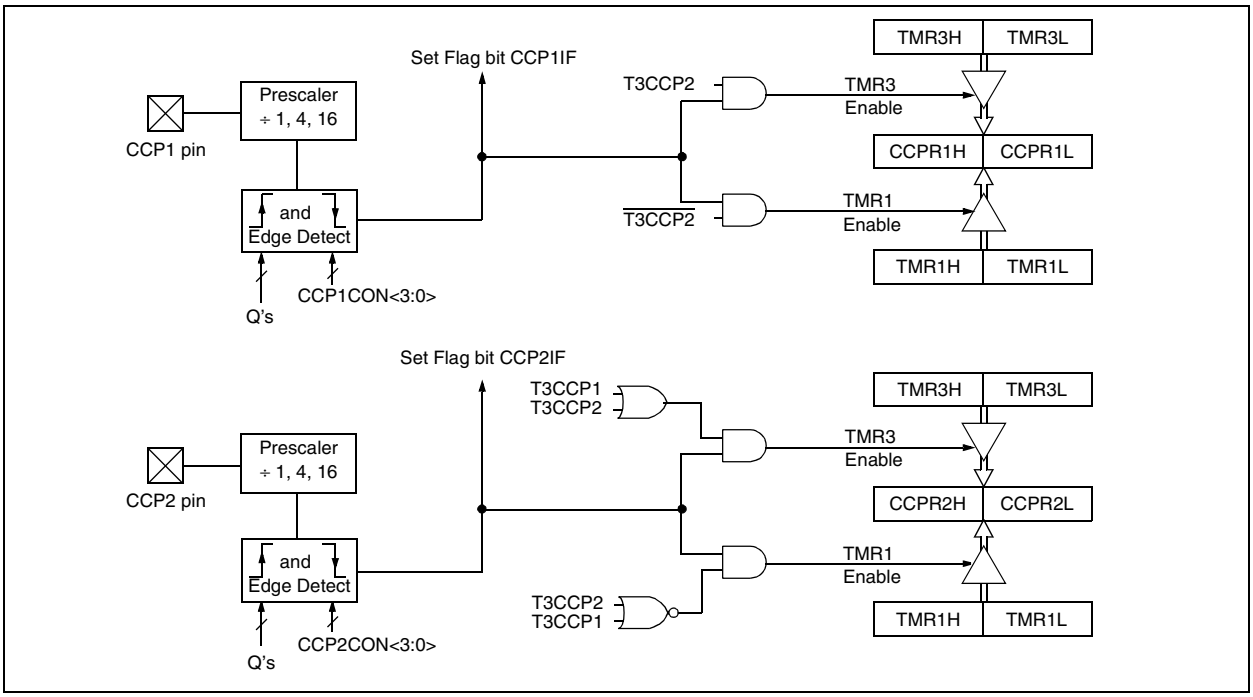

## 14.4 Compare Mode

In Compare mode, the 16-bit CCPR1 (CCPR2) register value is constantly compared against either the TMR1 register pair value, or the TMR3 register pair value. When a match occurs, the RC2/CCP1 (RC1/CCP2) pin is:

- driven High
- driven Low
- toggle output (High to Low or Low to High)
- remains unchanged

The action on the pin is based on the value of control bits CCP1M3:CCP1M0 (CCP2M3:CCP2M0). At the same time, interrupt flag bit CCP1IF (CCP2IF) is set.

### 14.4.1 CCP PIN CONFIGURATION

The user must configure the CCPx pin as an output by clearing the appropriate TRISC bit.

| | |
|---|---|
| **Note:** | Clearing the CCP1CON register will force the RC2/CCP1 compare output latch to the default low level. This is not the PORTC I/O data latch. |

### 14.4.2 TIMER1/TIMER3 MODE SELECTION

Timer1 and/or Timer3 must be running in Timer mode or Synchronized Counter mode if the CCP module is using the compare feature. In Asynchronous Counter mode, the compare operation may not work.

### 14.4.3 SOFTWARE INTERRUPT MODE

When generate software interrupt is chosen, the CCP1 pin is not affected. Only a CCP interrupt is generated (if enabled).

### 14.4.4 SPECIAL EVENT TRIGGER

In this mode, an internal hardware trigger is generated, which may be used to initiate an action.

The special event trigger output of CCP1 resets the TMR1 register pair. This allows the CCPR1 register to effectively be a 16-bit programmable period register for Timer1.

The special trigger output of CCPx resets either the TMR1 or TMR3 register pair. Additionally, the CCP2 Special Event Trigger will start an A/D conversion if the A/D module is enabled.

| | |
|---|---|
| **Note:** | The special event trigger from the CCP2 module will not set the Timer1 or Timer3 interrupt flag bits. |

**FIGURE 14-2: COMPARE MODE OPERATION BLOCK DIAGRAM**

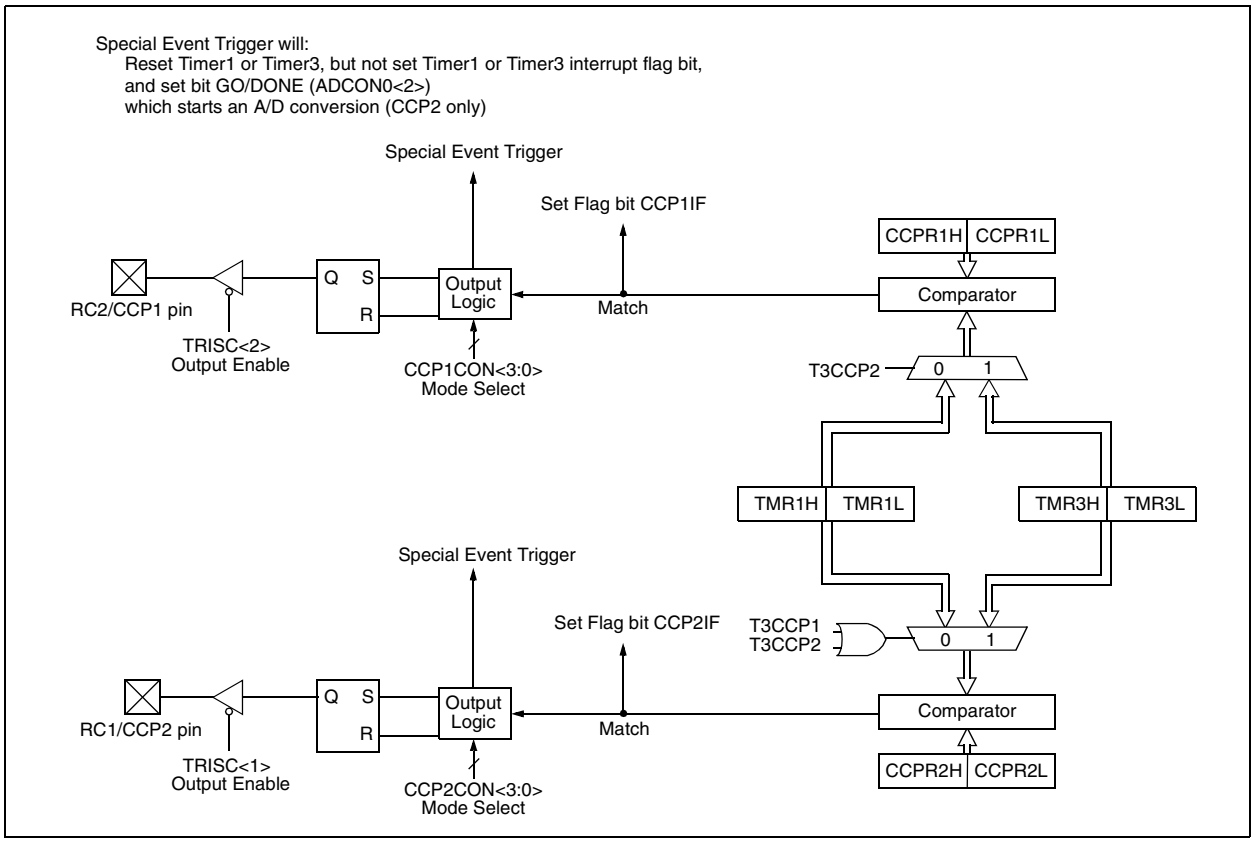



© 2006 Microchip Technology Inc.

**TABLE 14-3: REGISTERS ASSOCIATED WITH CAPTURE, COMPARE, TIMER1 AND TIMER3**

| Name | Bit 7 | Bit 6 | Bit 5 | Bit 4 | Bit 3 | Bit 2 | Bit 1 | Bit 0 | Value on POR, BOR | Value on All Other RESETS |
|---|---|---|---|---|---|---|---|---|---|---|
| INTCON | GIE/GIEH | PEIE/GIEL | TMR0IE | INT0IE | RBIE | TMR0IF | INT0IF | RBIF | 0000 000x | 0000 000u |
| PIR1 | PSPIF(1) | ADIF | RCIF | TXIF | SSPIF | CCP1IF | TMR2IF | TMR1IF | 0000 0000 | 0000 0000 |
| PIE1 | PSPIE(1) | ADIE | RCIE | TXIE | SSPIE | CCP1IE | TMR2IE | TMR1IE | 0000 0000 | 0000 0000 |
| IPR1 | PSPIP(1) | ADIP | RCIP | TXIP | SSPIP | CCP1IP | TMR2IP | TMR1IP | 0000 0000 | 0000 0000 |
| TRISC | PORTC Data Direction Register | | | | | | | | 1111 1111 | 1111 1111 |
| TMR1L | Holding Register for the Least Significant Byte of the 16-bit TMR1 Register | | | | | | | | xxxx xxxx | uuuu uuuu |
| TMR1H | Holding Register for the Most Significant Byte of the 16-bit TMR1 Register | | | | | | | | xxxx xxxx | uuuu uuuu |
| T1CON | RD16 | — | T1CKPS1 | T1CKPS0 | T1OSCEN | $\overline{\text{T1SYNC}}$ | TMR1CS | TMR1ON | 0-00 0000 | u-uu uuuu |
| CCPR1L | Capture/Compare/PWM Register1 (LSB) | | | | | | | | xxxx xxxx | uuuu uuuu |
| CCPR1H | Capture/Compare/PWM Register1 (MSB) | | | | | | | | xxxx xxxx | uuuu uuuu |
| CCP1CON | — | — | DC1B1 | DC1B0 | CCP1M3 | CCP1M2 | CCP1M1 | CCP1M0 | --00 0000 | --00 0000 |
| CCPR2L | Capture/Compare/PWM Register2 (LSB) | | | | | | | | xxxx xxxx | uuuu uuuu |
| CCPR2H | Capture/Compare/PWM Register2 (MSB) | | | | | | | | xxxx xxxx | uuuu uuuu |
| CCP2CON | — | — | DC2B1 | DC2B0 | CCP2M3 | CCP2M2 | CCP2M1 | CCP2M0 | --00 0000 | --00 0000 |
| PIR2 | — | — | — | EEIE | BCLIF | LVDIF | TMR3IF | CCP2IF | ---0 0000 | ---0 0000 |
| PIE2 | — | — | — | EEIF | BCLIE | LVDIE | TMR3IE | CCP2IE | ---0 0000 | ---0 0000 |
| IPR2 | — | — | — | EEIP | BCLIP | LVDIP | TMR3IP | CCP2IP | ---1 1111 | ---1 1111 |
| TMR3L | Holding Register for the Least Significant Byte of the 16-bit TMR3 Register | | | | | | | | xxxx xxxx | uuuu uuuu |
| TMR3H | Holding Register for the Most Significant Byte of the 16-bit TMR3 Register | | | | | | | | xxxx xxxx | uuuu uuuu |
| T3CON | RD16 | T3CCP2 | T3CKPS1 | T3CKPS0 | T3CCP1 | $\overline{\text{T3SYNC}}$ | TMR3CS | TMR3ON | 0000 0000 | uuuu uuuu |

Legend: x = unknown, u = unchanged, - = unimplemented, read as '0'. Shaded cells are not used by Capture and Timer1.

**Note 1:** The PSPIF, PSPIE and PSPIP bits are reserved on the PIC18F2x2 devices; always maintain these bits clear.

## 14.5 PWM Mode

In Pulse Width Modulation (PWM) mode, the CCP1 pin produces up to a 10-bit resolution PWM output. Since the CCP1 pin is multiplexed with the PORTC data latch, the TRISC<2> bit must be cleared to make the CCP1 pin an output.

| | |
|---|---|
| **Note:** | Clearing the CCP1CON register will force the CCP1 PWM output latch to the default low level. This is not the PORTC I/O data latch. |

Figure 14-3 shows a simplified block diagram of the CCP module in PWM mode.

For a step-by-step procedure on how to set up the CCP module for PWM operation, see Section 14.5.3.

**FIGURE 14-3: SIMPLIFIED PWM BLOCK DIAGRAM**

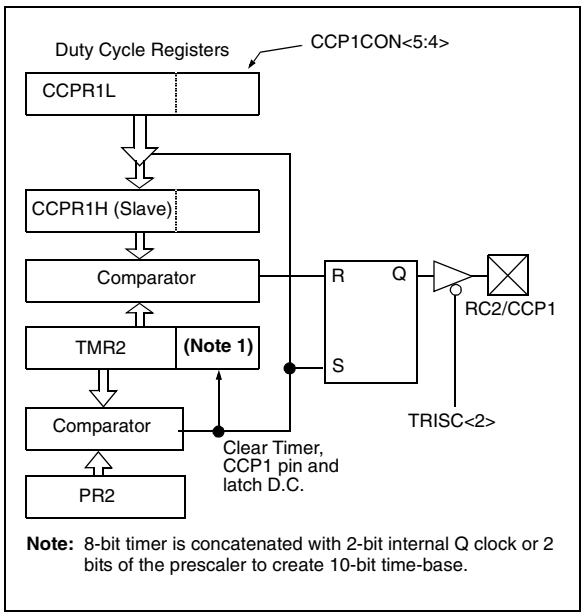


A PWM output (Figure 14-4) has a time-base (period) and a time that the output stays high (duty cycle). The frequency of the PWM is the inverse of the period (1/period).

**FIGURE 14-4: PWM OUTPUT**

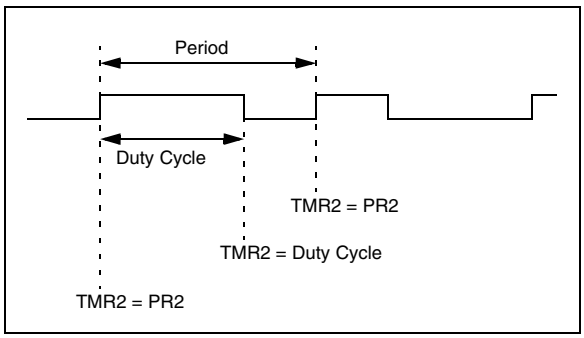


### 14.5.1 PWM PERIOD

The PWM period is specified by writing to the PR2 register. The PWM period can be calculated using the following formula:

$$\text{PWM period} = (PR2) + 1] \cdot 4 \cdot T_{OSC} \cdot (\text{TMR2 prescale value})$$

PWM frequency is defined as 1 / [PWM period].

When TMR2 is equal to PR2, the following three events occur on the next increment cycle:

- TMR2 is cleared
- The CCP1 pin is set (exception: if PWM duty cycle = 0%, the CCP1 pin will not be set)
- The PWM duty cycle is latched from CCPR1L into CCPR1H

| | |
|---|---|
| **Note:** | The Timer2 postscaler (see Section 12.0) is not used in the determination of the PWM frequency. The postscaler could be used to have a servo update rate at a different frequency than the PWM output. |

### 14.5.2 PWM DUTY CYCLE

The PWM duty cycle is specified by writing to the CCPR1L register and to the CCP1CON<5:4> bits. Up to 10-bit resolution is available. The CCPR1L contains the eight MSbs and the CCP1CON<5:4> contains the two LSbs. This 10-bit value is represented by CCPR1L:CCP1CON<5:4>. The following equation is used to calculate the PWM duty cycle in time:

$$\text{PWM duty cycle} = (CCPR1L{:}CCP1CON\langle 5{:}4\rangle) \cdot T_{OSC} \cdot (\text{TMR2 prescale value})$$

CCPR1L and CCP1CON<5:4> can be written to at any time, but the duty cycle value is not latched into CCPR1H until after a match between PR2 and TMR2 occurs (i.e., the period is complete). In PWM mode, CCPR1H is a read only register.

The CCPR1H register and a 2-bit internal latch are used to double buffer the PWM duty cycle. This double buffering is essential for glitchless PWM operation.

When the CCPR1H and 2-bit latch match TMR2 concatenated with an internal 2-bit Q clock or 2 bits of the TMR2 prescaler, the CCP1 pin is cleared.

The maximum PWM resolution (bits) for a given PWM frequency is given by the equation:

$$\text{PWM Resolution (max)} = \frac{\log\left(\frac{F_{OSC}}{F_{PWM}}\right)}{\log(2)} \text{bits}$$

| | |
|---|---|
| **Note:** | If the PWM duty cycle value is longer than the PWM period, the CCP1 pin will not be cleared. |


© 2006 Microchip Technology Inc.

### 14.5.3 SETUP FOR PWM OPERATION

The following steps should be taken when configuring the CCP module for PWM operation:

1. Set the PWM period by writing to the PR2 register.
2. Set the PWM duty cycle by writing to the CCPR1L register and CCP1CON<5:4> bits.
3. Make the CCP1 pin an output by clearing the TRISC<2> bit.
4. Set the TMR2 prescale value and enable Timer2 by writing to T2CON.
5. Configure the CCP1 module for PWM operation.

**TABLE 14-4: EXAMPLE PWM FREQUENCIES AND RESOLUTIONS AT 40 MHz**

| PWM Frequency | 2.44 kHz | 9.77 kHz | 39.06 kHz | 156.25 kHz | 312.50 kHz | 416.67 kHz |
|---|---|---|---|---|---|---|
| Timer Prescaler (1, 4, 16) | 16 | 4 | 1 | 1 | 1 | 1 |
| PR2 Value | 0xFF | 0xFF | 0xFF | 0x3F | 0x1F | 0x17 |
| Maximum Resolution (bits) | 14 | 12 | 10 | 8 | 7 | 6.58 |

**TABLE 14-5: REGISTERS ASSOCIATED WITH PWM AND TIMER2**

| Name | Bit 7 | Bit 6 | Bit 5 | Bit 4 | Bit 3 | Bit 2 | Bit 1 | Bit 0 | Value on POR, BOR | Value on All Other RESETS |
|---|---|---|---|---|---|---|---|---|---|---|
| INTCON | GIE/GIEH | PEIE/GIEL | TMR0IE | INT0IE | RBIE | TMR0IF | INT0IF | RBIF | 0000 000x | 0000 000u |
| PIR1 | PSPIF(1) | ADIF | RCIF | TXIF | SSPIF | CCP1IF | TMR2IF | TMR1IF | 0000 0000 | 0000 0000 |
| PIE1 | PSPIE(1) | ADIE | RCIE | TXIE | SSPIE | CCP1IE | TMR2IE | TMR1IE | 0000 0000 | 0000 0000 |
| IPR1 | PSPIP(1) | ADIP | RCIP | TXIP | SSPIP | CCP1IP | TMR2IP | TMR1IP | 0000 0000 | 0000 0000 |
| TRISC | PORTC Data Direction Register | | | | | | | | 1111 1111 | 1111 1111 |
| TMR2 | Timer2 Module Register | | | | | | | | 0000 0000 | 0000 0000 |
| PR2 | Timer2 Module Period Register | | | | | | | | 1111 1111 | 1111 1111 |
| T2CON | — | TOUTPS3 | TOUTPS2 | TOUTPS1 | TOUTPS0 | TMR2ON | T2CKPS1 | T2CKPS0 | -000 0000 | -000 0000 |
| CCPR1L | Capture/Compare/PWM Register1 (LSB) | | | | | | | | xxxx xxxx | uuuu uuuu |
| CCPR1H | Capture/Compare/PWM Register1 (MSB) | | | | | | | | xxxx xxxx | uuuu uuuu |
| CCP1CON | — | — | DC1B1 | DC1B0 | CCP1M3 | CCP1M2 | CCP1M1 | CCP1M0 | --00 0000 | --00 0000 |
| CCPR2L | Capture/Compare/PWM Register2 (LSB) | | | | | | | | xxxx xxxx | uuuu uuuu |
| CCPR2H | Capture/Compare/PWM Register2 (MSB) | | | | | | | | xxxx xxxx | uuuu uuuu |
| CCP2CON | — | — | DC2B1 | DC2B0 | CCP2M3 | CCP2M2 | CCP2M1 | CCP2M0 | --00 0000 | --00 0000 |

Legend: x = unknown, u = unchanged, - = unimplemented, read as '0'. Shaded cells are not used by PWM and Timer2.

**Note 1:** The PSPIF, PSPIE and PSPIP bits are reserved on the PIC18F2X2 devices; always maintain these bits clear.

**NOTES:**


© 2006 Microchip Technology Inc.

# 15.0 MASTER SYNCHRONOUS SERIAL PORT (MSSP) MODULE

## 15.1 Master SSP (MSSP) Module Overview

The Master Synchronous Serial Port (MSSP) module is a serial interface useful for communicating with other peripheral or microcontroller devices. These peripheral devices may be serial EEPROMs, shift registers, display drivers, A/D converters, etc. The MSSP module can operate in one of two modes:

- Serial Peripheral Interface (SPI)
- Inter-Integrated Circuit ($I^2C$)
  - Full Master mode
  - Slave mode (with general address call)

The $I^2C$ interface supports the following modes in hardware:

- Master mode
- Multi-Master mode
- Slave mode

## 15.2 Control Registers

The MSSP module has three associated registers. These include a status register (SSPSTAT) and two control registers (SSPCON1 and SSPCON2). The use of these registers and their individual configuration bits differ significantly, depending on whether the MSSP module is operated in SPI or $I^2C$ mode.

Additional details are provided under the individual sections.

## 15.3 SPI Mode

The SPI mode allows 8-bits of data to be synchronously transmitted and received, simultaneously. All four modes of SPI are supported. To accomplish communication, typically three pins are used:

- Serial Data Out (SDO) - RC5/SDO
- Serial Data In (SDI) - RC4/SDI/SDA
- Serial Clock (SCK) - RC3/SCK/SCL/LVDIN

Additionally, a fourth pin may be used when in a Slave mode of operation:

- Slave Select ($\overline{SS}$) - RA5/$\overline{SS}$/AN4

Figure 15-1 shows the block diagram of the MSSP module when operating in SPI mode.

**FIGURE 15-1: MSSP BLOCK DIAGRAM (SPI MODE)**

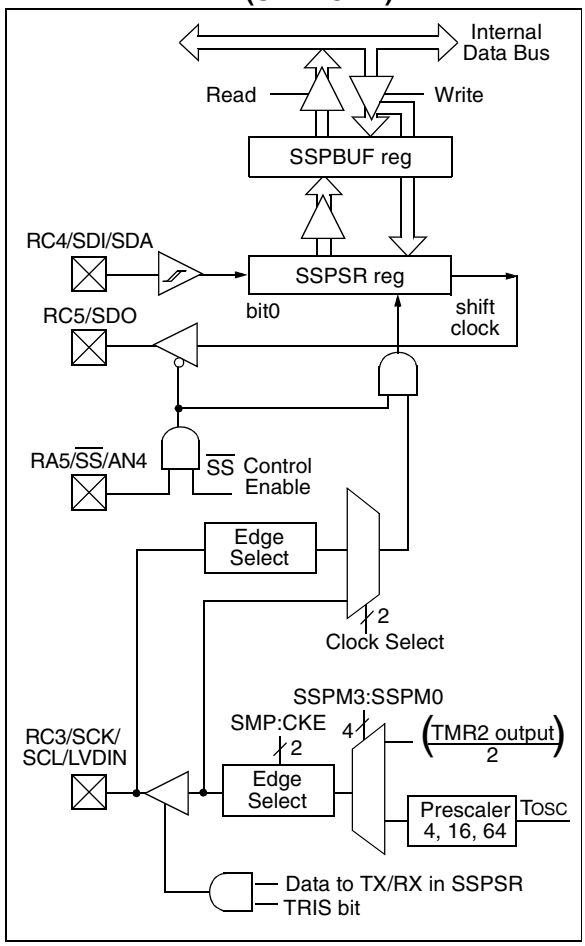

### 15.3.1 REGISTERS

The MSSP module has four registers for SPI mode operation. These are:

- MSSP Control Register1 (SSPCON1)
- MSSP Status Register (SSPSTAT)
- Serial Receive/Transmit Buffer (SSPBUF)
- MSSP Shift Register (SSPSR) - Not directly accessible

SSPCON1 and SSPSTAT are the control and status registers in SPI mode operation. The SSPCON1 register is readable and writable. The lower 6 bits of the SSPSTAT are read only. The upper two bits of the SSPSTAT are read/write.

SSPSR is the shift register used for shifting data in or out. SSPBUF is the buffer register to which data bytes are written to or read from.

In receive operations, SSPSR and SSPBUF together create a double buffered receiver. When SSPSR receives a complete byte, it is transferred to SSPBUF and the SSPIF interrupt is set.

During transmission, the SSPBUF is not double buffered. A write to SSPBUF will write to both SSPBUF and SSPSR.

**REGISTER 15-1: SSPSTAT: MSSP STATUS REGISTER (SPI MODE)**

| R/W-0 | R/W-0 | R-0 | R-0 | R-0 | R-0 | R-0 | R-0 |
|---|---|---|---|---|---|---|---|
| SMP | CKE | D/$\overline{A}$ | P | S | R/$\overline{W}$ | UA | BF |
| bit 7 | | | | | | | bit 0 |

bit 7 **SMP:** Sample bit
SPI Master mode:
1 = Input data sampled at end of data output time
0 = Input data sampled at middle of data output time
SPI Slave mode:
SMP must be cleared when SPI is used in Slave mode

bit 6 **CKE:** SPI Clock Edge Select
When CKP = 0:
1 = Data transmitted on rising edge of SCK
0 = Data transmitted on falling edge of SCK
When CKP = 1:
1 = Data transmitted on falling edge of SCK
0 = Data transmitted on rising edge of SCK

bit 5 **D/$\overline{A}$:** Data/$\overline{\text{Address}}$ bit
Used in $I^2C$ mode only

bit 4 **P:** STOP bit
Used in $I^2C$ mode only. This bit is cleared when the MSSP module is disabled, SSPEN is cleared.

bit 3 **S:** START bit
Used in $I^2C$ mode only

bit 2 **R/$\overline{W}$:** Read/Write bit information
Used in $I^2C$ mode only

bit 1 **UA:** Update Address
Used in $I^2C$ mode only

bit 0 **BF:** Buffer Full Status bit (Receive mode only)
1 = Receive complete, SSPBUF is full
0 = Receive not complete, SSPBUF is empty

| Legend: | | | |
|---|---|---|---|
| R = Readable bit | W = Writable bit | U = Unimplemented bit, read as ‘0’ | |
| - n = Value at POR | ’1’ = Bit is set | ’0’ = Bit is cleared | x = Bit is unknown |


© 2006 Microchip Technology Inc.

**REGISTER 15-2: SSPCON1: MSSP CONTROL REGISTER1 (SPI MODE)**

| R/W-0 | R/W-0 | R/W-0 | R/W-0 | R/W-0 | R/W-0 | R/W-0 | R/W-0 |
|---|---|---|---|---|---|---|---|
| WCOL | SSPOV | SSPEN | CKP | SSPM3 | SSPM2 | SSPM1 | SSPM0 |
| bit 7 | | | | | | | bit 0 |

bit 7 **WCOL:** Write Collision Detect bit (Transmit mode only)

1 = The SSPBUF register is written while it is still transmitting the previous word (must be cleared in software)

0 = No collision

bit 6 **SSPOV:** Receive Overflow Indicator bit

SPI Slave mode:

1 = A new byte is received while the SSPBUF register is still holding the previous data. In case of overflow, the data in SSPSR is lost. Overflow can only occur in Slave mode.The user must read the SSPBUF, even if only transmitting data, to avoid setting overflow (must be cleared in software).

0 = No overflow

**Note:** In Master mode, the overflow bit is not set since each new reception (and transmission) is initiated by writing to the SSPBUF register.

bit 5 **SSPEN:** Synchronous Serial Port Enable bit

1 = Enables serial port and configures SCK, SDO, SDI, and $\overline{SS}$ as serial port pins

0 = Disables serial port and configures these pins as I/O port pins

**Note:** When enabled, these pins must be properly configured as input or output.

bit 4 **CKP:** Clock Polarity Select bit

1 = IDLE state for clock is a high level

0 = IDLE state for clock is a low level

bit 3-0 **SSPM3:SSPM0:** Synchronous Serial Port Mode Select bits

0101 = SPI Slave mode, clock = SCK pin, $\overline{SS}$ pin control disabled, $\overline{SS}$ can be used as I/O pin

0100 = SPI Slave mode, clock = SCK pin, $\overline{SS}$ pin control enabled

0011 = SPI Master mode, clock = TMR2 output/2

0010 = SPI Master mode, clock = FOSC/64

0001 = SPI Master mode, clock = FOSC/16

0000 = SPI Master mode, clock = FOSC/4

**Note:** Bit combinations not specifically listed here are either reserved, or implemented in $I^2C$ mode only.

| Legend: | | | |
|---|---|---|---|
| R = Readable bit | W = Writable bit | U = Unimplemented bit, read as ‘0’ | |
| - n = Value at POR | ’1’ = Bit is set | ’0’ = Bit is cleared | x = Bit is unknown |

### 15.3.2 OPERATION

When initializing the SPI, several options need to be specified. This is done by programming the appropriate control bits (SSPCON1<5:0>) and SSPSTAT<7:6>. These control bits allow the following to be specified:

- Master mode (SCK is the clock output)
- Slave mode (SCK is the clock input)
- Clock Polarity (IDLE state of SCK)
- Data input sample phase (middle or end of data output time)
- Clock edge (output data on rising/falling edge of SCK)
- Clock Rate (Master mode only)
- Slave Select mode (Slave mode only)

The MSSP consists of a transmit/receive Shift Register (SSPSR) and a buffer register (SSPBUF). The SSPSR shifts the data in and out of the device, MSb first. The SSPBUF holds the data that was written to the SSPSR, until the received data is ready. Once the 8 bits of data have been received, that byte is moved to the SSPBUF register. Then the buffer full detect bit, BF (SSPSTAT<0>), and the interrupt flag bit, SSPIF, are set. This double buffering of the received data (SSPBUF) allows the next byte to start reception before reading the data that was just received. Any write to the SSPBUF register during transmission/reception of data will be ignored, and the write collision detect bit, WCOL (SSPCON1<7>), will be set. User software must clear the WCOL bit so that it can be determined if the following write(s) to the SSPBUF register completed successfully.

When the application software is expecting to receive valid data, the SSPBUF should be read before the next byte of data to transfer is written to the SSPBUF. Buffer full bit, BF (SSPSTAT<0>), indicates when SSPBUF has been loaded with the received data (transmission is complete). When the SSPBUF is read, the BF bit is cleared. This data may be irrelevant if the SPI is only a transmitter. Generally, the MSSP Interrupt is used to determine when the transmission/reception has completed. The SSPBUF must be read and/or written. If the interrupt method is not going to be used, then software polling can be done to ensure that a write collision does not occur. Example 15-1 shows the loading of the SSPBUF (SSPSR) for data transmission.

The SSPSR is not directly readable or writable, and can only be accessed by addressing the SSPBUF register. Additionally, the MSSP status register (SSPSTAT) indicates the various status conditions.

**EXAMPLE 15-1: LOADING THE SSPBUF (SSPSR) REGISTER**

```
LOOP BTFSS SSPSTAT, BF    ;Has data been received(transmit complete)?
     BRA   LOOP           ;No
     MOVF  SSPBUF, W      ;WREG reg = contents of SSPBUF
     MOVWF RXDATA         ;Save in user RAM, if data is meaningful
     MOVF  TXDATA, W      ;W reg = contents of TXDATA
     MOVWF SSPBUF         ;New data to xmit
```


© 2006 Microchip Technology Inc.

### 15.3.3 ENABLING SPI I/O

To enable the serial port, SSP Enable bit, SSPEN (SSPCON1<5>), must be set. To reset or reconfigure SPI mode, clear the SSPEN bit, re-initialize the SSPCON registers, and then set the SSPEN bit. This configures the SDI, SDO, SCK, and $\overline{SS}$ pins as serial port pins. For the pins to behave as the serial port function, some must have their data direction bits (in the TRIS register) appropriately programmed. That is:

- SDI is automatically controlled by the SPI module
- SDO must have TRISC<5> bit cleared
- SCK (Master mode) must have TRISC<3> bit cleared
- SCK (Slave mode) must have TRISC<3> bit set
- $\overline{SS}$ must have TRISC<4> bit set

Any serial port function that is not desired may be overridden by programming the corresponding data direction (TRIS) register to the opposite value.

### 15.3.4 TYPICAL CONNECTION

Figure 15-2 shows a typical connection between two microcontrollers. The master controller (Processor 1) initiates the data transfer by sending the SCK signal. Data is shifted out of both shift registers on their programmed clock edge, and latched on the opposite edge of the clock. Both processors should be programmed to the same Clock Polarity (CKP), then both controllers would send and receive data at the same time. Whether the data is meaningful (or dummy data) depends on the application software. This leads to three scenarios for data transmission:

- Master sends data — Slave sends dummy data
- Master sends data — Slave sends data
- Master sends dummy data — Slave sends data

**FIGURE 15-2: SPI MASTER/SLAVE CONNECTION**

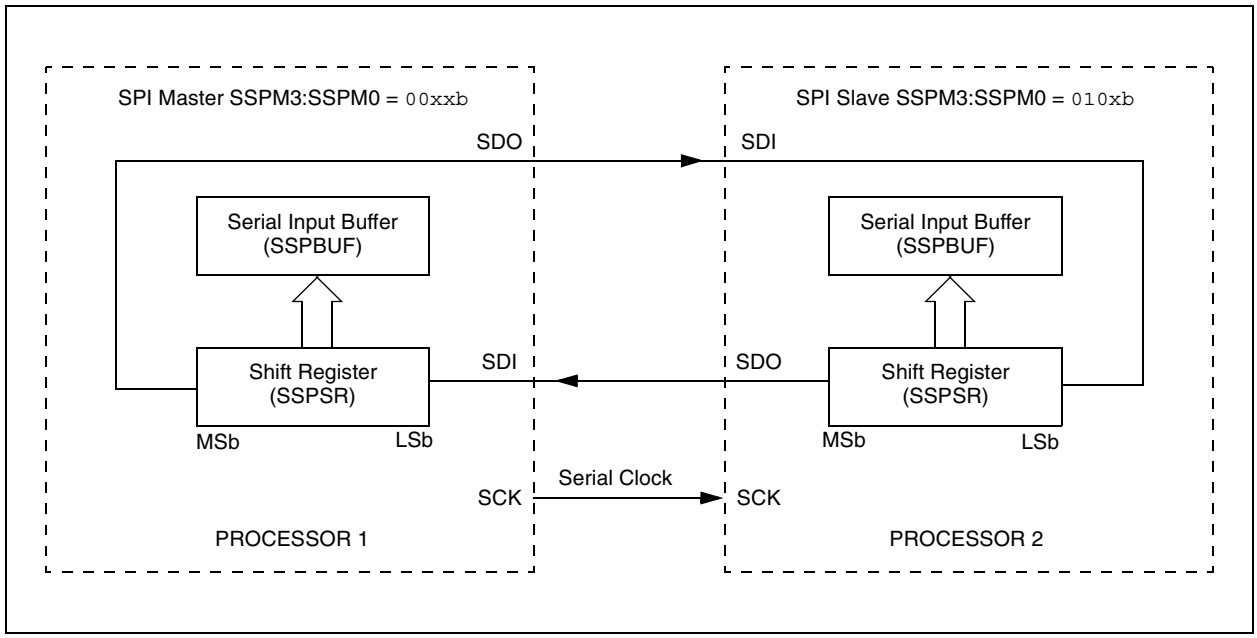

### 15.3.5 MASTER MODE

The master can initiate the data transfer at any time because it controls the SCK. The master determines when the slave (Processor 2, Figure 15-2) is to broadcast data by the software protocol.

In Master mode, the data is transmitted/received as soon as the SSPBUF register is written to. If the SPI is only going to receive, the SDO output could be disabled (programmed as an input). The SSPSR register will continue to shift in the signal present on the SDI pin at the programmed clock rate. As each byte is received, it will be loaded into the SSPBUF register as if a normal received byte (interrupts and status bits appropriately set). This could be useful in receiver applications as a “Line Activity Monitor” mode.

The clock polarity is selected by appropriately programming the CKP bit (SSPCON1<4>). This then, would give waveforms for SPI communication as shown in Figure 15-3, Figure 15-5, and Figure 15-6, where the MSB is transmitted first. In Master mode, the SPI clock rate (bit rate) is user programmable to be one of the following:

- FOSC/4 (or TCY)
- FOSC/16 (or 4 • TCY)
- FOSC/64 (or 16 • TCY)
- Timer2 output/2

This allows a maximum data rate (at 40 MHz) of 10.00 Mbps.

Figure 15-3 shows the waveforms for Master mode. When the CKE bit is set, the SDO data is valid before there is a clock edge on SCK. The change of the input sample is shown based on the state of the SMP bit. The time when the SSPBUF is loaded with the received data is shown.

**FIGURE 15-3: SPI MODE WAVEFORM (MASTER MODE)**

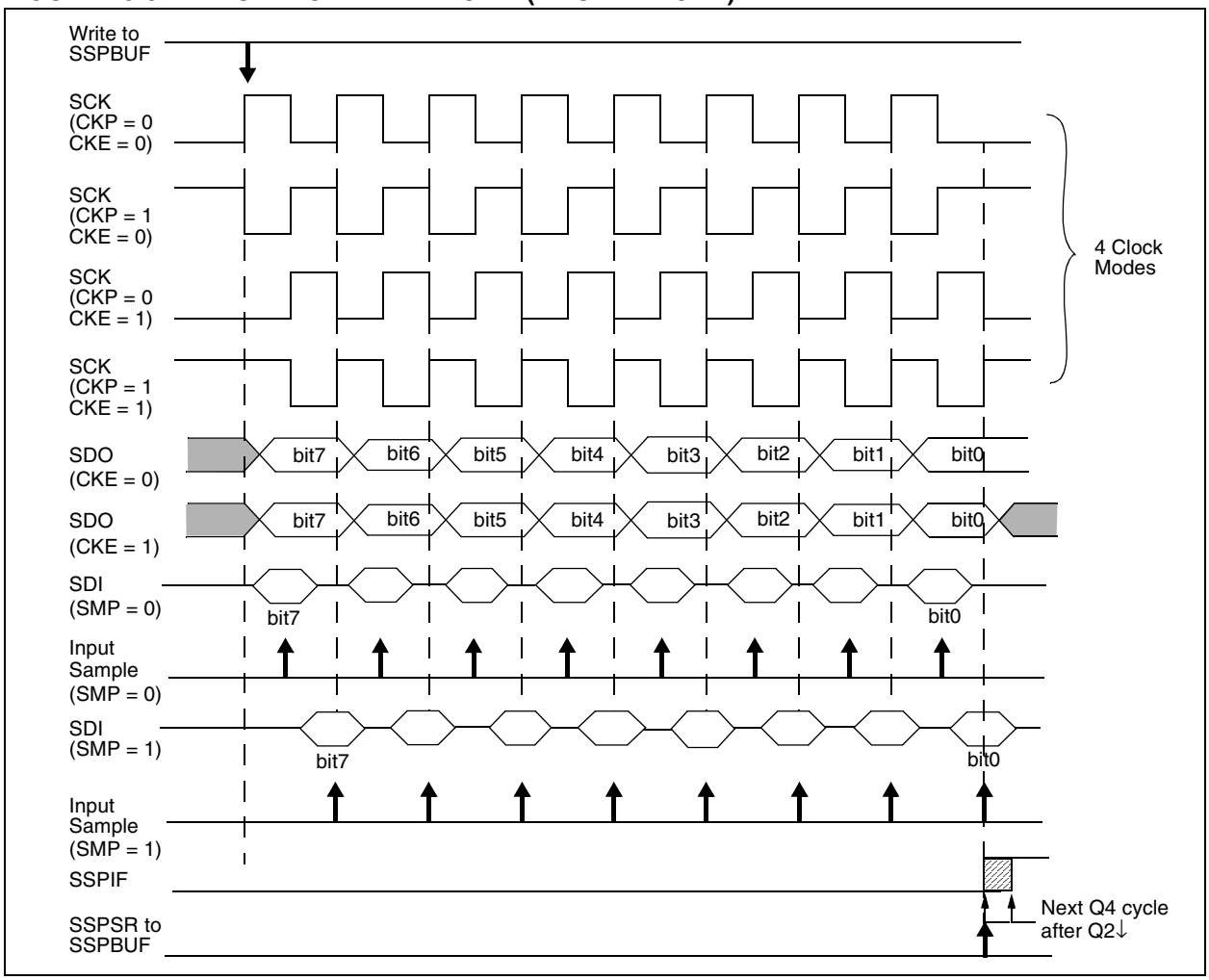



© 2006 Microchip Technology Inc.

### 15.3.6 SLAVE MODE

In Slave mode, the data is transmitted and received as the external clock pulses appear on SCK. When the last bit is latched, the SSPIF interrupt flag bit is set.

While in Slave mode, the external clock is supplied by the external clock source on the SCK pin. This external clock must meet the minimum high and low times as specified in the electrical specifications.

While in SLEEP mode, the slave can transmit/receive data. When a byte is received, the device will wake-up from sleep.

### 15.3.7 SLAVE SELECT SYNCHRONIZATION

The $\overline{SS}$ pin allows a Synchronous Slave mode. The SPI must be in Slave mode with $\overline{SS}$ pin control enabled (SSPCON1<3:0> = 04h). The pin must not be driven low for the $\overline{SS}$ pin to function as an input. The Data Latch must be high. When the $\overline{SS}$ pin is low, transmission and reception are enabled and the SDO pin is driven. When the $\overline{SS}$ pin goes high, the SDO pin is no longer driven, even if in the middle of a transmitted byte, and becomes a floating output. External pull-up/pull-down resistors may be desirable, depending on the application.

> **Note 1:** When the SPI is in Slave mode with $\overline{SS}$ pin control enabled (SSPCON<3:0> = `0100`), the SPI module will reset if the $\overline{SS}$ pin is set to $V_{DD}$.
>
> **2:** If the SPI is used in Slave mode with CKE set, then the $\overline{SS}$ pin control must be enabled.

When the SPI module resets, the bit counter is forced to 0. This can be done by either forcing the $\overline{SS}$ pin to a high level or clearing the SSPEN bit.

To emulate two-wire communication, the SDO pin can be connected to the SDI pin. When the SPI needs to operate as a receiver the SDO pin can be configured as an input. This disables transmissions from the SDO. The SDI can always be left as an input (SDI function), since it cannot create a bus conflict.

**FIGURE 15-4: SLAVE SYNCHRONIZATION WAVEFORM**

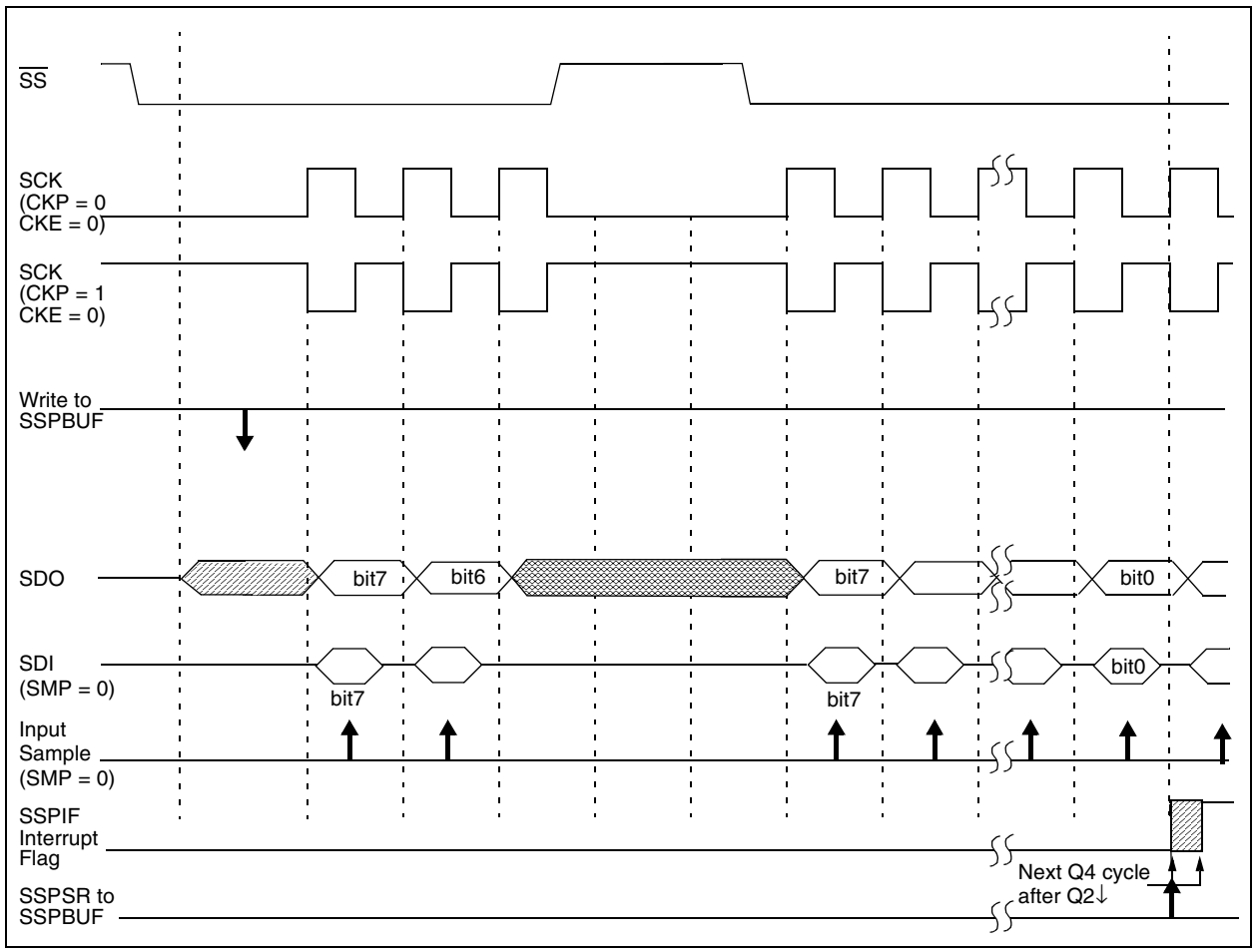

**FIGURE 15-5: SPI MODE WAVEFORM (SLAVE MODE WITH CKE = 0)**

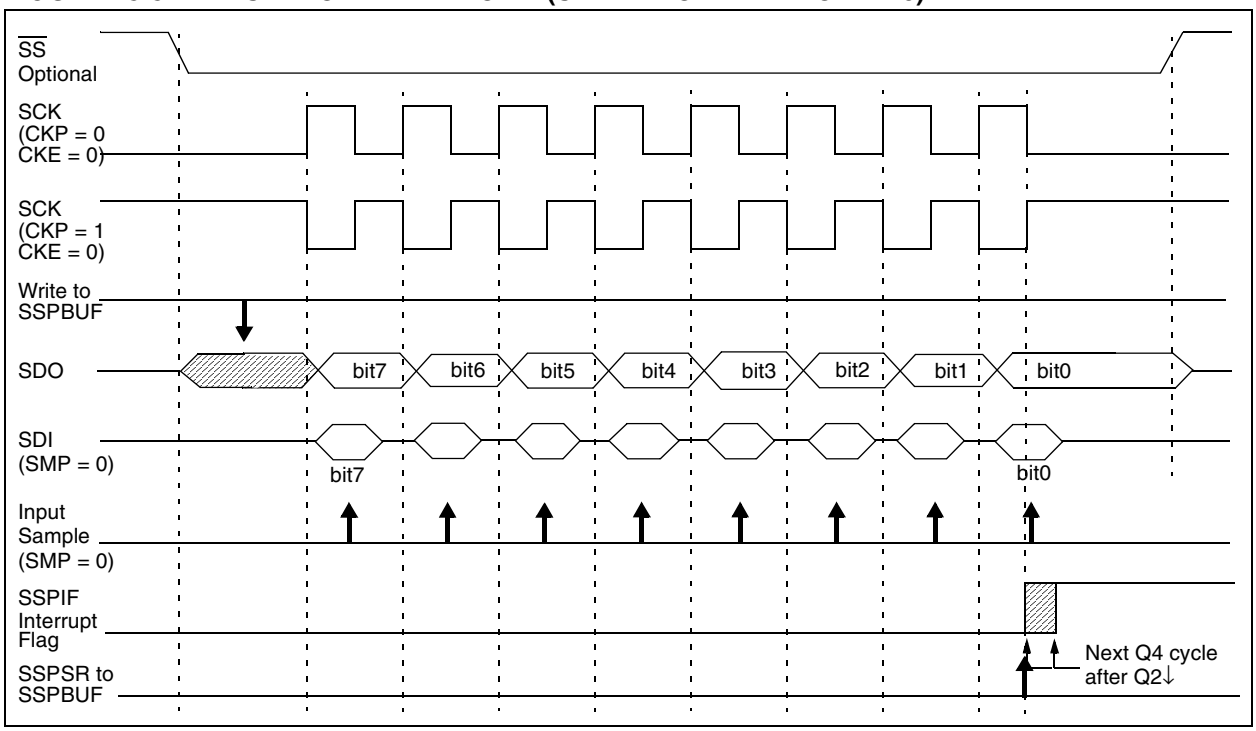


**FIGURE 15-6: SPI MODE WAVEFORM (SLAVE MODE WITH CKE = 1)**

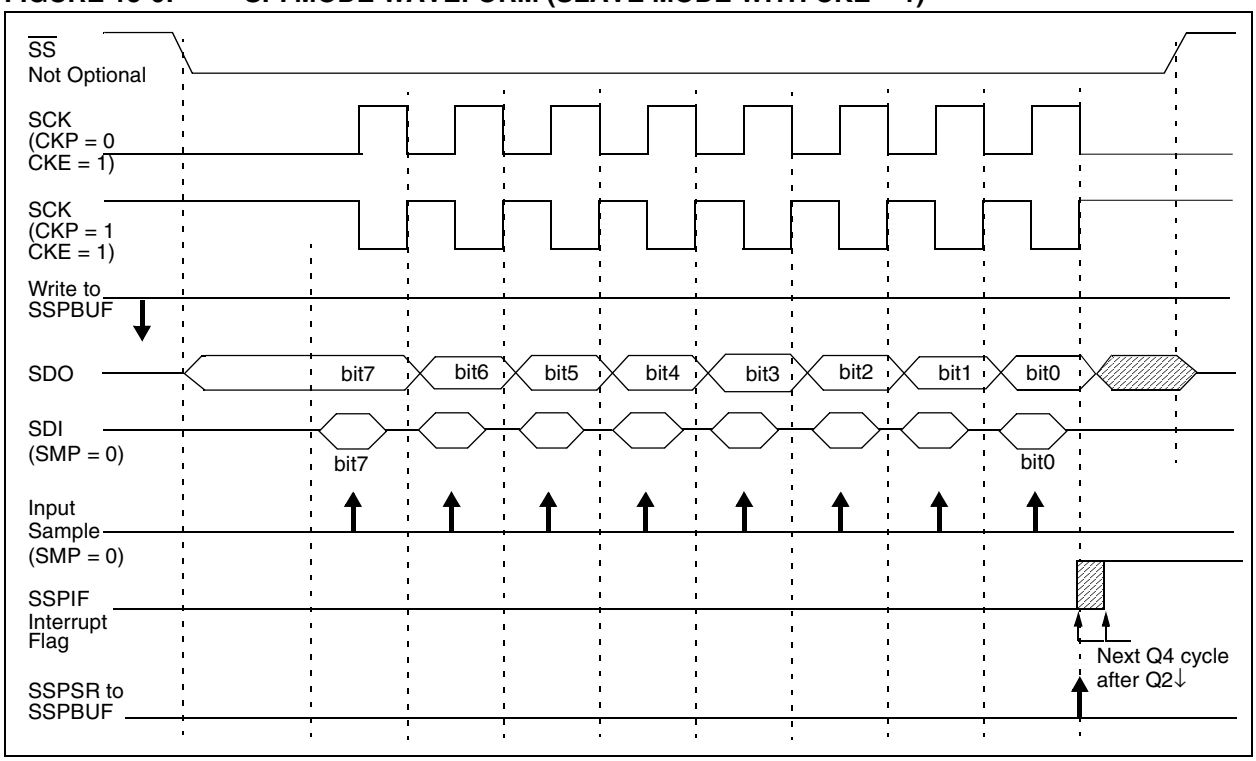



© 2006 Microchip Technology Inc.

### 15.3.8 SLEEP OPERATION

In Master mode, all module clocks are halted and the transmission/reception will remain in that state until the device wakes from SLEEP. After the device returns to Normal mode, the module will continue to transmit/receive data.

In Slave mode, the SPI transmit/receive shift register operates asynchronously to the device. This allows the device to be placed in SLEEP mode and data to be shifted into the SPI transmit/receive shift register. When all 8 bits have been received, the MSSP interrupt flag bit will be set and if enabled, will wake the device from SLEEP.

### 15.3.9 EFFECTS OF A RESET

A RESET disables the MSSP module and terminates the current transfer.

### 15.3.10 BUS MODE COMPATIBILITY

Table 15-1 shows the compatibility between the standard SPI modes and the states the CKP and CKE control bits.

**TABLE 15-1: SPI BUS MODES**

| Standard SPI Mode Terminology | Control Bits State | |
|---|---|---|
| | CKP | CKE |
| 0, 0 | 0 | 1 |
| 0, 1 | 0 | 0 |
| 1, 0 | 1 | 1 |
| 1, 1 | 1 | 0 |

There is also a SMP bit which controls when the data is sampled.

**TABLE 15-2: REGISTERS ASSOCIATED WITH SPI OPERATION**

| Name | Bit 7 | Bit 6 | Bit 5 | Bit 4 | Bit 3 | Bit 2 | Bit 1 | Bit 0 | Value on POR, BOR | Value on All Other RESETS |
|---|---|---|---|---|---|---|---|---|---|---|
| INTCON | GIE/GIEH | PEIE/GIEL | TMR0IE | INT0IE | RBIE | TMR0IF | INT0IF | RBIF | 0000 000x | 0000 000u |
| PIR1 | PSPIF(1) | ADIF | RCIF | TXIF | SSPIF | CCP1IF | TMR2IF | TMR1IF | 0000 0000 | 0000 0000 |
| PIE1 | PSPIE(1) | ADIE | RCIE | TXIE | SSPIE | CCP1IE | TMR2IE | TMR1IE | 0000 0000 | 0000 0000 |
| IPR1 | PSPIP(1) | ADIP | RCIP | TXIP | SSPIP | CCP1IP | TMR2IP | TMR1IP | 0000 0000 | 0000 0000 |
| TRISC | PORTC Data Direction Register | | | | | | | | 1111 1111 | 1111 1111 |
| SSPBUF | Synchronous Serial Port Receive Buffer/Transmit Register | | | | | | | | xxxx xxxx | uuuu uuuu |
| SSPCON | WCOL | SSPOV | SSPEN | CKP | SSPM3 | SSPM2 | SSPM1 | SSPM0 | 0000 0000 | 0000 0000 |
| TRISA | — | PORTA Data Direction Register | | | | | | | -111 1111 | -111 1111 |
| SSPSTAT | SMP | CKE | D/$\overline{A}$ | P | S | R/$\overline{W}$ | UA | BF | 0000 0000 | 0000 0000 |

Legend: x = unknown, u = unchanged, - = unimplemented, read as '0'. Shaded cells are not used by the MSSP in SPI mode.

**Note 1:** The PSPIF, PSPIE and PSPIP bits are reserved on the PIC18C2X2 devices; always maintain these bits clear.

## 15.4 I²C Mode

The MSSP module in I²C mode fully implements all master and slave functions (including general call support) and provides interrupts on START and STOP bits in hardware to determine a free bus (multi-master function). The MSSP module implements the Standard mode specifications, as well as 7-bit and 10-bit addressing.

Two pins are used for data transfer:

- Serial clock (SCL) - RC3/SCK/SCL
- Serial data (SDA) - RC4/SDI/SDA

The user must configure these pins as inputs or outputs through the TRISC<4:3> bits.

**FIGURE 15-7: MSSP BLOCK DIAGRAM (I²C MODE)**

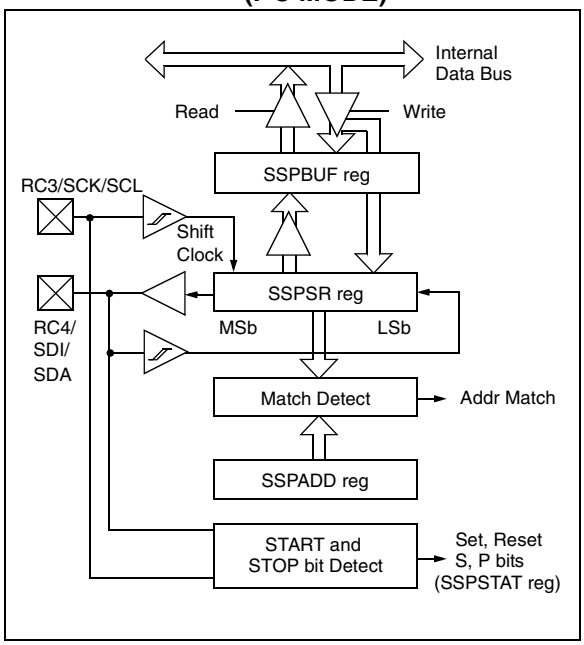


### 15.4.1 REGISTERS

The MSSP module has six registers for I²C operation. These are:

- MSSP Control Register1 (SSPCON1)
- MSSP Control Register2 (SSPCON2)
- MSSP Status Register (SSPSTAT)
- Serial Receive/Transmit Buffer (SSPBUF)
- MSSP Shift Register (SSPSR) - Not directly accessible
- MSSP Address Register (SSPADD)

SSPCON, SSPCON2 and SSPSTAT are the control and status registers in I²C mode operation. The SSPCON and SSPCON2 registers are readable and writable. The lower 6 bits of the SSPSTAT are read only. The upper two bits of the SSPSTAT are read/write.

SSPSR is the shift register used for shifting data in or out. SSPBUF is the buffer register to which data bytes are written to or read from.

SSPADD register holds the slave device address when the SSP is configured in I²C Slave mode. When the SSP is configured in Master mode, the lower seven bits of SSPADD act as the baud rate generator reload value.

In receive operations, SSPSR and SSPBUF together, create a double buffered receiver. When SSPSR receives a complete byte, it is transferred to SSPBUF and the SSPIF interrupt is set.

During transmission, the SSPBUF is not double buffered. A write to SSPBUF will write to both SSPBUF and SSPSR.


© 2006 Microchip Technology Inc.

## REGISTER 15-3: SSPSTAT: MSSP STATUS REGISTER ($I^2C$ MODE)

| R/W-0 | R/W-0 | R-0 | R-0 | R-0 | R-0 | R-0 | R-0 |
|---|---|---|---|---|---|---|---|
| SMP | CKE | D/$\overline{A}$ | P | S | R/$\overline{W}$ | UA | BF |
| bit 7 | | | | | | | bit 0 |

bit 7 **SMP:** Slew Rate Control bit
In Master or Slave mode:
1 = Slew rate control disabled for Standard Speed mode (100 kHz and 1 MHz)
0 = Slew rate control enabled for High Speed mode (400 kHz)

bit 6 **CKE:** SMBus Select bit
In Master or Slave mode:
1 = Enable SMBus specific inputs
0 = Disable SMBus specific inputs

bit 5 **D/$\overline{A}$:** Data/$\overline{\text{Address}}$ bit
In Master mode:
Reserved
In Slave mode:
1 = Indicates that the last byte received or transmitted was data
0 = Indicates that the last byte received or transmitted was address

bit 4 **P:** STOP bit
1 = Indicates that a STOP bit has been detected last
0 = STOP bit was not detected last
**Note:** This bit is cleared on RESET and when SSPEN is cleared.

bit 3 **S:** START bit
1 = Indicates that a start bit has been detected last
0 = START bit was not detected last
**Note:** This bit is cleared on RESET and when SSPEN is cleared.

bit 2 **R/$\overline{W}$:** Read/Write bit Information ($I^2C$ mode only)
In Slave mode:
1 = Read
0 = Write
**Note:** This bit holds the R/W bit information following the last address match. This bit is only valid from the address match to the next START bit, STOP bit, or not $\overline{\text{ACK}}$ bit.
In Master mode:
1 = Transmit is in progress
0 = Transmit is not in progress
**Note:** ORing this bit with SEN, RSEN, PEN, RCEN, or ACKEN will indicate if the MSSP is in IDLE mode.

bit 1 **UA:** Update Address (10-bit Slave mode only)
1 = Indicates that the user needs to update the address in the SSPADD register
0 = Address does not need to be updated

bit 0 **BF:** Buffer Full Status bit
In Transmit mode:
1 = Receive complete, SSPBUF is full
0 = Receive not complete, SSPBUF is empty
In Receive mode:
1 = Data transmit in progress (does not include the $\overline{\text{ACK}}$ and STOP bits), SSPBUF is full
0 = Data transmit complete (does not include the $\overline{\text{ACK}}$ and STOP bits), SSPBUF is empty

| Legend: | | | |
|---|---|---|---|
| R = Readable bit | W = Writable bit | U = Unimplemented bit, read as ‘0’ | |
| - n = Value at POR | ’1’ = Bit is set | ’0’ = Bit is cleared | x = Bit is unknown |

### REGISTER 15-4: SSPCON1: MSSP CONTROL REGISTER1 ($I^2C$ MODE)

| R/W-0 | R/W-0 | R/W-0 | R/W-0 | R/W-0 | R/W-0 | R/W-0 | R/W-0 |
|---|---|---|---|---|---|---|---|
| WCOL | SSPOV | SSPEN | CKP | SSPM3 | SSPM2 | SSPM1 | SSPM0 |
| bit 7 | | | | | | | bit 0 |

bit 7 **WCOL:** Write Collision Detect bit

In Master Transmit mode:

1 = A write to the SSPBUF register was attempted while the $I^2C$ conditions were not valid for a transmission to be started (must be cleared in software)

0 = No collision

In Slave Transmit mode:

1 = The SSPBUF register is written while it is still transmitting the previous word (must be cleared in software)

0 = No collision

In Receive mode (Master or Slave modes):

This is a “don’t care” bit

bit 6 **SSPOV:** Receive Overflow Indicator bit

In Receive mode:

1 = A byte is received while the SSPBUF register is still holding the previous byte (must be cleared in software)

0 = No overflow

In Transmit mode:

This is a “don’t care” bit in Transmit mode

bit 5 **SSPEN:** Synchronous Serial Port Enable bit

1 = Enables the serial port and configures the SDA and SCL pins as the serial port pins

0 = Disables serial port and configures these pins as I/O port pins

**Note:** When enabled, the SDA and SCL pins must be properly configured as input or output.

bit 4 **CKP:** SCK Release Control bit

In Slave mode:

1 = Release clock

0 = Holds clock low (clock stretch), used to ensure data setup time

In Master mode:

Unused in this mode

bit 3-0 **SSPM3:SSPM0:** Synchronous Serial Port Mode Select bits

1111 = $I^2C$ Slave mode, 10-bit address with START and STOP bit interrupts enabled

1110 = $I^2C$ Slave mode, 7-bit address with START and STOP bit interrupts enabled

1011 = $I^2C$ Firmware Controlled Master mode (Slave IDLE)

1000 = $I^2C$ Master mode, clock = FOSC / (4 * (SSPADD+1))

0111 = $I^2C$ Slave mode, 10-bit address

0110 = $I^2C$ Slave mode, 7-bit address

**Note:** Bit combinations not specifically listed here are either reserved, or implemented in SPI mode only.

| Legend: | | | |
|---|---|---|---|
| R = Readable bit | W = Writable bit | U = Unimplemented bit, read as ‘0’ | |
| - n = Value at POR | ’1’ = Bit is set | ’0’ = Bit is cleared | x = Bit is unknown |


© 2006 Microchip Technology Inc.

**REGISTER 15-5: SSPCON2: MSSP CONTROL REGISTER 2 ($I^2C$ MODE)**

| R/W-0 | R/W-0 | R/W-0 | R/W-0 | R/W-0 | R/W-0 | R/W-0 | R/W-0 |
|---|---|---|---|---|---|---|---|
| GCEN | ACKSTAT | ACKDT | ACKEN | RCEN | PEN | RSEN | SEN |
| bit 7 | | | | | | | bit 0 |

bit 7 **GCEN:** General Call Enable bit (Slave mode only)
1 = Enable interrupt when a general call address (0000h) is received in the SSPSR
0 = General call address disabled

bit 6 **ACKSTAT:** Acknowledge Status bit (Master Transmit mode only)
1 = Acknowledge was not received from slave
0 = Acknowledge was received from slave

bit 5 **ACKDT:** Acknowledge Data bit (Master Receive mode only)
1 = Not Acknowledge
0 = Acknowledge

**Note:** Value that will be transmitted when the user initiates an Acknowledge sequence at the end of a receive.

bit 4 **ACKEN:** Acknowledge Sequence Enable bit (Master Receive mode only)
1 = Initiate Acknowledge sequence on SDA and SCL pins, and transmit ACKDT data bit. Automatically cleared by hardware.
0 = Acknowledge sequence IDLE

bit 3 **RCEN:** Receive Enable bit (Master mode only)
1 = Enables Receive mode for $I^2C$
0 = Receive IDLE

bit 2 **PEN:** STOP Condition Enable bit (Master mode only)
1 = Initiate STOP condition on SDA and SCL pins. Automatically cleared by hardware.
0 = STOP condition IDLE

bit 1 **RSEN:** Repeated START Condition Enabled bit (Master mode only)
1 = Initiate Repeated START condition on SDA and SCL pins. Automatically cleared by hardware.
0 = Repeated START condition IDLE

bit 0 **SEN:** START Condition Enabled/Stretch Enabled bit
In Master mode:
1 = Initiate START condition on SDA and SCL pins. Automatically cleared by hardware.
0 = START condition IDLE
In Slave mode:
1 = Clock stretching is enabled for both Slave Transmit and Slave Receive (stretch enabled)
0 = Clock stretching is enabled for slave transmit only (Legacy mode)

**Note:** For bits ACKEN, RCEN, PEN, RSEN, SEN: If the $I^2C$ module is not in the IDLE mode, this bit may not be set (no spooling) and the SSPBUF may not be written (or writes to the SSPBUF are disabled).

| Legend: | | | |
|---|---|---|---|
| R = Readable bit | W = Writable bit | U = Unimplemented bit, read as ‘0’ | |
| - n = Value at POR | ’1’ = Bit is set | ’0’ = Bit is cleared | x = Bit is unknown |

### 15.4.2 OPERATION

The MSSP module functions are enabled by setting MSSP Enable bit, SSPEN (SSPCON<5>).

The SSPCON1 register allows control of the $I^2C$ operation. Four mode selection bits (SSPCON<3:0>) allow one of the following $I^2C$ modes to be selected:

- $I^2C$ Master mode, clock = OSC/4 (SSPADD +1)
- $I^2C$ Slave mode (7-bit address)
- $I^2C$ Slave mode (10-bit address)
- $I^2C$ Slave mode (7-bit address), with START and STOP bit interrupts enabled
- $I^2C$ Slave mode (10-bit address), with START and STOP bit interrupts enabled
- $I^2C$ Firmware controlled master operation, slave is IDLE

Selection of any $I^2C$ mode, with the SSPEN bit set, forces the SCL and SDA pins to be open drain, provided these pins are programmed to inputs by setting the appropriate TRISC bits. To guarantee proper operation of the module, pull-up resistors must be provided externally to the SCL and SDA pins.

### 15.4.3 SLAVE MODE

In Slave mode, the SCL and SDA pins must be configured as inputs (TRISC<4:3> set). The MSSP module will override the input state with the output data when required (slave-transmitter).

The $I^2C$ Slave mode hardware will always generate an interrupt on an address match. Through the mode select bits, the user can also choose to interrupt on START and STOP bits

When an address is matched or the data transfer after an address match is received, the hardware automatically will generate the Acknowledge ($\overline{ACK}$) pulse and load the SSPBUF register with the received value currently in the SSPSR register.

Any combination of the following conditions will cause the MSSP module not to give this $\overline{ACK}$ pulse:

- The buffer full bit BF (SSPSTAT<0>) was set before the transfer was received.
- The overflow bit SSPOV (SSPCON<6>) was set before the transfer was received.

In this case, the SSPSR register value is not loaded into the SSPBUF, but bit SSPIF (PIR1<3>) is set. The BF bit is cleared by reading the SSPBUF register, while bit SSPOV is cleared through software.

The SCL clock input must have a minimum high and low for proper operation. The high and low times of the $I^2C$ specification, as well as the requirement of the MSSP module, are shown in timing parameter 100 and parameter 101.

#### 15.4.3.1 Addressing

Once the MSSP module has been enabled, it waits for a START condition to occur. Following the START condition, the 8-bits are shifted into the SSPSR register. All incoming bits are sampled with the rising edge of the clock (SCL) line. The value of register SSPSR<7:1> is compared to the value of the SSPADD register. The address is compared on the falling edge of the eighth clock (SCL) pulse. If the addresses match, and the BF and SSPOV bits are clear, the following events occur:

1. The SSPSR register value is loaded into the SSPBUF register.
2. The buffer full bit BF is set.
3. An $\overline{ACK}$ pulse is generated.
4. MSSP interrupt flag bit, SSPIF (PIR1<3>) is set (interrupt is generated if enabled) on the falling edge of the ninth SCL pulse.

In 10-bit Address mode, two address bytes need to be received by the slave. The five Most Significant bits (MSbs) of the first address byte specify if this is a 10-bit address. Bit R/$\overline{W}$ (SSPSTAT<2>) must specify a write so the slave device will receive the second address byte. For a 10-bit address, the first byte would equal '`11110 A9 A8 0`', where '`A9`' and '`A8`' are the two MSbs of the address. The sequence of events for 10-bit address is as follows, with steps 7 through 9 for the slave-transmitter:

1. Receive first (high) byte of Address (bits SSPIF, BF and bit UA (SSPSTAT<1>) are set).
2. Update the SSPADD register with second (low) byte of Address (clears bit UA and releases the SCL line).
3. Read the SSPBUF register (clears bit BF) and clear flag bit SSPIF.
4. Receive second (low) byte of Address (bits SSPIF, BF, and UA are set).
5. Update the SSPADD register with the first (high) byte of Address. If match releases SCL line, this will clear bit UA.
6. Read the SSPBUF register (clears bit BF) and clear flag bit SSPIF.
7. Receive Repeated START condition.
8. Receive first (high) byte of Address (bits SSPIF and BF are set).
9. Read the SSPBUF register (clears bit BF) and clear flag bit SSPIF.


© 2006 Microchip Technology Inc.

#### 15.4.3.2 Reception

When the R/$\overline{W}$ bit of the address byte is clear and an address match occurs, the R/$\overline{W}$ bit of the SSPSTAT register is cleared. The received address is loaded into the SSPBUF register and the SDA line is held low ($\overline{ACK}$).

When the address byte overflow condition exists, then the no Acknowledge ($\overline{ACK}$) pulse is given. An overflow condition is defined as either bit BF (SSPSTAT<0>) is set, or bit SSPOV (SSPCON1<6>) is set.

An MSSP interrupt is generated for each data transfer byte. Flag bit SSPIF (PIR1<3>) must be cleared in software. The SSPSTAT register is used to determine the status of the byte.

If SEN is enabled (SSPCON1<0>=1), RC3/SCK/SCL will be held low (clock stretch) following each data transfer. The clock must be released by setting bit CKP (SSPCON<4>). See Section 15.4.4 (“Clock Stretching”), for more detail.

#### 15.4.3.3 Transmission

When the R/$\overline{W}$ bit of the incoming address byte is set and an address match occurs, the R/$\overline{W}$ bit of the SSPSTAT register is set. The received address is loaded into the SSPBUF register. The $\overline{ACK}$ pulse will be sent on the ninth bit and pin RC3/SCK/SCL is held low, regardless of SEN (see “Clock Stretching”, Section 15.4.4, for more detail). By stretching the clock, the master will be unable to assert another clock pulse until the slave is done preparing the transmit data.The transmit data must be loaded into the SSPBUF register, which also loads the SSPSR register. Then pin RC3/SCK/SCL should be enabled by setting bit CKP (SSPCON1<4>). The eight data bits are shifted out on the falling edge of the SCL input. This ensures that the SDA signal is valid during the SCL high time (Figure 15-9).

The $\overline{ACK}$ pulse from the master-receiver is latched on the rising edge of the ninth SCL input pulse. If the SDA line is high (not $\overline{ACK}$), then the data transfer is complete. In this case, when the $\overline{ACK}$ is latched by the slave, the slave logic is reset (resets SSPSTAT register) and the slave monitors for another occurrence of the START bit. If the SDA line was low ($\overline{ACK}$), the next transmit data must be loaded into the SSPBUF register. Again, pin RC3/SCK/SCL must be enabled by setting bit CKP.

An MSSP interrupt is generated for each data transfer byte. The SSPIF bit must be cleared in software and the SSPSTAT register is used to determine the status of the byte. The SSPIF bit is set on the falling edge of the ninth clock pulse.

**FIGURE 15-8: I²C SLAVE MODE TIMING WITH SEN = 0 (RECEPTION, 7-BIT ADDRESS)**

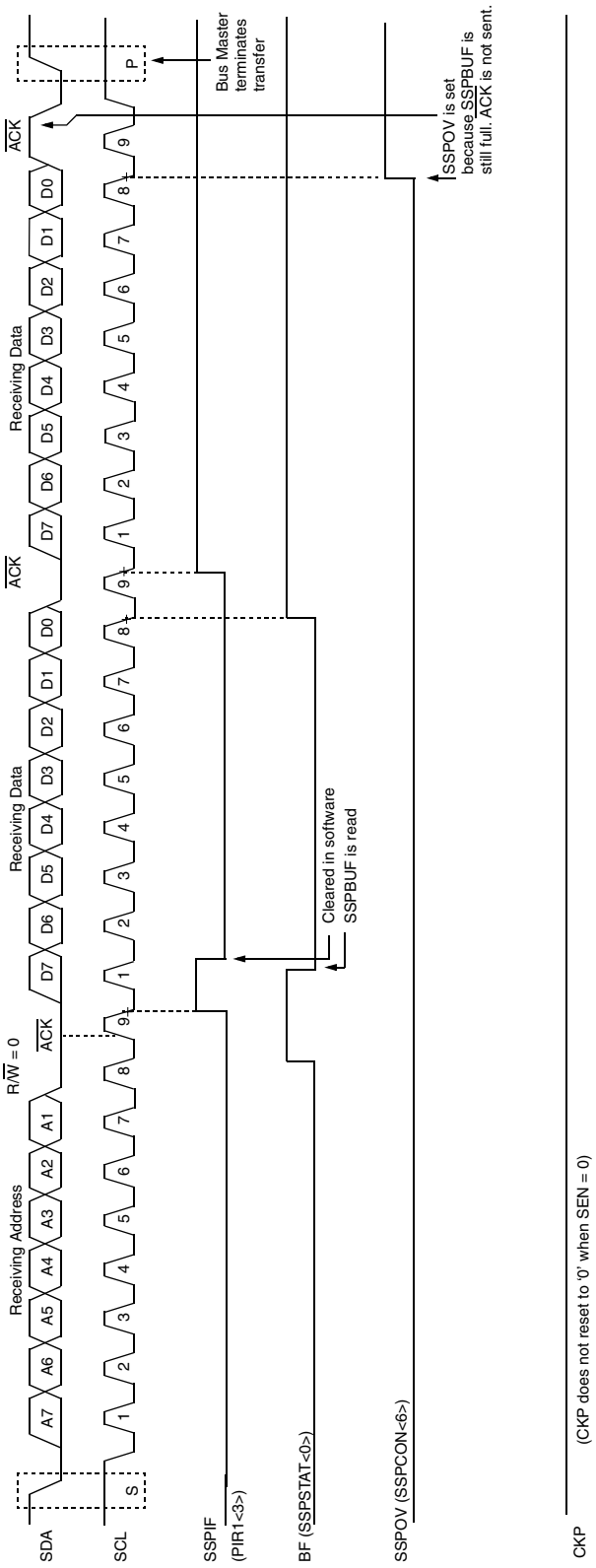



© 2006 Microchip Technology Inc.

**FIGURE 15-9: I²C SLAVE MODE TIMING (TRANSMISSION, 7-BIT ADDRESS)**

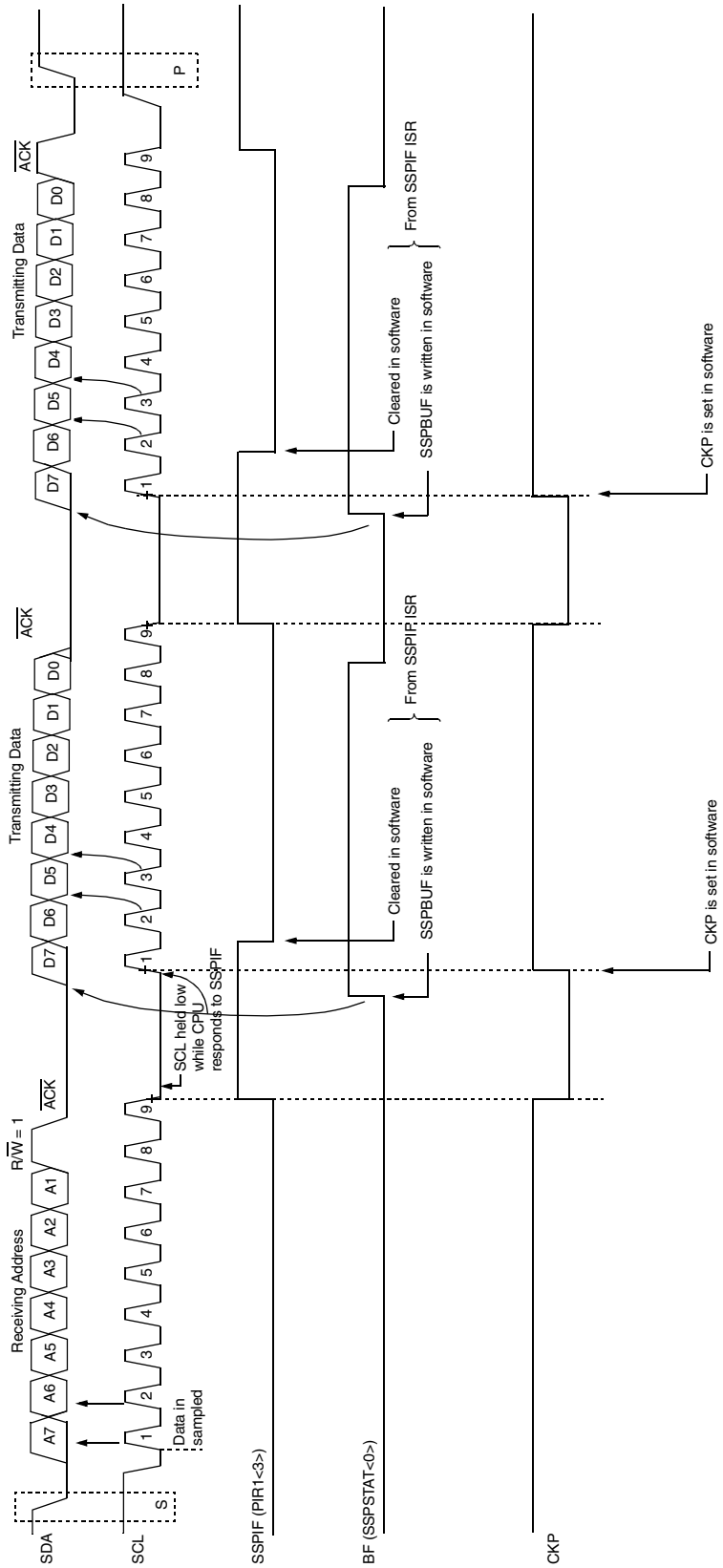

**FIGURE 15-10: I²C SLAVE MODE TIMING WITH SEN = 0 (RECEPTION, 10-BIT ADDRESS)**

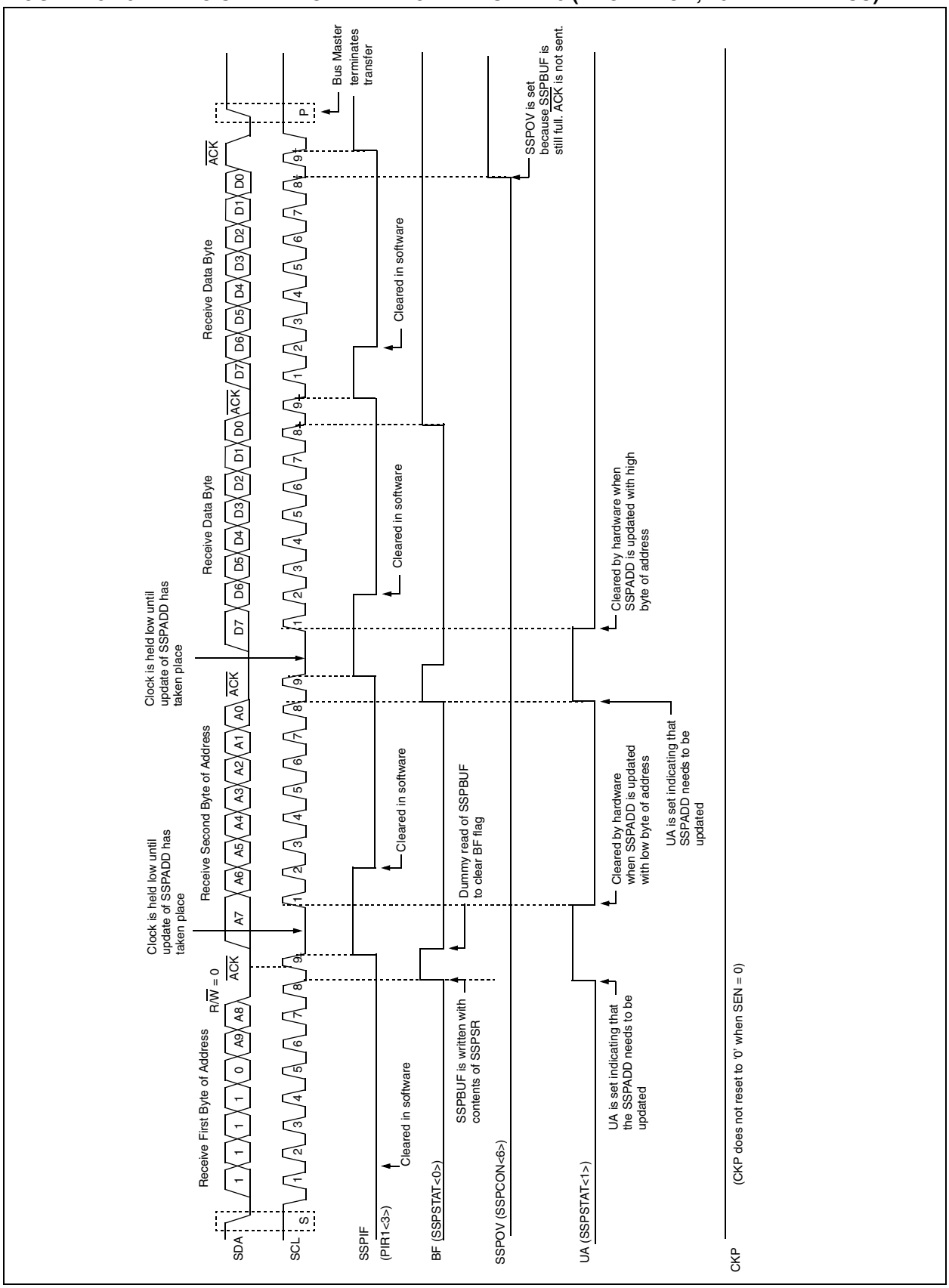



© 2006 Microchip Technology Inc.

**FIGURE 15-11: I²C SLAVE MODE TIMING (TRANSMISSION, 10-BIT ADDRESS)**

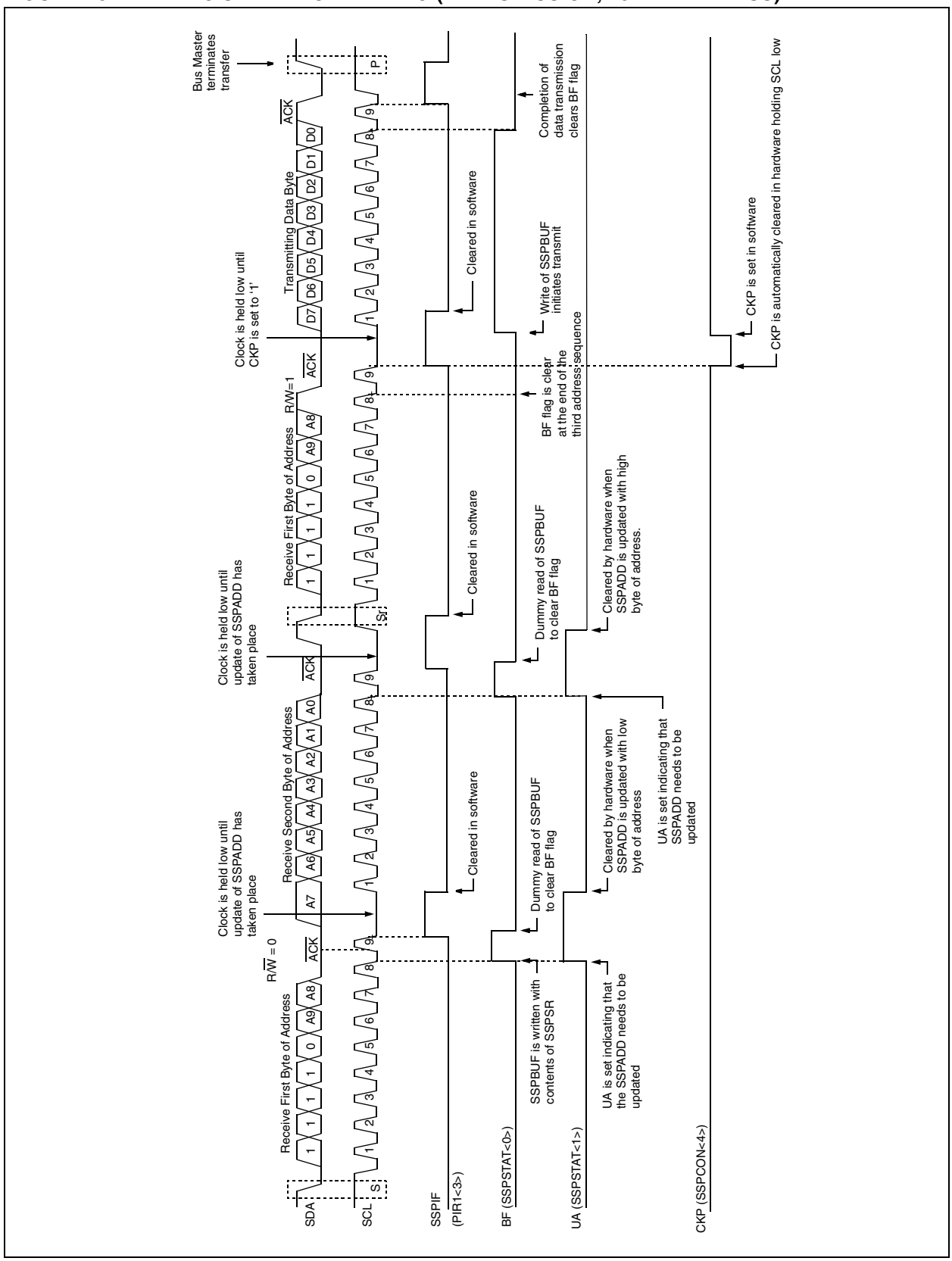

### 15.4.4 CLOCK STRETCHING

Both 7- and 10-bit Slave modes implement automatic clock stretching during a transmit sequence.

The SEN bit (SSPCON2<0>) allows clock stretching to be enabled during receives. Setting SEN will cause the SCL pin to be held low at the end of each data receive sequence.

#### 15.4.4.1 Clock Stretching for 7-bit Slave Receive Mode (SEN = 1)

In 7-bit Slave Receive mode, on the falling edge of the ninth clock at the end of the $\overline{\text{ACK}}$ sequence, if the BF bit is set, the CKP bit in the SSPCON1 register is automatically cleared, forcing the SCL output to be held low. The CKP being cleared to '0' will assert the SCL line low. The CKP bit must be set in the user's ISR before reception is allowed to continue. By holding the SCL line low, the user has time to service the ISR and read the contents of the SSPBUF before the master device can initiate another receive sequence. This will prevent buffer overruns from occurring (see Figure 15-13).

**Note 1:** If the user reads the contents of the SSPBUF before the falling edge of the ninth clock, thus clearing the BF bit, the CKP bit will not be cleared and clock stretching will not occur.

**2:** The CKP bit can be set in software, regardless of the state of the BF bit. The user should be careful to clear the BF bit in the ISR before the next receive sequence, in order to prevent an overflow condition.

#### 15.4.4.2 Clock Stretching for 10-bit Slave Receive Mode (SEN = 1)

In 10-bit Slave Receive mode, during the address sequence, clock stretching automatically takes place but CKP is not cleared. During this time, if the UA bit is set after the ninth clock, clock stretching is initiated. The UA bit is set after receiving the upper byte of the 10-bit address, and following the receive of the second byte of the 10-bit address with the R/$\overline{\text{W}}$ bit cleared to '0'. The release of the clock line occurs upon updating SSPADD. Clock stretching will occur on each data receive sequence as described in 7-bit mode.

**Note:** If the user polls the UA bit and clears it by updating the SSPADD register before the falling edge of the ninth clock occurs, and if the user hasn't cleared the BF bit by reading the SSPBUF register before that time, then the CKP bit will still NOT be asserted low. Clock stretching on the basis of the state of the BF bit only occurs during a data sequence, not an address sequence.

#### 15.4.4.3 Clock Stretching for 7-bit Slave Transmit Mode

7-bit Slave Transmit mode implements clock stretching by clearing the CKP bit after the falling edge of the ninth clock, if the BF bit is clear. This occurs, regardless of the state of the SEN bit.

The user's ISR must set the CKP bit before transmission is allowed to continue. By holding the SCL line low, the user has time to service the ISR and load the contents of the SSPBUF before the master device can initiate another transmit sequence (see Figure 15-9).

**Note 1:** If the user loads the contents of SSPBUF, setting the BF bit before the falling edge of the ninth clock, the CKP bit will not be cleared and clock stretching will not occur.

**2:** The CKP bit can be set in software, regardless of the state of the BF bit.

#### 15.4.4.4 Clock Stretching for 10-bit Slave Transmit Mode

In 10-bit Slave Transmit mode, clock stretching is controlled during the first two address sequences by the state of the UA bit, just as it is in 10-bit Slave Receive mode. The first two addresses are followed by a third address sequence, which contains the high order bits of the 10-bit address and the R/$\overline{\text{W}}$ bit set to '1'. After the third address sequence is performed, the UA bit is not set, the module is now configured in Transmit mode, and clock stretching is controlled by the BF flag, as in 7-bit Slave Transmit mode (see Figure 15-11).


© 2006 Microchip Technology Inc.

#### 15.4.4.5 Clock Synchronization and the CKP bit

If a user clears the CKP bit, the SCL output is forced to '0'. Setting the CKP bit will not assert the SCL output low until the SCL output is already sampled low. If the user attempts to drive SCL low, the CKP bit will not assert the SCL line until an external $I^2C$ master device has already asserted the SCL line. The SCL output will remain low until the CKP bit is set, and all other devices on the $I^2C$ bus have de-asserted SCL. This ensures that a write to the CKP bit will not violate the minimum high time requirement for SCL (see Figure 15-12).

**FIGURE 15-12: CLOCK SYNCHRONIZATION TIMING**

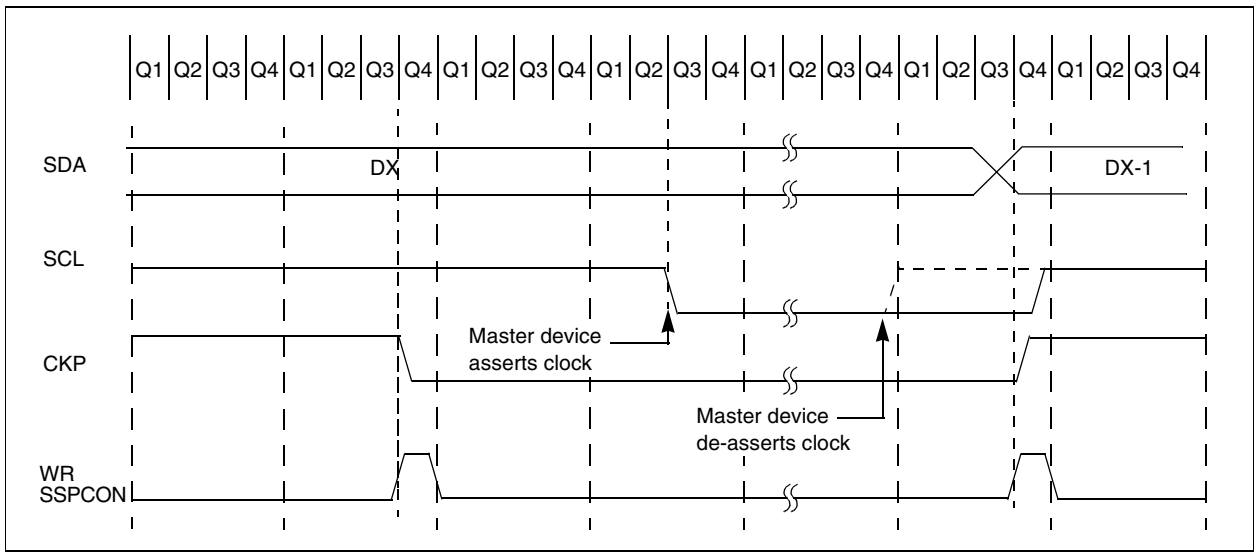

**FIGURE 15-13: I²C SLAVE MODE TIMING WITH SEN = 1 (RECEPTION, 7-BIT ADDRESS)**

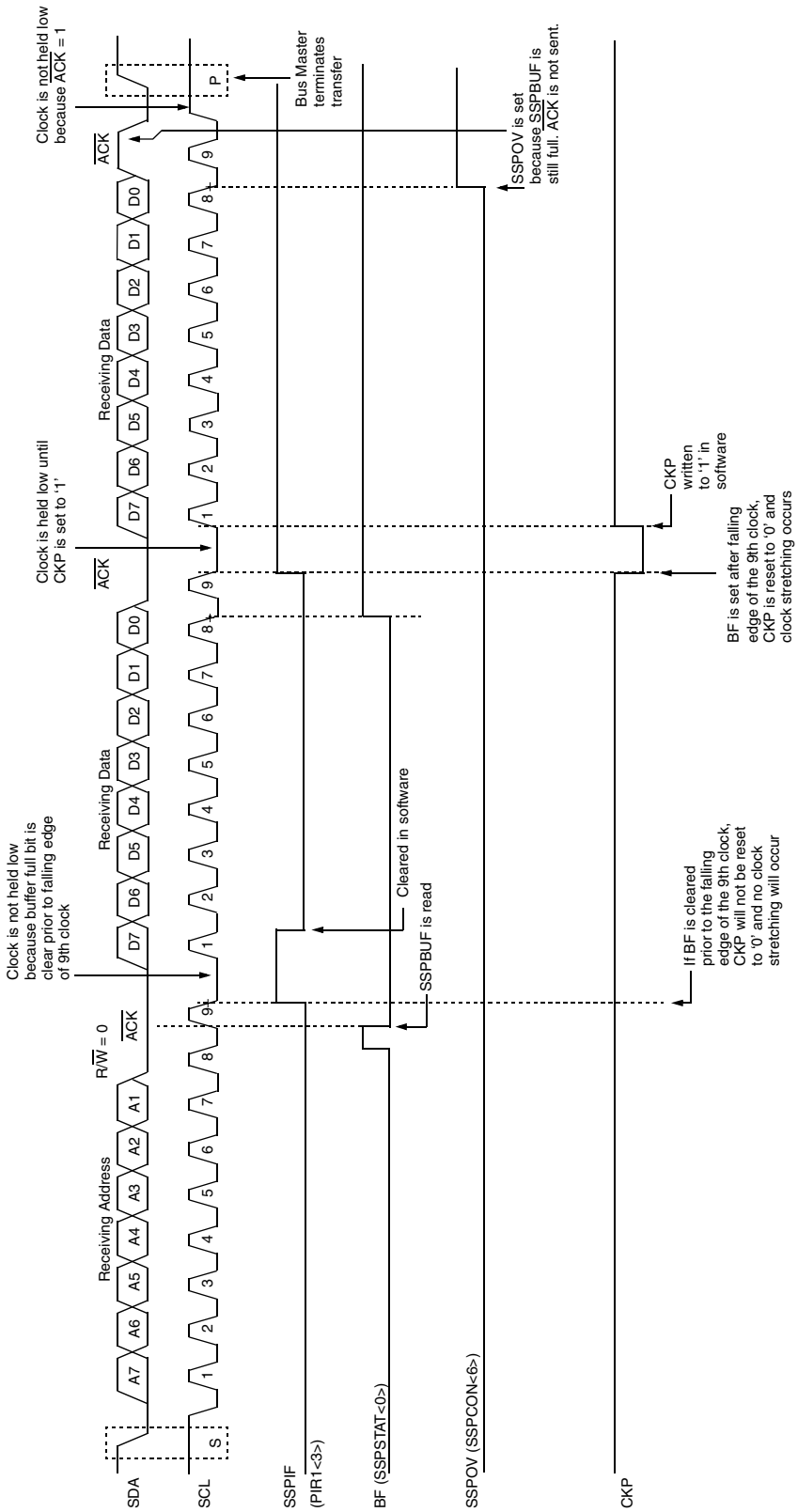



© 2006 Microchip Technology Inc.

**FIGURE 15-14: I²C SLAVE MODE TIMING SEN = 1 (RECEPTION, 10-BIT ADDRESS)**

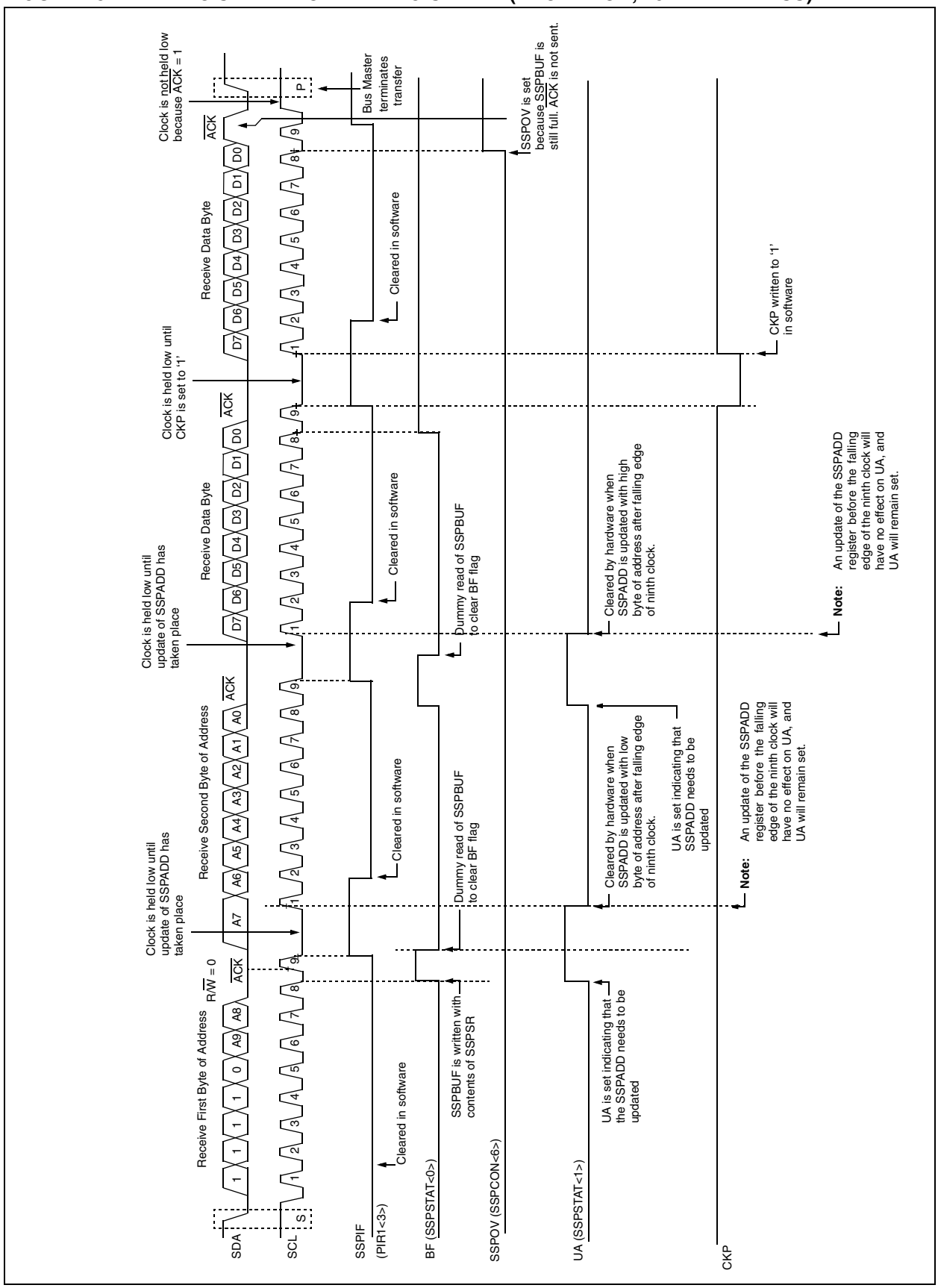

### 15.4.5 GENERAL CALL ADDRESS SUPPORT

The addressing procedure for the I²C bus is such that the first byte after the START condition usually determines which device will be the slave addressed by the master. The exception is the general call address, which can address all devices. When this address is used, all devices should, in theory, respond with an Acknowledge.

The general call address is one of eight addresses reserved for specific purposes by the I²C protocol. It consists of all 0's with R/$\overline{W}$ = 0.

The general call address is recognized when the General Call Enable bit (GCEN) is enabled (SSPCON2<7> set). Following a START bit detect, 8-bits are shifted into the SSPSR and the address is compared against the SSPADD. It is also compared to the general call address and fixed in hardware.

If the general call address matches, the SSPSR is transferred to the SSPBUF, the BF flag bit is set (eighth bit), and on the falling edge of the ninth bit ($\overline{ACK}$ bit), the SSPIF interrupt flag bit is set.

When the interrupt is serviced, the source for the interrupt can be checked by reading the contents of the SSPBUF. The value can be used to determine if the address was device specific or a general call address.

In 10-bit mode, the SSPADD is required to be updated for the second half of the address to match, and the UA bit is set (SSPSTAT<1>). If the general call address is sampled when the GCEN bit is set, while the slave is configured in 10-bit Address mode, then the second half of the address is not necessary, the UA bit will not be set, and the slave will begin receiving data after the Acknowledge (Figure 15-15).

**FIGURE 15-15: SLAVE MODE GENERAL CALL ADDRESS SEQUENCE (7 OR 10-BIT ADDRESS MODE)**

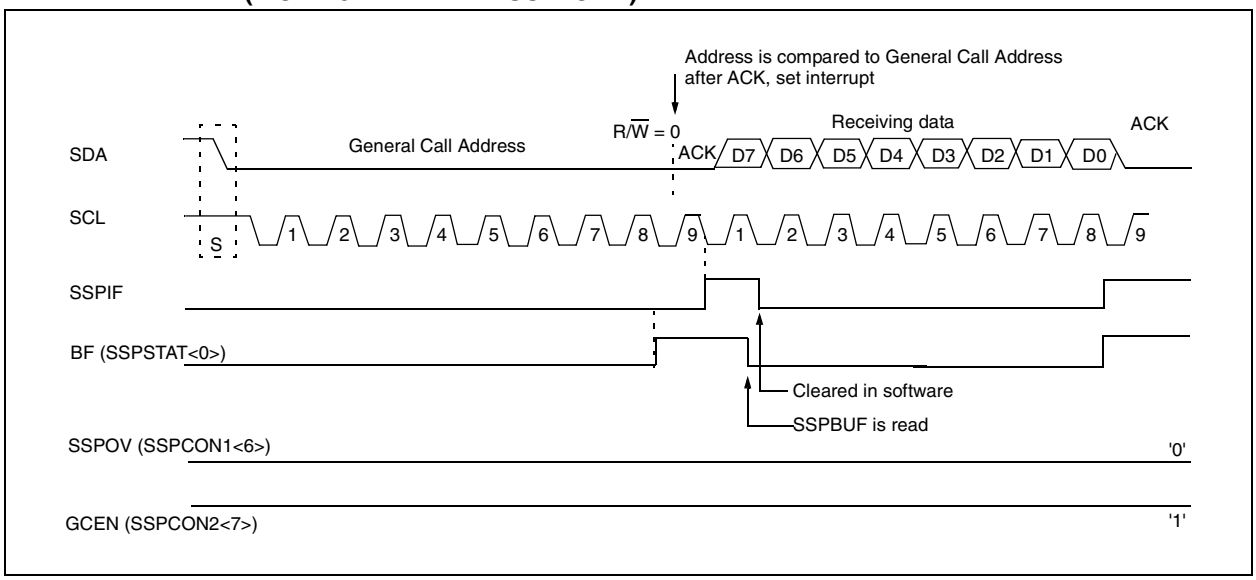



© 2006 Microchip Technology Inc.

### 15.4.6 MASTER MODE

Master mode is enabled by setting and clearing the appropriate SSPM bits in SSPCON1 and by setting the SSPEN bit. In Master mode, the SCL and SDA lines are manipulated by the MSSP hardware.

Master mode of operation is supported by interrupt generation on the detection of the START and STOP conditions. The STOP (P) and START (S) bits are cleared from a RESET or when the MSSP module is disabled. Control of the I$^2$C bus may be taken when the P bit is set or the bus is IDLE, with both the S and P bits clear.

In Firmware Controlled Master mode, user code conducts all I$^2$C bus operations based on START and STOP bit conditions.

Once Master mode is enabled, the user has six options.

1. Assert a START condition on SDA and SCL.
2. Assert a Repeated START condition on SDA and SCL.
3. Write to the SSPBUF register initiating transmission of data/address.
4. Configure the I$^2$C port to receive data.
5. Generate an Acknowledge condition at the end of a received byte of data.
6. Generate a STOP condition on SDA and SCL.

**Note:** The MSSP Module, when configured in I$^2$C Master mode, does not allow queueing of events. For instance, the user is not allowed to initiate a START condition and immediately write the SSPBUF register to initiate transmission before the START condition is complete. In this case, the SSPBUF will not be written to and the WCOL bit will be set, indicating that a write to the SSPBUF did not occur.

The following events will cause SSP interrupt flag bit, SSPIF, to be set (SSP interrupt if enabled):

- START condition
- STOP condition
- Data transfer byte transmitted/received
- Acknowledge Transmit
- Repeated START

**FIGURE 15-16: MSSP BLOCK DIAGRAM (I$^2$C MASTER MODE)**

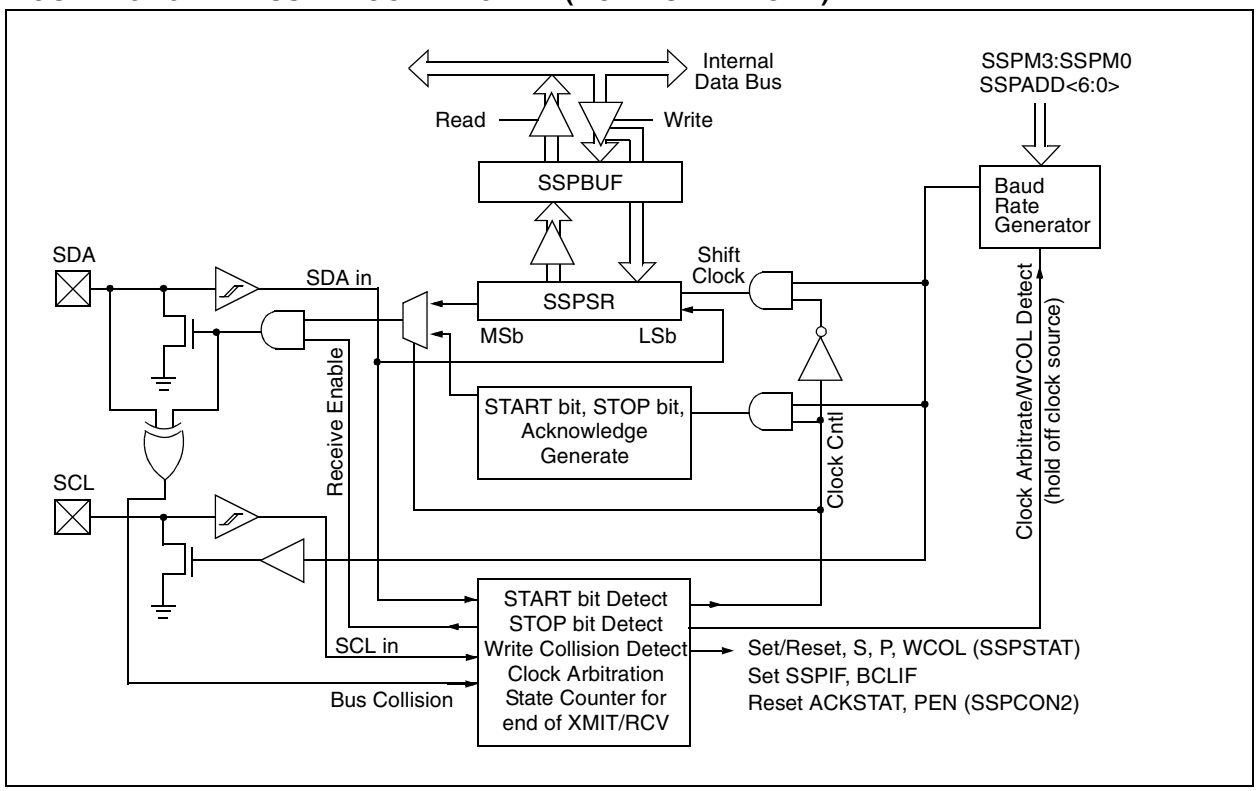

#### 15.4.6.1 I²C Master Mode Operation

The master device generates all of the serial clock pulses and the START and STOP conditions. A transfer is ended with a STOP condition or with a Repeated START condition. Since the Repeated START condition is also the beginning of the next serial transfer, the I²C bus will not be released.

In Master Transmitter mode, serial data is output through SDA, while SCL outputs the serial clock. The first byte transmitted contains the slave address of the receiving device (7 bits) and the Read/Write (R/$\overline{W}$) bit. In this case, the R/$\overline{W}$ bit will be logic '0'. Serial data is transmitted 8 bits at a time. After each byte is transmitted, an Acknowledge bit is received. START and STOP conditions are output to indicate the beginning and the end of a serial transfer.

In Master Receive mode, the first byte transmitted contains the slave address of the transmitting device (7 bits) and the R/$\overline{W}$ bit. In this case, the R/$\overline{W}$ bit will be logic '1'. Thus, the first byte transmitted is a 7-bit slave address followed by a '1' to indicate receive bit. Serial data is received via SDA, while SCL outputs the serial clock. Serial data is received 8 bits at a time. After each byte is received, an Acknowledge bit is transmitted. START and STOP conditions indicate the beginning and end of transmission.

The baud rate generator used for the SPI mode operation is used to set the SCL clock frequency for either 100 kHz, 400 kHz or 1 MHz I²C operation. See Section 15.4.7 (“Baud Rate Generator”), for more detail.

A typical transmit sequence would go as follows:

1. The user generates a START condition by setting the START enable bit, SEN (SSPCON2<0>).
2. SSPIF is set. The MSSP module will wait the required start time before any other operation takes place.
3. The user loads the SSPBUF with the slave address to transmit.
4. Address is shifted out the SDA pin until all 8 bits are transmitted.
5. The MSSP Module shifts in the ACK bit from the slave device and writes its value into the SSPCON2 register (SSPCON2<6>).
6. The MSSP module generates an interrupt at the end of the ninth clock cycle by setting the SSPIF bit.
7. The user loads the SSPBUF with eight bits of data.
8. Data is shifted out the SDA pin until all 8 bits are transmitted.
9. The MSSP Module shifts in the ACK bit from the slave device and writes its value into the SSPCON2 register (SSPCON2<6>).
10. The MSSP module generates an interrupt at the end of the ninth clock cycle by setting the SSPIF bit.
11. The user generates a STOP condition by setting the STOP enable bit PEN (SSPCON2<2>).
12. Interrupt is generated once the STOP condition is complete.


© 2006 Microchip Technology Inc.

### 15.4.7 BAUD RATE GENERATOR

In I$^2$C Master mode, the baud rate generator (BRG) reload value is placed in the lower 7 bits of the SSPADD register (Figure 15-17). When a write occurs to SSPBUF, the baud rate generator will automatically begin counting. The BRG counts down to 0 and stops until another reload has taken place. The BRG count is decremented twice per instruction cycle (TCY) on the Q2 and Q4 clocks. In I$^2$C Master mode, the BRG is reloaded automatically.

Once the given operation is complete (i.e., transmission of the last data bit is followed by $\overline{\text{ACK}}$), the internal clock will automatically stop counting and the SCL pin will remain in its last state.

Table 15-3 demonstrates clock rates based on instruction cycles and the BRG value loaded into SSPADD.

**FIGURE 15-17: BAUD RATE GENERATOR BLOCK DIAGRAM**

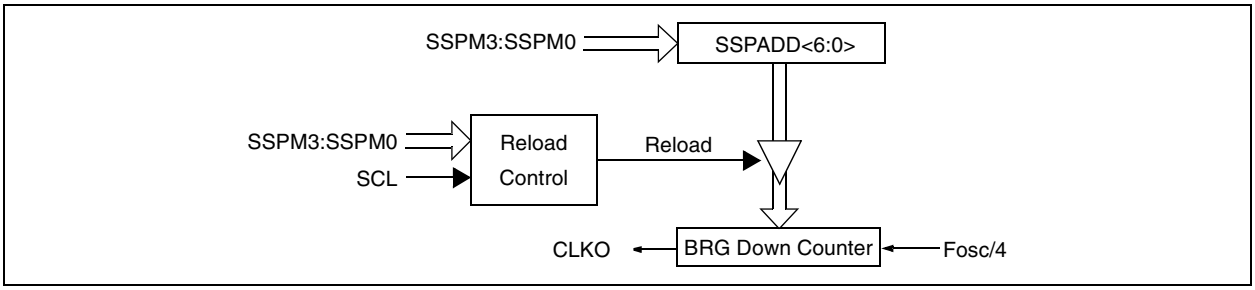


**TABLE 15-3: I$^2$C CLOCK RATE W/BRG**

| FCY | FCY*2 | BRG Value | FSCL(2) (2 Rollovers of BRG) |
|---|---|---|---|
| 10 MHz | 20 MHz | 19h | 400 kHz(1) |
| 10 MHz | 20 MHz | 20h | 312.5 kHz |
| 10 MHz | 20 MHz | 3Fh | 100 kHz |
| 4 MHz | 8 MHz | 0Ah | 400 kHz(1) |
| 4 MHz | 8 MHz | 0Dh | 308 kHz |
| 4 MHz | 8 MHz | 28h | 100 kHz |
| 1 MHz | 2 MHz | 03h | 333 kHz(1) |
| 1 MHz | 2 MHz | 0Ah | 100kHz |
| 1 MHz | 2 MHz | 00h | 1 MHz(1) |

**Note 1:** The I$^2$C interface does not conform to the 400 kHz I$^2$C specification (which applies to rates greater than 100 kHz) in all details, but may be used with care where higher rates are required by the application.

**2:** Actual frequency will depend on bus conditions. Theoretically, bus conditions will add rise time and extend low time of clock period, producing the effective frequency.

#### 15.4.7.1 Clock Arbitration

Clock arbitration occurs when the master, during any receive, transmit or Repeated START/STOP condition, de-asserts the SCL pin (SCL allowed to float high). When the SCL pin is allowed to float high, the baud rate generator (BRG) is suspended from counting until the SCL pin is actually sampled high. When the SCL pin is sampled high, the baud rate generator is reloaded with the contents of SSPADD<6:0> and begins counting. This ensures that the SCL high time will always be at least one BRG rollover count, in the event that the clock is held low by an external device (Figure 15-18).

**FIGURE 15-18: BAUD RATE GENERATOR TIMING WITH CLOCK ARBITRATION**

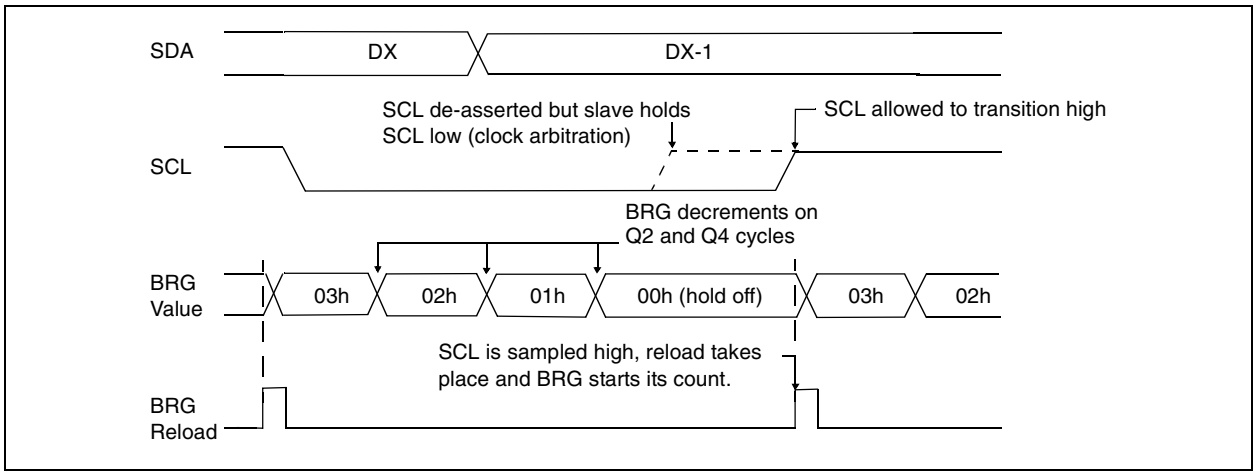



© 2006 Microchip Technology Inc.

### 15.4.8 I²C MASTER MODE START CONDITION TIMING

To initiate a START condition, the user sets the START condition enable bit, SEN (SSPCON2<0>). If the SDA and SCL pins are sampled high, the baud rate generator is reloaded with the contents of SSPADD<6:0> and starts its count. If SCL and SDA are both sampled high when the baud rate generator times out (TBRG), the SDA pin is driven low. The action of the SDA being driven low, while SCL is high, is the START condition and causes the S bit (SSPSTAT<3>) to be set. Following this, the baud rate generator is reloaded with the contents of SSPADD<6:0> and resumes its count. When the baud rate generator times out (TBRG), the SEN bit (SSPCON2<0>) will be automatically cleared by hardware, the baud rate generator is suspended, leaving the SDA line held low and the START condition is complete.

**Note:** If at the beginning of the START condition, the SDA and SCL pins are already sampled low, or if during the START condition the SCL line is sampled low before the SDA line is driven low, a bus collision occurs, the Bus Collision Interrupt Flag, BCLIF is set, the START condition is aborted, and the I²C module is reset into its IDLE state.

#### 15.4.8.1 WCOL Status Flag

If the user writes the SSPBUF when a START sequence is in progress, the WCOL is set and the contents of the buffer are unchanged (the write doesn't occur).

**Note:** Because queueing of events is not allowed, writing to the lower 5 bits of SSPCON2 is disabled until the START condition is complete.

**FIGURE 15-19: FIRST START BIT TIMING**

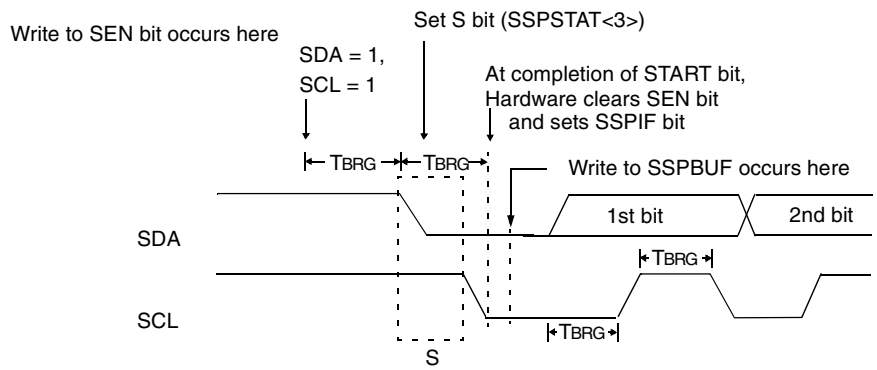

### 15.4.9 I²C MASTER MODE REPEATED START CONDITION TIMING

A Repeated START condition occurs when the RSEN bit (SSPCON2<1>) is programmed high and the I²C logic module is in the IDLE state. When the RSEN bit is set, the SCL pin is asserted low. When the SCL pin is sampled low, the baud rate generator is loaded with the contents of SSPADD<5:0> and begins counting. The SDA pin is released (brought high) for one baud rate generator count (TBRG). When the baud rate generator times out, if SDA is sampled high, the SCL pin will be de-asserted (brought high). When SCL is sampled high, the baud rate generator is reloaded with the contents of SSPADD<6:0> and begins counting. SDA and SCL must be sampled high for one TBRG. This action is then followed by assertion of the SDA pin (SDA = 0) for one TBRG, while SCL is high. Following this, the RSEN bit (SSPCON2<1>) will be automatically cleared and the baud rate generator will not be reloaded, leaving the SDA pin held low. As soon as a START condition is detected on the SDA and SCL pins, the S bit (SSPSTAT<3>) will be set. The SSPIF bit will not be set until the baud rate generator has timed out.

> **Note 1:** If RSEN is programmed while any other event is in progress, it will not take effect.
>
> **2:** A bus collision during the Repeated START condition occurs if:
>
> - SDA is sampled low when SCL goes from low to high.
> - SCL goes low before SDA is asserted low. This may indicate that another master is attempting to transmit a data "1".

Immediately following the SSPIF bit getting set, the user may write the SSPBUF with the 7-bit address in 7-bit mode, or the default first address in 10-bit mode. After the first eight bits are transmitted and an ACK is received, the user may then transmit an additional eight bits of address (10-bit mode) or eight bits of data (7-bit mode).

#### 15.4.9.1 WCOL Status Flag

If the user writes the SSPBUF when a Repeated START sequence is in progress, the WCOL is set and the contents of the buffer are unchanged (the write doesn't occur).

> **Note:** Because queueing of events is not allowed, writing of the lower 5 bits of SSPCON2 is disabled until the Repeated START condition is complete.

**FIGURE 15-20: REPEAT START CONDITION WAVEFORM**

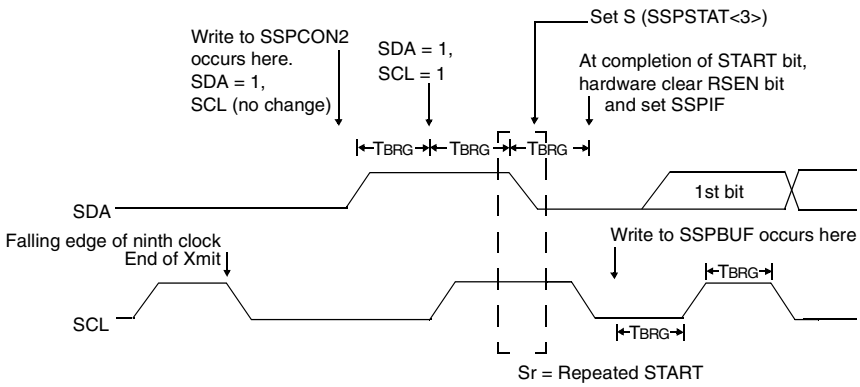



© 2006 Microchip Technology Inc.

### 15.4.10 I²C MASTER MODE TRANSMISSION

Transmission of a data byte, a 7-bit address, or the other half of a 10-bit address is accomplished by simply writing a value to the SSPBUF register. This action will set the buffer full flag bit, BF, and allow the baud rate generator to begin counting and start the next transmission. Each bit of address/data will be shifted out onto the SDA pin after the falling edge of SCL is asserted (see data hold time specification parameter 106). SCL is held low for one baud rate generator rollover count (TBRG). Data should be valid before SCL is released high (see data setup time specification parameter 107). When the SCL pin is released high, it is held that way for TBRG. The data on the SDA pin must remain stable for that duration and some hold time after the next falling edge of SCL. After the eighth bit is shifted out (the falling edge of the eighth clock), the BF flag is cleared and the master releases SDA. This allows the slave device being addressed to respond with an $\overline{ACK}$ bit during the ninth bit time if an address match occurred or if data was received properly. The status of $\overline{ACK}$ is written into the ACKDT bit on the falling edge of the ninth clock. If the master receives an Acknowledge, the Acknowledge status bit, ACKSTAT, is cleared. If not, the bit is set. After the ninth clock, the SSPIF bit is set and the master clock (baud rate generator) is suspended until the next data byte is loaded into the SSPBUF, leaving SCL low and SDA unchanged (Figure 15-21).

After the write to the SSPBUF, each bit of address will be shifted out on the falling edge of SCL until all seven address bits and the R/$\overline{W}$ bit are completed. On the falling edge of the eighth clock, the master will de-assert the SDA pin, allowing the slave to respond with an Acknowledge. On the falling edge of the ninth clock, the master will sample the SDA pin to see if the address was recognized by a slave. The status of the ACK bit is loaded into the ACKSTAT status bit (SSPCON2<6>). Following the falling edge of the ninth clock transmission of the address, the SSPIF is set, the BF flag is cleared and the baud rate generator is turned off until another write to the SSPBUF takes place, holding SCL low and allowing SDA to float.

#### 15.4.10.1 BF Status Flag

In Transmit mode, the BF bit (SSPSTAT<0>) is set when the CPU writes to SSPBUF and is cleared when all 8 bits are shifted out.

#### 15.4.10.2 WCOL Status Flag

If the user writes the SSPBUF when a transmit is already in progress (i.e., SSPSR is still shifting out a data byte), the WCOL is set and the contents of the buffer are unchanged (the write doesn't occur).

WCOL must be cleared in software.

#### 15.4.10.3 ACKSTAT Status Flag

In Transmit mode, the ACKSTAT bit (SSPCON2<6>) is cleared when the slave has sent an Acknowledge ($\overline{ACK}$ = 0), and is set when the slave does not Acknowledge ($\overline{ACK}$ = 1). A slave sends an Acknowledge when it has recognized its address (including a general call) or when the slave has properly received its data.

### 15.4.11 I²C MASTER MODE RECEPTION

Master mode reception is enabled by programming the receive enable bit, RCEN (SSPCON2<3>).

> **Note:** In the MSSP module, the RCEN bit must be set after the ACK sequence or the RCEN bit will be disregarded.

The baud rate generator begins counting, and on each rollover, the state of the SCL pin changes (high to low/low to high) and data is shifted into the SSPSR. After the falling edge of the eighth clock, the receive enable flag is automatically cleared, the contents of the SSPSR are loaded into the SSPBUF, the BF flag bit is set, the SSPIF flag bit is set and the baud rate generator is suspended from counting, holding SCL low. The MSSP is now in IDLE state, awaiting the next command. When the buffer is read by the CPU, the BF flag bit is automatically cleared. The user can then send an Acknowledge bit at the end of reception, by setting the Acknowledge sequence enable bit, ACKEN (SSPCON2<4>).

#### 15.4.11.1 BF Status Flag

In receive operation, the BF bit is set when an address or data byte is loaded into SSPBUF from SSPSR. It is cleared when the SSPBUF register is read.

#### 15.4.11.2 SSPOV Status Flag

In receive operation, the SSPOV bit is set when 8 bits are received into the SSPSR and the BF flag bit is already set from a previous reception.

#### 15.4.11.3 WCOL Status Flag

If the user writes the SSPBUF when a receive is already in progress (i.e., SSPSR is still shifting in a data byte), the WCOL bit is set and the contents of the buffer are unchanged (the write doesn't occur).

**FIGURE 15-21: I²C MASTER MODE WAVEFORM (TRANSMISSION, 7 OR 10-BIT ADDRESS)**

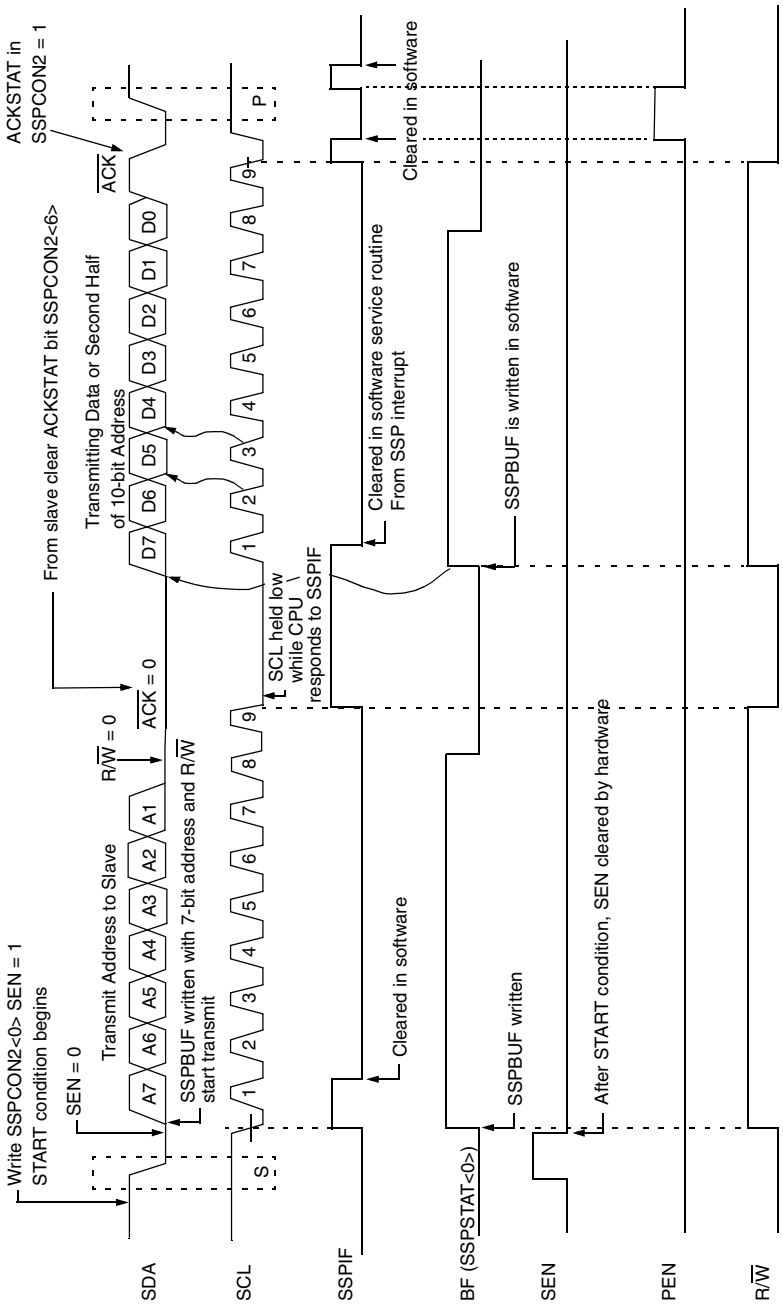



© 2006 Microchip Technology Inc.

**FIGURE 15-22: I²C MASTER MODE WAVEFORM (RECEPTION, 7-BIT ADDRESS)**

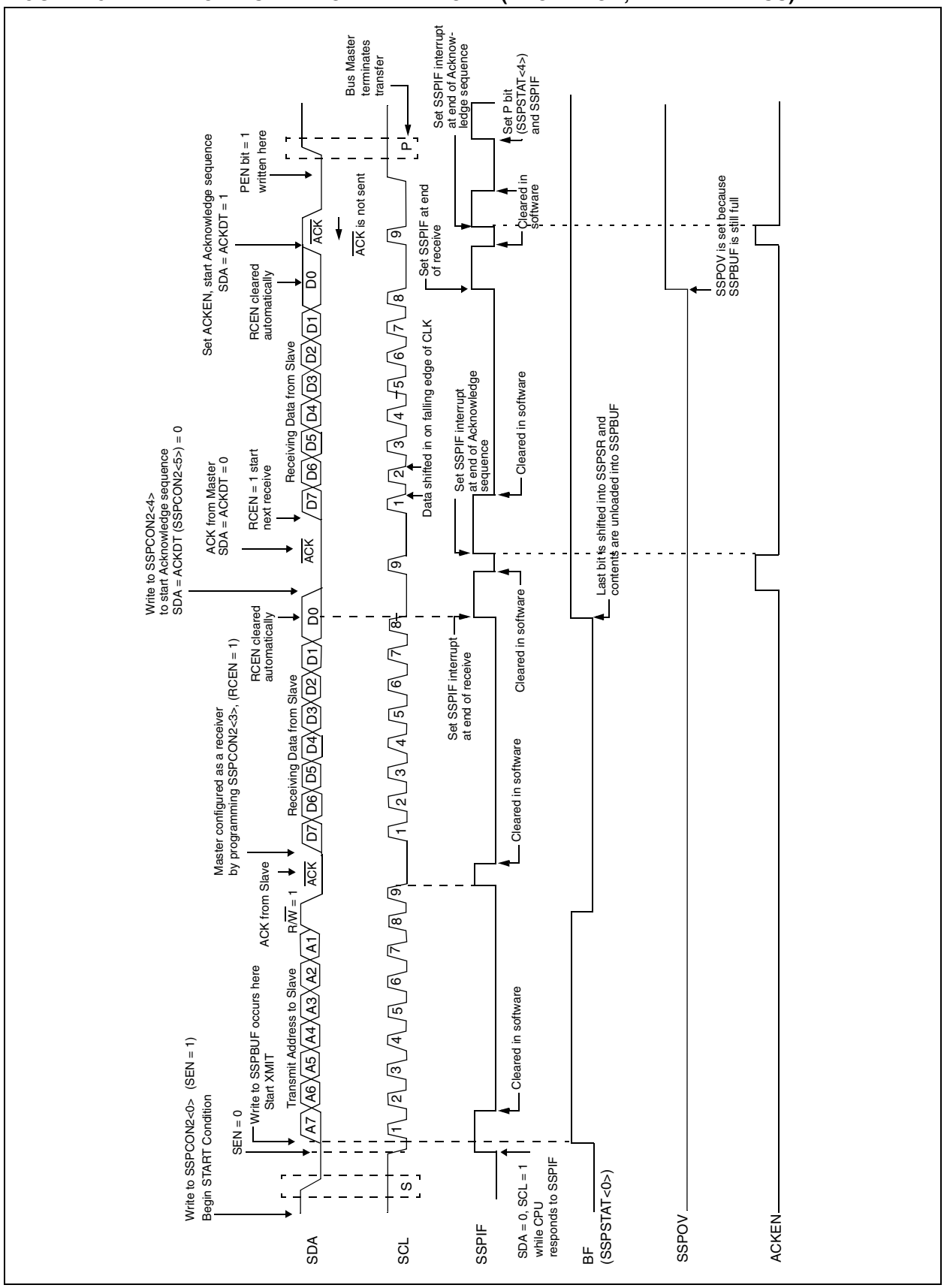

### 15.4.12 ACKNOWLEDGE SEQUENCE TIMING

An Acknowledge sequence is enabled by setting the Acknowledge sequence enable bit, ACKEN (SSPCON2<4>). When this bit is set, the SCL pin is pulled low and the contents of the Acknowledge data bit are presented on the SDA pin. If the user wishes to generate an Acknowledge, then the ACKDT bit should be cleared. If not, the user should set the ACKDT bit before starting an Acknowledge sequence. The baud rate generator then counts for one rollover period (TBRG) and the SCL pin is de-asserted (pulled high). When the SCL pin is sampled high (clock arbitration), the baud rate generator counts for TBRG. The SCL pin is then pulled low. Following this, the ACKEN bit is automatically cleared, the baud rate generator is turned off and the MSSP module then goes into IDLE mode (Figure 15-23).

#### 15.4.12.1 WCOL Status Flag

If the user writes the SSPBUF when an Acknowledge sequence is in progress, then WCOL is set and the contents of the buffer are unchanged (the write doesn't occur).

### 15.4.13 STOP CONDITION TIMING

A STOP bit is asserted on the SDA pin at the end of a receive/transmit by setting the STOP sequence enable bit, PEN (SSPCON2<2>). At the end of a receive/transmit the SCL line is held low after the falling edge of the ninth clock. When the PEN bit is set, the master will assert the SDA line low. When the SDA line is sampled low, the baud rate generator is reloaded and counts down to 0. When the baud rate generator times out, the SCL pin will be brought high, and one TBRG (baud rate generator rollover count) later, the SDA pin will be de-asserted. When the SDA pin is sampled high while SCL is high, the P bit (SSPSTAT<4>) is set. A TBRG later, the PEN bit is cleared and the SSPIF bit is set (Figure 15-24).

#### 15.4.13.1 WCOL Status Flag

If the user writes the SSPBUF when a STOP sequence is in progress, then the WCOL bit is set and the contents of the buffer are unchanged (the write doesn't occur).

**FIGURE 15-23: ACKNOWLEDGE SEQUENCE WAVEFORM**

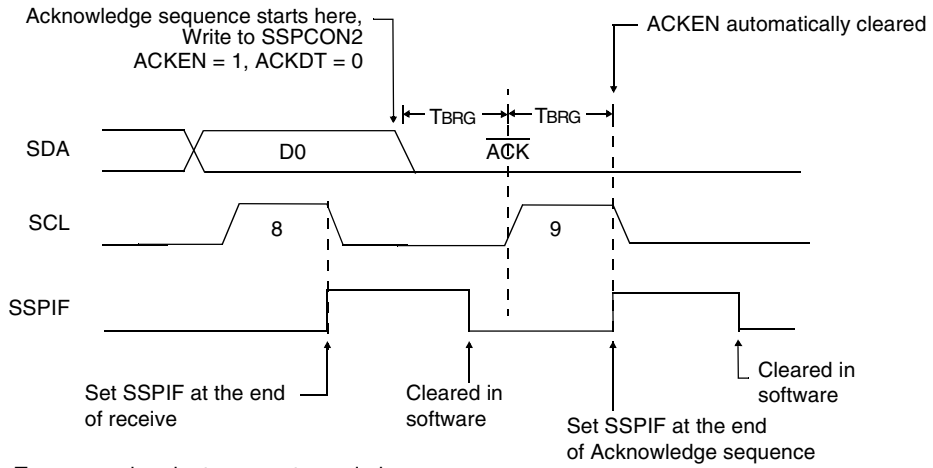


**Note:** TBRG = one baud rate generator period.

**FIGURE 15-24: STOP CONDITION RECEIVE OR TRANSMIT MODE**

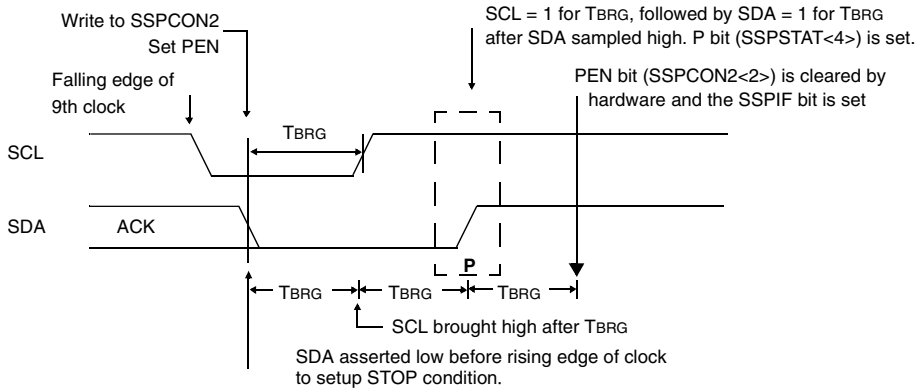


**Note:** TBRG = one baud rate generator period.


© 2006 Microchip Technology Inc.

### 15.4.14 SLEEP OPERATION

While in SLEEP mode, the I$^2$C module can receive addresses or data, and when an address match or complete byte transfer occurs, wake the processor from SLEEP (if the MSSP interrupt is enabled).

### 15.4.15 EFFECT OF A RESET

A RESET disables the MSSP module and terminates the current transfer.

### 15.4.16 MULTI-MASTER MODE

In Multi-Master mode, the interrupt generation on the detection of the START and STOP conditions allows the determination of when the bus is free. The STOP (P) and START (S) bits are cleared from a RESET or when the MSSP module is disabled. Control of the I$^2$C bus may be taken when the P bit (SSPSTAT<4>) is set, or the bus is idle with both the S and P bits clear. When the bus is busy, enabling the SSP interrupt will generate the interrupt when the STOP condition occurs.

In multi-master operation, the SDA line must be monitored for arbitration, to see if the signal level is the expected output level. This check is performed in hardware, with the result placed in the BCLIF bit.

The states where arbitration can be lost are:

- Address Transfer
- Data Transfer
- A START Condition
- A Repeated START Condition
- An Acknowledge Condition

### 15.4.17 MULTI -MASTER COMMUNICATION, BUS COLLISION, AND BUS ARBITRATION

Multi-Master mode support is achieved by bus arbitration. When the master outputs address/data bits onto the SDA pin, arbitration takes place when the master outputs a '1' on SDA, by letting SDA float high and another master asserts a '0'. When the SCL pin floats high, data should be stable. If the expected data on SDA is a '1' and the data sampled on the SDA pin = '0', then a bus collision has taken place. The master will set the Bus Collision Interrupt Flag BCLIF and reset the I$^2$C port to its IDLE state (Figure 15-25).

If a transmit was in progress when the bus collision occurred, the transmission is halted, the BF flag is cleared, the SDA and SCL lines are de-asserted, and the SSPBUF can be written to. When the user services the bus collision Interrupt Service Routine, and if the I$^2$C bus is free, the user can resume communication by asserting a START condition.

If a START, Repeated START, STOP, or Acknowledge condition was in progress when the bus collision occurred, the condition is aborted, the SDA and SCL lines are de-asserted, and the respective control bits in the SSPCON2 register are cleared. When the user services the bus collision Interrupt Service Routine, and if the I$^2$C bus is free, the user can resume communication by asserting a START condition.

The master will continue to monitor the SDA and SCL pins. If a STOP condition occurs, the SSPIF bit will be set.

A write to the SSPBUF will start the transmission of data at the first data bit, regardless of where the transmitter left off when the bus collision occurred.

In Multi-Master mode, the interrupt generation on the detection of START and STOP conditions allows the determination of when the bus is free. Control of the I$^2$C bus can be taken when the P bit is set in the SSPSTAT register, or the bus is IDLE and the S and P bits are cleared.

**FIGURE 15-25: BUS COLLISION TIMING FOR TRANSMIT AND ACKNOWLEDGE**

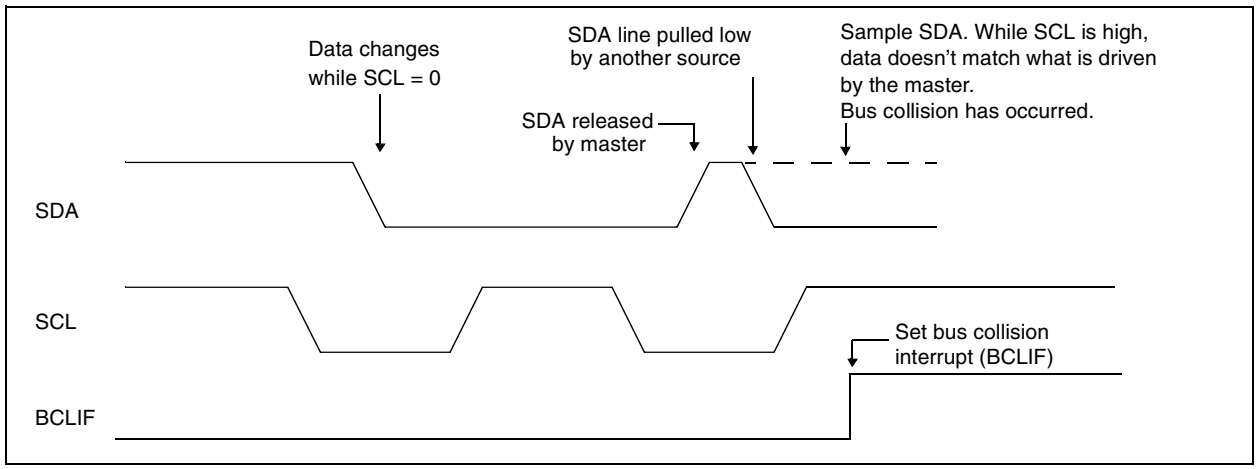

#### 15.4.17.1 Bus Collision During a START Condition

During a START condition, a bus collision occurs if:

a) SDA or SCL are sampled low at the beginning of the START condition (Figure 15-26).

b) SCL is sampled low before SDA is asserted low (Figure 15-27).

During a START condition, both the SDA and the SCL pins are monitored.

If the SDA pin is already low, or the SCL pin is already low, then all of the following occur:

- the START condition is aborted,
- the BCLIF flag is set, and
- the MSSP module is reset to its IDLE state (Figure 15-26).

The START condition begins with the SDA and SCL pins de-asserted. When the SDA pin is sampled high, the baud rate generator is loaded from SSPADD<6:0> and counts down to 0. If the SCL pin is sampled low while SDA is high, a bus collision occurs, because it is assumed that another master is attempting to drive a data '1' during the START condition.

If the SDA pin is sampled low during this count, the BRG is reset and the SDA line is asserted early (Figure 15-28). If, however, a '1' is sampled on the SDA pin, the SDA pin is asserted low at the end of the BRG count. The baud rate generator is then reloaded and counts down to 0, and during this time, if the SCL pins are sampled as '0', a bus collision does not occur. At the end of the BRG count, the SCL pin is asserted low.

> **Note:** The reason that bus collision is not a factor during a START condition is that no two bus masters can assert a START condition at the exact same time. Therefore, one master will always assert SDA before the other. This condition does not cause a bus collision, because the two masters must be allowed to arbitrate the first address following the START condition. If the address is the same, arbitration must be allowed to continue into the data portion, Repeated START or STOP conditions.

**FIGURE 15-26: BUS COLLISION DURING START CONDITION (SDA ONLY)**

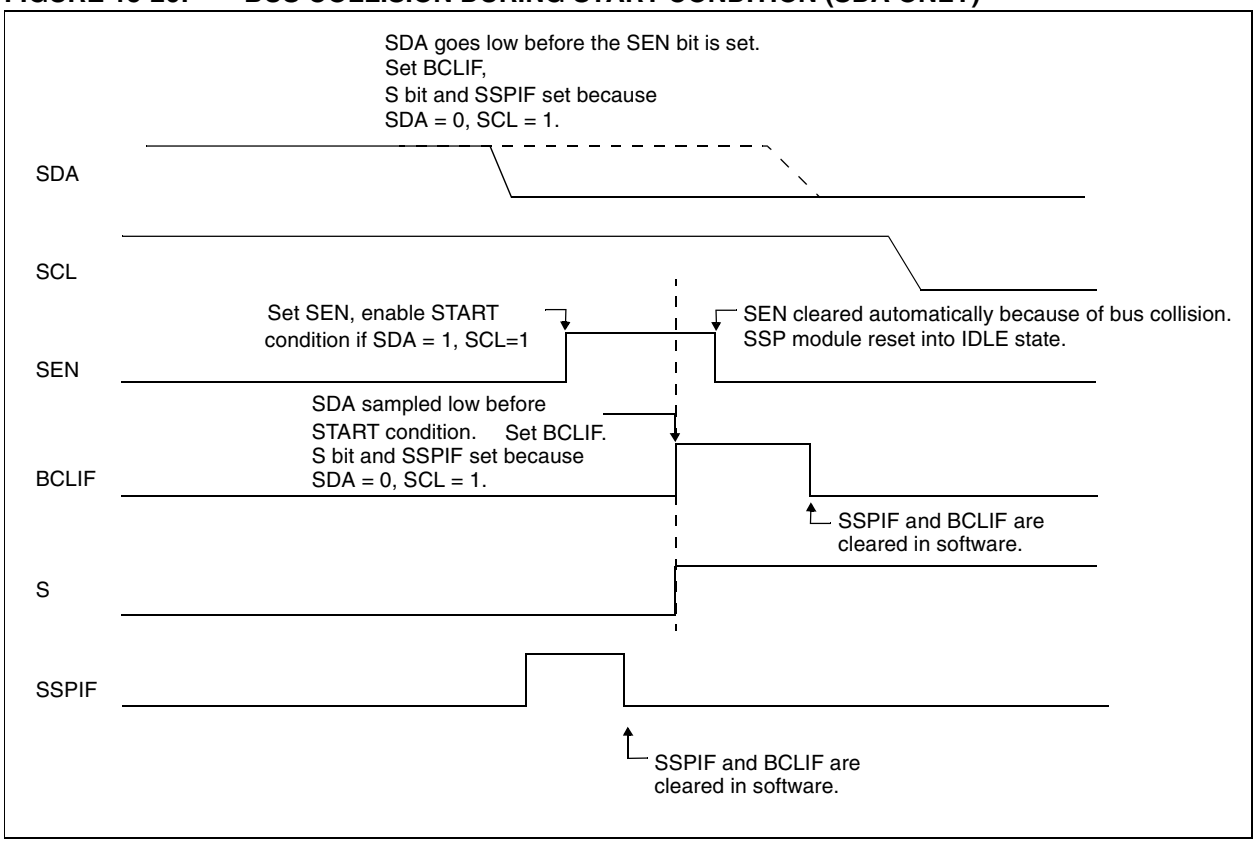



© 2006 Microchip Technology Inc.

**FIGURE 15-27: BUS COLLISION DURING START CONDITION (SCL = 0)**

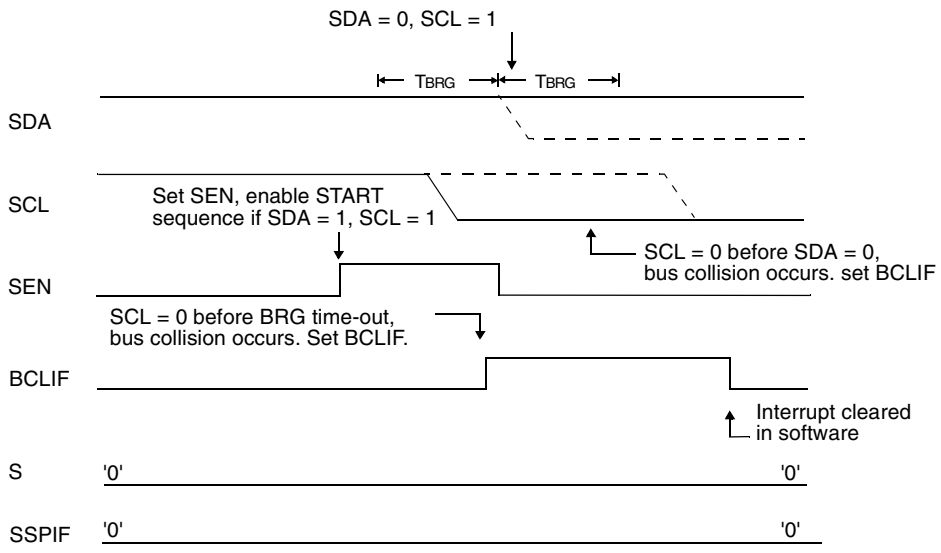


**FIGURE 15-28: BRG RESET DUE TO SDA ARBITRATION DURING START CONDITION**

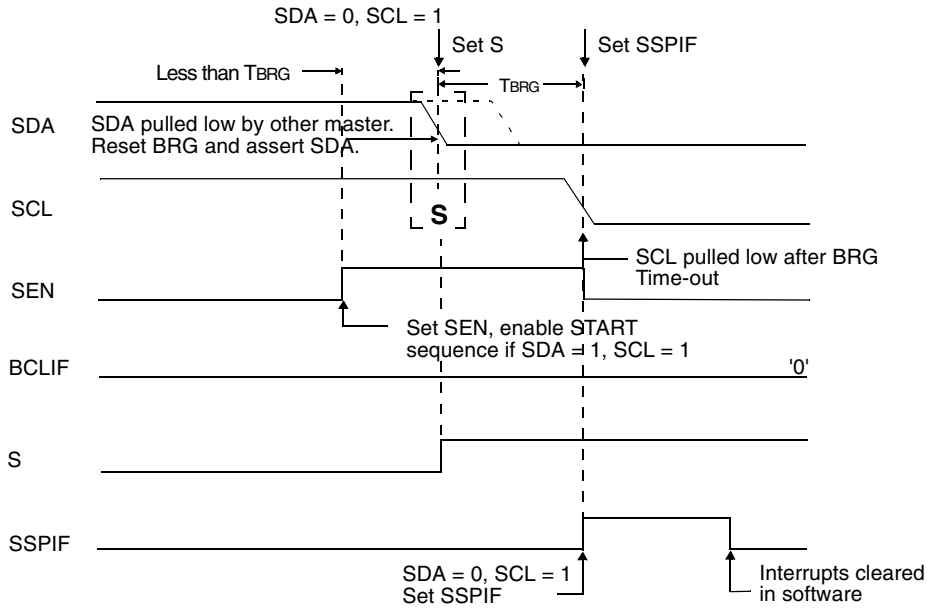

#### 15.4.17.2 Bus Collision During a Repeated START Condition

During a Repeated START condition, a bus collision occurs if:

a) A low level is sampled on SDA when SCL goes from low level to high level.

b) SCL goes low before SDA is asserted low, indicating that another master is attempting to transmit a data '1'.

When the user de-asserts SDA and the pin is allowed to float high, the BRG is loaded with SSPADD<6:0> and counts down to 0. The SCL pin is then de-asserted, and when sampled high, the SDA pin is sampled.

If SDA is low, a bus collision has occurred (i.e., another master is attempting to transmit a data '0', Figure 15-29). If SDA is sampled high, the BRG is reloaded and begins counting. If SDA goes from high to low before the BRG times out, no bus collision occurs because no two masters can assert SDA at exactly the same time.

If SCL goes from high to low before the BRG times out and SDA has not already been asserted, a bus collision occurs. In this case, another master is attempting to transmit a data '1' during the Repeated START condition, Figure 15-30.

If, at the end of the BRG time-out both SCL and SDA are still high, the SDA pin is driven low and the BRG is reloaded and begins counting. At the end of the count, regardless of the status of the SCL pin, the SCL pin is driven low and the Repeated START condition is complete.

**FIGURE 15-29: BUS COLLISION DURING A REPEATED START CONDITION (CASE 1)**

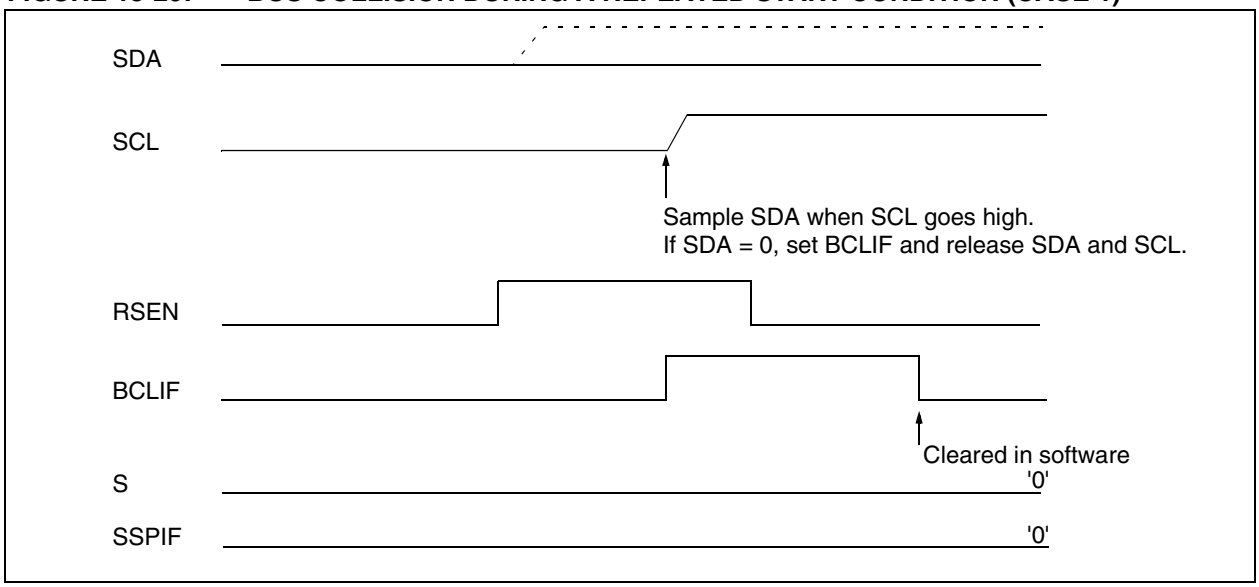


**FIGURE 15-30: BUS COLLISION DURING REPEATED START CONDITION (CASE 2)**

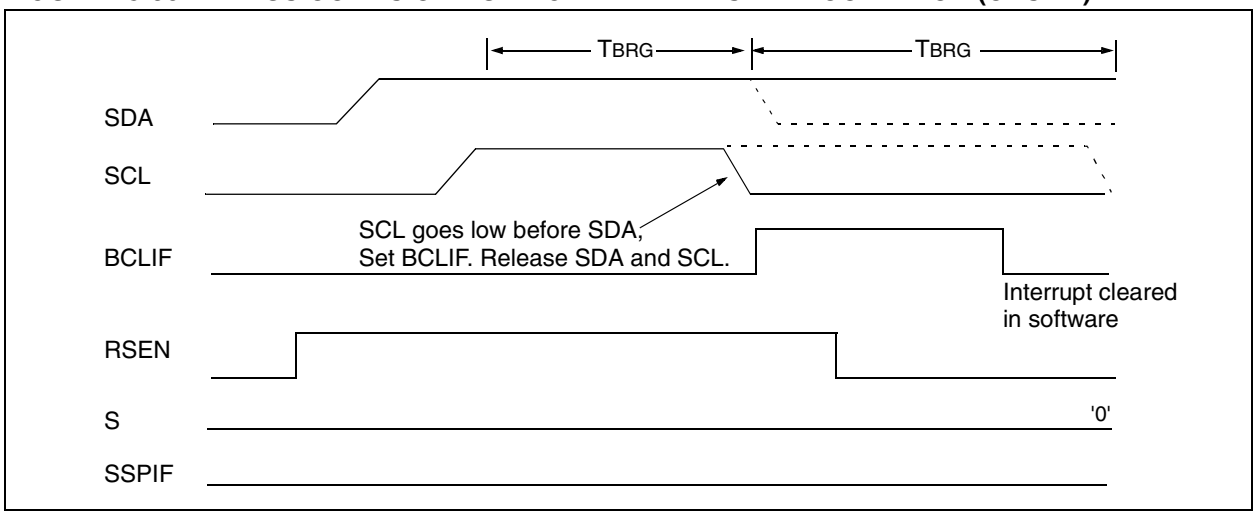



© 2006 Microchip Technology Inc.

#### 15.4.17.3 Bus Collision During a STOP Condition

Bus collision occurs during a STOP condition if:

a) After the SDA pin has been de-asserted and allowed to float high, SDA is sampled low after the BRG has timed out.

b) After the SCL pin is de-asserted, SCL is sampled low before SDA goes high.

The STOP condition begins with SDA asserted low. When SDA is sampled low, the SCL pin is allowed to float. When the pin is sampled high (clock arbitration), the baud rate generator is loaded with SSPADD<6:0> and counts down to 0. After the BRG times out, SDA is sampled. If SDA is sampled low, a bus collision has occurred. This is due to another master attempting to drive a data '0' (Figure 15-31). If the SCL pin is sampled low before SDA is allowed to float high, a bus collision occurs. This is another case of another master attempting to drive a data '0' (Figure 15-32).

**FIGURE 15-31: BUS COLLISION DURING A STOP CONDITION (CASE 1)**

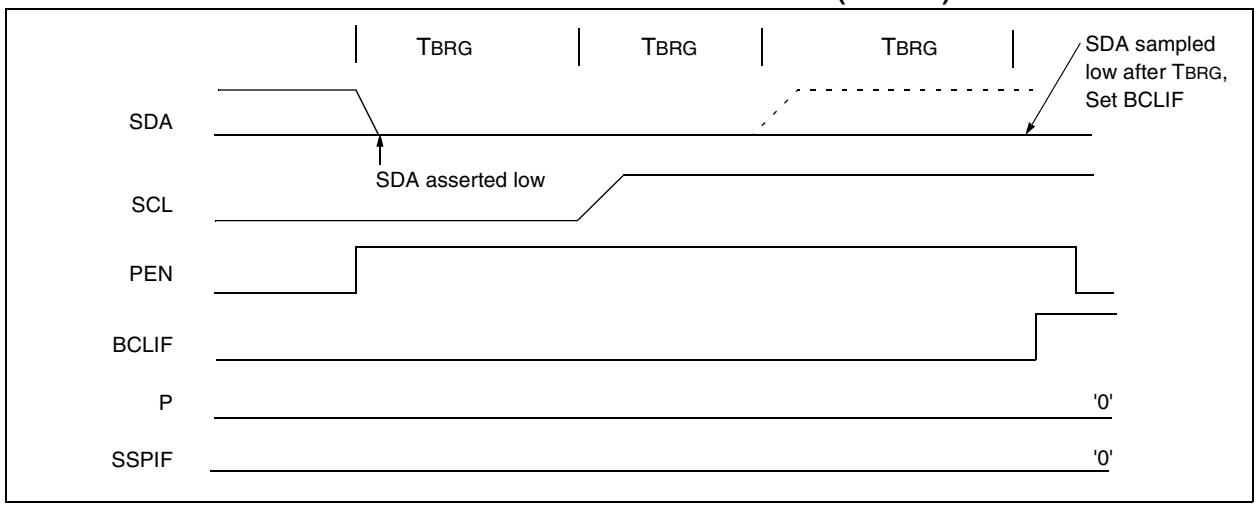


**FIGURE 15-32: BUS COLLISION DURING A STOP CONDITION (CASE 2)**

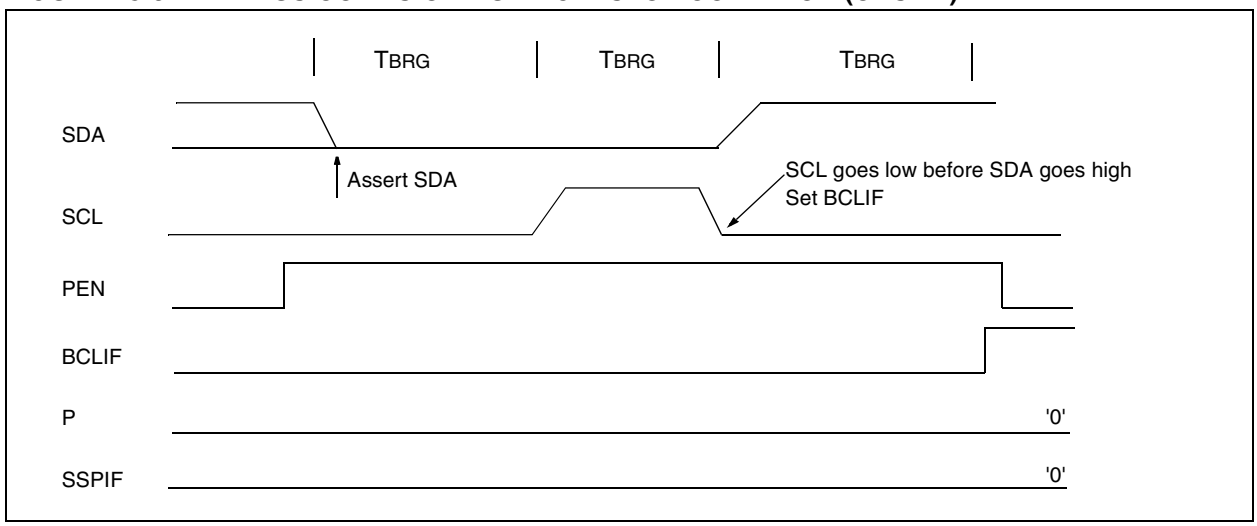

**NOTES:**


© 2006 Microchip Technology Inc.

# 16.0 ADDRESSABLE UNIVERSAL SYNCHRONOUS ASYNCHRONOUS RECEIVER TRANSMITTER (USART)

The Universal Synchronous Asynchronous Receiver Transmitter (USART) module is one of the two serial I/O modules. (USART is also known as a Serial Communications Interface or SCI.) The USART can be configured as a full duplex asynchronous system that can communicate with peripheral devices, such as CRT terminals and personal computers, or it can be configured as a half-duplex synchronous system that can communicate with peripheral devices, such as A/D or D/A integrated circuits, serial EEPROMs, etc.

The USART can be configured in the following modes:

- Asynchronous (full-duplex)
- Synchronous - Master (half-duplex)
- Synchronous - Slave (half-duplex)

In order to configure pins RC6/TX/CK and RC7/RX/DT as the Universal Synchronous Asynchronous Receiver Transmitter:

- bit SPEN (RCSTA<7>) must be set (= 1),
- bit TRISC<6> must be cleared (= 0), and
- bit TRISC<7> must be set (=1).

Register 16-1 shows the Transmit Status and Control Register (TXSTA) and Register 16-2 shows the Receive Status and Control Register (RCSTA).

**REGISTER 16-1: TXSTA: TRANSMIT STATUS AND CONTROL REGISTER**

| R/W-0 | R/W-0 | R/W-0 | R/W-0 | U-0 | R/W-0 | R-1 | R/W-0 |
|---|---|---|---|---|---|---|---|
| CSRC | TX9 | TXEN | SYNC | — | BRGH | TRMT | TX9D |
| bit 7 | | | | | | | bit 0 |

bit 7 **CSRC:** Clock Source Select bit
Asynchronous mode:
Don't care
Synchronous mode:
1 = Master mode (clock generated internally from BRG)
0 = Slave mode (clock from external source)

bit 6 **TX9**: 9-bit Transmit Enable bit
1 = Selects 9-bit transmission
0 = Selects 8-bit transmission

bit 5 **TXEN**: Transmit Enable bit
1 = Transmit enabled
0 = Transmit disabled

**Note:** SREN/CREN overrides TXEN in SYNC mode.

bit 4 **SYNC**: USART Mode Select bit
1 = Synchronous mode
0 = Asynchronous mode

bit 3 **Unimplemented:** Read as '0'

bit 2 **BRGH**: High Baud Rate Select bit
Asynchronous mode:
1 = High speed
0 = Low speed
Synchronous mode:
Unused in this mode

bit 1 **TRMT**: Transmit Shift Register Status bit
1 = TSR empty
0 = TSR full

bit 0 **TX9D:** 9th bit of Transmit Data
Can be Address/Data bit or a parity bit.

| Legend: | | | |
|---|---|---|---|
| R = Readable bit | W = Writable bit | U = Unimplemented bit, read as '0' | |
| - n = Value at POR | '1' = Bit is set | '0' = Bit is cleared | x = Bit is unknown |


© 2006 Microchip Technology Inc.

**REGISTER 16-2: RCSTA: RECEIVE STATUS AND CONTROL REGISTER**

| R/W-0 | R/W-0 | R/W-0 | R/W-0 | R/W-0 | R-0 | R-0 | R-x |
|---|---|---|---|---|---|---|---|
| SPEN | RX9 | SREN | CREN | ADDEN | FERR | OERR | RX9D |
| bit 7 | | | | | | | bit 0 |

bit 7 **SPEN:** Serial Port Enable bit
1 = Serial port enabled (configures RX/DT and TX/CK pins as serial port pins)
0 = Serial port disabled

bit 6 **RX9**: 9-bit Receive Enable bit
1 = Selects 9-bit reception
0 = Selects 8-bit reception

bit 5 **SREN**: Single Receive Enable bit
Asynchronous mode:
Don't care
Synchronous mode - Master:
1 = Enables single receive
0 = Disables single receive
This bit is cleared after reception is complete.
Synchronous mode - Slave:
Don't care

bit 4 **CREN**: Continuous Receive Enable bit
Asynchronous mode:
1 = Enables receiver
0 = Disables receiver
Synchronous mode:
1 = Enables continuous receive until enable bit CREN is cleared (CREN overrides SREN)
0 = Disables continuous receive

bit 3 **ADDEN**: Address Detect Enable bit
Asynchronous mode 9-bit (RX9 = 1):
1 = Enables address detection, enable interrupt and load of the receive buffer when RSR<8> is set
0 = Disables address detection, all bytes are received, and ninth bit can be used as parity bit

bit 2 **FERR**: Framing Error bit
1 = Framing error (can be updated by reading RCREG register and receive next valid byte)
0 = No framing error

bit 1 **OERR**: Overrun Error bit
1 = Overrun error (can be cleared by clearing bit CREN)
0 = No overrun error

bit 0 **RX9D:** 9th bit of Received Data
This can be Address/Data bit or a parity bit, and must be calculated by user firmware.

| Legend: | | | |
|---|---|---|---|
| R = Readable bit | W = Writable bit | U = Unimplemented bit, read as '0' | |
| - n = Value at POR | '1' = Bit is set | '0' = Bit is cleared | x = Bit is unknown |

## 16.1 USART Baud Rate Generator (BRG)

The BRG supports both the Asynchronous and Synchronous modes of the USART. It is a dedicated 8-bit baud rate generator. The SPBRG register controls the period of a free running 8-bit timer. In Asynchronous mode, bit BRGH (TXSTA<2>) also controls the baud rate. In Synchronous mode, bit BRGH is ignored. Table 16-1 shows the formula for computation of the baud rate for different USART modes, which only apply in Master mode (internal clock).

Given the desired baud rate and Fosc, the nearest integer value for the SPBRG register can be calculated using the formula in Table 16-1. From this, the error in baud rate can be determined.

Example 16-1 shows the calculation of the baud rate error for the following conditions:

- FOSC = 16 MHz
- Desired Baud Rate = 9600
- BRGH = 0
- SYNC = 0

It may be advantageous to use the high baud rate (BRGH = 1) even for slower baud clocks. This is because the FOSC/(16(X + 1)) equation can reduce the baud rate error in some cases.

Writing a new value to the SPBRG register causes the BRG timer to be reset (or cleared). This ensures the BRG does not wait for a timer overflow before outputting the new baud rate.

### 16.1.1 SAMPLING

The data on the RC7/RX/DT pin is sampled three times by a majority detect circuit to determine if a high or a low level is present at the RX pin.

**EXAMPLE 16-1: CALCULATING BAUD RATE ERROR**

Desired Baud Rate = FOSC / (64 (X + 1))

Solving for X:

X = ( (FOSC / Desired Baud Rate) / 64 ) – 1
X = ((16000000 / 9600) / 64) – 1
X = [25.042] = 25

Calculated Baud Rate = 16000000 / (64 (25 + 1))
= 9615

Error = (Calculated Baud Rate – Desired Baud Rate) / Desired Baud Rate
= (9615 – 9600) / 9600
= 0.16%

**TABLE 16-1: BAUD RATE FORMULA**

| SYNC | BRGH = 0 (Low Speed) | BRGH = 1 (High Speed) |
|---|---|---|
| 0 | (Asynchronous) Baud Rate = FOSC/(64(X+1)) | Baud Rate = FOSC/(16(X+1)) |
| 1 | (Synchronous) Baud Rate = FOSC/(4(X+1)) | N/A |

Legend: X = value in SPBRG (0 to 255)

**TABLE 16-2: REGISTERS ASSOCIATED WITH BAUD RATE GENERATOR**

| Name | Bit 7 | Bit 6 | Bit 5 | Bit 4 | Bit 3 | Bit 2 | Bit 1 | Bit 0 | Value on POR, BOR | Value on All Other RESETS |
|---|---|---|---|---|---|---|---|---|---|---|
| TXSTA | CSRC | TX9 | TXEN | SYNC | — | BRGH | TRMT | TX9D | 0000 -010 | 0000 -010 |
| RCSTA | SPEN | RX9 | SREN | CREN | ADDEN | FERR | OERR | RX9D | 0000 -00x | 0000 -00x |
| SPBRG | Baud Rate Generator Register | | | | | | | | 0000 0000 | 0000 0000 |

Legend: x = unknown, - = unimplemented, read as '0'. Shaded cells are not used by the BRG.


© 2006 Microchip Technology Inc.

## TABLE 16-3: BAUD RATES FOR SYNCHRONOUS MODE

| BAUD RATE (Kbps) | Fosc = 40 MHz | | SPBRG value (decimal) | 33 MHz | | SPBRG value (decimal) | 25 MHz | | SPBRG value (decimal) | 20 MHz | | SPBRG value (decimal) |
|---|---|---|---|---|---|---|---|---|---|---|---|---|
| | KBAUD | % ERROR | | KBAUD | % ERROR | | KBAUD | % ERROR | | KBAUD | % ERROR | |
| 0.3 | NA | - | - | NA | - | - | NA | - | - | NA | - | - |
| 1.2 | NA | - | - | NA | - | - | NA | - | - | NA | - | - |
| 2.4 | NA | - | - | NA | - | - | NA | - | - | NA | - | - |
| 9.6 | NA | - | - | NA | - | - | NA | - | - | NA | - | - |
| 19.2 | NA | - | - | NA | - | - | NA | - | - | NA | - | - |
| 76.8 | 76.92 | +0.16 | 129 | 77.10 | +0.39 | 106 | 77.16 | +0.47 | 80 | 76.92 | +0.16 | 64 |
| 96 | 96.15 | +0.16 | 103 | 95.93 | -0.07 | 85 | 96.15 | +0.16 | 64 | 96.15 | +0.16 | 51 |
| 300 | 303.03 | +1.01 | 32 | 294.64 | -1.79 | 27 | 297.62 | -0.79 | 20 | 294.12 | -1.96 | 16 |
| 500 | 500 | 0 | 19 | 485.30 | -2.94 | 16 | 480.77 | -3.85 | 12 | 500 | 0 | 9 |
| HIGH | 10000 | - | 0 | 8250 | - | 0 | 6250 | - | 0 | 5000 | - | 0 |
| LOW | 39.06 | - | 255 | 32.23 | - | 255 | 24.41 | - | 255 | 19.53 | - | 255 |

| BAUD RATE (Kbps) | Fosc = 16 MHz | | SPBRG value (decimal) | 10 MHz | | SPBRG value (decimal) | 7.15909 MHz | | SPBRG value (decimal) | 5.0688 MHz | | SPBRG value (decimal) |
|---|---|---|---|---|---|---|---|---|---|---|---|---|
| | KBAUD | % ERROR | | KBAUD | % ERROR | | KBAUD | % ERROR | | KBAUD | % ERROR | |
| 0.3 | NA | - | - | NA | - | - | NA | - | - | NA | - | - |
| 1.2 | NA | - | - | NA | - | - | NA | - | - | NA | - | - |
| 2.4 | NA | - | - | NA | - | - | NA | - | - | NA | - | - |
| 9.6 | NA | - | - | NA | - | - | 9.62 | +0.23 | 185 | 9.60 | 0 | 131 |
| 19.2 | 19.23 | +0.16 | 207 | 19.23 | +0.16 | 129 | 19.24 | +0.23 | 92 | 19.20 | 0 | 65 |
| 76.8 | 76.92 | +0.16 | 51 | 75.76 | -1.36 | 32 | 77.82 | +1.32 | 22 | 74.54 | -2.94 | 16 |
| 96 | 95.24 | -0.79 | 41 | 96.15 | +0.16 | 25 | 94.20 | -1.88 | 18 | 97.48 | +1.54 | 12 |
| 300 | 307.70 | +2.56 | 12 | 312.50 | +4.17 | 7 | 298.35 | -0.57 | 5 | 316.80 | +5.60 | 3 |
| 500 | 500 | 0 | 7 | 500 | 0 | 4 | 447.44 | -10.51 | 3 | 422.40 | -15.52 | 2 |
| HIGH | 4000 | - | 0 | 2500 | - | 0 | 1789.80 | - | 0 | 1267.20 | - | 0 |
| LOW | 15.63 | - | 255 | 9.77 | - | 255 | 6.99 | - | 255 | 4.95 | - | 255 |

| BAUD RATE (Kbps) | Fosc = 4 MHz | | SPBRG value (decimal) | 3.579545 MHz | | SPBRG value (decimal) | 1 MHz | | SPBRG value (decimal) | 32.768 kHz | | SPBRG value (decimal) |
|---|---|---|---|---|---|---|---|---|---|---|---|---|
| | KBAUD | % ERROR | | KBAUD | % ERROR | | KBAUD | % ERROR | | KBAUD | % ERROR | |
| 0.3 | NA | - | - | NA | - | - | NA | - | - | 0.30 | +1.14 | 26 |
| 1.2 | NA | - | - | NA | - | - | 1.20 | +0.16 | 207 | 1.17 | -2.48 | 6 |
| 2.4 | NA | - | - | NA | - | - | 2.40 | +0.16 | 103 | 2.73 | +13.78 | 2 |
| 9.6 | 9.62 | +0.16 | 103 | 9.62 | +0.23 | 92 | 9.62 | +0.16 | 25 | 8.20 | -14.67 | 0 |
| 19.2 | 19.23 | +0.16 | 51 | 19.04 | -0.83 | 46 | 19.23 | +0.16 | 12 | NA | - | - |
| 76.8 | 76.92 | +0.16 | 12 | 74.57 | -2.90 | 11 | 83.33 | +8.51 | 2 | NA | - | - |
| 96 | 1000 | +4.17 | 9 | 99.43 | +3.57 | 8 | 83.33 | -13.19 | 2 | NA | - | - |
| 300 | 333.33 | +11.11 | 2 | 298.30 | -0.57 | 2 | 250 | -16.67 | 0 | NA | - | - |
| 500 | 500 | 0 | 1 | 447.44 | -10.51 | 1 | NA | - | - | NA | - | - |
| HIGH | 1000 | - | 0 | 894.89 | - | 0 | 250 | - | 0 | 8.20 | - | 0 |
| LOW | 3.91 | - | 255 | 3.50 | - | 255 | 0.98 | - | 255 | 0.03 | - | 255 |

© 2006 Microchip Technology Inc.

## TABLE 16-4: BAUD RATES FOR ASYNCHRONOUS MODE (BRGH = 0)

| BAUD RATE (Kbps) | FOSC = 40 MHz | | SPBRG value (decimal) | 33 MHz | | SPBRG value (decimal) | 25 MHz | | SPBRG value (decimal) | 20 MHz | | SPBRG value (decimal) |
|---|---|---|---|---|---|---|---|---|---|---|---|---|
| | KBAUD | % ERROR | | KBAUD | % ERROR | | KBAUD | % ERROR | | KBAUD | % ERROR | |
| 0.3 | NA | - | - | NA | - | - | NA | - | - | NA | - | - |
| 1.2 | NA | - | - | NA | - | - | NA | - | - | NA | - | - |
| 2.4 | NA | - | - | 2.40 | -0.07 | 214 | 2.40 | -0.15 | 162 | 2.40 | +0.16 | 129 |
| 9.6 | 9.62 | +0.16 | 64 | 9.55 | -0.54 | 53 | 9.53 | -0.76 | 40 | 9.47 | -1.36 | 32 |
| 19.2 | 18.94 | -1.36 | 32 | 19.10 | -0.54 | 26 | 19.53 | +1.73 | 19 | 19.53 | +1.73 | 15 |
| 76.8 | 78.13 | +1.73 | 7 | 73.66 | -4.09 | 6 | 78.13 | +1.73 | 4 | 78.13 | +1.73 | 3 |
| 96 | 89.29 | -6.99 | 6 | 103.13 | +7.42 | 4 | 97.66 | +1.73 | 3 | 104.17 | +8.51 | 2 |
| 300 | 312.50 | +4.17 | 1 | 257.81 | -14.06 | 1 | NA | - | - | 312.50 | +4.17 | 0 |
| 500 | 625 | +25.00 | 0 | NA | - | - | NA | - | - | NA | - | - |
| HIGH | 625 | - | 0 | 515.63 | - | 0 | 390.63 | - | 0 | 312.50 | - | 0 |
| LOW | 2.44 | - | 255 | 2.01 | - | 255 | 1.53 | - | 255 | 1.22 | - | 255 |

| BAUD RATE (Kbps) | FOSC = 16 MHz | | SPBRG value (decimal) | 10 MHz | | SPBRG value (decimal) | 7.15909 MHz | | SPBRG value (decimal) | 5.0688 MHz | | SPBRG value (decimal) |
|---|---|---|---|---|---|---|---|---|---|---|---|---|
| | KBAUD | % ERROR | | KBAUD | % ERROR | | KBAUD | % ERROR | | KBAUD | % ERROR | |
| 0.3 | NA | - | - | NA | - | - | NA | - | - | NA | - | - |
| 1.2 | 1.20 | +0.16 | 207 | 1.20 | +0.16 | 129 | 1.20 | +0.23 | 92 | 1.20 | 0 | 65 |
| 2.4 | 2.40 | +0.16 | 103 | 2.40 | +0.16 | 64 | 2.38 | -0.83 | 46 | 2.40 | 0 | 32 |
| 9.6 | 9.62 | +0.16 | 25 | 9.77 | +1.73 | 15 | 9.32 | -2.90 | 11 | 9.90 | +3.13 | 7 |
| 19.2 | 19.23 | +0.16 | 12 | 19.53 | +1.73 | 7 | 18.64 | -2.90 | 5 | 19.80 | +3.13 | 3 |
| 76.8 | 83.33 | +8.51 | 2 | 78.13 | +1.73 | 1 | 111.86 | +45.65 | 0 | 79.20 | +3.13 | 0 |
| 96 | 83.33 | -13.19 | 2 | 78.13 | -18.62 | 1 | NA | - | - | NA | - | - |
| 300 | 250 | -16.67 | 0 | 156.25 | -47.92 | 0 | NA | - | - | NA | - | - |
| 500 | NA | - | - | NA | - | - | NA | - | - | NA | - | - |
| HIGH | 250 | - | 0 | 156.25 | - | 0 | 111.86 | - | 0 | 79.20 | - | 0 |
| LOW | 0.98 | - | 255 | 0.61 | - | 255 | 0.44 | - | 255 | 0.31 | - | 255 |

| BAUD RATE (Kbps) | FOSC = 4 MHz | | SPBRG value (decimal) | 3.579545 MHz | | SPBRG value (decimal) | 1 MHz | | SPBRG value (decimal) | 32.768 kHz | | SPBRG value (decimal) |
|---|---|---|---|---|---|---|---|---|---|---|---|---|
| | KBAUD | % ERROR | | KBAUD | % ERROR | | KBAUD | % ERROR | | KBAUD | % ERROR | |
| 0.3 | 0.30 | -0.16 | 207 | 0.30 | +0.23 | 185 | 0.30 | +0.16 | 51 | 0.26 | -14.67 | 1 |
| 1.2 | 1.20 | +1.67 | 51 | 1.19 | -0.83 | 46 | 1.20 | +0.16 | 12 | NA | - | - |
| 2.4 | 2.40 | +1.67 | 25 | 2.43 | +1.32 | 22 | 2.23 | -6.99 | 6 | NA | - | - |
| 9.6 | 8.93 | -6.99 | 6 | 9.32 | -2.90 | 5 | 7.81 | -18.62 | 1 | NA | - | - |
| 19.2 | 20.83 | +8.51 | 2 | 18.64 | -2.90 | 2 | 15.63 | -18.62 | 0 | NA | - | - |
| 76.8 | 62.50 | -18.62 | 0 | 55.93 | -27.17 | 0 | NA | - | - | NA | - | - |
| 96 | NA | - | - | NA | - | - | NA | - | - | NA | - | - |
| 300 | NA | - | - | NA | - | - | NA | - | - | NA | - | - |
| 500 | NA | - | - | NA | - | - | NA | - | - | NA | - | - |
| HIGH | 62.50 | - | 0 | 55.93 | - | 0 | 15.63 | - | 0 | 0.51 | - | 0 |
| LOW | 0.24 | - | 255 | 0.22 | - | 255 | 0.06 | - | 255 | 0.002 | - | 255 |


© 2006 Microchip Technology Inc.

## TABLE 16-5: BAUD RATES FOR ASYNCHRONOUS MODE (BRGH = 1)

| BAUD RATE (Kbps) | Fosc = 40 MHz | | SPBRG value (decimal) | 33 MHz | | SPBRG value (decimal) | 25 MHz | | SPBRG value (decimal) | 20 MHz | | SPBRG value (decimal) |
|---|---|---|---|---|---|---|---|---|---|---|---|---|
| | KBAUD | % ERROR | | KBAUD | % ERROR | | KBAUD | % ERROR | | KBAUD | % ERROR | |
| 0.3 | NA | - | - | NA | - | - | NA | - | - | NA | - | - |
| 1.2 | NA | - | - | NA | - | - | NA | - | - | NA | - | - |
| 2.4 | NA | - | - | NA | - | - | NA | - | - | NA | - | - |
| 9.6 | NA | - | - | 9.60 | -0.07 | 214 | 9.59 | -0.15 | 162 | 9.62 | +0.16 | 129 |
| 19.2 | 19.23 | +0.16 | 129 | 19.28 | +0.39 | 106 | 19.30 | +0.47 | 80 | 19.23 | +0.16 | 64 |
| 76.8 | 75.76 | -1.36 | 32 | 76.39 | -0.54 | 26 | 78.13 | +1.73 | 19 | 78.13 | +1.73 | 15 |
| 96 | 96.15 | +0.16 | 25 | 98.21 | +2.31 | 20 | 97.66 | +1.73 | 15 | 96.15 | +0.16 | 12 |
| 300 | 312.50 | +4.17 | 7 | 294.64 | -1.79 | 6 | 312.50 | +4.17 | 4 | 312.50 | +4.17 | 3 |
| 500 | 500 | 0 | 4 | 515.63 | +3.13 | 3 | 520.83 | +4.17 | 2 | 416.67 | -16.67 | 2 |
| HIGH | 2500 | - | 0 | 2062.50 | - | 0 | 1562.50 | - | 0 | 1250 | - | 0 |
| LOW | 9.77 | - | 255 | 8,06 | - | 255 | 6.10 | - | 255 | 4.88 | - | 255 |

| BAUD RATE (Kbps) | Fosc = 16 MHz | | SPBRG value (decimal) | 10 MHz | | SPBRG value (decimal) | 7.15909 MHz | | SPBRG value (decimal) | 5.0688 MHz | | SPBRG value (decimal) |
|---|---|---|---|---|---|---|---|---|---|---|---|---|
| | KBAUD | % ERROR | | KBAUD | % ERROR | | KBAUD | % ERROR | | KBAUD | % ERROR | |
| 0.3 | NA | - | - | NA | - | - | NA | - | - | NA | - | - |
| 1.2 | NA | - | - | NA | - | - | NA | - | - | NA | - | - |
| 2.4 | NA | - | - | NA | - | - | 2.41 | +0.23 | 185 | 2.40 | 0 | 131 |
| 9.6 | 9.62 | +0.16 | 103 | 9.62 | +0.16 | 64 | 9.52 | -0.83 | 46 | 9.60 | 0 | 32 |
| 19.2 | 19.23 | +0.16 | 51 | 18.94 | -1.36 | 32 | 19.45 | +1.32 | 22 | 18.64 | -2.94 | 16 |
| 76.8 | 76.92 | +0.16 | 12 | 78.13 | +1.73 | 7 | 74.57 | -2.90 | 5 | 79.20 | +3.13 | 3 |
| 96 | 100 | +4.17 | 9 | 89.29 | -6.99 | 6 | 89.49 | -6.78 | 4 | 105.60 | +10.00 | 2 |
| 300 | 333.33 | +11.11 | 2 | 312.50 | +4.17 | 1 | 447.44 | +49.15 | 0 | 316.80 | +5.60 | 0 |
| 500 | 500 | 0 | 1 | 625 | +25.00 | 0 | 447.44 | -10.51 | 0 | NA | - | - |
| HIGH | 1000 | - | 0 | 625 | - | 0 | 447.44 | - | 0 | 316.80 | - | 0 |
| LOW | 3.91 | - | 255 | 2.44 | - | 255 | 1.75 | - | 255 | 1.24 | - | 255 |

| BAUD RATE (Kbps) | Fosc = 4 MHz | | SPBRG value (decimal) | 3.579545 MHz | | SPBRG value (decimal) | 1 MHz | | SPBRG value (decimal) | 32.768 kHz | | SPBRG value (decimal) |
|---|---|---|---|---|---|---|---|---|---|---|---|---|
| | KBAUD | % ERROR | | KBAUD | % ERROR | | KBAUD | % ERROR | | KBAUD | % ERROR | |
| 0.3 | NA | - | - | NA | - | - | 0.30 | +0.16 | 207 | 0.29 | -2.48 | 6 |
| 1.2 | 1.20 | +0.16 | 207 | 1.20 | +0.23 | 185 | 1.20 | +0.16 | 51 | 1.02 | -14.67 | 1 |
| 2.4 | 2.40 | +0.16 | 103 | 2.41 | +0.23 | 92 | 2.40 | +0.16 | 25 | 2.05 | -14.67 | 0 |
| 9.6 | 9.62 | +0.16 | 25 | 9.73 | +1.32 | 22 | 8.93 | -6.99 | 6 | NA | - | - |
| 19.2 | 19.23 | +0.16 | 12 | 18.64 | -2.90 | 11 | 20.83 | +8.51 | 2 | NA | - | - |
| 76.8 | NA | - | - | 74.57 | -2.90 | 2 | 62.50 | -18.62 | 0 | NA | - | - |
| 96 | NA | - | - | 111.86 | +16.52 | 1 | NA | - | - | NA | - | - |
| 300 | NA | - | - | 223.72 | -25.43 | 0 | NA | - | - | NA | - | - |
| 500 | NA | - | - | NA | - | - | NA | - | - | NA | - | - |
| HIGH | 250 | - | 0 | 55.93 | - | 0 | 62.50 | - | 0 | 2.05 | - | 0 |
| LOW | 0.98 | - | 255 | 0.22 | - | 255 | 0.24 | - | 255 | 0.008 | - | 255 |

## 16.2 USART Asynchronous Mode

In this mode, the USART uses standard non-return-to-zero (NRZ) format (one START bit, eight or nine data bits and one STOP bit). The most common data format is 8-bits. An on-chip dedicated 8-bit baud rate generator can be used to derive standard baud rate frequencies from the oscillator. The USART transmits and receives the LSb first. The USART's transmitter and receiver are functionally independent, but use the same data format and baud rate. The baud rate generator produces a clock, either x16 or x64 of the bit shift rate, depending on bit BRGH (TXSTA<2>). Parity is not supported by the hardware, but can be implemented in software (and stored as the ninth data bit). Asynchronous mode is stopped during SLEEP.

Asynchronous mode is selected by clearing bit SYNC (TXSTA<4>).

The USART Asynchronous module consists of the following important elements:

- Baud Rate Generator
- Sampling Circuit
- Asynchronous Transmitter
- Asynchronous Receiver

### 16.2.1 USART ASYNCHRONOUS TRANSMITTER

The USART transmitter block diagram is shown in Figure 16-1. The heart of the transmitter is the Transmit (serial) Shift Register (TSR). The shift register obtains its data from the read/write transmit buffer, TXREG. The TXREG register is loaded with data in software. The TSR register is not loaded until the STOP bit has been transmitted from the previous load. As soon as the STOP bit is transmitted, the TSR is loaded with new data from the TXREG register (if available). Once the TXREG register transfers the data to the TSR register (occurs in one TCY), the TXREG register is empty and flag bit TXIF (PIR1<4>) is set. This interrupt can be enabled/disabled by setting/clearing enable bit TXIE ( PIE1<4>). Flag bit TXIF will be set, regardless of the state of enable bit TXIE and cannot be cleared in software. It will reset only when new data is loaded into the TXREG register. While flag bit TXIF indicated the status of the TXREG register, another bit, TRMT (TXSTA<1>), shows the status of the TSR register. Status bit TRMT is a read-only bit, which is set when the TSR register is empty. No interrupt logic is tied to this bit, so the user has to poll this bit in order to determine if the TSR register is empty.

> **Note 1:** The TSR register is not mapped in data memory, so it is not available to the user.
>
> **2:** Flag bit TXIF is set when enable bit TXEN is set.

To set up an asynchronous transmission:

1. Initialize the SPBRG register for the appropriate baud rate. If a high speed baud rate is desired, set bit BRGH (Section 16.1).
2. Enable the asynchronous serial port by clearing bit SYNC and setting bit SPEN.
3. If interrupts are desired, set enable bit TXIE.
4. If 9-bit transmission is desired, set transmit bit TX9. Can be used as address/data bit.
5. Enable the transmission by setting bit TXEN, which will also set bit TXIF.
6. If 9-bit transmission is selected, the ninth bit should be loaded in bit TX9D.
7. Load data to the TXREG register (starts transmission).

> **Note:** TXIF is not cleared immediately upon loading data into the transmit buffer TXREG. The flag bit becomes valid in the second instruction cycle following the load instruction.

**FIGURE 16-1: USART TRANSMIT BLOCK DIAGRAM**

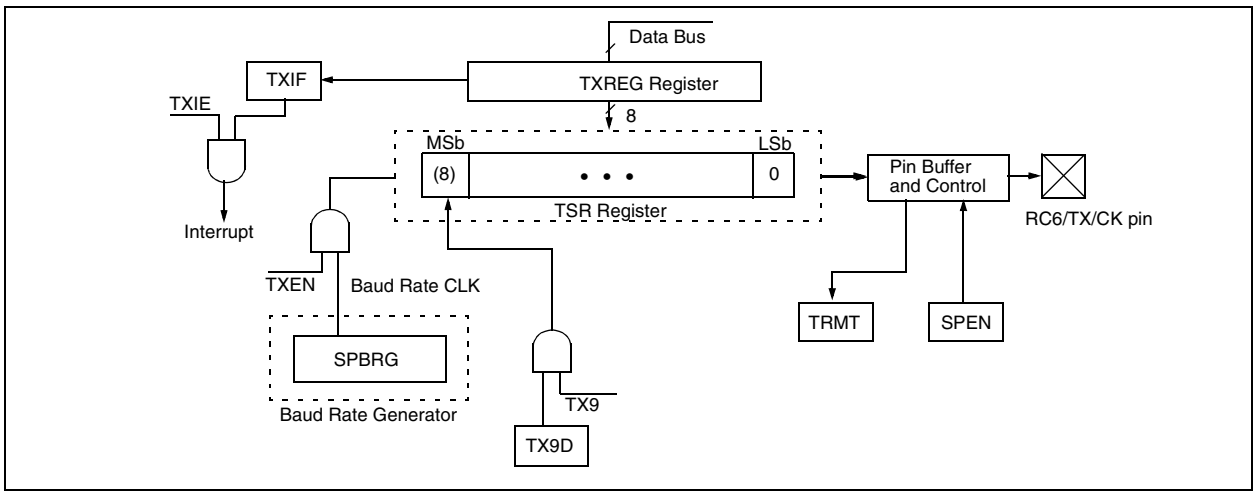



© 2006 Microchip Technology Inc.

**FIGURE 16-2: ASYNCHRONOUS TRANSMISSION**

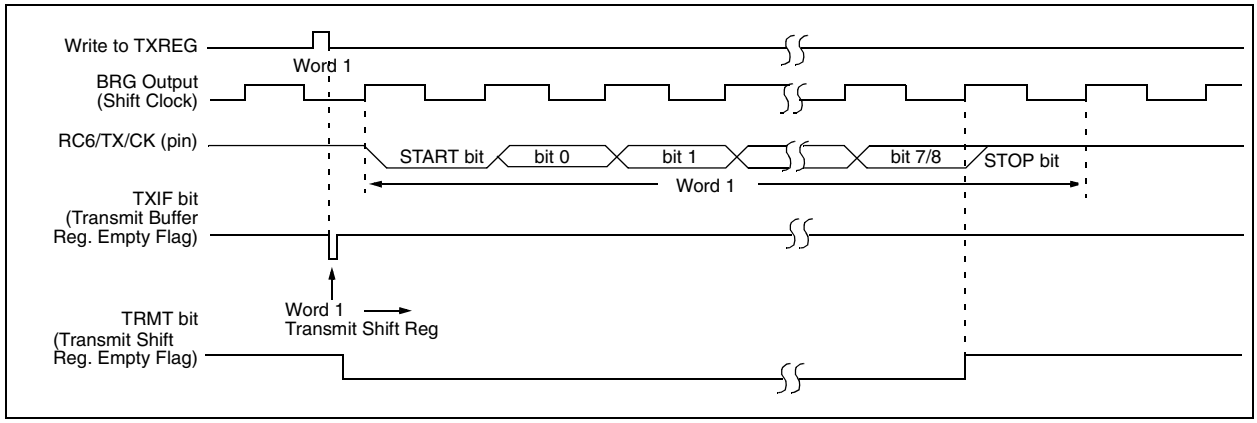


**FIGURE 16-3: ASYNCHRONOUS TRANSMISSION (BACK TO BACK)**

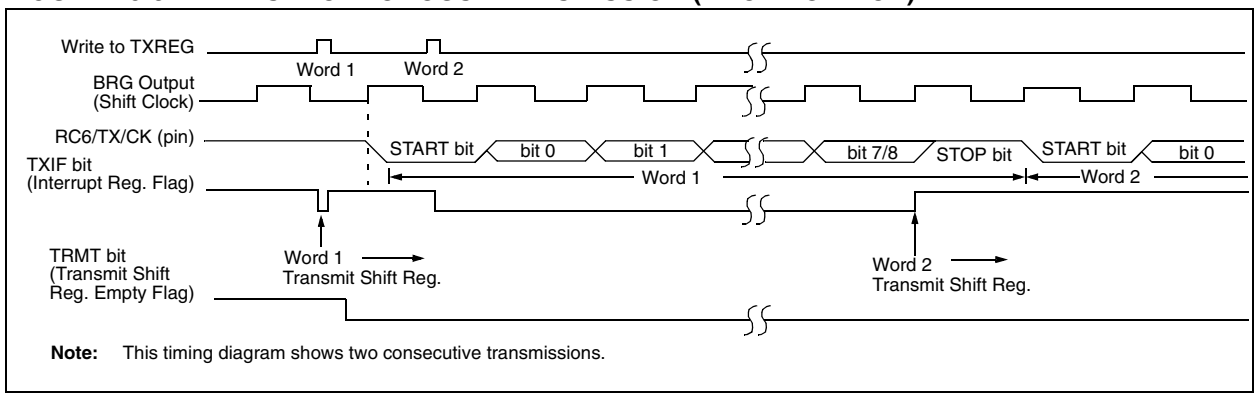


**Note:** This timing diagram shows two consecutive transmissions.

**TABLE 16-6: REGISTERS ASSOCIATED WITH ASYNCHRONOUS TRANSMISSION**

| Name | Bit 7 | Bit 6 | Bit 5 | Bit 4 | Bit 3 | Bit 2 | Bit 1 | Bit 0 | Value on POR, BOR | Value on All Other RESETS |
|---|---|---|---|---|---|---|---|---|---|---|
| INTCON | GIE/GIEH | PEIE/GIEL | TMR0IE | INT0IE | RBIE | TMR0IF | INT0IF | RBIF | 0000 000x | 0000 000u |
| PIR1 | PSPIF(1) | ADIF | RCIF | TXIF | SSPIF | CCP1IF | TMR2IF | TMR1IF | 0000 0000 | 0000 0000 |
| PIE1 | PSPIE(1) | ADIE | RCIE | TXIE | SSPIE | CCP1IE | TMR2IE | TMR1IE | 0000 0000 | 0000 0000 |
| IPR1 | PSPIP(1) | ADIP | RCIP | TXIP | SSPIP | CCP1IP | TMR2IP | TMR1IP | 0000 0000 | 0000 0000 |
| RCSTA | SPEN | RX9 | SREN | CREN | ADDEN | FERR | OERR | RX9D | 0000 -00x | 0000 -00x |
| TXREG | USART Transmit Register | | | | | | | | 0000 0000 | 0000 0000 |
| TXSTA | CSRC | TX9 | TXEN | SYNC | — | BRGH | TRMT | TX9D | 0000 -010 | 0000 -010 |
| SPBRG | Baud Rate Generator Register | | | | | | | | 0000 0000 | 0000 0000 |

Legend: x = unknown, - = unimplemented locations read as '0'.
Shaded cells are not used for Asynchronous Transmission.

**Note 1:** The PSPIF, PSPIE and PSPIP bits are reserved on the PIC18F2X2 devices; always maintain these bits clear.

### 16.2.2 USART ASYNCHRONOUS RECEIVER

The receiver block diagram is shown in Figure 16-4. The data is received on the RC7/RX/DT pin and drives the data recovery block. The data recovery block is actually a high speed shifter operating at x16 times the baud rate, whereas the main receive serial shifter operates at the bit rate or at FOSC. This mode would typically be used in RS-232 systems.

To set up an Asynchronous Reception:

1. Initialize the SPBRG register for the appropriate baud rate. If a high speed baud rate is desired, set bit BRGH (Section 16.1).
2. Enable the asynchronous serial port by clearing bit SYNC and setting bit SPEN.
3. If interrupts are desired, set enable bit RCIE.
4. If 9-bit reception is desired, set bit RX9.
5. Enable the reception by setting bit CREN.
6. Flag bit RCIF will be set when reception is complete and an interrupt will be generated if enable bit RCIE was set.
7. Read the RCSTA register to get the ninth bit (if enabled) and determine if any error occurred during reception.
8. Read the 8-bit received data by reading the RCREG register.
9. If any error occurred, clear the error by clearing enable bit CREN.
10. If using interrupts, ensure that the GIE and PEIE bits in the INTCON register (INTCON<7:6>) are set.

### 16.2.3 SETTING UP 9-BIT MODE WITH ADDRESS DETECT

This mode would typically be used in RS-485 systems. To set up an Asynchronous Reception with Address Detect Enable:

1. Initialize the SPBRG register for the appropriate baud rate. If a high speed baud rate is required, set the BRGH bit.
2. Enable the asynchronous serial port by clearing the SYNC bit and setting the SPEN bit.
3. If interrupts are required, set the RCEN bit and select the desired priority level with the RCIP bit.
4. Set the RX9 bit to enable 9-bit reception.
5. Set the ADDEN bit to enable address detect.
6. Enable reception by setting the CREN bit.
7. The RCIF bit will be set when reception is complete. The interrupt will be acknowledged if the RCIE and GIE bits are set.
8. Read the RCSTA register to determine if any error occurred during reception, as well as read bit 9 of data (if applicable).
9. Read RCREG to determine if the device is being addressed.
10. If any error occurred, clear the CREN bit.
11. If the device has been addressed, clear the ADDEN bit to allow all received data into the receive buffer and interrupt the CPU.

**FIGURE 16-4: USART RECEIVE BLOCK DIAGRAM**

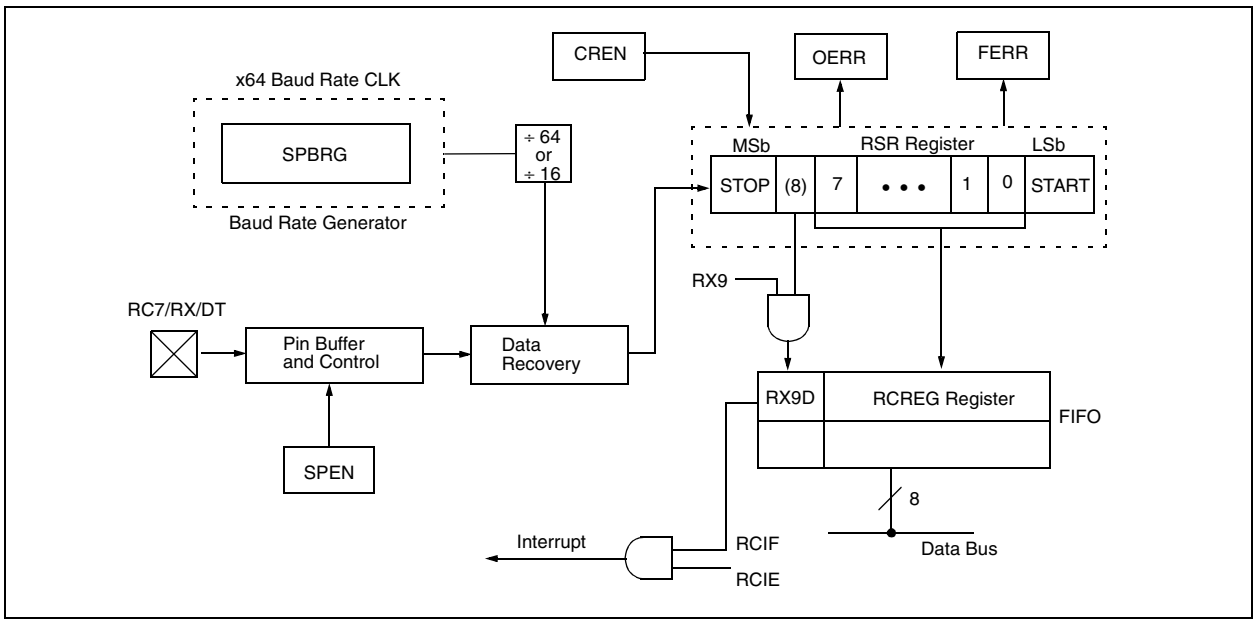



© 2006 Microchip Technology Inc.

**FIGURE 16-5: ASYNCHRONOUS RECEPTION**

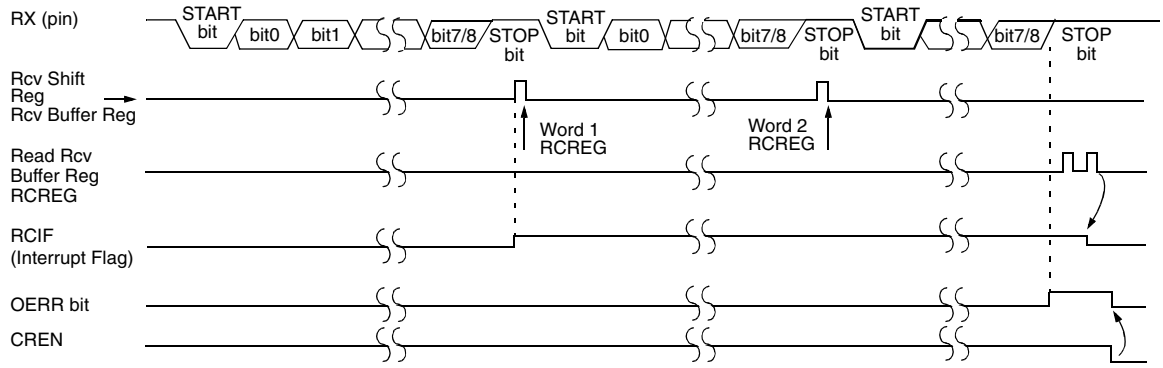


**Note:** This timing diagram shows three words appearing on the RX input. The RCREG (receive buffer) is read after the third word, causing the OERR (overrun) bit to be set.

**TABLE 16-7: REGISTERS ASSOCIATED WITH ASYNCHRONOUS RECEPTION**

| Name | Bit 7 | Bit 6 | Bit 5 | Bit 4 | Bit 3 | Bit 2 | Bit 1 | Bit 0 | Value on POR, BOR | Value on All Other RESETS |
|---|---|---|---|---|---|---|---|---|---|---|
| INTCON | GIE/GIEH | PEIE/ GIEL | TMR0IE | INT0IE | RBIE | TMR0IF | INT0IF | RBIF | 0000 000x | 0000 000u |
| PIR1 | PSPIF(1) | ADIF | RCIF | TXIF | SSPIF | CCP1IF | TMR2IF | TMR1IF | 0000 0000 | 0000 0000 |
| PIE1 | PSPIE(1) | ADIE | RCIE | TXIE | SSPIE | CCP1IE | TMR2IE | TMR1IE | 0000 0000 | 0000 0000 |
| IPR1 | PSPIP(1) | ADIP | RCIP | TXIP | SSPIP | CCP1IP | TMR2IP | TMR1IP | 0000 0000 | 0000 0000 |
| RCSTA | SPEN | RX9 | SREN | CREN | ADDEN | FERR | OERR | RX9D | 0000 -00x | 0000 -00x |
| RCREG | USART Receive Register | | | | | | | | 0000 0000 | 0000 0000 |
| TXSTA | CSRC | TX9 | TXEN | SYNC | — | BRGH | TRMT | TX9D | 0000 -010 | 0000 -010 |
| SPBRG | Baud Rate Generator Register | | | | | | | | 0000 0000 | 0000 0000 |

Legend: x = unknown, - = unimplemented locations read as '0'.
Shaded cells are not used for Asynchronous Reception.

**Note 1:** The PSPIF, PSPIE and PSPIP bits are reserved on the PIC18F2X2 devices; always maintain these bits clear.

## 16.3 USART Synchronous Master Mode

In Synchronous Master mode, the data is transmitted in a half-duplex manner (i.e., transmission and reception do not occur at the same time). When transmitting data, the reception is inhibited and vice versa. Synchronous mode is entered by setting bit SYNC (TXSTA<4>). In addition, enable bit SPEN (RCSTA<7>) is set in order to configure the RC6/TX/CK and RC7/RX/DT I/O pins to CK (clock) and DT (data) lines, respectively. The Master mode indicates that the processor transmits the master clock on the CK line. The Master mode is entered by setting bit CSRC (TXSTA<7>).

### 16.3.1 USART SYNCHRONOUS MASTER TRANSMISSION

The USART transmitter block diagram is shown in Figure 16-1. The heart of the transmitter is the Transmit (serial) Shift Register (TSR). The shift register obtains its data from the read/write transmit buffer register TXREG. The TXREG register is loaded with data in software. The TSR register is not loaded until the last bit has been transmitted from the previous load. As soon as the last bit is transmitted, the TSR is loaded with new data from the TXREG (if available). Once the TXREG register transfers the data to the TSR register (occurs in one TCYCLE), the TXREG is empty and interrupt bit TXIF (PIR1<4>) is set. The interrupt can be enabled/disabled by setting/clearing enable bit TXIE (PIE1<4>). Flag bit TXIF will be set, regardless of the state of enable bit TXIE, and cannot be cleared in software. It will reset only when new data is loaded into the TXREG register. While flag bit TXIF indicates the status of the TXREG register, another bit TRMT (TXSTA<1>) shows the status of the TSR register. TRMT is a read only bit, which is set when the TSR is empty. No interrupt logic is tied to this bit, so the user has to poll this bit in order to determine if the TSR register is empty. The TSR is not mapped in data memory, so it is not available to the user.

To set up a Synchronous Master Transmission:

1. Initialize the SPBRG register for the appropriate baud rate (Section 16.1).
2. Enable the synchronous master serial port by setting bits SYNC, SPEN, and CSRC.
3. If interrupts are desired, set enable bit TXIE.
4. If 9-bit transmission is desired, set bit TX9.
5. Enable the transmission by setting bit TXEN.
6. If 9-bit transmission is selected, the ninth bit should be loaded in bit TX9D.
7. Start transmission by loading data to the TXREG register.

**Note:** TXIF is not cleared immediately upon loading data into the transmit buffer TXREG. The flag bit becomes valid in the second instruction cycle following the load instruction.

**TABLE 16-8: REGISTERS ASSOCIATED WITH SYNCHRONOUS MASTER TRANSMISSION**

| Name | Bit 7 | Bit 6 | Bit 5 | Bit 4 | Bit 3 | Bit 2 | Bit 1 | Bit 0 | Value on POR, BOR | Value on All Other RESETS |
|---|---|---|---|---|---|---|---|---|---|---|
| INTCON | GIE/ GIEH | PEIE/ GIEL | TMR0IE | INT0IE | RBIE | TMR0IF | INT0IF | RBIF | 0000 000x | 0000 000u |
| PIR1 | PSPIF(1) | ADIF | RCIF | TXIF | SSPIF | CCP1IF | TMR2IF | TMR1IF | 0000 0000 | 0000 0000 |
| PIE1 | PSPIE(1) | ADIE | RCIE | TXIE | SSPIE | CCP1IE | TMR2IE | TMR1IE | 0000 0000 | 0000 0000 |
| IPR1 | PSPIP(1) | ADIP | RCIP | TXIP | SSPIP | CCP1IP | TMR2IP | TMR1IP | 0000 0000 | 0000 0000 |
| RCSTA | SPEN | RX9 | SREN | CREN | ADDEN | FERR | OERR | RX9D | 0000 -00x | 0000 -00x |
| TXREG | USART Transmit Register | | | | | | | | 0000 0000 | 0000 0000 |
| TXSTA | CSRC | TX9 | TXEN | SYNC | — | BRGH | TRMT | TX9D | 0000 -010 | 0000 -010 |
| SPBRG | Baud Rate Generator Register | | | | | | | | 0000 0000 | 0000 0000 |

Legend: x = unknown, - = unimplemented, read as '0'.
Shaded cells are not used for Synchronous Master Transmission.

**Note 1:** The PSPIF, PSPIE and PSPIP bits are reserved on the PIC18F2X2 devices; always maintain these bits clear.


© 2006 Microchip Technology Inc.

**FIGURE 16-6: SYNCHRONOUS TRANSMISSION**

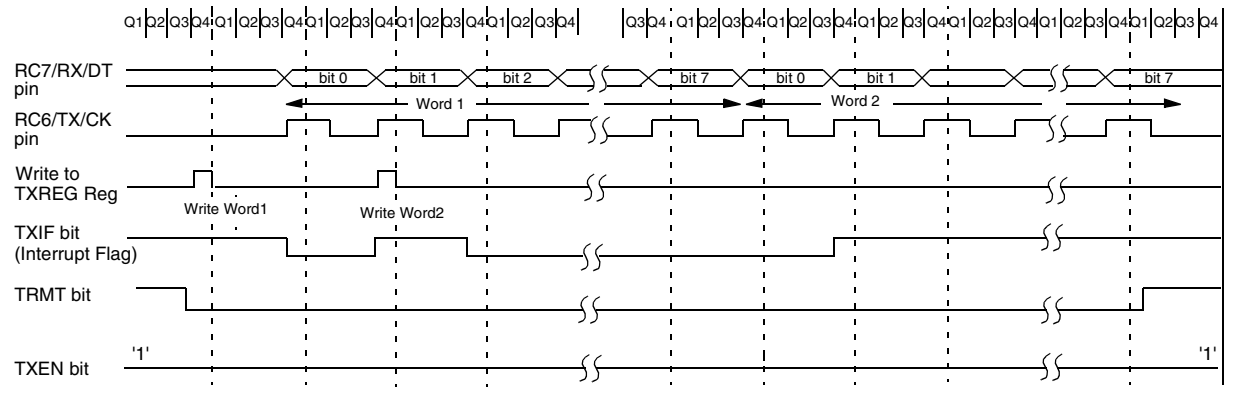


**Note:** Sync Master mode; SPBRG = '0'. Continuous transmission of two 8-bit words.

**FIGURE 16-7: SYNCHRONOUS TRANSMISSION (THROUGH TXEN)**

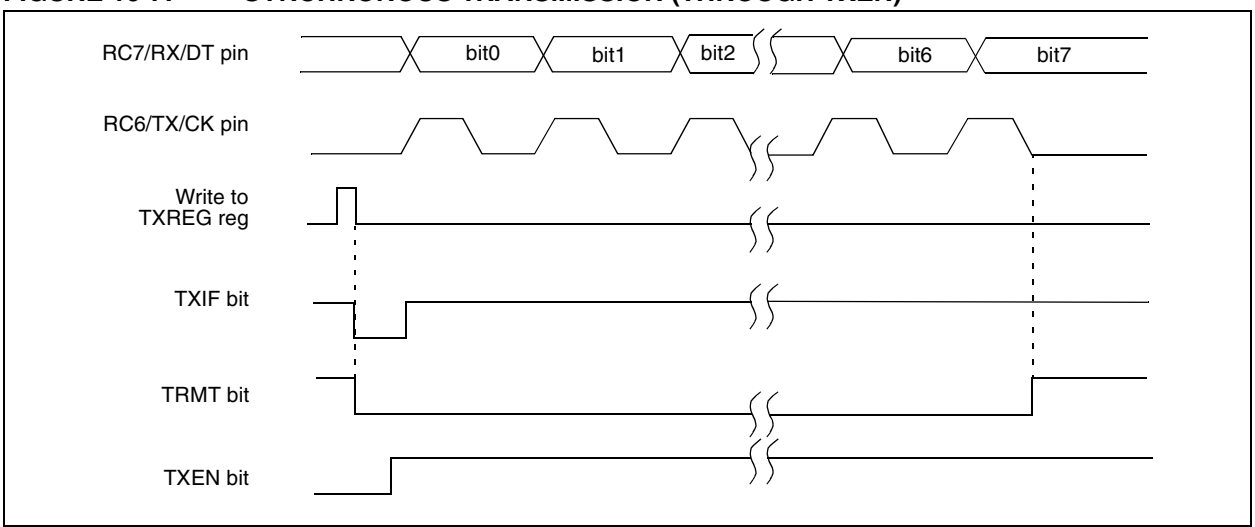

### 16.3.2 USART SYNCHRONOUS MASTER RECEPTION

Once Synchronous mode is selected, reception is enabled by setting either enable bit SREN (RCSTA<5>), or enable bit CREN (RCSTA<4>). Data is sampled on the RC7/RX/DT pin on the falling edge of the clock. If enable bit SREN is set, only a single word is received. If enable bit CREN is set, the reception is continuous until CREN is cleared. If both bits are set, then CREN takes precedence.

To set up a Synchronous Master Reception:

1. Initialize the SPBRG register for the appropriate baud rate (Section 16.1).
2. Enable the synchronous master serial port by setting bits SYNC, SPEN and CSRC.
3. Ensure bits CREN and SREN are clear.
4. If interrupts are desired, set enable bit RCIE.
5. If 9-bit reception is desired, set bit RX9.
6. If a single reception is required, set bit SREN. For continuous reception, set bit CREN.
7. Interrupt flag bit RCIF will be set when reception is complete and an interrupt will be generated if the enable bit RCIE was set.
8. Read the RCSTA register to get the ninth bit (if enabled) and determine if any error occurred during reception.
9. Read the 8-bit received data by reading the RCREG register.
10. If any error occurred, clear the error by clearing bit CREN.
11. If using interrupts, ensure that the GIE and PEIE bits in the INTCON register (INTCON<7:6>) are set.

**TABLE 16-9: REGISTERS ASSOCIATED WITH SYNCHRONOUS MASTER RECEPTION**

| Name | Bit 7 | Bit 6 | Bit 5 | Bit 4 | Bit 3 | Bit 2 | Bit 1 | Bit 0 | Value on POR, BOR | Value on All Other RESETS |
|---|---|---|---|---|---|---|---|---|---|---|
| INTCON | GIE/ GIEH | PEIE/ GIEL | TMR0IE | INT0IE | RBIE | TMR0IF | INT0IF | RBIF | 0000 000x | 0000 000u |
| PIR1 | PSPIF(1) | ADIF | RCIF | TXIF | SSPIF | CCP1IF | TMR2IF | TMR1IF | 0000 0000 | 0000 0000 |
| PIE1 | PSPIE(1) | ADIE | RCIE | TXIE | SSPIE | CCP1IE | TMR2IE | TMR1IE | 0000 0000 | 0000 0000 |
| IPR1 | PSPIP(1) | ADIP | RCIP | TXIP | SSPIP | CCP1IP | TMR2IP | TMR1IP | 0000 0000 | 0000 0000 |
| RCSTA | SPEN | RX9 | SREN | CREN | ADDEN | FERR | OERR | RX9D | 0000 -00x | 0000 -00x |
| RCREG | USART Receive Register | | | | | | | | 0000 0000 | 0000 0000 |
| TXSTA | CSRC | TX9 | TXEN | SYNC | — | BRGH | TRMT | TX9D | 0000 -010 | 0000 -010 |
| SPBRG | Baud Rate Generator Register | | | | | | | | 0000 0000 | 0000 0000 |

Legend: x = unknown, - = unimplemented, read as '0'. Shaded cells are not used for Synchronous Master Reception.
**Note 1:** The PSPIF, PSPIE and PSPIP bits are reserved on the PIC18F2X2 devices; always maintain these bits clear.

**FIGURE 16-8: SYNCHRONOUS RECEPTION (MASTER MODE, SREN)**

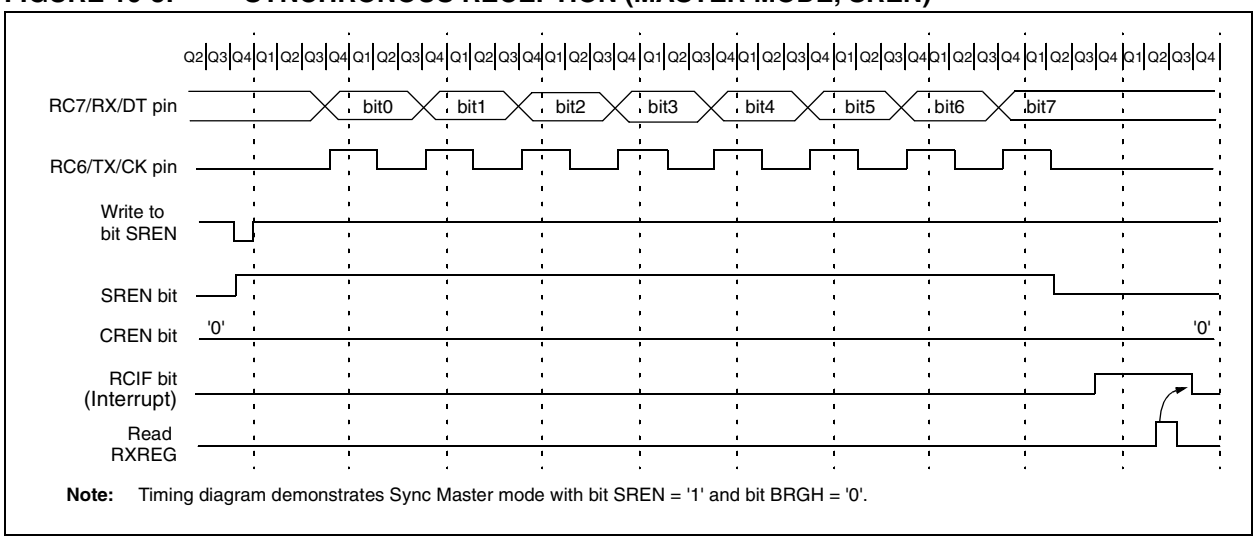


**Note:** Timing diagram demonstrates Sync Master mode with bit SREN = '1' and bit BRGH = '0'.


© 2006 Microchip Technology Inc.

## 16.4 USART Synchronous Slave Mode

Synchronous Slave mode differs from the Master mode in the fact that the shift clock is supplied externally at the RC6/TX/CK pin (instead of being supplied internally in Master mode). This allows the device to transfer or receive data while in SLEEP mode. Slave mode is entered by clearing bit CSRC (TXSTA<7>).

### 16.4.1 USART SYNCHRONOUS SLAVE TRANSMIT

The operation of the Synchronous Master and Slave modes are identical, except in the case of the SLEEP mode.

If two words are written to the TXREG and then the `SLEEP` instruction is executed, the following will occur:

a) The first word will immediately transfer to the TSR register and transmit.
b) The second word will remain in TXREG register.
c) Flag bit TXIF will not be set.
d) When the first word has been shifted out of TSR, the TXREG register will transfer the second word to the TSR and flag bit TXIF will now be set.
e) If enable bit TXIE is set, the interrupt will wake the chip from SLEEP. If the global interrupt is enabled, the program will branch to the interrupt vector.

To set up a Synchronous Slave Transmission:

1. Enable the synchronous slave serial port by setting bits SYNC and SPEN and clearing bit CSRC.
2. Clear bits CREN and SREN.
3. If interrupts are desired, set enable bit TXIE.
4. If 9-bit transmission is desired, set bit TX9.
5. Enable the transmission by setting enable bit TXEN.
6. If 9-bit transmission is selected, the ninth bit should be loaded in bit TX9D.
7. Start transmission by loading data to the TXREG register.
8. If using interrupts, ensure that the GIE and PEIE bits in the INTCON register (INTCON<7:6>) are set.

**TABLE 16-10: REGISTERS ASSOCIATED WITH SYNCHRONOUS SLAVE TRANSMISSION**

| Name | Bit 7 | Bit 6 | Bit 5 | Bit 4 | Bit 3 | Bit 2 | Bit 1 | Bit 0 | Value on POR, BOR | Value on All Other RESETS |
|---|---|---|---|---|---|---|---|---|---|---|
| INTCON | GIE/ GIEH | PEIE/ GIEL | TMR0IE | INT0IE | RBIE | TMR0IF | INT0IF | RBIF | 0000 000x | 0000 000u |
| PIR1 | PSPIF(1) | ADIF | RCIF | TXIF | SSPIF | CCP1IF | TMR2IF | TMR1IF | 0000 0000 | 0000 0000 |
| PIE1 | PSPIE(1) | ADIE | RCIE | TXIE | SSPIE | CCP1IE | TMR2IE | TMR1IE | 0000 0000 | 0000 0000 |
| IPR1 | PSPIP(1) | ADIP | RCIP | TXIP | SSPIP | CCP1IP | TMR2IP | TMR1IP | 0000 0000 | 0000 0000 |
| RCSTA | SPEN | RX9 | SREN | CREN | ADDEN | FERR | OERR | RX9D | 0000 -00x | 0000 -00x |
| TXREG | USART Transmit Register | | | | | | | | 0000 0000 | 0000 0000 |
| TXSTA | CSRC | TX9 | TXEN | SYNC | — | BRGH | TRMT | TX9D | 0000 -010 | 0000 -010 |
| SPBRG | Baud Rate Generator Register | | | | | | | | 0000 0000 | 0000 0000 |

Legend: x = unknown, - = unimplemented, read as '0'.
Shaded cells are not used for Synchronous Slave Transmission.

**Note 1:** The PSPIF, PSPIE and PSPIP bits are reserved on the PIC18F2X2 devices; always maintain these bits clear.

### 16.4.2 USART SYNCHRONOUS SLAVE RECEPTION

The operation of the Synchronous Master and Slave modes is identical, except in the case of the SLEEP mode and bit SREN, which is a “don't care” in Slave mode.

If receive is enabled by setting bit CREN prior to the `SLEEP` instruction, then a word may be received during SLEEP. On completely receiving the word, the RSR register will transfer the data to the RCREG register, and if enable bit RCIE bit is set, the interrupt generated will wake the chip from SLEEP. If the global interrupt is enabled, the program will branch to the interrupt vector.

To set up a Synchronous Slave Reception:

1. Enable the synchronous master serial port by setting bits SYNC and SPEN and clearing bit CSRC.
2. If interrupts are desired, set enable bit RCIE.
3. If 9-bit reception is desired, set bit RX9.
4. To enable reception, set enable bit CREN.
5. Flag bit RCIF will be set when reception is complete. An interrupt will be generated if enable bit RCIE was set.
6. Read the RCSTA register to get the ninth bit (if enabled) and determine if any error occurred during reception.
7. Read the 8-bit received data by reading the RCREG register.
8. If any error occurred, clear the error by clearing bit CREN.
9. If using interrupts, ensure that the GIE and PEIE bits in the INTCON register (INTCON<7:6>) are set.

**TABLE 16-11: REGISTERS ASSOCIATED WITH SYNCHRONOUS SLAVE RECEPTION**

| Name | Bit 7 | Bit 6 | Bit 5 | Bit 4 | Bit 3 | Bit 2 | Bit 1 | Bit 0 | Value on POR, BOR | Value on All Other RESETS |
|---|---|---|---|---|---|---|---|---|---|---|
| INTCON | GIE/ GIEH | PEIE/ GIEL | TMR0IE | INT0IE | RBIE | TMR0IF | INT0IF | RBIF | 0000 000x | 0000 000u |
| PIR1 | PSPIF(1) | ADIF | RCIF | TXIF | SSPIF | CCP1IF | TMR2IF | TMR1IF | 0000 0000 | 0000 0000 |
| PIE1 | PSPIE(1) | ADIE | RCIE | TXIE | SSPIE | CCP1IE | TMR2IE | TMR1IE | 0000 0000 | 0000 0000 |
| IPR1 | PSPIP(1) | ADIP | RCIP | TXIP | SSPIP | CCP1IP | TMR2IP | TMR1IP | 0000 0000 | 0000 0000 |
| RCSTA | SPEN | RX9 | SREN | CREN | ADDEN | FERR | OERR | RX9D | 0000 -00x | 0000 -00x |
| RCREG | USART Receive Register | | | | | | | | 0000 0000 | 0000 0000 |
| TXSTA | CSRC | TX9 | TXEN | SYNC | — | BRGH | TRMT | TX9D | 0000 -010 | 0000 -010 |
| SPBRG | Baud Rate Generator Register | | | | | | | | 0000 0000 | 0000 0000 |

Legend: `x` = unknown, - = unimplemented, read as '0'.
Shaded cells are not used for Synchronous Slave Reception.

**Note 1:** The PSPIF, PSPIE and PSPIP bits are reserved on the PIC18F2X2 devices; always maintain these bits clear.


© 2006 Microchip Technology Inc.

## 17.0 COMPATIBLE 10-BIT ANALOG-TO-DIGITAL CONVERTER (A/D) MODULE

The Analog-to-Digital (A/D) converter module has five inputs for the PIC18F2X2 devices and eight for the PIC18F4X2 devices. This module has the ADCON0 and ADCON1 register definitions that are compatible with the mid-range A/D module.

The A/D allows conversion of an analog input signal to a corresponding 10-bit digital number.

The A/D module has four registers. These registers are:

- A/D Result High Register (ADRESH)
- A/D Result Low Register (ADRESL)
- A/D Control Register 0 (ADCON0)
- A/D Control Register 1 (ADCON1)

The ADCON0 register, shown in Register 17-1, controls the operation of the A/D module. The ADCON1 register, shown in Register 17-2, configures the functions of the port pins.

### REGISTER 17-1: ADCON0 REGISTER

| R/W-0 | R/W-0 | R/W-0 | R/W-0 | R/W-0 | R/W-0 | U-0 | R/W-0 |
|---|---|---|---|---|---|---|---|
| ADCS1 | ADCS0 | CHS2 | CHS1 | CHS0 | GO/$\overline{\text{DONE}}$ | — | ADON |
| bit 7 | | | | | | | bit 0 |

bit 7-6 **ADCS1:ADCS0:** A/D Conversion Clock Select bits (ADCON0 bits in **bold**)

| ADCON1 <ADCS2> | ADCON0 <ADCS1:ADCS0> | Clock Conversion |
|---|---|---|
| 0 | **00** | FOSC/2 |
| 0 | **01** | FOSC/8 |
| 0 | **10** | FOSC/32 |
| 0 | **11** | FRC (clock derived from the internal A/D RC oscillator) |
| 1 | **00** | FOSC/4 |
| 1 | **01** | FOSC/16 |
| 1 | **10** | FOSC/64 |
| 1 | **11** | FRC (clock derived from the internal A/D RC oscillator) |

bit 5-3 **CHS2:CHS0:** Analog Channel Select bits
000 = channel 0, (AN0)
001 = channel 1, (AN1)
010 = channel 2, (AN2)
011 = channel 3, (AN3)
100 = channel 4, (AN4)
101 = channel 5, (AN5)
110 = channel 6, (AN6)
111 = channel 7, (AN7)

**Note:** The PIC18F2X2 devices do not implement the full 8 A/D channels; the unimplemented selections are reserved. Do not select any unimplemented channel.

bit 2 **GO/$\overline{\text{DONE}}$:** A/D Conversion Status bit
When ADON = 1:
1 = A/D conversion in progress (setting this bit starts the A/D conversion which is automatically cleared by hardware when the A/D conversion is complete)
0 = A/D conversion not in progress

bit 1 **Unimplemented:** Read as '0'

bit 0 **ADON:** A/D On bit
1 = A/D converter module is powered up
0 = A/D converter module is shut-off and consumes no operating current

| Legend: | | | |
|---|---|---|---|
| R = Readable bit | W = Writable bit | U = Unimplemented bit, read as ‘0’ | |
| - n = Value at POR | ’1’ = Bit is set | ’0’ = Bit is cleared | x = Bit is unknown |

### REGISTER 17-2: ADCON1 REGISTER

| R/W-0 | R/W-0 | U-0 | U-0 | R/W-0 | R/W-0 | R/W-0 | R/W-0 |
|---|---|---|---|---|---|---|---|
| ADFM | ADCS2 | — | — | PCFG3 | PCFG2 | PCFG1 | PCFG0 |
| bit 7 | | | | | | | bit 0 |

bit 7 **ADFM:** A/D Result Format Select bit
1 = Right justified. Six (6) Most Significant bits of ADRESH are read as ’0’.
0 = Left justified. Six (6) Least Significant bits of ADRESL are read as ’0’.

bit 6 **ADCS2:** A/D Conversion Clock Select bit (ADCON1 bits in **bold**)

| ADCON1 <ADCS2> | ADCON0 <ADCS1:ADCS0> | Clock Conversion |
|---|---|---|
| **0** | 00 | FOSC/2 |
| **0** | 01 | FOSC/8 |
| **0** | 10 | FOSC/32 |
| **0** | 11 | FRC (clock derived from the internal A/D RC oscillator) |
| **1** | 00 | FOSC/4 |
| **1** | 01 | FOSC/16 |
| **1** | 10 | FOSC/64 |
| **1** | 11 | FRC (clock derived from the internal A/D RC oscillator) |

bit 5-4 **Unimplemented:** Read as '0'

bit 3-0 **PCFG3:PCFG0:** A/D Port Configuration Control bits

| PCFG <3:0> | AN7 | AN6 | AN5 | AN4 | AN3 | AN2 | AN1 | AN0 | VREF+ | VREF- | C / R |
|---|---|---|---|---|---|---|---|---|---|---|---|
| 0000 | A | A | A | A | A | A | A | A | VDD | VSS | 8 / 0 |
| 0001 | A | A | A | A | VREF+ | A | A | A | AN3 | VSS | 7 / 1 |
| 0010 | D | D | D | A | A | A | A | A | VDD | VSS | 5 / 0 |
| 0011 | D | D | D | A | VREF+ | A | A | A | AN3 | VSS | 4 / 1 |
| 0100 | D | D | D | D | A | D | A | A | VDD | VSS | 3 / 0 |
| 0101 | D | D | D | D | VREF+ | D | A | A | AN3 | VSS | 2 / 1 |
| 011x | D | D | D | D | D | D | D | D | — | — | 0 / 0 |
| 1000 | A | A | A | A | VREF+ | VREF- | A | A | AN3 | AN2 | 6 / 2 |
| 1001 | D | D | A | A | A | A | A | A | VDD | VSS | 6 / 0 |
| 1010 | D | D | A | A | VREF+ | A | A | A | AN3 | VSS | 5 / 1 |
| 1011 | D | D | A | A | VREF+ | VREF- | A | A | AN3 | AN2 | 4 / 2 |
| 1100 | D | D | D | A | VREF+ | VREF- | A | A | AN3 | AN2 | 3 / 2 |
| 1101 | D | D | D | D | VREF+ | VREF- | A | A | AN3 | AN2 | 2 / 2 |
| 1110 | D | D | D | D | D | D | D | A | VDD | VSS | 1 / 0 |
| 1111 | D | D | D | D | VREF+ | VREF- | D | A | AN3 | AN2 | 1 / 2 |

A = Analog input D = Digital I/O
C/R = # of analog input channels / # of A/D voltage references

| Legend: | | | |
|---|---|---|---|
| R = Readable bit | W = Writable bit | U = Unimplemented bit, read as ‘0’ | |
| - n = Value at POR | ’1’ = Bit is set | ’0’ = Bit is cleared | x = Bit is unknown |

**Note:** On any device RESET, the port pins that are multiplexed with analog functions (ANx) are forced to be an analog input.


© 2006 Microchip Technology Inc.

The analog reference voltage is software selectable to either the device's positive and negative supply voltage ($V_{DD}$ and $V_{SS}$), or the voltage level on the RA3/AN3/$V_{REF+}$ pin and RA2/AN2/$V_{REF-}$ pin.

The A/D converter has a unique feature of being able to operate while the device is in SLEEP mode. To operate in SLEEP, the A/D conversion clock must be derived from the A/D's internal RC oscillator.

The output of the sample and hold is the input into the converter, which generates the result via successive approximation.

A device RESET forces all registers to their RESET state. This forces the A/D module to be turned off and any conversion is aborted.

Each port pin associated with the A/D converter can be configured as an analog input (RA3 can also be a voltage reference) or as a digital I/O.

The ADRESH and ADRESL registers contain the result of the A/D conversion. When the A/D conversion is complete, the result is loaded into the ADRESH/ADRESL registers, the GO/$\overline{\text{DONE}}$ bit (ADCON0<2>) is cleared, and A/D interrupt flag bit, ADIF is set. The block diagram of the A/D module is shown in Figure 17-1.

**FIGURE 17-1: A/D BLOCK DIAGRAM**

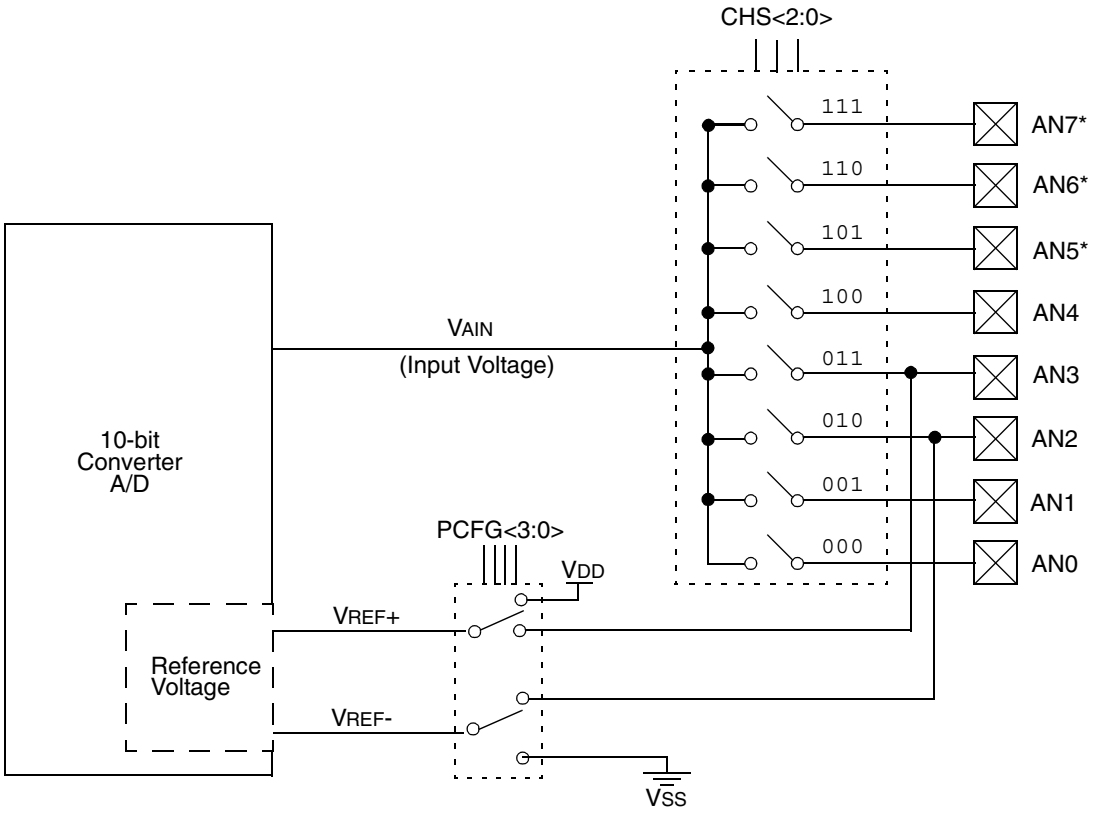


* These channels are implemented only on the PIC18F4X2 devices.

The value that is in the ADRESH/ADRESL registers is not modified for a Power-on Reset. The ADRESH/ADRESL registers will contain unknown data after a Power-on Reset.

After the A/D module has been configured as desired, the selected channel must be acquired before the conversion is started. The analog input channels must have their corresponding TRIS bits selected as an input. To determine acquisition time, see Section 17.1. After this acquisition time has elapsed, the A/D conversion can be started. The following steps should be followed for doing an A/D conversion:

1. Configure the A/D module:
   - Configure analog pins, voltage reference and digital I/O (ADCON1)
   - Select A/D input channel (ADCON0)
   - Select A/D conversion clock (ADCON0)
   - Turn on A/D module (ADCON0)
2. Configure A/D interrupt (if desired):
   - Clear ADIF bit
   - Set ADIE bit
   - Set GIE bit
   - Set PEIE bit
3. Wait the required acquisition time.
4. Start conversion:
   - Set GO/$\overline{\text{DONE}}$ bit (ADCON0)
5. Wait for A/D conversion to complete, by either:
   - Polling for the GO/$\overline{\text{DONE}}$ bit to be cleared (interrupts disabled)

   OR
   - Waiting for the A/D interrupt
6. Read A/D Result registers (ADRESH/ADRESL); clear bit ADIF if required.
7. For next conversion, go to step 1 or step 2 as required. The A/D conversion time per bit is defined as TAD. A minimum wait of 2 TAD is required before the next acquisition starts.

## 17.1 A/D Acquisition Requirements

For the A/D converter to meet its specified accuracy, the charge holding capacitor (CHOLD) must be allowed to fully charge to the input channel voltage level. The analog input model is shown in Figure 17-2. The source impedance (RS) and the internal sampling switch (RSS) impedance directly affect the time required to charge the capacitor CHOLD. The sampling switch (RSS) impedance varies over the device voltage (VDD). The source impedance affects the offset voltage at the analog input (due to pin leakage current). **The maximum recommended impedance for analog sources is 2.5 kΩ.** After the analog input channel is selected (changed), this acquisition must be done before the conversion can be started.

| **Note:** | When the conversion is started, the holding capacitor is disconnected from the input pin. |
|---|---|

**FIGURE 17-2: ANALOG INPUT MODEL**

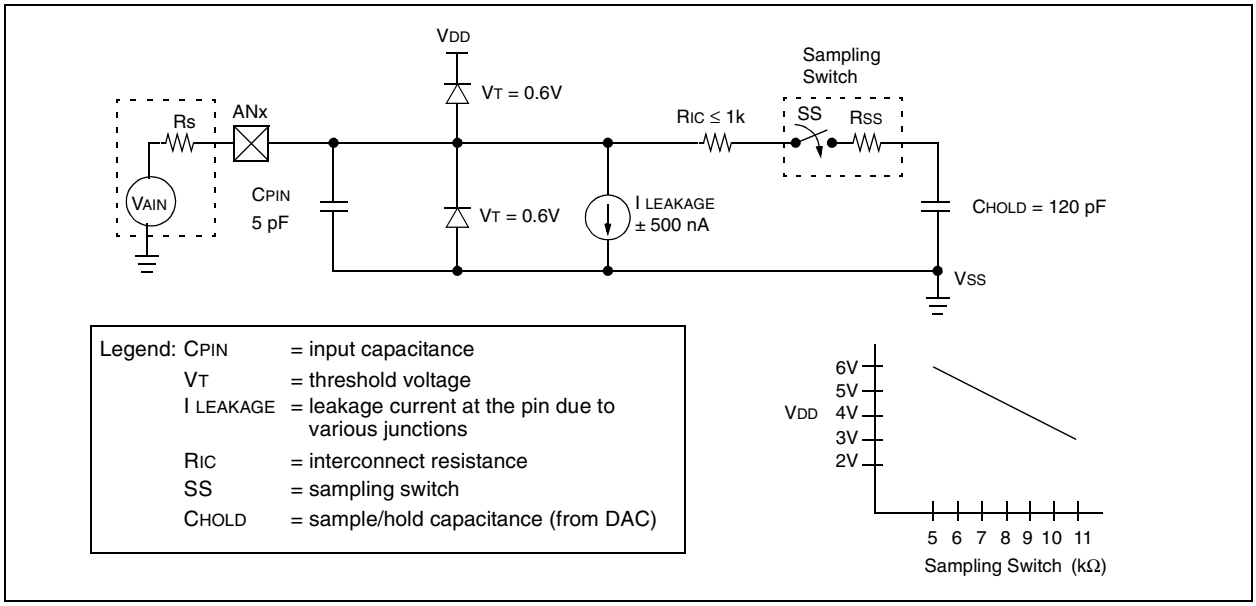



© 2006 Microchip Technology Inc.

To calculate the minimum acquisition time, Equation 17-1 may be used. This equation assumes that 1/2 LSb error is used (1024 steps for the A/D). The 1/2 LSb error is the maximum error allowed for the A/D to meet its specified resolution.

### EQUATION 17-1: ACQUISITION TIME

$$T_{ACQ} = \text{Amplifier Settling Time} + \text{Holding Capacitor Charging Time} + \text{Temperature Coefficient}$$
$$= T_{AMP} + T_C + T_{COFF}$$

### EQUATION 17-2: A/D MINIMUM CHARGING TIME

$$V_{HOLD} = (V_{REF} - (V_{REF}/2048)) \cdot (1 - e^{(-T_C/C_{HOLD}(R_{IC} + R_{SS} + R_S))})$$

or

$$T_C = -(120\text{ pF})(1\text{ k}\Omega + R_{SS} + R_S)\ln(1/2048)$$

Example 17-1 shows the calculation of the minimum required acquisition time, $T_{ACQ}$. This calculation is based on the following application system assumptions:

- $C_{HOLD}$ = 120 pF
- Rs = 2.5 kΩ
- Conversion Error ≤ 1/2 LSb
- $V_{DD}$ = 5V → Rss = 7 kΩ
- Temperature = 50°C (system max.)
- $V_{HOLD}$ = 0V @ time = 0

### EXAMPLE 17-1: CALCULATING THE MINIMUM REQUIRED ACQUISITION TIME

$$T_{ACQ} = T_{AMP} + T_C + T_{COFF}$$

Temperature coefficient is only required for temperatures > 25°C.

$$T_{ACQ} = 2\ \mu s + T_C + [(\text{Temp} - 25°C)(0.05\ \mu s/°C)]$$

$$T_C = -C_{HOLD}(R_{IC} + R_{SS} + R_S)\ln(1/2048)$$
$$-120\text{ pF}(1\text{ k}\Omega + 7\text{ k}\Omega + 2.5\text{ k}\Omega)\ln(0.0004883)$$
$$-120\text{ pF}(10.5\text{ k}\Omega)\ln(0.0004883)$$
$$-1.26\ \mu s(-7.6246)$$
$$9.61\ \mu s$$

$$T_{ACQ} = 2\ \mu s + 9.61\ \mu s + [(50°C - 25°C)(0.05\ \mu s/°C)]$$
$$11.61\ \mu s + 1.25\ \mu s$$
$$12.86\ \mu s$$

## 17.2 Selecting the A/D Conversion Clock

The A/D conversion time per bit is defined as TAD. The A/D conversion requires 12 TAD per 10-bit conversion. The source of the A/D conversion clock is software selectable. The seven possible options for TAD are:

- 2 TOSC
- 4 TOSC
- 8 TOSC
- 16 TOSC
- 32 TOSC
- 64 TOSC
- Internal A/D module RC oscillator (2-6 µs)

For correct A/D conversions, the A/D conversion clock (TAD) must be selected to ensure a minimum TAD time of 1.6 µs.

Table 17-1 shows the resultant TAD times derived from the device operating frequencies and the A/D clock source selected.

## 17.3 Configuring Analog Port Pins

The ADCON1, TRISA and TRISE registers control the operation of the A/D port pins. The port pins that are desired as analog inputs, must have their corresponding TRIS bits set (input). If the TRIS bit is cleared (output), the digital output level (VOH or VOL) will be converted.

The A/D operation is independent of the state of the CHS2:CHS0 bits and the TRIS bits.

**Note 1:** When reading the port register, all pins configured as analog input channels will read as cleared (a low level). Pins configured as digital inputs will convert an analog input. Analog levels on a digitally configured input will not affect the conversion accuracy.

**2:** Analog levels on any pin that is defined as a digital input (including the AN4:AN0 pins) may cause the input buffer to consume current that is out of the device's specification.

**TABLE 17-1: TAD vs. DEVICE OPERATING FREQUENCIES**

| AD Clock Source (TAD) | | Maximum Device Frequency | |
|---|---|---|---|
| **Operation** | **ADCS2:ADCS0** | **PIC18FXX2** | **PIC18LFXX2** |
| 2 TOSC | 000 | 1.25 MHz | 666 kHz |
| 4 TOSC | 100 | 2.50 MHz | 1.33 MHz |
| 8 TOSC | 001 | 5.00 MHz | 2.67 MHz |
| 16 TOSC | 101 | 10.00 MHz | 5.33 MHz |
| 32 TOSC | 010 | 20.00 MHz | 10.67 MHz |
| 64 TOSC | 110 | 40.00 MHz | 21.33 MHz |
| RC | 011 | — | — |


© 2006 Microchip Technology Inc.

## 17.4 A/D Conversions

Figure 17-3 shows the operation of the A/D converter after the GO bit has been set. Clearing the GO/$\overline{\text{DONE}}$ bit during a conversion will abort the current conversion. The A/D result register pair will NOT be updated with the partially completed A/D conversion sample. That is, the ADRESH:ADRESL registers will continue to contain the value of the last completed conversion (or the last value written to the ADRESH:ADRESL registers). After the A/D conversion is aborted, a 2 TAD wait is required before the next acquisition is started. After this 2 TAD wait, acquisition on the selected channel is automatically started. The GO/$\overline{\text{DONE}}$ bit can then be set to start the conversion.

> **Note:** The GO/$\overline{\text{DONE}}$ bit should **NOT** be set in the same instruction that turns on the A/D.

**FIGURE 17-3: A/D CONVERSION TAD CYCLES**

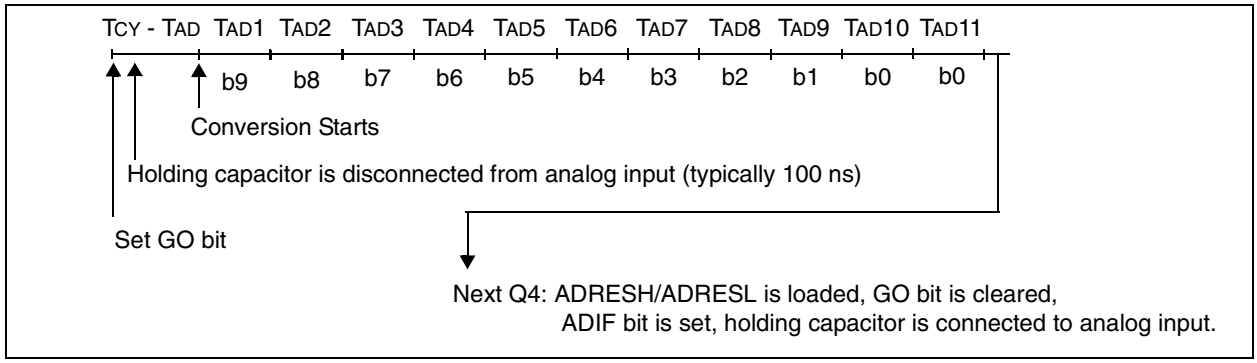


### 17.4.1 A/D RESULT REGISTERS

The ADRESH:ADRESL register pair is the location where the 10-bit A/D result is loaded at the completion of the A/D conversion. This register pair is 16-bits wide. The A/D module gives the flexibility to left or right justify the 10-bit result in the 16-bit result register. The A/D Format Select bit (ADFM) controls this justification. Figure 17-4 shows the operation of the A/D result justification. The extra bits are loaded with '0's. When an A/D result will not overwrite these locations (A/D disable), these registers may be used as two general purpose 8-bit registers.

**FIGURE 17-4: A/D RESULT JUSTIFICATION**

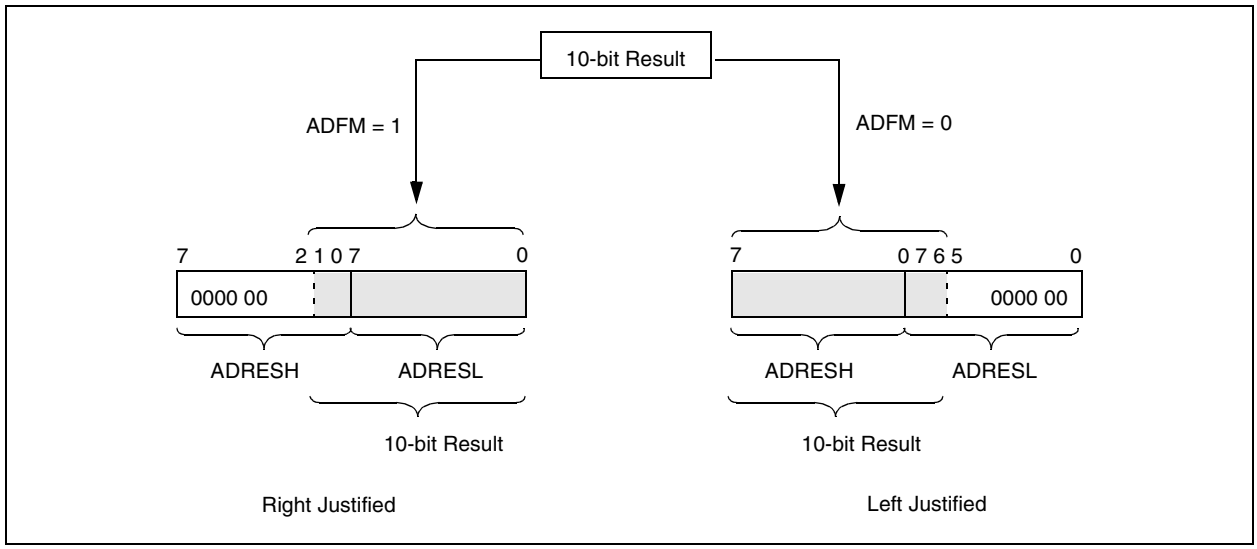

## 17.5 Use of the CCP2 Trigger

An A/D conversion can be started by the “special event trigger” of the CCP2 module. This requires that the CCP2M3:CCP2M0 bits (CCP2CON<3:0>) be programmed as 1011 and that the A/D module is enabled (ADON bit is set). When the trigger occurs, the GO/$\overline{\text{DONE}}$ bit will be set, starting the A/D conversion, and the Timer1 (or Timer3) counter will be reset to zero. Timer1 (or Timer3) is reset to automatically repeat the A/D acquisition period with minimal software overhead (moving ADRESH/ADRESL to the desired location). The appropriate analog input channel must be selected and the minimum acquisition done before the “special event trigger” sets the GO/$\overline{\text{DONE}}$ bit (starts a conversion).

If the A/D module is not enabled (ADON is cleared), the “special event trigger” will be ignored by the A/D module, but will still reset the Timer1 (or Timer3) counter.

**TABLE 17-2: SUMMARY OF A/D REGISTERS**

| Name | Bit 7 | Bit 6 | Bit 5 | Bit 4 | Bit 3 | Bit 2 | Bit 1 | Bit 0 | Value on POR, BOR | Value on All Other RESETS |
|---|---|---|---|---|---|---|---|---|---|---|
| INTCON | GIE/ GIEH | PEIE/ GIEL | TMR0IE | INT0IE | RBIE | TMR0IF | INT0IF | RBIF | 0000 000x | 0000 000u |
| PIR1 | PSPIF(1) | ADIF | RCIF | TXIF | SSPIF | CCP1IF | TMR2IF | TMR1IF | 0000 0000 | 0000 0000 |
| PIE1 | PSPIE(1) | ADIE | RCIE | TXIE | SSPIE | CCP1IE | TMR2IE | TMR1IE | 0000 0000 | 0000 0000 |
| IPR1 | PSPIP(1) | ADIP | RCIP | TXIP | SSPIP | CCP1IP | TMR2IP | TMR1IP | 0000 0000 | 0000 0000 |
| PIR2 | — | — | — | EEIF | BCLIF | LVDIF | TMR3IF | CCP2IF | ---0 0000 | ---0 0000 |
| PIE2 | — | — | — | EEIE | BCLIE | LVDIE | TMR3IE | CCP2IE | ---0 0000 | ---0 0000 |
| IPR2 | — | — | — | EEIP | BCLIP | LVDIP | TMR3IP | CCP2IP | ---1 1111 | ---1 0000 |
| ADRESH | A/D Result Register | | | | | | | | xxxx xxxx | uuuu uuuu |
| ADRESL | A/D Result Register | | | | | | | | xxxx xxxx | uuuu uuuu |
| ADCON0 | ADCS1 | ADCS0 | CHS2 | CHS1 | CHS0 | GO/$\overline{\text{DONE}}$ | — | ADON | 0000 00-0 | 0000 00-0 |
| ADCON1 | ADFM | ADCS2 | — | — | PCFG3 | PCFG2 | PCFG1 | PCFG0 | ---- -000 | ---- -000 |
| PORTA | — | RA6 | RA5 | RA4 | RA3 | RA2 | RA1 | RA0 | --0x 0000 | --0u 0000 |
| TRISA | — | PORTA Data Direction Register | | | | | | | --11 1111 | --11 1111 |
| PORTE | — | — | — | — | — | RE2 | RE1 | RE0 | ---- -000 | ---- -000 |
| LATE | — | — | — | — | — | LATE2 | LATE1 | LATE0 | ---- -xxx | ---- -uuu |
| TRISE | IBF | OBF | IBOV | PSPMODE | — | PORTE Data Direction bits | | | 0000 -111 | 0000 -111 |

Legend: x = unknown, u = unchanged, - = unimplemented, read as '0'. Shaded cells are not used for A/D conversion.

**Note 1:** The PSPIF, PSPIE and PSPIP bits are reserved on the PIC18F2X2 devices; always maintain these bits clear.


© 2006 Microchip Technology Inc.

## 18.0 LOW VOLTAGE DETECT

In many applications, the ability to determine if the device voltage ($V_{DD}$) is below a specified voltage level is a desirable feature. A window of operation for the application can be created, where the application software can do “housekeeping tasks” before the device voltage exits the valid operating range. This can be done using the Low Voltage Detect module.

This module is a software programmable circuitry, where a device voltage trip point can be specified. When the voltage of the device becomes lower then the specified point, an interrupt flag is set. If the interrupt is enabled, the program execution will branch to the interrupt vector address and the software can then respond to that interrupt source.

The Low Voltage Detect circuitry is completely under software control. This allows the circuitry to be “turned off” by the software, which minimizes the current consumption for the device.

Figure 18-1 shows a possible application voltage curve (typically for batteries). Over time, the device voltage decreases. When the device voltage equals voltage $V_A$, the LVD logic generates an interrupt. This occurs at time $T_A$. The application software then has the time, until the device voltage is no longer in valid operating range, to shutdown the system. Voltage point $V_B$ is the minimum valid operating voltage specification. This occurs at time $T_B$. The difference $T_B$ - $T_A$ is the total time for shutdown.

**FIGURE 18-1: TYPICAL LOW VOLTAGE DETECT APPLICATION**

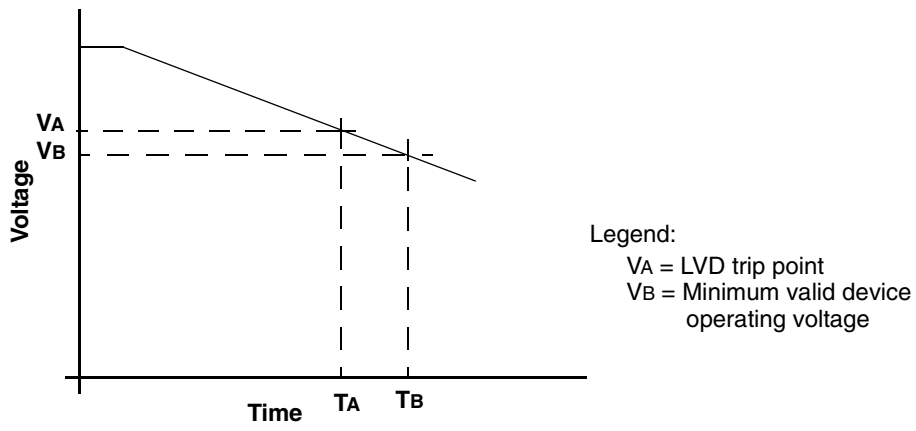


The block diagram for the LVD module is shown in Figure 18-2. A comparator uses an internally generated reference voltage as the set point. When the selected tap output of the device voltage crosses the set point (is lower than), the LVDIF bit is set.

Each node in the resistor divider represents a “trip point” voltage. The “trip point” voltage is the minimum supply voltage level at which the device can operate before the LVD module asserts an interrupt. When the supply voltage is equal to the trip point, the voltage tapped off of the resistor array is equal to the 1.2V internal reference voltage generated by the voltage reference module. The comparator then generates an interrupt signal setting the LVDIF bit. This voltage is software programmable to any one of 16 values (see Figure 18-2). The trip point is selected by programming the LVDL3:LVDL0 bits (LVDCON<3:0>).

**FIGURE 18-2: LOW VOLTAGE DETECT (LVD) BLOCK DIAGRAM**

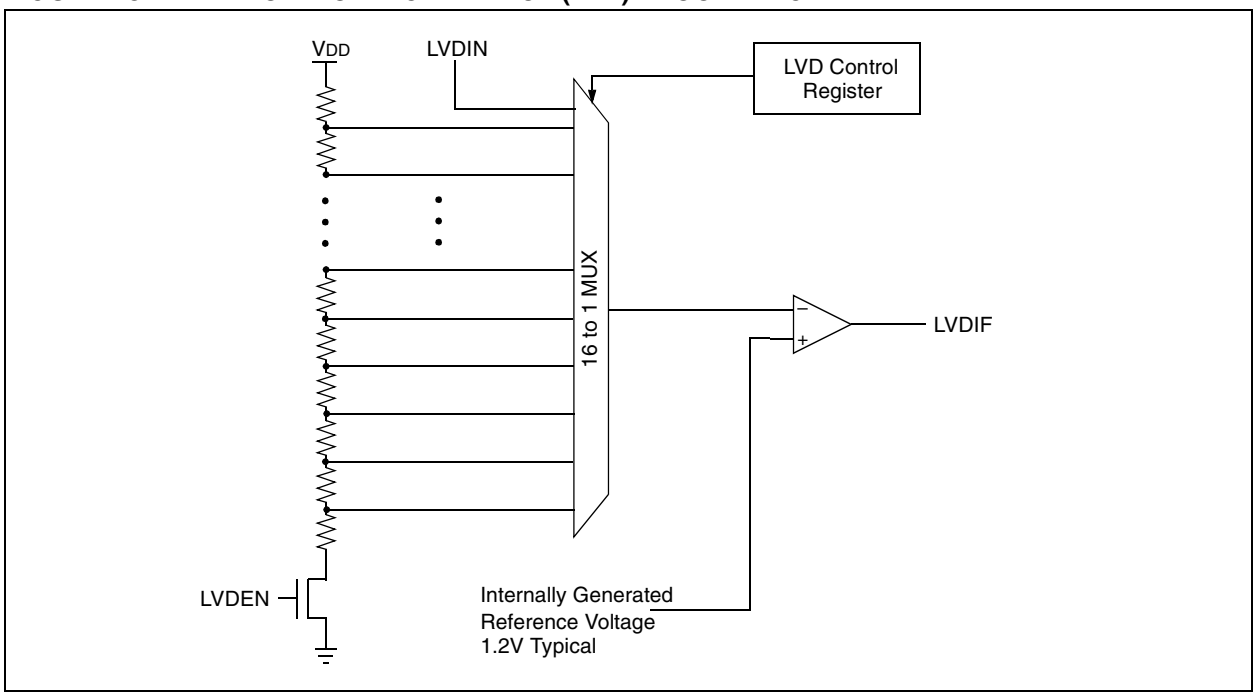


The LVD module has an additional feature that allows the user to supply the trip voltage to the module from an external source. This mode is enabled when bits LVDL3:LVDL0 are set to `1111`. In this state, the comparator input is multiplexed from the external input pin, LVDIN (Figure 18-3). This gives users flexibility, because it allows them to configure the Low Voltage Detect interrupt to occur at any voltage in the valid operating range.

**FIGURE 18-3: LOW VOLTAGE DETECT (LVD) WITH EXTERNAL INPUT BLOCK DIAGRAM**

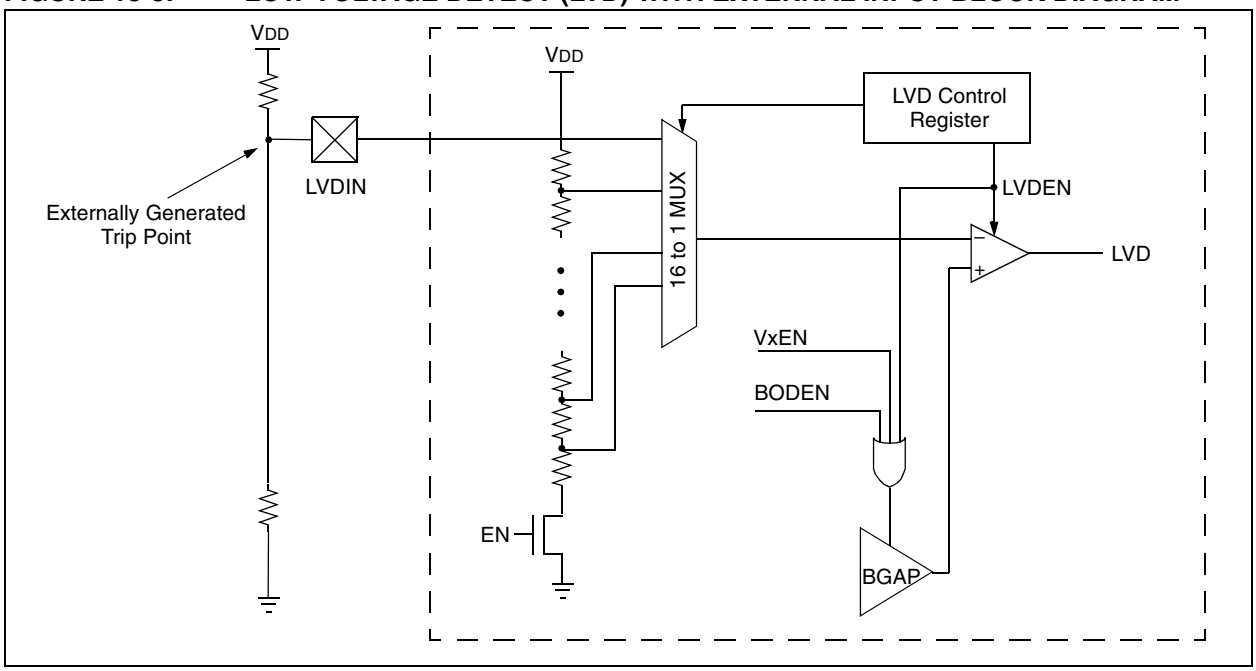



© 2006 Microchip Technology Inc.

## 18.1 Control Register

The Low Voltage Detect Control register controls the operation of the Low Voltage Detect circuitry.

**REGISTER 18-1: LVDCON REGISTER**

| U-0 | U-0 | R-0 | R/W-0 | R/W-0 | R/W-1 | R/W-0 | R/W-1 |
|---|---|---|---|---|---|---|---|
| — | — | IRVST | LVDEN | LVDL3 | LVDL2 | LVDL1 | LVDL0 |
| bit 7 | | | | | | | bit 0 |

bit 7-6 **Unimplemented:** Read as '0'

bit 5 **IRVST:** Internal Reference Voltage Stable Flag bit
1 = Indicates that the Low Voltage Detect logic will generate the interrupt flag at the specified voltage range
0 = Indicates that the Low Voltage Detect logic will not generate the interrupt flag at the specified voltage range and the LVD interrupt should not be enabled

bit 4 **LVDEN:** Low Voltage Detect Power Enable bit
1 = Enables LVD, powers up LVD circuit
0 = Disables LVD, powers down LVD circuit

bit 3-0 **LVDL3:LVDL0:** Low Voltage Detection Limit bits
1111 = External analog input is used (input comes from the LVDIN pin)
1110 = 4.5V - 4.77V
1101 = 4.2V - 4.45V
1100 = 4.0V - 4.24V
1011 = 3.8V - 4.03V
1010 = 3.6V - 3.82V
1001 = 3.5V - 3.71V
1000 = 3.3V - 3.50V
0111 = 3.0V - 3.18V
0110 = 2.8V - 2.97V
0101 = 2.7V - 2.86V
0100 = 2.5V - 2.65V
0011 = 2.4V - 2.54V
0010 = 2.2V - 2.33V
0001 = 2.0V - 2.12V
0000 = Reserved

**Note:** LVDL3:LVDL0 modes which result in a trip point below the valid operating voltage of the device are not tested.

| Legend: | | | |
|---|---|---|---|
| R = Readable bit | W = Writable bit | U = Unimplemented bit, read as ‘0’ | |
| - n = Value at POR | ’1’ = Bit is set | ’0’ = Bit is cleared | x = Bit is unknown |

## 18.2 Operation

Depending on the power source for the device voltage, the voltage normally decreases relatively slowly. This means that the LVD module does not need to be constantly operating. To decrease the current requirements, the LVD circuitry only needs to be enabled for short periods, where the voltage is checked. After doing the check, the LVD module may be disabled.

Each time that the LVD module is enabled, the circuitry requires some time to stabilize. After the circuitry has stabilized, all status flags may be cleared. The module will then indicate the proper state of the system.

The following steps are needed to set up the LVD module:

1. Write the value to the LVDL3:LVDL0 bits (LVDCON register), which selects the desired LVD Trip Point.
2. Ensure that LVD interrupts are disabled (the LVDIE bit is cleared or the GIE bit is cleared).
3. Enable the LVD module (set the LVDEN bit in the LVDCON register).
4. Wait for the LVD module to stabilize (the IRVST bit to become set).
5. Clear the LVD interrupt flag, which may have falsely become set until the LVD module has stabilized (clear the LVDIF bit).
6. Enable the LVD interrupt (set the LVDIE and the GIE bits).

Figure 18-4 shows typical waveforms that the LVD module may be used to detect.

**FIGURE 18-4: LOW VOLTAGE DETECT WAVEFORMS**

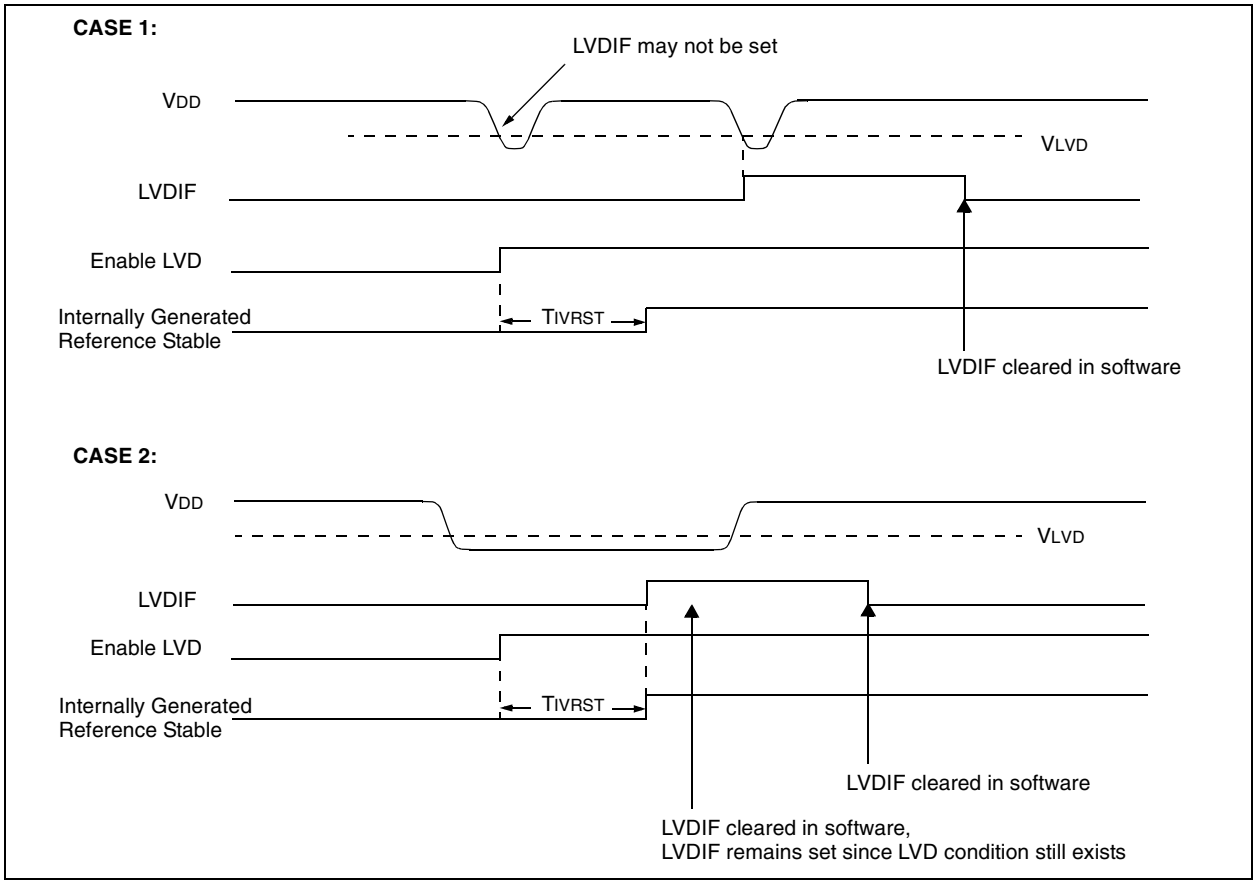



© 2006 Microchip Technology Inc.

### 18.2.1 REFERENCE VOLTAGE SET POINT

The Internal Reference Voltage of the LVD module may be used by other internal circuitry (the Programmable Brown-out Reset). If these circuits are disabled (lower current consumption), the reference voltage circuit requires a time to become stable before a low voltage condition can be reliably detected. This time is invariant of system clock speed. This start-up time is specified in electrical specification parameter 36. The low voltage interrupt flag will not be enabled until a stable reference voltage is reached. Refer to the waveform in Figure 18-4.

### 18.2.2 CURRENT CONSUMPTION

When the module is enabled, the LVD comparator and voltage divider are enabled and will consume static current. The voltage divider can be tapped from multiple places in the resistor array. Total current consumption, when enabled, is specified in electrical specification parameter #D022B.

## 18.3 Operation During SLEEP

When enabled, the LVD circuitry continues to operate during SLEEP. If the device voltage crosses the trip point, the LVDIF bit will be set and the device will wake-up from SLEEP. Device execution will continue from the interrupt vector address if interrupts have been globally enabled.

## 18.4 Effects of a RESET

A device RESET forces all registers to their RESET state. This forces the LVD module to be turned off.

**NOTES:**


© 2006 Microchip Technology Inc.

## 19.0 SPECIAL FEATURES OF THE CPU

There are several features intended to maximize system reliability, minimize cost through elimination of external components, provide power saving Operating modes and offer code protection. These are:

- OSC Selection
- RESET
  - Power-on Reset (POR)
  - Power-up Timer (PWRT)
  - Oscillator Start-up Timer (OST)
  - Brown-out Reset (BOR)
- Interrupts
- Watchdog Timer (WDT)
- SLEEP
- Code Protection
- ID Locations
- In-Circuit Serial Programming

All PIC18FXX2 devices have a Watchdog Timer, which is permanently enabled via the configuration bits or software controlled. It runs off its own RC oscillator for added reliability. There are two timers that offer necessary delays on power-up. One is the Oscillator Start-up Timer (OST), intended to keep the chip in RESET until the crystal oscillator is stable. The other is the Power-up Timer (PWRT), which provides a fixed delay on power-up only, designed to keep the part in RESET while the power supply stabilizes. With these two timers on-chip, most applications need no external RESET circuitry.

SLEEP mode is designed to offer a very low current Power-down mode. The user can wake-up from SLEEP through external RESET, Watchdog Timer Wake-up or through an interrupt. Several oscillator options are also made available to allow the part to fit the application. The RC oscillator option saves system cost, while the LP crystal option saves power. A set of configuration bits are used to select various options.

### 19.1 Configuration Bits

The configuration bits can be programmed (read as '0'), or left unprogrammed (read as '1'), to select various device configurations. These bits are mapped starting at program memory location 300000h.

The user will note that address 300000h is beyond the user program memory space. In fact, it belongs to the configuration memory space (300000h - 3FFFFFh), which can only be accessed using Table Reads and Table Writes.

Programming the configuration registers is done in a manner similar to programming the FLASH memory (see Section 5.5.1). The only difference is the configuration registers are written a byte at a time. The sequence of events for programming configuration registers is:

1. Load table pointer with address of configuration register being written.
2. Write a single byte using the `TBLWT` instruction.
3. Set EEPGD to point to program memory, set the CFGS bit to access configuration registers, and set WREN to enable byte writes.
4. Disable interrupts.
5. Write 55h to EECON2.
6. Write AAh to EECON2.
7. Set the WR bit. This will begin the write cycle.
8. CPU will stall for duration of write (approximately 2 ms using internal timer).
9. Execute a `NOP`.
10. Re-enable interrupts.

### TABLE 19-1: CONFIGURATION BITS AND DEVICE IDS

| File Name | | Bit 7 | Bit 6 | Bit 5 | Bit 4 | Bit 3 | Bit 2 | Bit 1 | Bit 0 | Default/ Unprogrammed Value |
|---|---|---|---|---|---|---|---|---|---|---|
| 300001h | CONFIG1H | — | — | $\overline{\text{OSCSEN}}$ | — | — | FOSC2 | FOSC1 | FOSC0 | --1- -111 |
| 300002h | CONFIG2L | — | — | — | — | BORV1 | BORV0 | BOREN | $\overline{\text{PWRTEN}}$ | ---- 1111 |
| 300003h | CONFIG2H | — | — | — | — | WDTPS2 | WDTPS1 | WDTPS0 | WDTEN | ---- 1111 |
| 300005h | CONFIG3H | — | — | — | — | — | — | — | CCP2MX | ---- ---1 |
| 300006h | CONFIG4L | $\overline{\text{DEBUG}}$ | — | — | — | — | LVP | — | STVREN | 1--- -1-1 |
| 300008h | CONFIG5L | — | — | — | — | CP3 | CP2 | CP1 | CP0 | ---- 1111 |
| 300009h | CONFIG5H | CPD | CPB | — | — | — | — | — | — | 11-- ---- |
| 30000Ah | CONFIG6L | — | — | — | — | WRT3 | WRT2 | WRT1 | WRT0 | ---- 1111 |
| 30000Bh | CONFIG6H | WRTD | WRTB | WRTC | — | — | — | — | — | 111- ---- |
| 30000Ch | CONFIG7L | — | — | — | — | EBTR3 | EBTR2 | EBTR1 | EBTR0 | ---- 1111 |
| 30000Dh | CONFIG7H | — | EBTRB | — | — | — | — | — | — | -1-- ---- |
| 3FFFFEh | DEVID1 | DEV2 | DEV1 | DEV0 | REV4 | REV3 | REV2 | REV1 | REV0 | **(1)** |
| 3FFFFFh | DEVID2 | DEV10 | DEV9 | DEV8 | DEV7 | DEV6 | DEV5 | DEV4 | DEV3 | 0000 0100 |

Legend: x = unknown, u = unchanged, - = unimplemented, q = value depends on condition.
Shaded cells are unimplemented, read as ‘0’.

**Note 1:** See Register 19-12 for DEVID1 values.

### REGISTER 19-1: CONFIGURATION REGISTER 1 HIGH (CONFIG1H: BYTE ADDRESS 300001h)

| U-0 | U-0 | R/P-1 | U-0 | U-0 | R/P-1 | R/P-1 | R/P-1 |
|---|---|---|---|---|---|---|---|
| — | — | $\overline{\text{OSCSEN}}$ | — | — | FOSC2 | FOSC1 | FOSC0 |
| bit 7 | | | | | | | bit 0 |

bit 7-6 **Unimplemented:** Read as ‘0’

bit 5 **$\overline{\text{OSCSEN}}$**: Oscillator System Clock Switch Enable bit
1 = Oscillator system clock switch option is disabled (main oscillator is source)
0 = Oscillator system clock switch option is enabled (oscillator switching is enabled)

bit 4-3 **Unimplemented:** Read as ‘0’

bit 2-0 **FOSC2:FOSC0**: Oscillator Selection bits
111 = RC oscillator w/ OSC2 configured as RA6
110 = HS oscillator with PLL enabled/Clock frequency = (4 x FOSC)
101 = EC oscillator w/ OSC2 configured as RA6
100 = EC oscillator w/ OSC2 configured as divide-by-4 clock output
011 = RC oscillator
010 = HS oscillator
001 = XT oscillator
000 = LP oscillator

| Legend: | | |
|---|---|---|
| R = Readable bit | P = Programmable bit | U = Unimplemented bit, read as ‘0’ |
| - n = Value when device is unprogrammed | | u = Unchanged from programmed state |


© 2006 Microchip Technology Inc.

**REGISTER 19-2: CONFIGURATION REGISTER 2 LOW (CONFIG2L: BYTE ADDRESS 300002h)**

| U-0 | U-0 | U-0 | U-0 | R/P-1 | R/P-1 | R/P-1 | R/P-1 |
|---|---|---|---|---|---|---|---|
| — | — | — | — | BORV1 | BORV0 | BOREN | $\overline{\text{PWRTEN}}$ |
| bit 7 | | | | | | | bit 0 |

bit 7-4 **Unimplemented:** Read as ‘0’

bit 3-2 **BORV1:BORV0:** Brown-out Reset Voltage bits

`11` = VBOR set to 2.5V
`10` = VBOR set to 2.7V
`01` = VBOR set to 4.2V
`00` = VBOR set to 4.5V

bit 1 **BOREN:** Brown-out Reset Enable bit

`1` = Brown-out Reset enabled
`0` = Brown-out Reset disabled

bit 0 **$\overline{\text{PWRTEN}}$:** Power-up Timer Enable bit

`1` = PWRT disabled
`0` = PWRT enabled

| Legend: | | |
|---|---|---|
| R = Readable bit | P = Programmable bit | U = Unimplemented bit, read as ‘0’ |
| - n = Value when device is unprogrammed | | u = Unchanged from programmed state |

**REGISTER 19-3: CONFIGURATION REGISTER 2 HIGH (CONFIG2H: BYTE ADDRESS 300003h)**

| U-0 | U-0 | U-0 | U-0 | R/P-1 | R/P-1 | R/P-1 | R/P-1 |
|---|---|---|---|---|---|---|---|
| — | — | — | — | WDTPS2 | WDTPS1 | WDTPS0 | WDTEN |
| bit 7 | | | | | | | bit 0 |

bit 7-4 **Unimplemented:** Read as ‘0’

bit 3-1 **WDTPS2:WDTPS0:** Watchdog Timer Postscale Select bits

`111` = 1:128
`110` = 1:64
`101` = 1:32
`100` = 1:16
`011` = 1:8
`010` = 1:4
`001` = 1:2
`000` = 1:1

bit 0 **WDTEN:** Watchdog Timer Enable bit

`1` = WDT enabled
`0` = WDT disabled (control is placed on the SWDTEN bit)

| Legend: | | |
|---|---|---|
| R = Readable bit | P = Programmable bit | U = Unimplemented bit, read as ‘0’ |
| - n = Value when device is unprogrammed | | u = Unchanged from programmed state |

**REGISTER 19-4: CONFIGURATION REGISTER 3 HIGH (CONFIG3H: BYTE ADDRESS 300005h)**

| U-0 | U-0 | U-0 | U-0 | U-0 | U-0 | U-0 | R/P-1 |
|---|---|---|---|---|---|---|---|
| — | — | — | — | — | — | — | CCP2MX |
| bit 7 | | | | | | | bit 0 |

bit 7-1 **Unimplemented:** Read as ‘0’

bit 0 **CCP2MX:** CCP2 Mux bit
1 = CCP2 input/output is multiplexed with RC1
0 = CCP2 input/output is multiplexed with RB3

| Legend: | | |
|---|---|---|
| R = Readable bit | P = Programmable bit | U = Unimplemented bit, read as ‘0’ |
| - n = Value when device is unprogrammed | | u = Unchanged from programmed state |

**REGISTER 19-5: CONFIGURATION REGISTER 4 LOW (CONFIG4L: BYTE ADDRESS 300006h)**

| R/P-1 | U-0 | U-0 | U-0 | U-0 | R/P-1 | U-0 | R/P-1 |
|---|---|---|---|---|---|---|---|
| $\overline{\text{BKBUG}}$ | — | — | — | — | LVP | — | STVREN |
| bit 7 | | | | | | | bit 0 |

bit 7 **$\overline{\text{DEBUG}}$:** Background Debugger Enable bit
1 = Background Debugger disabled. RB6 and RB7 configured as general purpose I/O pins.
0 = Background Debugger enabled. RB6 and RB7 are dedicated to In-Circuit Debug.

bit 6-3 **Unimplemented:** Read as ‘0’

bit 2 **LVP:** Low Voltage ICSP Enable bit
1 = Low Voltage ICSP enabled
0 = Low Voltage ICSP disabled

bit 1 **Unimplemented:** Read as ‘0’

bit 0 **STVREN:** Stack Full/Underflow Reset Enable bit
1 = Stack Full/Underflow will cause RESET
0 = Stack Full/Underflow will not cause RESET

| Legend: | | |
|---|---|---|
| R = Readable bit | C = Clearable bit | U = Unimplemented bit, read as ‘0’ |
| - n = Value when device is unprogrammed | | u = Unchanged from programmed state |


© 2006 Microchip Technology Inc.

**REGISTER 19-6: CONFIGURATION REGISTER 5 LOW (CONFIG5L: BYTE ADDRESS 300008h)**

| U-0 | U-0 | U-0 | U-0 | R/C-1 | R/C-1 | R/C-1 | R/C-1 |
|---|---|---|---|---|---|---|---|
| — | — | — | — | CP3(1) | CP2(1) | CP1 | CP0 |
| bit 7 | | | | | | | bit 0 |

bit 7-4 **Unimplemented:** Read as '0'

bit 3 **CP3:** Code Protection bit(1)
1 = Block 3 (006000-007FFFh) not code protected
0 = Block 3 (006000-007FFFh) code protected

bit 2 **CP2:** Code Protection bit(1)
1 = Block 2 (004000-005FFFh) not code protected
0 = Block 2 (004000-005FFFh) code protected

bit 1 **CP1:** Code Protection bit
1 = Block 1 (002000-003FFFh) not code protected
0 = Block 1 (002000-003FFFh) code protected

bit 0 **CP0:** Code Protection bit
1 = Block 0 (000200-001FFFh) not code protected
0 = Block 0 (000200-001FFFh) code protected

**Note 1:** Unimplemented in PIC18FX42 devices; maintain this bit set.

| Legend: | | |
|---|---|---|
| R = Readable bit | C = Clearable bit | U = Unimplemented bit, read as '0' |
| - n = Value when device is unprogrammed | | u = Unchanged from programmed state |

**REGISTER 19-7: CONFIGURATION REGISTER 5 HIGH (CONFIG5H: BYTE ADDRESS 300009h)**

| R/C-1 | R/C-1 | U-0 | U-0 | U-0 | U-0 | U-0 | U-0 |
|---|---|---|---|---|---|---|---|
| CPD | CPB | — | — | — | — | — | — |
| bit 7 | | | | | | | bit 0 |

bit 7 **CPD:** Data EEPROM Code Protection bit
1 = Data EEPROM not code protected
0 = Data EEPROM code protected

bit 6 **CPB:** Boot Block Code Protection bit
1 = Boot Block (000000-0001FFh) not code protected
0 = Boot Block (000000-0001FFh) code protected

bit 5-0 **Unimplemented:** Read as '0'

| Legend: | | |
|---|---|---|
| R = Readable bit | C = Clearable bit | U = Unimplemented bit, read as '0' |
| - n = Value when device is unprogrammed | | u = Unchanged from programmed state |

**REGISTER 19-8: CONFIGURATION REGISTER 6 LOW (CONFIG6L: BYTE ADDRESS 30000Ah)**

| U-0 | U-0 | U-0 | U-0 | R/C-1 | R/C-1 | R/C-1 | R/C-1 |
|---|---|---|---|---|---|---|---|
| — | — | — | — | WRT3(1) | WRT2(1) | WRT1 | WRT0 |
| bit 7 | | | | | | | bit 0 |

bit 7-4 **Unimplemented:** Read as '0'

bit 3 **WRT3:** Write Protection bit(1)
1 = Block 3 (006000-007FFFh) not write protected
0 = Block 3 (006000-007FFFh) write protected

bit 2 **WRT2:** Write Protection bit(1)
1 = Block 2 (004000-005FFFh) not write protected
0 = Block 2 (004000-005FFFh) write protected

bit 1 **WRT1:** Write Protection bit
1 = Block 1 (002000-003FFFh) not write protected
0 = Block 1 (002000-003FFFh) write protected

bit 0 **WRT0:** Write Protection bit
1 = Block 0 (000200h-001FFFh) not write protected
0 = Block 0 (000200h-001FFFh) write protected

**Note 1:** Unimplemented in PIC18FX42 devices; maintain this bit set.

| Legend: | | |
|---|---|---|
| R = Readable bit | C = Clearable bit | U = Unimplemented bit, read as '0' |
| - n = Value when device is unprogrammed | | u = Unchanged from programmed state |

**REGISTER 19-9: CONFIGURATION REGISTER 6 HIGH (CONFIG6H: BYTE ADDRESS 30000Bh)**

| R/C-1 | R/C-1 | C-1 | U-0 | U-0 | U-0 | U-0 | U-0 |
|---|---|---|---|---|---|---|---|
| WRTD | WRTB | WRTC | — | — | — | — | — |
| bit 7 | | | | | | | bit 0 |

bit 7 **WRTD:** Data EEPROM Write Protection bit
1 = Data EEPROM not write protected
0 = Data EEPROM write protected

bit 6 **WRTB:** Boot Block Write Protection bit
1 = Boot Block (000000-0001FFh) not write protected
0 = Boot Block (000000-0001FFh) write protected

bit 5 **WRTC:** Configuration Register Write Protection bit
1 = Configuration registers (300000-3000FFh) not write protected
0 = Configuration registers (300000-3000FFh) write protected

**Note:** This bit is read only, and cannot be changed in User mode.

bit 4-0 **Unimplemented:** Read as '0'

| Legend: | | |
|---|---|---|
| R = Readable bit | C =Clearable bit | U = Unimplemented bit, read as '0' |
| - n = Value when device is unprogrammed | | u = Unchanged from programmed state |


© 2006 Microchip Technology Inc.

### REGISTER 19-10: CONFIGURATION REGISTER 7 LOW (CONFIG7L: BYTE ADDRESS 30000Ch)

| U-0 | U-0 | U-0 | U-0 | R/C-1 | R/C-1 | R/C-1 | R/C-1 |
|---|---|---|---|---|---|---|---|
| — | — | — | — | EBTR3(1) | EBTR2(1) | EBTR1 | EBTR0 |
| bit 7 | | | | | | | bit 0 |

bit 7-4 **Unimplemented:** Read as ‘0’

bit 3 **EBTR3:** Table Read Protection bit(1)
1 = Block 3 (006000-007FFFh) not protected from Table Reads executed in other blocks
0 = Block 3 (006000-007FFFh) protected from Table Reads executed in other blocks

bit 2 **EBTR2:** Table Read Protection bit(1)
1 = Block 2 (004000-005FFFh) not protected from Table Reads executed in other blocks
0 = Block 2 (004000-005FFFh) protected from Table Reads executed in other blocks

bit 1 **EBTR1:** Table Read Protection bit
1 = Block 1 (002000-003FFFh) not protected from Table Reads executed in other blocks
0 = Block 1 (002000-003FFFh) protected from Table Reads executed in other blocks

bit 0 **EBTR0:** Table Read Protection bit
1 = Block 0 (000200h-001FFFh) not protected from Table Reads executed in other blocks
0 = Block 0 (000200h-001FFFh) protected from Table Reads executed in other blocks

**Note 1:** Unimplemented in PIC18FX42 devices; maintain this bit set.

| Legend: | | |
|---|---|---|
| R = Readable bit | C = Clearable bit | U = Unimplemented bit, read as ‘0’ |
| - n = Value when device is unprogrammed | | u = Unchanged from programmed state |

### REGISTER 19-11: CONFIGURATION REGISTER 7 HIGH (CONFIG7H: BYTE ADDRESS 30000Dh)

| U-0 | R/C-1 | U-0 | U-0 | U-0 | U-0 | U-0 | U-0 |
|---|---|---|---|---|---|---|---|
| — | EBTRB | — | — | — | — | — | — |
| bit 7 | | | | | | | bit 0 |

bit 7 **Unimplemented:** Read as ‘0’

bit 6 **EBTRB:** Boot Block Table Read Protection bit
1 = Boot Block (000000-0001FFh) not protected from Table Reads executed in other blocks
0 = Boot Block (000000-0001FFh) protected from Table Reads executed in other blocks

bit 5-0 **Unimplemented:** Read as ‘0’

| Legend: | | |
|---|---|---|
| R = Readable bit | C =Clearable bit | U = Unimplemented bit, read as ‘0’ |
| - n = Value when device is unprogrammed | | u = Unchanged from programmed state |

**REGISTER 19-12: DEVICE ID REGISTER 1 FOR PIC18FXX2 (DEVID1: BYTE ADDRESS 3FFFFEh)**

| R | R | R | R | R | R | R | R |
|---|---|---|---|---|---|---|---|
| DEV2 | DEV1 | DEV0 | REV4 | REV3 | REV2 | REV1 | REV0 |
| bit 7 | | | | | | | bit 0 |

bit 7-5 **DEV2:DEV0:** Device ID bits
`000` = PIC18F252
`001` = PIC18F452
`100` = PIC18F242
`101` = PIC18F442

bit 4-0 **REV4:REV0:** Revision ID bits
These bits are used to indicate the device revision.

| Legend: | | |
|---|---|---|
| R = Readable bit | P =Programmable bit | U = Unimplemented bit, read as ‘0’ |
| - n = Value when device is unprogrammed | | u = Unchanged from programmed state |

**REGISTER 19-13: DEVICE ID REGISTER 2 FOR PIC18FXX2 (DEVID2: BYTE ADDRESS 3FFFFFh)**

| R | R | R | R | R | R | R | R |
|---|---|---|---|---|---|---|---|
| DEV10 | DEV9 | DEV8 | DEV7 | DEV6 | DEV5 | DEV4 | DEV3 |
| bit 7 | | | | | | | bit 0 |

bit 7-0 **DEV10:DEV3:** Device ID bits
These bits are used with the DEV2:DEV0 bits in the Device ID Register 1 to identify the part number.

| Legend: | | |
|---|---|---|
| R = Readable bit | P =Programmable bit | U = Unimplemented bit, read as ‘0’ |
| - n = Value when device is unprogrammed | | u = Unchanged from programmed state |


© 2006 Microchip Technology Inc.

## 19.2 Watchdog Timer (WDT)

The Watchdog Timer is a free running on-chip RC oscillator, which does not require any external components. This RC oscillator is separate from the RC oscillator of the OSC1/CLKI pin. That means that the WDT will run, even if the clock on the OSC1/CLKI and OSC2/CLKO/RA6 pins of the device has been stopped, for example, by execution of a `SLEEP` instruction.

During normal operation, a WDT time-out generates a device RESET (Watchdog Timer Reset). If the device is in SLEEP mode, a WDT time-out causes the device to wake-up and continue with normal operation (Watchdog Timer Wake-up). The $\overline{TO}$ bit in the RCON register will be cleared upon a WDT time-out.

The Watchdog Timer is enabled/disabled by a device configuration bit. If the WDT is enabled, software execution may not disable this function. When the WDTEN configuration bit is cleared, the SWDTEN bit enables/disables the operation of the WDT.

The WDT time-out period values may be found in the Electrical Specifications (Section 22.0) under parameter D031. Values for the WDT postscaler may be assigned using the configuration bits.

| | |
|---|---|
| **Note:** | The `CLRWDT` and `SLEEP` instructions clear the WDT and the postscaler, if assigned to the WDT and prevent it from timing out and generating a device RESET condition. |

| | |
|---|---|
| **Note:** | When a `CLRWDT` instruction is executed and the postscaler is assigned to the WDT, the postscaler count will be cleared, but the postscaler assignment is not changed. |

### 19.2.1 CONTROL REGISTER

Register 19-14 shows the WDTCON register. This is a readable and writable register, which contains a control bit that allows software to override the WDT enable configuration bit, only when the configuration bit has disabled the WDT.

**REGISTER 19-14: WDTCON REGISTER**

| U-0 | U-0 | U-0 | U-0 | U-0 | U-0 | U-0 | R/W-0 |
|---|---|---|---|---|---|---|---|
| — | — | — | — | — | — | — | SWDTEN |
| bit 7 | | | | | | | bit 0 |

bit 7-1 **Unimplemented**: Read as ’0’

bit 0 **SWDTEN:** Software Controlled Watchdog Timer Enable bit
`1` = Watchdog Timer is on
`0` = Watchdog Timer is turned off if the WDTEN configuration bit in the configuration register = ‘0’

| Legend: | |
|---|---|
| R = Readable bit | W = Writable bit |
| U = Unimplemented bit, read as ‘0’ | - n = Value at POR |

### 19.2.2 WDT POSTSCALER

The WDT has a postscaler that can extend the WDT Reset period. The postscaler is selected at the time of the device programming, by the value written to the CONFIG2H configuration register.

**FIGURE 19-1: WATCHDOG TIMER BLOCK DIAGRAM**

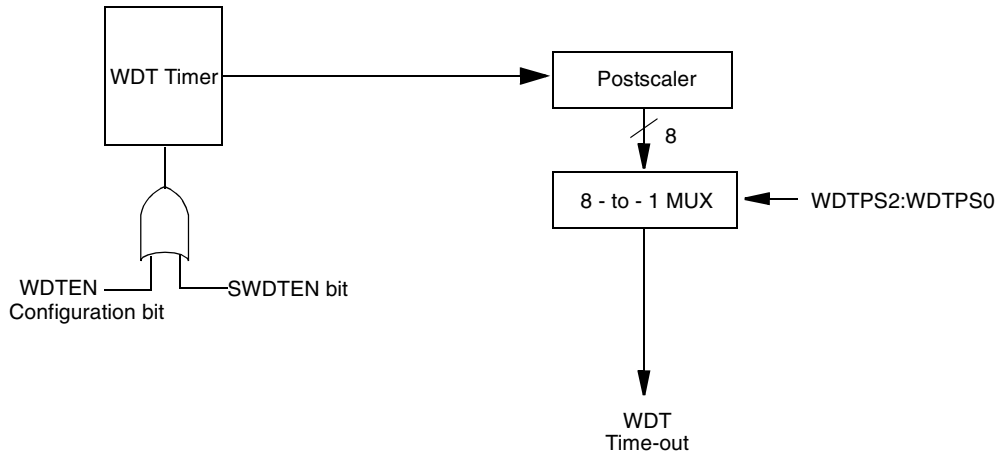


**Note:** WDPS2:WDPS0 are bits in register CONFIG2H.

**TABLE 19-2: SUMMARY OF WATCHDOG TIMER REGISTERS**

| Name | Bit 7 | Bit 6 | Bit 5 | Bit 4 | Bit 3 | Bit 2 | Bit 1 | Bit 0 |
|---|---|---|---|---|---|---|---|---|
| CONFIG2H | — | — | — | — | WDTPS2 | WDTPS2 | WDTPS0 | WDTEN |
| RCON | IPEN | — | — | $\overline{RI}$ | $\overline{TO}$ | $\overline{PD}$ | $\overline{POR}$ | $\overline{BOR}$ |
| WDTCON | — | — | — | — | — | — | — | SWDTEN |

Legend: Shaded cells are not used by the Watchdog Timer.


© 2006 Microchip Technology Inc.

## 19.3 Power-down Mode (SLEEP)

Power-down mode is entered by executing a SLEEP instruction.

If enabled, the Watchdog Timer will be cleared, but keeps running, the $\overline{PD}$ bit (RCON<3>) is cleared, the $\overline{TO}$ (RCON<4>) bit is set, and the oscillator driver is turned off. The I/O ports maintain the status they had before the SLEEP instruction was executed (driving high, low or hi-impedance).

For lowest current consumption in this mode, place all I/O pins at either VDD or VSS, ensure no external circuitry is drawing current from the I/O pin, power-down the A/D and disable external clocks. Pull all I/O pins that are hi-impedance inputs, high or low externally, to avoid switching currents caused by floating inputs. The T0CKI input should also be at VDD or VSS for lowest current consumption. The contribution from on-chip pull-ups on PORTB should be considered.

The $\overline{MCLR}$ pin must be at a logic high level (VIHMC).

### 19.3.1 WAKE-UP FROM SLEEP

The device can wake-up from SLEEP through one of the following events:

1. External RESET input on $\overline{MCLR}$ pin.
2. Watchdog Timer Wake-up (if WDT was enabled).
3. Interrupt from INT pin, RB port change or a Peripheral Interrupt.

The following peripheral interrupts can wake the device from SLEEP:

1. PSP read or write.
2. TMR1 interrupt. Timer1 must be operating as an asynchronous counter.
3. TMR3 interrupt. Timer3 must be operating as an asynchronous counter.
4. CCP Capture mode interrupt.
5. Special event trigger (Timer1 in Asynchronous mode using an external clock).
6. MSSP (START/STOP) bit detect interrupt.
7. MSSP transmit or receive in Slave mode (SPI/$I^2C$).
8. USART RX or TX (Synchronous Slave mode).
9. A/D conversion (when A/D clock source is RC).
10. EEPROM write operation complete.
11. LVD interrupt.

Other peripherals cannot generate interrupts, since during SLEEP, no on-chip clocks are present.

External $\overline{MCLR}$ Reset will cause a device RESET. All other events are considered a continuation of program execution and will cause a “wake-up”. The $\overline{TO}$ and $\overline{PD}$ bits in the RCON register can be used to determine the cause of the device RESET. The $\overline{PD}$ bit, which is set on power-up, is cleared when SLEEP is invoked. The $\overline{TO}$ bit is cleared, if a WDT time-out occurred (and caused wake-up).

When the SLEEP instruction is being executed, the next instruction (PC + 2) is pre-fetched. For the device to wake-up through an interrupt event, the corresponding interrupt enable bit must be set (enabled). Wake-up is regardless of the state of the GIE bit. If the GIE bit is clear (disabled), the device continues execution at the instruction after the SLEEP instruction. If the GIE bit is set (enabled), the device executes the instruction after the SLEEP instruction and then branches to the interrupt address. In cases where the execution of the instruction following SLEEP is not desirable, the user should have a NOP after the SLEEP instruction.

### 19.3.2 WAKE-UP USING INTERRUPTS

When global interrupts are disabled (GIE cleared) and any interrupt source has both its interrupt enable bit and interrupt flag bit set, one of the following will occur:

- If an interrupt condition (interrupt flag bit and interrupt enable bits are set) occurs **before** the execution of a SLEEP instruction, the SLEEP instruction will complete as a NOP. Therefore, the WDT and WDT postscaler will not be cleared, the $\overline{TO}$ bit will not be set and $\overline{PD}$ bits will not be cleared.
- If the interrupt condition occurs **during or after** the execution of a SLEEP instruction, the device will immediately wake-up from SLEEP. The SLEEP instruction will be completely executed before the wake-up. Therefore, the WDT and WDT postscaler will be cleared, the $\overline{TO}$ bit will be set and the $\overline{PD}$ bit will be cleared.

Even if the flag bits were checked before executing a SLEEP instruction, it may be possible for flag bits to become set before the SLEEP instruction completes. To determine whether a SLEEP instruction executed, test the $\overline{PD}$ bit. If the $\overline{PD}$ bit is set, the SLEEP instruction was executed as a NOP.

To ensure that the WDT is cleared, a CLRWDT instruction should be executed before a SLEEP instruction.

**FIGURE 19-2: WAKE-UP FROM SLEEP THROUGH INTERRUPT(1,2)**

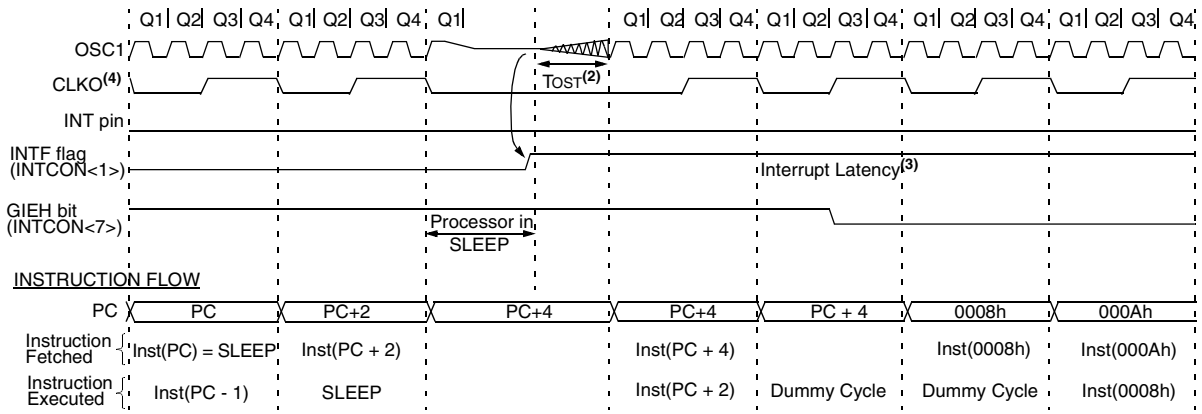


**Note 1:** XT, HS or LP Oscillator mode assumed.
**2:** GIE = '1' assumed. In this case, after wake-up, the processor jumps to the interrupt routine. If GIE = '0', execution will continue in-line.
**3:** TOST = 1024 TOSC (drawing not to scale). This delay will not occur for RC and EC Osc modes.
**4:** CLKO is not available in these Osc modes, but shown here for timing reference.


© 2006 Microchip Technology Inc.

## 19.4 Program Verification and Code Protection

The overall structure of the code protection on the PIC18 FLASH devices differs significantly from other PICmicro devices.

The user program memory is divided into five blocks. One of these is a boot block of 512 bytes. The remainder of the memory is divided into four blocks on binary boundaries.

Each of the five blocks has three code protection bits associated with them. They are:

- Code Protect bit (CPn)
- Write Protect bit (WRTn)
- External Block Table Read bit (EBTRn)

Figure 19-3 shows the program memory organization for 16- and 32-Kbyte devices, and the specific code protection bit associated with each block. The actual locations of the bits are summarized in Table 19-3.

**FIGURE 19-3: CODE PROTECTED PROGRAM MEMORY FOR PIC18F2XX/4XX**

| MEMORY SIZE/DEVICE | | | |
|---|---|---|---|
| **16 Kbytes (PIC18FX42)** | **32 Kbytes (PIC18FX52)** | **Address Range** | **Block Code Protection Controlled By:** |
| Boot Block | Boot Block | 000000h<br>0001FFh | CPB, WRTB, EBTRB |
| Block 0 | Block 0 | 000200h<br>001FFFh | CP0, WRT0, EBTR0 |
| Block 1 | Block 1 | 002000h<br>003FFFh | CP1, WRT1, EBTR1 |
| Unimplemented Read 0's | Block 2 | 004000h<br>005FFFh | CP2, WRT2, EBTR2 |
| Unimplemented Read 0's | Block 3 | 006000h<br>007FFFh | CP3, WRT3, EBTR3 |
| Unimplemented Read 0's | Unimplemented Read 0's | 008000h<br>1FFFFFh | (Unimplemented Memory Space) |

**TABLE 19-3: SUMMARY OF CODE PROTECTION REGISTERS**

| File Name | | Bit 7 | Bit 6 | Bit 5 | Bit 4 | Bit 3 | Bit 2 | Bit 1 | Bit 0 |
|---|---|---|---|---|---|---|---|---|---|
| 300008h | CONFIG5L | — | — | — | — | CP3 | CP2 | CP1 | CP0 |
| 300009h | CONFIG5H | CPD | CPB | — | — | — | — | — | — |
| 30000Ah | CONFIG6L | — | — | — | — | WRT3 | WRT2 | WRT1 | WRT0 |
| 30000Bh | CONFIG6H | WRTD | WRTB | WRTC | — | — | — | — | — |
| 30000Ch | CONFIG7L | — | — | — | — | EBTR3 | EBTR2 | EBTR1 | EBTR0 |
| 30000Dh | CONFIG7H | — | EBTRB | — | — | — | — | — | — |

Legend: Shaded cells are unimplemented.

### 19.4.1 PROGRAM MEMORY CODE PROTECTION

The user memory may be read to or written from any location using the Table Read and Table Write instructions. The device ID may be read with Table Reads. The configuration registers may be read and written with the Table Read and Table Write instructions.

In User mode, the CPn bits have no direct effect. CPn bits inhibit external reads and writes. A block of user memory may be protected from Table Writes if the WRTn configuration bit is '0'. The EBTRn bits control Table Reads. For a block of user memory with the EBTRn bit set to '0', a Table Read instruction that executes from within that block is allowed to read. A Table Read instruction that executes from a location outside of that block is not allowed to read, and will result in reading '0's. Figures 19-4 through 19-6 illustrate Table Write and Table Read protection.

> **Note:** Code protection bits may only be written to a '0' from a '1' state. It is not possible to write a '1' to a bit in the '0' state. Code protection bits are only set to '1' by a full chip erase or block erase function. The full chip erase and block erase functions can only be initiated via ICSP or an external programmer.

**FIGURE 19-4: TABLE WRITE (WRTn) DISALLOWED**

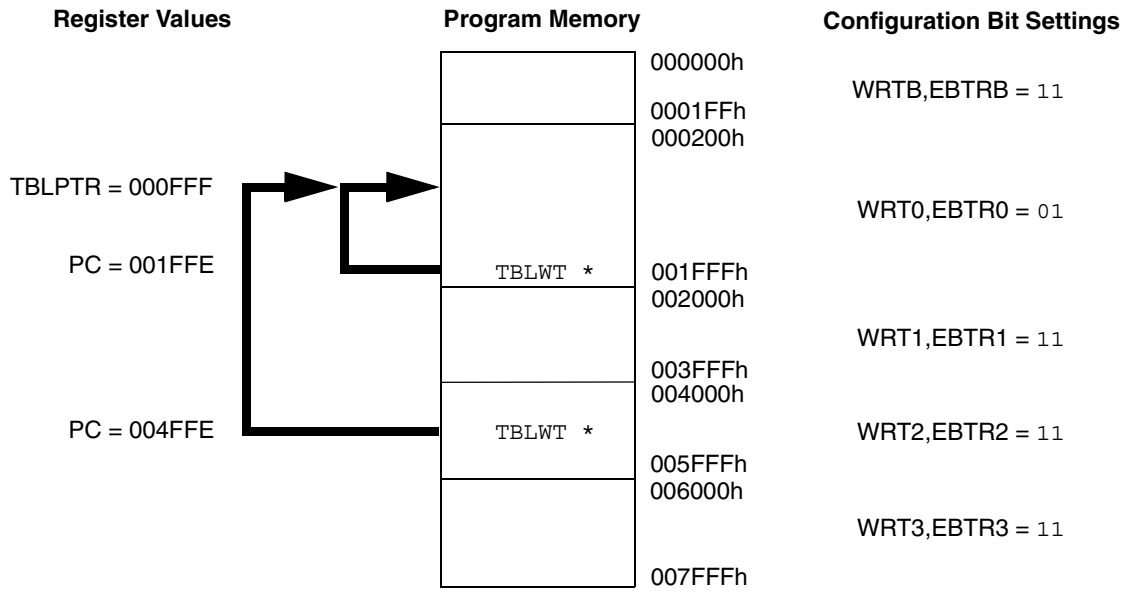


**Results:** All Table Writes disabled to Blockn whenever WRTn = '0'.


© 2006 Microchip Technology Inc.

**FIGURE 19-5: EXTERNAL BLOCK TABLE READ (EBTRn) DISALLOWED**

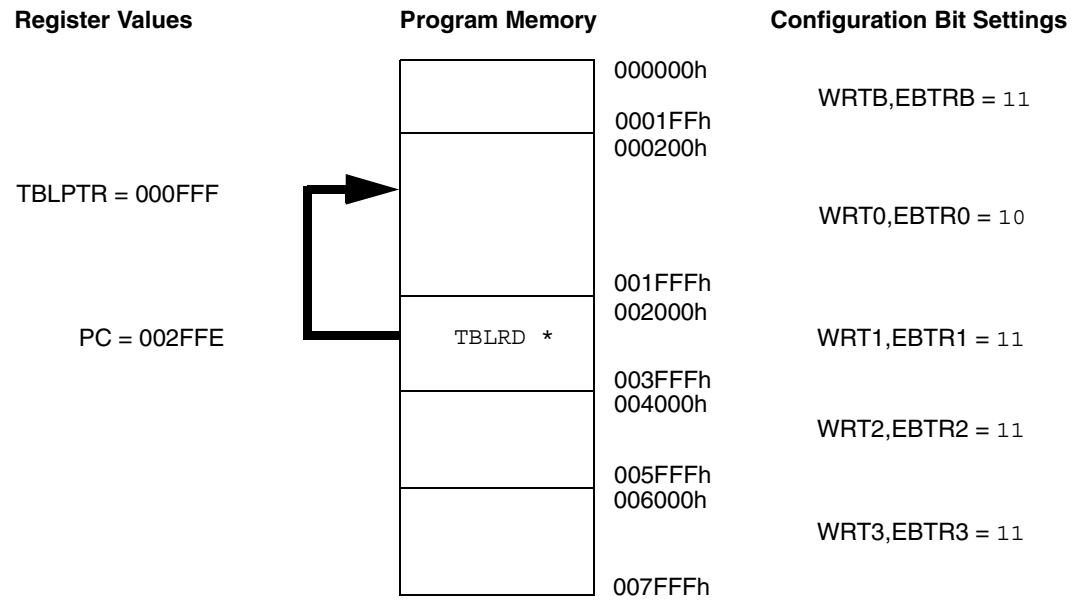


**Results:** All Table Reads from external blocks to Blockn are disabled whenever EBTRn = ‘0’.
TABLAT register returns a value of “0”.

**FIGURE 19-6: EXTERNAL BLOCK TABLE READ (EBTRn) ALLOWED**

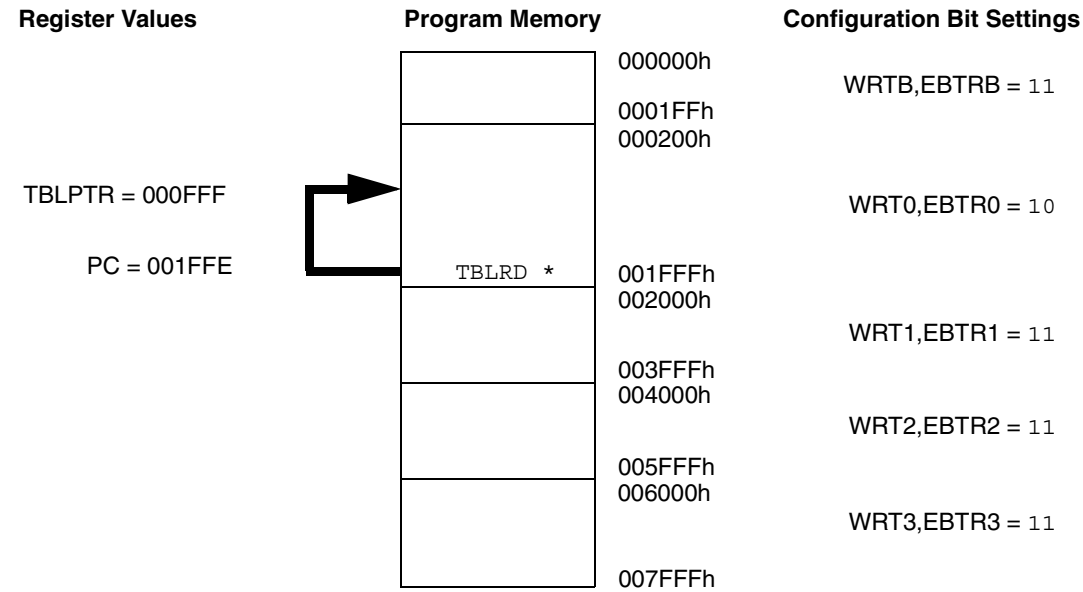


**Results:** Table Reads permitted within Blockn, even when EBTRBn = ‘0’.
TABLAT register returns the value of the data at the location TBLPTR.

### 19.4.2 DATA EEPROM CODE PROTECTION

The entire Data EEPROM is protected from external reads and writes by two bits: CPD and WRTD. CPD inhibits external reads and writes of Data EEPROM. WRTD inhibits external writes to Data EEPROM. The CPU can continue to read and write Data EEPROM regardless of the protection bit settings.

### 19.4.3 CONFIGURATION REGISTER PROTECTION

The configuration registers can be write protected. The WRTC bit controls protection of the configuration registers. In User mode, the WRTC bit is readable only. WRTC can only be written via ICSP or an external programmer.

## 19.5 ID Locations

Eight memory locations (200000h - 200007h) are designated as ID locations, where the user can store checksum or other code identification numbers. These locations are accessible during normal execution through the `TBLRD` and `TBLWT` instructions, or during program/verify. The ID locations can be read when the device is code protected.

The sequence for programming the ID locations is similar to programming the FLASH memory (see Section 5.5.1).

## 19.6 In-Circuit Serial Programming

PIC18FXXX microcontrollers can be serially programmed while in the end application circuit. This is simply done with two lines for clock and data, and three other lines for power, ground and the programming voltage. This allows customers to manufacture boards with unprogrammed devices, and then program the microcontroller just before shipping the product. This also allows the most recent firmware or a custom firmware to be programmed.

## 19.7 In-Circuit Debugger

When the DEBUG bit in configuration register CONFIG4L is programmed to a '0', the In-Circuit Debugger functionality is enabled. This function allows simple debugging functions when used with MPLAB® IDE. When the microcontroller has this feature enabled, some of the resources are not available for general use. Table 19-4 shows which features are consumed by the background debugger.

**TABLE 19-4: DEBUGGER RESOURCES**

| I/O pins | RB6, RB7 |
|---|---|
| Stack | 2 levels |
| Program Memory | 512 bytes |
| Data Memory | 10 bytes |

To use the In-Circuit Debugger function of the microcontroller, the design must implement In-Circuit Serial Programming connections to $\overline{\text{MCLR}}$/VPP, VDD, GND, RB7 and RB6. This will interface to the In-Circuit Debugger module available from Microchip or one of the third party development tool companies.

## 19.8 Low Voltage ICSP Programming

The LVP bit configuration register CONFIG4L enables low voltage ICSP programming. This mode allows the microcontroller to be programmed via ICSP using a VDD source in the operating voltage range. This only means that VPP does not have to be brought to VIHH, but can instead be left at the normal operating voltage. In this mode, the RB5/PGM pin is dedicated to the programming function and ceases to be a general purpose I/O pin. During programming, VDD is applied to the $\overline{\text{MCLR}}$/VPP pin. To enter Programming mode, VDD must be applied to the RB5/PGM, provided the LVP bit is set. The LVP bit defaults to a (‘1’) from the factory.

**Note 1:** The High Voltage Programming mode is always available, regardless of the state of the LVP bit, by applying VIHH to the $\overline{\text{MCLR}}$ pin.

**2:** While in low voltage ICSP mode, the RB5 pin can no longer be used as a general purpose I/O pin, and should be held low during normal operation to protect against inadvertent ICSP mode entry.

**3:** When using low voltage ICSP programming (LVP), the pull-up on RB5 becomes disabled. If TRISB bit 5 is cleared, thereby setting RB5 as an output, LATB bit 5 must also be cleared for proper operation.

If Low Voltage Programming mode is not used, the LVP bit can be programmed to a '0' and RB5/PGM becomes a digital I/O pin. However, the LVP bit may only be programmed when programming is entered with VIHH on $\overline{\text{MCLR}}$/VPP.

It should be noted that once the LVP bit is programmed to 0, only the High Voltage Programming mode is available and only High Voltage Programming mode can be used to program the device.

When using low voltage ICSP, the part must be supplied 4.5V to 5.5V, if a bulk erase will be executed. This includes reprogramming of the code protect bits from an on-state to off-state. For all other cases of low voltage ICSP, the part may be programmed at the normal operating voltage. This means unique user IDs, or user code can be reprogrammed or added.


© 2006 Microchip Technology Inc.

## 20.0 INSTRUCTION SET SUMMARY

The PIC18FXXX instruction set adds many enhancements to the previous PICmicro instruction sets, while maintaining an easy migration from these PICmicro instruction sets.

Most instructions are a single program memory word (16-bits), but there are three instructions that require two program memory locations.

Each single word instruction is a 16-bit word divided into an OPCODE, which specifies the instruction type and one or more operands, which further specify the operation of the instruction.

The instruction set is highly orthogonal and is grouped into four basic categories:

- **Byte-oriented** operations
- **Bit-oriented** operations
- **Literal** operations
- **Control** operations

The PIC18FXXX instruction set summary in Table 20-2 lists **byte-oriented**, **bit-oriented**, **literal** and **control** operations. Table 20-1 shows the opcode field descriptions.

Most **byte-oriented** instructions have three operands:

1. The file register (specified by ‘f’)
2. The destination of the result (specified by ‘d’)
3. The accessed memory (specified by ‘a’)

The file register designator 'f' specifies which file register is to be used by the instruction.

The destination designator ‘d’ specifies where the result of the operation is to be placed. If 'd' is zero, the result is placed in the WREG register. If 'd' is one, the result is placed in the file register specified in the instruction.

All **bit-oriented** instructions have three operands:

1. The file register (specified by ‘f’)
2. The bit in the file register (specified by ‘b’)
3. The accessed memory (specified by ‘a’)

The bit field designator 'b' selects the number of the bit affected by the operation, while the file register designator 'f' represents the number of the file in which the bit is located.

The **literal** instructions may use some of the following operands:

- A literal value to be loaded into a file register (specified by ‘k’)
- The desired FSR register to load the literal value into (specified by ‘f’)
- No operand required (specified by ‘—’)

The **control** instructions may use some of the following operands:

- A program memory address (specified by ‘n’)
- The mode of the Call or Return instructions (specified by ‘s’)
- The mode of the Table Read and Table Write instructions (specified by ‘m’)
- No operand required (specified by ‘—’)

All instructions are a single word, except for three double-word instructions. These three instructions were made double-word instructions so that all the required information is available in these 32 bits. In the second word, the 4-MSbs are 1’s. If this second word is executed as an instruction (by itself), it will execute as a `NOP`.

All single word instructions are executed in a single instruction cycle, unless a conditional test is true or the program counter is changed as a result of the instruction. In these cases, the execution takes two instruction cycles with the additional instruction cycle(s) executed as a `NOP`.

The double-word instructions execute in two instruction cycles.

One instruction cycle consists of four oscillator periods. Thus, for an oscillator frequency of 4 MHz, the normal instruction execution time is 1 µs. If a conditional test is true or the program counter is changed as a result of an instruction, the instruction execution time is 2 µs. Two-word branch instructions (if true) would take 3 µs.

Figure 20-1 shows the general formats that the instructions can have.

All examples use the format `'nnh'` to represent a hexadecimal number, where `'h'` signifies a hexadecimal digit.

The Instruction Set Summary, shown in Table 20-2, lists the instructions recognized by the Microchip Assembler (MPASM™).

Section 20.1 provides a description of each instruction.

## TABLE 20-1: OPCODE FIELD DESCRIPTIONS

| Field | Description |
|---|---|
| a | RAM access bit<br>a = 0: RAM location in Access RAM (BSR register is ignored)<br>a = 1: RAM bank is specified by BSR register |
| bbb | Bit address within an 8-bit file register (0 to 7) |
| BSR | Bank Select Register. Used to select the current RAM bank. |
| d | Destination select bit;<br>d = 0: store result in WREG,<br>d = 1: store result in file register f. |
| dest | Destination either the WREG register or the specified register file location |
| f | 8-bit Register file address (0x00 to 0xFF) |
| fs | 12-bit Register file address (0x000 to 0xFFF). This is the source address. |
| fd | 12-bit Register file address (0x000 to 0xFFF). This is the destination address. |
| k | Literal field, constant data or label (may be either an 8-bit, 12-bit or a 20-bit value) |
| label | Label name |
| mm<br><br>*<br>*+<br>*-<br>+* | The mode of the TBLPTR register for the Table Read and Table Write instructions.<br>Only used with Table Read and Table Write instructions:<br>No Change to register (such as TBLPTR with Table reads and writes)<br>Post-Increment register (such as TBLPTR with Table reads and writes)<br>Post-Decrement register (such as TBLPTR with Table reads and writes)<br>Pre-Increment register (such as TBLPTR with Table reads and writes) |
| n | The relative address (2's complement number) for relative branch instructions, or the direct address for Call/Branch and Return instructions |
| PRODH | Product of Multiply high byte |
| PRODL | Product of Multiply low byte |
| s | Fast Call/Return mode select bit.<br>s = 0: do not update into/from shadow registers<br>s = 1: certain registers loaded into/from shadow registers (Fast mode) |
| u | Unused or Unchanged |
| WREG | Working register (accumulator) |
| x | Don't care (0 or 1)<br>The assembler will generate code with x = 0. It is the recommended form of use for compatibility with all Microchip software tools. |
| TBLPTR | 21-bit Table Pointer (points to a Program Memory location) |
| TABLAT | 8-bit Table Latch |
| TOS | Top-of-Stack |
| PC | Program Counter |
| PCL | Program Counter Low Byte |
| PCH | Program Counter High Byte |
| PCLATH | Program Counter High Byte Latch |
| PCLATU | Program Counter Upper Byte Latch |
| GIE | Global Interrupt Enable bit |
| WDT | Watchdog Timer |
| $\overline{TO}$ | Time-out bit |
| $\overline{PD}$ | Power-down bit |
| C, DC, Z, OV, N | ALU status bits Carry, Digit Carry, Zero, Overflow, Negative |
| [ ] | Optional |
| ( ) | Contents |
| → | Assigned to |
| < > | Register bit field |
| ∈ | In the set of |
| italics | User defined term (font is courier) |


© 2006 Microchip Technology Inc.

## FIGURE 20-1: GENERAL FORMAT FOR INSTRUCTIONS

**Byte-oriented** file register operations — **Example Instruction**

| 15 – 10 | 9 | 8 | 7 – 0 |
|---|---|---|---|
| OPCODE | d | a | f (FILE #) |

ADDWF MYREG, W, B

d = 0 for result destination to be WREG register
d = 1 for result destination to be file register (f)
a = 0 to force Access Bank
a = 1 for BSR to select bank
f = 8-bit file register address

**Byte to Byte** move operations (2-word)

| 15 – 12 | 11 – 0 |
|---|---|
| OPCODE | f (Source FILE #) |
| 1111 | f (Destination FILE #) |

MOVFF MYREG1, MYREG2

f = 12-bit file register address

**Bit-oriented** file register operations

| 15 – 12 | 11 – 9 | 8 | 7 – 0 |
|---|---|---|---|
| OPCODE | b (BIT #) | a | f (FILE #) |

BSF MYREG, bit, B

b = 3-bit position of bit in file register (f)
a = 0 to force Access Bank
a = 1 for BSR to select bank
f = 8-bit file register address

**Literal** operations

| 15 – 8 | 7 – 0 |
|---|---|
| OPCODE | k (literal) |

MOVLW 0x7F

k = 8-bit immediate value

**Control** operations

**CALL, GOTO and Branch** operations

| 15 – 8 | 7 – 0 |
|---|---|
| OPCODE | n<7:0> (literal) |
| 1111 | n<19:8> (literal) |

GOTO Label

n = 20-bit immediate value

| 15 – 8 | 7 | 7 – 0 |
|---|---|---|
| OPCODE | S | n<7:0> (literal) |
| | | n<19:8> (literal) |

CALL MYFUNC

S = Fast bit

| 15 – 11 | 10 – 0 |
|---|---|
| OPCODE | n<10:0> (literal) |

BRA MYFUNC

| 15 – 8 | 7 – 0 |
|---|---|
| OPCODE | n<7:0> (literal) |

BC MYFUNC

## TABLE 20-2: PIC18FXXX INSTRUCTION SET

| Mnemonic, Operands | | Description | Cycles | 16-Bit Instruction Word MSb | | | LSb | Status Affected | Notes |
|---|---|---|---|---|---|---|---|---|---|
| **BYTE-ORIENTED FILE REGISTER OPERATIONS** | | | | | | | | | |
| ADDWF | f, d, a | Add WREG and f | 1 | 0010 | 01da0 | ffff | ffff | C, DC, Z, OV, N | 1, 2 |
| ADDWFC | f, d, a | Add WREG and Carry bit to f | 1 | 0010 | 0da | ffff | ffff | C, DC, Z, OV, N | 1, 2 |
| ANDWF | f, d, a | AND WREG with f | 1 | 0001 | 01da | ffff | ffff | Z, N | 1,2 |
| CLRF | f, a | Clear f | 1 | 0110 | 101a | ffff | ffff | Z | 2 |
| COMF | f, d, a | Complement f | 1 | 0001 | 11da | ffff | ffff | Z, N | 1, 2 |
| CPFSEQ | f, a | Compare f with WREG, skip = | 1 (2 or 3) | 0110 | 001a | ffff | ffff | None | 4 |
| CPFSGT | f, a | Compare f with WREG, skip > | 1 (2 or 3) | 0110 | 010a | ffff | ffff | None | 4 |
| CPFSLT | f, a | Compare f with WREG, skip < | 1 (2 or 3) | 0110 | 000a | ffff | ffff | None | 1, 2 |
| DECF | f, d, a | Decrement f | 1 | 0000 | 01da | ffff | ffff | C, DC, Z, OV, N | 1, 2, 3, 4 |
| DECFSZ | f, d, a | Decrement f, Skip if 0 | 1 (2 or 3) | 0010 | 11da | ffff | ffff | None | 1, 2, 3, 4 |
| DCFSNZ | f, d, a | Decrement f, Skip if Not 0 | 1 (2 or 3) | 0100 | 11da | ffff | ffff | None | 1, 2 |
| INCF | f, d, a | Increment f | 1 | 0010 | 10da | ffff | ffff | C, DC, Z, OV, N | 1, 2, 3, 4 |
| INCFSZ | f, d, a | Increment f, Skip if 0 | 1 (2 or 3) | 0011 | 11da | ffff | ffff | None | 4 |
| INFSNZ | f, d, a | Increment f, Skip if Not 0 | 1 (2 or 3) | 0100 | 10da | ffff | ffff | None | 1, 2 |
| IORWF | f, d, a | Inclusive OR WREG with f | 1 | 0001 | 00da | ffff | ffff | Z, N | 1, 2 |
| MOVF | f, d, a | Move f | 1 | 0101 | 00da | ffff | ffff | Z, N | 1 |
| MOVFF | $f_s$, $f_d$ | Move $f_s$ (source) to 1st word | 2 | 1100 | ffff | ffff | ffff | None | |
| | | $f_d$ (destination) 2nd word | | 1111 | ffff | ffff | ffff | | |
| MOVWF | f, a | Move WREG to f | 1 | 0110 | 111a | ffff | ffff | None | |
| MULWF | f, a | Multiply WREG with f | 1 | 0000 | 001a | ffff | ffff | None | |
| NEGF | f, a | Negate f | 1 | 0110 | 110a | ffff | ffff | C, DC, Z, OV, N | 1, 2 |
| RLCF | f, d, a | Rotate Left f through Carry | 1 | 0011 | 01da | ffff | ffff | C, Z, N | |
| RLNCF | f, d, a | Rotate Left f (No Carry) | 1 | 0100 | 01da | ffff | ffff | Z, N | 1, 2 |
| RRCF | f, d, a | Rotate Right f through Carry | 1 | 0011 | 00da | ffff | ffff | C, Z, N | |
| RRNCF | f, d, a | Rotate Right f (No Carry) | 1 | 0100 | 00da | ffff | ffff | Z, N | |
| SETF | f, a | Set f | 1 | 0110 | 100a | ffff | ffff | None | |
| SUBFWB | f, d, a | Subtract f from WREG with borrow | 1 | 0101 | 01da | ffff | ffff | C, DC, Z, OV, N | 1, 2 |
| SUBWF | f, d, a | Subtract WREG from f | 1 | 0101 | 11da | ffff | ffff | C, DC, Z, OV, N | |
| SUBWFB | f, d, a | Subtract WREG from f with borrow | 1 | 0101 | 10da | ffff | ffff | C, DC, Z, OV, N | 1, 2 |
| SWAPF | f, d, a | Swap nibbles in f | 1 | 0011 | 10da | ffff | ffff | None | 4 |
| TSTFSZ | f, a | Test f, skip if 0 | 1 (2 or 3) | 0110 | 011a | ffff | ffff | None | 1, 2 |
| XORWF | f, d, a | Exclusive OR WREG with f | 1 | 0001 | 10da | ffff | ffff | Z, N | |
| **BIT-ORIENTED FILE REGISTER OPERATIONS** | | | | | | | | | |
| BCF | f, b, a | Bit Clear f | 1 | 1001 | bbba | ffff | ffff | None | 1, 2 |
| BSF | f, b, a | Bit Set f | 1 | 1000 | bbba | ffff | ffff | None | 1, 2 |
| BTFSC | f, b, a | Bit Test f, Skip if Clear | 1 (2 or 3) | 1011 | bbba | ffff | ffff | None | 3, 4 |
| BTFSS | f, b, a | Bit Test f, Skip if Set | 1 (2 or 3) | 1010 | bbba | ffff | ffff | None | 3, 4 |
| BTG | f, d, a | Bit Toggle f | 1 | 0111 | bbba | ffff | ffff | None | 1, 2 |

**Note 1:** When a PORT register is modified as a function of itself (e.g., `MOVF PORTB, 1, 0`), the value used will be that value present on the pins themselves. For example, if the data latch is '1' for a pin configured as input and is driven low by an external device, the data will be written back with a '0'.

**2:** If this instruction is executed on the TMR0 register (and, where applicable, d = 1), the prescaler will be cleared if assigned.

**3:** If Program Counter (PC) is modified or a conditional test is true, the instruction requires two cycles. The second cycle is executed as a `NOP`.

**4:** Some instructions are 2-word instructions. The second word of these instructions will be executed as a `NOP`, unless the first word of the instruction retrieves the information embedded in these 16-bits. This ensures that all program memory locations have a valid instruction.

**5:** If the Table Write starts the write cycle to internal memory, the write will continue until terminated.


© 2006 Microchip Technology Inc.

## TABLE 20-2: PIC18FXXX INSTRUCTION SET (CONTINUED)

| Mnemonic, Operands | | Description | Cycles | 16-Bit Instruction Word MSb | | | LSb | Status Affected | Notes |
|---|---|---|---|---|---|---|---|---|---|
| **CONTROL OPERATIONS** | | | | | | | | | |
| BC | n | Branch if Carry | 1 (2) | 1110 | 0010 | nnnn | nnnn | None | |
| BN | n | Branch if Negative | 1 (2) | 1110 | 0110 | nnnn | nnnn | None | |
| BNC | n | Branch if Not Carry | 1 (2) | 1110 | 0011 | nnnn | nnnn | None | |
| BNN | n | Branch if Not Negative | 1 (2) | 1110 | 0111 | nnnn | nnnn | None | |
| BNOV | n | Branch if Not Overflow | 1 (2) | 1110 | 0101 | nnnn | nnnn | None | |
| BNZ | n | Branch if Not Zero | 2 | 1110 | 0001 | nnnn | nnnn | None | |
| BOV | n | Branch if Overflow | 1 (2) | 1110 | 0100 | nnnn | nnnn | None | |
| BRA | n | Branch Unconditionally | 1 (2) | 1101 | 0nnn | nnnn | nnnn | None | |
| BZ | n | Branch if Zero | 1 (2) | 1110 | 0000 | nnnn | nnnn | None | |
| CALL | n, s | Call subroutine1st word | 2 | 1110 | 110s | kkkk | kkkk | None | |
| | | 2nd word | | 1111 | kkkk | kkkk | kkkk | | |
| CLRWDT | — | Clear Watchdog Timer | 1 | 0000 | 0000 | 0000 | 0100 | $\overline{TO}$, $\overline{PD}$ | |
| DAW | — | Decimal Adjust WREG | 1 | 0000 | 0000 | 0000 | 0111 | C | |
| GOTO | n | Go to address1st word | 2 | 1110 | 1111 | kkkk | kkkk | None | |
| | | 2nd word | | 1111 | kkkk | kkkk | kkkk | | |
| NOP | — | No Operation | 1 | 0000 | 0000 | 0000 | 0000 | None | |
| NOP | — | No Operation | 1 | 1111 | xxxx | xxxx | xxxx | None | 4 |
| POP | — | Pop top of return stack (TOS) | 1 | 0000 | 0000 | 0000 | 0110 | None | |
| PUSH | — | Push top of return stack (TOS) | 1 | 0000 | 0000 | 0000 | 0101 | None | |
| RCALL | n | Relative Call | 2 | 1101 | 1nnn | nnnn | nnnn | None | |
| RESET | | Software device RESET | 1 | 0000 | 0000 | 1111 | 1111 | All | |
| RETFIE | s | Return from interrupt enable | 2 | 0000 | 0000 | 0001 | 000s | GIE/GIEH, PEIE/GIEL | |
| RETLW | k | Return with literal in WREG | 2 | 0000 | 1100 | kkkk | kkkk | None | |
| RETURN | s | Return from Subroutine | 2 | 0000 | 0000 | 0001 | 001s | None | |
| SLEEP | — | Go into Standby mode | 1 | 0000 | 0000 | 0000 | 0011 | $\overline{TO}$, $\overline{PD}$ | |

**Note 1:** When a PORT register is modified as a function of itself (e.g., `MOVF PORTB, 1, 0`), the value used will be that value present on the pins themselves. For example, if the data latch is '1' for a pin configured as input and is driven low by an external device, the data will be written back with a '0'.

**2:** If this instruction is executed on the TMR0 register (and, where applicable, d = 1), the prescaler will be cleared if assigned.

**3:** If Program Counter (PC) is modified or a conditional test is true, the instruction requires two cycles. The second cycle is executed as a `NOP`.

**4:** Some instructions are 2-word instructions. The second word of these instructions will be executed as a `NOP`, unless the first word of the instruction retrieves the information embedded in these 16-bits. This ensures that all program memory locations have a valid instruction.

**5:** If the Table Write starts the write cycle to internal memory, the write will continue until terminated.

## TABLE 20-2: PIC18FXXX INSTRUCTION SET (CONTINUED)

| Mnemonic, Operands | | Description | Cycles | 16-Bit Instruction Word MSb | | | LSb | Status Affected | Notes |
|---|---|---|---|---|---|---|---|---|---|
| **LITERAL OPERATIONS** | | | | | | | | | |
| ADDLW | k | Add literal and WREG | 1 | 0000 | 1111 | kkkk | kkkk | C, DC, Z, OV, N | |
| ANDLW | k | AND literal with WREG | 1 | 0000 | 1011 | kkkk | kkkk | Z, N | |
| IORLW | k | Inclusive OR literal with WREG | 1 | 0000 | 1001 | kkkk | kkkk | Z, N | |
| LFSR | f, k | Move literal (12-bit) 2nd word | 2 | 1110 | 1110 | 00ff | kkkk | None | |
| | | to FSRx 1st word | | 1111 | 0000 | kkkk | kkkk | | |
| MOVLB | k | Move literal to BSR<3:0> | 1 | 0000 | 0001 | 0000 | kkkk | None | |
| MOVLW | k | Move literal to WREG | 1 | 0000 | 1110 | kkkk | kkkk | None | |
| MULLW | k | Multiply literal with WREG | 1 | 0000 | 1101 | kkkk | kkkk | None | |
| RETLW | k | Return with literal in WREG | 2 | 0000 | 1100 | kkkk | kkkk | None | |
| SUBLW | k | Subtract WREG from literal | 1 | 0000 | 1000 | kkkk | kkkk | C, DC, Z, OV, N | |
| XORLW | k | Exclusive OR literal with WREG | 1 | 0000 | 1010 | kkkk | kkkk | Z, N | |
| **DATA MEMORY ↔ PROGRAM MEMORY OPERATIONS** | | | | | | | | | |
| TBLRD* | | Table Read | 2 | 0000 | 0000 | 0000 | 1000 | None | |
| TBLRD*+ | | Table Read with post-increment | | 0000 | 0000 | 0000 | 1001 | None | |
| TBLRD*- | | Table Read with post-decrement | | 0000 | 0000 | 0000 | 1010 | None | |
| TBLRD+* | | Table Read with pre-increment | | 0000 | 0000 | 0000 | 1011 | None | |
| TBLWT* | | Table Write | 2 (5) | 0000 | 0000 | 0000 | 1100 | None | |
| TBLWT*+ | | Table Write with post-increment | | 0000 | 0000 | 0000 | 1101 | None | |
| TBLWT*- | | Table Write with post-decrement | | 0000 | 0000 | 0000 | 1110 | None | |
| TBLWT+* | | Table Write with pre-increment | | 0000 | 0000 | 0000 | 1111 | None | |

**Note 1:** When a PORT register is modified as a function of itself (e.g., `MOVF PORTB, 1, 0`), the value used will be that value present on the pins themselves. For example, if the data latch is '1' for a pin configured as input and is driven low by an external device, the data will be written back with a '0'.

**2:** If this instruction is executed on the TMR0 register (and, where applicable, d = 1), the prescaler will be cleared if assigned.

**3:** If Program Counter (PC) is modified or a conditional test is true, the instruction requires two cycles. The second cycle is executed as a `NOP`.

**4:** Some instructions are 2-word instructions. The second word of these instructions will be executed as a `NOP`, unless the first word of the instruction retrieves the information embedded in these 16-bits. This ensures that all program memory locations have a valid instruction.

**5:** If the Table Write starts the write cycle to internal memory, the write will continue until terminated.


© 2006 Microchip Technology Inc.

## 20.1 Instruction Set

**ADDLW** **ADD literal to W**

| | |
|---|---|
| Syntax: | [ *label* ] ADDLW k |
| Operands: | $0 \le k \le 255$ |
| Operation: | (W) + k → W |
| Status Affected: | N, OV, C, DC, Z |
| Encoding: | 0000 \| 1111 \| kkkk \| kkkk |
| Description: | The contents of W are added to the 8-bit literal 'k' and the result is placed in W. |
| Words: | 1 |
| Cycles: | 1 |

Q Cycle Activity:

| Q1 | Q2 | Q3 | Q4 |
|---|---|---|---|
| Decode | Read literal 'k' | Process Data | Write to W |

Example: `ADDLW 0x15`

Before Instruction
W = 0x10
After Instruction
W = 0x25

**ADDWF** **ADD W to f**

| | |
|---|---|
| Syntax: | [ *label* ] ADDWF f [,d [,a] |
| Operands: | $0 \le f \le 255$<br>$d \in [0,1]$<br>$a \in [0,1]$ |
| Operation: | (W) + (f) → dest |
| Status Affected: | N, OV, C, DC, Z |
| Encoding: | 0010 \| 01da \| ffff \| ffff |
| Description: | Add W to register 'f'. If 'd' is 0, the result is stored in W. If 'd' is 1, the result is stored back in register 'f' (default). If 'a' is 0, the Access Bank will be selected. If 'a' is 1, the BSR is used. |
| Words: | 1 |
| Cycles: | 1 |

Q Cycle Activity:

| Q1 | Q2 | Q3 | Q4 |
|---|---|---|---|
| Decode | Read register 'f' | Process Data | Write to destination |

Example: `ADDWF REG, 0, 0`

Before Instruction
W = 0x17
REG = 0xC2
After Instruction
W = 0xD9
REG = 0xC2

## ADDWFC — ADD W and Carry bit to f

| | |
|---|---|
| Syntax: | [ *label* ] ADDWFC f [,d [,a] |
| Operands: | $0 \le f \le 255$<br>$d \in [0,1]$<br>$a \in [0,1]$ |
| Operation: | (W) + (f) + (C) → dest |
| Status Affected: | N,OV, C, DC, Z |
| Encoding: | 0010 \| 00da \| ffff \| ffff |
| Description: | Add W, the Carry Flag and data memory location 'f'. If 'd' is 0, the result is placed in W. If 'd' is 1, the result is placed in data memory location 'f'. If 'a' is 0, the Access Bank will be selected. If 'a' is 1, the BSR will not be overridden. |
| Words: | 1 |
| Cycles: | 1 |

Q Cycle Activity:

| Q1 | Q2 | Q3 | Q4 |
|---|---|---|---|
| Decode | Read register 'f' | Process Data | Write to destination |

Example: `ADDWFC REG, 0, 1`

Before Instruction
- Carry bit = 1
- REG = 0x02
- W = 0x4D

After Instruction
- Carry bit = 0
- REG = 0x02
- W = 0x50

## ANDLW — AND literal with W

| | |
|---|---|
| Syntax: | [ *label* ] ANDLW k |
| Operands: | $0 \le k \le 255$ |
| Operation: | (W) .AND. k → W |
| Status Affected: | N,Z |
| Encoding: | 0000 \| 1011 \| kkkk \| kkkk |
| Description: | The contents of W are ANDed with the 8-bit literal 'k'. The result is placed in W. |
| Words: | 1 |
| Cycles: | 1 |

Q Cycle Activity:

| Q1 | Q2 | Q3 | Q4 |
|---|---|---|---|
| Decode | Read literal 'k' | Process Data | Write to W |

Example: `ANDLW 0x5F`

Before Instruction
- W = 0xA3

After Instruction
- W = 0x03


© 2006 Microchip Technology Inc.

## ANDWF — AND W with f

| | |
|---|---|
| Syntax: | [ *label* ] ANDWF f [,d [,a] |
| Operands: | $0 \le f \le 255$<br>$d \in [0,1]$<br>$a \in [0,1]$ |
| Operation: | (W) .AND. (f) → dest |
| Status Affected: | N,Z |
| Encoding: | 0001 \| 01da \| ffff \| ffff |
| Description: | The contents of W are AND'ed with register 'f'. If 'd' is 0, the result is stored in W. If 'd' is 1, the result is stored back in register 'f' (default). If 'a' is 0, the Access Bank will be selected. If 'a' is 1, the BSR will not be overridden (default). |
| Words: | 1 |
| Cycles: | 1 |

Q Cycle Activity:

| Q1 | Q2 | Q3 | Q4 |
|---|---|---|---|
| Decode | Read register 'f' | Process Data | Write to destination |

Example: `ANDWF REG, 0, 0`

Before Instruction
W = 0x17
REG = 0xC2

After Instruction
W = 0x02
REG = 0xC2

## BC — Branch if Carry

| | |
|---|---|
| Syntax: | [ *label* ] BC n |
| Operands: | $-128 \le n \le 127$ |
| Operation: | if carry bit is '1'<br>(PC) + 2 + 2n → PC |
| Status Affected: | None |
| Encoding: | 1110 \| 0010 \| nnnn \| nnnn |
| Description: | If the Carry bit is '1', then the program will branch.<br>The 2's complement number '2n' is added to the PC. Since the PC will have incremented to fetch the next instruction, the new address will be PC+2+2n. This instruction is then a two-cycle instruction. |
| Words: | 1 |
| Cycles: | 1(2) |

Q Cycle Activity:
If Jump:

| Q1 | Q2 | Q3 | Q4 |
|---|---|---|---|
| Decode | Read literal 'n' | Process Data | Write to PC |
| No operation | No operation | No operation | No operation |

If No Jump:

| Q1 | Q2 | Q3 | Q4 |
|---|---|---|---|
| Decode | Read literal 'n' | Process Data | No operation |

Example: `HERE BC 5`

Before Instruction
PC = address (HERE)

After Instruction
If Carry = 1;
PC = address (HERE+12)
If Carry = 0;
PC = address (HERE+2)

## BCF — Bit Clear f

Syntax: [ *label* ] BCF f,b[,a]

Operands: $0 \le f \le 255$
$0 \le b \le 7$
$a \in [0,1]$

Operation: $0 \rightarrow f<b>$

Status Affected: None

Encoding:

| 1001 | bbba | ffff | ffff |
|---|---|---|---|

Description: Bit 'b' in register 'f' is cleared. If 'a' is 0, the Access Bank will be selected, overriding the BSR value. If 'a' = 1, then the bank will be selected as per the BSR value (default).

Words: 1

Cycles: 1

Q Cycle Activity:

| Q1 | Q2 | Q3 | Q4 |
|---|---|---|---|
| Decode | Read register 'f' | Process Data | Write register 'f' |

Example: `BCF FLAG_REG, 7, 0`

Before Instruction
FLAG_REG = 0xC7
After Instruction
FLAG_REG = 0x47

## BN — Branch if Negative

Syntax: [ *label* ] BN n

Operands: $-128 \le n \le 127$

Operation: if negative bit is '1'
(PC) + 2 + 2n → PC

Status Affected: None

Encoding:

| 1110 | 0110 | nnnn | nnnn |
|---|---|---|---|

Description: If the Negative bit is '1', then the program will branch.
The 2's complement number '2n' is added to the PC. Since the PC will have incremented to fetch the next instruction, the new address will be PC+2+2n. This instruction is then a two-cycle instruction.

Words: 1

Cycles: 1(2)

Q Cycle Activity:
If Jump:

| Q1 | Q2 | Q3 | Q4 |
|---|---|---|---|
| Decode | Read literal 'n' | Process Data | Write to PC |
| No operation | No operation | No operation | No operation |

If No Jump:

| Q1 | Q2 | Q3 | Q4 |
|---|---|---|---|
| Decode | Read literal 'n' | Process Data | No operation |

Example: `HERE BN Jump`

Before Instruction
PC = address (HERE)
After Instruction
If Negative = 1;
PC = address (Jump)
If Negative = 0;
PC = address (HERE+2)


© 2006 Microchip Technology Inc.

## BNC — Branch if Not Carry

| | |
|---|---|
| Syntax: | [ *label* ] BNC n |
| Operands: | -128 ≤ n ≤ 127 |
| Operation: | if carry bit is '0'<br>(PC) + 2 + 2n → PC |
| Status Affected: | None |
| Encoding: | 1110 \| 0011 \| nnnn \| nnnn |
| Description: | If the Carry bit is '0', then the program will branch.<br>The 2's complement number '2n' is added to the PC. Since the PC will have incremented to fetch the next instruction, the new address will be PC+2+2n. This instruction is then a two-cycle instruction. |
| Words: | 1 |
| Cycles: | 1(2) |

Q Cycle Activity:

If Jump:

| Q1 | Q2 | Q3 | Q4 |
|---|---|---|---|
| Decode | Read literal 'n' | Process Data | Write to PC |
| No operation | No operation | No operation | No operation |

If No Jump:

| Q1 | Q2 | Q3 | Q4 |
|---|---|---|---|
| Decode | Read literal 'n' | Process Data | No operation |

Example: `HERE BNC Jump`

Before Instruction
PC = address (HERE)

After Instruction
If Carry = 0;
PC = address (Jump)
If Carry = 1;
PC = address (HERE+2)

## BNN — Branch if Not Negative

| | |
|---|---|
| Syntax: | [ *label* ] BNN n |
| Operands: | -128 ≤ n ≤ 127 |
| Operation: | if negative bit is '0'<br>(PC) + 2 + 2n → PC |
| Status Affected: | None |
| Encoding: | 1110 \| 0111 \| nnnn \| nnnn |
| Description: | If the Negative bit is '0', then the program will branch.<br>The 2's complement number '2n' is added to the PC. Since the PC will have incremented to fetch the next instruction, the new address will be PC+2+2n. This instruction is then a two-cycle instruction. |
| Words: | 1 |
| Cycles: | 1(2) |

Q Cycle Activity:

If Jump:

| Q1 | Q2 | Q3 | Q4 |
|---|---|---|---|
| Decode | Read literal 'n' | Process Data | Write to PC |
| No operation | No operation | No operation | No operation |

If No Jump:

| Q1 | Q2 | Q3 | Q4 |
|---|---|---|---|
| Decode | Read literal 'n' | Process Data | No operation |

Example: `HERE BNN Jump`

Before Instruction
PC = address (HERE)

After Instruction
If Negative = 0;
PC = address (Jump)
If Negative = 1;
PC = address (HERE+2)

© 2006 Microchip Technology Inc.

## BNOV — Branch if Not Overflow

| | |
|---|---|
| Syntax: | [ *label* ] BNOV n |
| Operands: | -128 ≤ n ≤ 127 |
| Operation: | if overflow bit is '0'<br>(PC) + 2 + 2n → PC |
| Status Affected: | None |
| Encoding: | 1110 \| 0101 \| nnnn \| nnnn |
| Description: | If the Overflow bit is '0', then the program will branch.<br>The 2's complement number '2n' is added to the PC. Since the PC will have incremented to fetch the next instruction, the new address will be PC+2+2n. This instruction is then a two-cycle instruction. |
| Words: | 1 |
| Cycles: | 1(2) |

Q Cycle Activity:

If Jump:

| Q1 | Q2 | Q3 | Q4 |
|---|---|---|---|
| Decode | Read literal 'n' | Process Data | Write to PC |
| No operation | No operation | No operation | No operation |

If No Jump:

| Q1 | Q2 | Q3 | Q4 |
|---|---|---|---|
| Decode | Read literal 'n' | Process Data | No operation |

Example: `HERE BNOV Jump`

Before Instruction
PC = address (HERE)

After Instruction
If Overflow = 0;
PC = address (Jump)
If Overflow = 1;
PC = address (HERE+2)

## BNZ — Branch if Not Zero

| | |
|---|---|
| Syntax: | [ *label* ] BNZ n |
| Operands: | -128 ≤ n ≤ 127 |
| Operation: | if zero bit is '0'<br>(PC) + 2 + 2n → PC |
| Status Affected: | None |
| Encoding: | 1110 \| 0001 \| nnnn \| nnnn |
| Description: | If the Zero bit is '0', then the program will branch.<br>The 2's complement number '2n' is added to the PC. Since the PC will have incremented to fetch the next instruction, the new address will be PC+2+2n. This instruction is then a two-cycle instruction. |
| Words: | 1 |
| Cycles: | 1(2) |

Q Cycle Activity:

If Jump:

| Q1 | Q2 | Q3 | Q4 |
|---|---|---|---|
| Decode | Read literal 'n' | Process Data | Write to PC |
| No operation | No operation | No operation | No operation |

If No Jump:

| Q1 | Q2 | Q3 | Q4 |
|---|---|---|---|
| Decode | Read literal 'n' | Process Data | No operation |

Example: `HERE BNZ Jump`

Before Instruction
PC = address (HERE)

After Instruction
If Zero = 0;
PC = address (Jump)
If Zero = 1;
PC = address (HERE+2)


© 2006 Microchip Technology Inc.

## BRA — Unconditional Branch

| | |
|---|---|
| Syntax: | [ *label* ] BRA n |
| Operands: | -1024 ≤ n ≤ 1023 |
| Operation: | (PC) + 2 + 2n → PC |
| Status Affected: | None |
| Encoding: | 1101 \| 0nnn \| nnnn \| nnnn |
| Description: | Add the 2's complement number '2n' to the PC. Since the PC will have incremented to fetch the next instruction, the new address will be PC+2+2n. This instruction is a two-cycle instruction. |
| Words: | 1 |
| Cycles: | 2 |

Q Cycle Activity:

| Q1 | Q2 | Q3 | Q4 |
|---|---|---|---|
| Decode | Read literal 'n' | Process Data | Write to PC |
| No operation | No operation | No operation | No operation |

Example: `HERE BRA Jump`

Before Instruction
PC = address (HERE)
After Instruction
PC = address (Jump)

## BSF — Bit Set f

| | |
|---|---|
| Syntax: | [ *label* ] BSF f,b[,a] |
| Operands: | 0 ≤ f ≤ 255<br>0 ≤ b ≤ 7<br>a ∈ [0,1] |
| Operation: | 1 → f<b> |
| Status Affected: | None |
| Encoding: | 1000 \| bbba \| ffff \| ffff |
| Description: | Bit 'b' in register 'f' is set. If 'a' is 0 Access Bank will be selected, overriding the BSR value. If 'a' = 1, then the bank will be selected as per the BSR value. |
| Words: | 1 |
| Cycles: | 1 |

Q Cycle Activity:

| Q1 | Q2 | Q3 | Q4 |
|---|---|---|---|
| Decode | Read register 'f' | Process Data | Write register 'f' |

Example: `BSF FLAG_REG, 7, 1`

Before Instruction
FLAG_REG = 0x0A
After Instruction
FLAG_REG = 0x8A

## BTFSC — Bit Test File, Skip if Clear

Syntax: [ *label* ] BTFSC f,b[,a]

Operands: $0 \le f \le 255$
$0 \le b \le 7$
$a \in [0,1]$

Operation: skip if (f<b>) = 0

Status Affected: None

Encoding:

| 1011 | bbba | ffff | ffff |
|---|---|---|---|

Description: If bit 'b' in register 'f' is 0, then the next instruction is skipped.
If bit 'b' is 0, then the next instruction fetched during the current instruction execution is discarded, and a NOP is executed instead, making this a two-cycle instruction. If 'a' is 0, the Access Bank will be selected, overriding the BSR value. If 'a' = 1, then the bank will be selected as per the BSR value (default).

Words: 1

Cycles: 1(2)
**Note:** 3 cycles if skip and followed by a 2-word instruction.

Q Cycle Activity:

| Q1 | Q2 | Q3 | Q4 |
|---|---|---|---|
| Decode | Read register 'f' | Process Data | No operation |

If skip:

| Q1 | Q2 | Q3 | Q4 |
|---|---|---|---|
| No operation | No operation | No operation | No operation |

If skip and followed by 2-word instruction:

| Q1 | Q2 | Q3 | Q4 |
|---|---|---|---|
| No operation | No operation | No operation | No operation |
| No operation | No operation | No operation | No operation |

Example:

```
HERE    BTFSC    FLAG, 1, 0
FALSE   :
TRUE    :
```

Before Instruction
PC = address (HERE)
After Instruction
If FLAG<1> = 0;
PC = address (TRUE)
If FLAG<1> = 1;
PC = address (FALSE)

## BTFSS — Bit Test File, Skip if Set

Syntax: [ *label* ] BTFSS f,b[,a]

Operands: $0 \le f \le 255$
$0 \le b \le 7$
$a \in [0,1]$

Operation: skip if (f<b>) = 1

Status Affected: None

Encoding:

| 1010 | bbba | ffff | ffff |
|---|---|---|---|

Description: If bit 'b' in register 'f' is 1, then the next instruction is skipped.
If bit 'b' is 1, then the next instruction fetched during the current instruction execution, is discarded and a NOP is executed instead, making this a two-cycle instruction. If 'a' is 0, the Access Bank will be selected, overriding the BSR value. If 'a' = 1, then the bank will be selected as per the BSR value (default).

Words: 1

Cycles: 1(2)
**Note:** 3 cycles if skip and followed by a 2-word instruction.

Q Cycle Activity:

| Q1 | Q2 | Q3 | Q4 |
|---|---|---|---|
| Decode | Read register 'f' | Process Data | No operation |

If skip:

| Q1 | Q2 | Q3 | Q4 |
|---|---|---|---|
| No operation | No operation | No operation | No operation |

If skip and followed by 2-word instruction:

| Q1 | Q2 | Q3 | Q4 |
|---|---|---|---|
| No operation | No operation | No operation | No operation |
| No operation | No operation | No operation | No operation |

Example:

```
HERE    BTFSS    FLAG, 1, 0
FALSE   :
TRUE    :
```

Before Instruction
PC = address (HERE)
After Instruction
If FLAG<1> = 0;
PC = address (FALSE)
If FLAG<1> = 1;
PC = address (TRUE)


© 2006 Microchip Technology Inc.

## BTG — Bit Toggle f

| | |
|---|---|
| Syntax: | [ *label* ] BTG f,b[,a] |
| Operands: | $0 \le f \le 255$<br>$0 \le b \le 7$<br>$a \in [0,1]$ |
| Operation: | $(\overline{f<b>}) \rightarrow f<b>$ |
| Status Affected: | None |
| Encoding: | 0111 \| bbba \| ffff \| ffff |
| Description: | Bit 'b' in data memory location 'f' is inverted. If 'a' is 0, the Access Bank will be selected, overriding the BSR value. If 'a' = 1, then the bank will be selected as per the BSR value (default). |
| Words: | 1 |
| Cycles: | 1 |

Q Cycle Activity:

| Q1 | Q2 | Q3 | Q4 |
|---|---|---|---|
| Decode | Read register 'f' | Process Data | Write register 'f' |

Example: `BTG PORTC, 4, 0`

Before Instruction:
PORTC = 0111 0101 [0x75]

After Instruction:
PORTC = 0110 0101 [0x65]

## BOV — Branch if Overflow

| | |
|---|---|
| Syntax: | [ *label* ] BOV n |
| Operands: | $-128 \le n \le 127$ |
| Operation: | if overflow bit is '1'<br>$(PC) + 2 + 2n \rightarrow PC$ |
| Status Affected: | None |
| Encoding: | 1110 \| 0100 \| nnnn \| nnnn |
| Description: | If the Overflow bit is '1', then the program will branch.<br>The 2's complement number '2n' is added to the PC. Since the PC will have incremented to fetch the next instruction, the new address will be PC+2+2n. This instruction is then a two-cycle instruction. |
| Words: | 1 |
| Cycles: | 1(2) |

Q Cycle Activity:
If Jump:

| Q1 | Q2 | Q3 | Q4 |
|---|---|---|---|
| Decode | Read literal 'n' | Process Data | Write to PC |
| No operation | No operation | No operation | No operation |

If No Jump:

| Q1 | Q2 | Q3 | Q4 |
|---|---|---|---|
| Decode | Read literal 'n' | Process Data | No operation |

Example: `HERE BOV Jump`

Before Instruction
PC = address (HERE)

After Instruction
If Overflow = 1;
PC = address (Jump)
If Overflow = 0;
PC = address (HERE+2)

## BZ — Branch if Zero

| | |
|---|---|
| Syntax: | [ *label* ] BZ n |
| Operands: | $-128 \le n \le 127$ |
| Operation: | if Zero bit is '1'<br>(PC) + 2 + 2n → PC |
| Status Affected: | None |
| Encoding: | 1110 \| 0000 \| nnnn \| nnnn |
| Description: | If the Zero bit is '1', then the program will branch.<br>The 2's complement number '2n' is added to the PC. Since the PC will have incremented to fetch the next instruction, the new address will be PC+2+2n. This instruction is then a two-cycle instruction. |
| Words: | 1 |
| Cycles: | 1(2) |

Q Cycle Activity:

If Jump:

| Q1 | Q2 | Q3 | Q4 |
|---|---|---|---|
| Decode | Read literal 'n' | Process Data | Write to PC |
| No operation | No operation | No operation | No operation |

If No Jump:

| Q1 | Q2 | Q3 | Q4 |
|---|---|---|---|
| Decode | Read literal 'n' | Process Data | No operation |

Example: `HERE BZ Jump`

Before Instruction
PC = address (HERE)

After Instruction
If Zero = 1;
PC = address (Jump)
If Zero = 0;
PC = address (HERE+2)

## CALL — Subroutine Call

| | |
|---|---|
| Syntax: | [ *label* ] CALL k [,s] |
| Operands: | $0 \le k \le 1048575$<br>$s \in [0,1]$ |
| Operation: | (PC) + 4 → TOS,<br>k → PC<20:1>,<br>if s = 1<br>(W) → WS,<br>(STATUS) → STATUSS,<br>(BSR) → BSRS |
| Status Affected: | None |
| Encoding: | 1st word (k<7:0>): 1110 \| 110s \| $k_7$kkk \| kkkk$_0$<br>2nd word(k<19:8>): 1111 \| $k_{19}$kkk \| kkkk \| kkkk$_8$ |
| Description: | Subroutine call of entire 2 Mbyte memory range. First, return address (PC+ 4) is pushed onto the return stack. If 's' = 1, the W, STATUS and BSR registers are also pushed into their respective shadow registers, WS, STATUSS and BSRS. If 's' = 0, no update occurs (default). Then, the 20-bit value 'k' is loaded into PC<20:1>. CALL is a two-cycle instruction. |
| Words: | 2 |
| Cycles: | 2 |

Q Cycle Activity:

| Q1 | Q2 | Q3 | Q4 |
|---|---|---|---|
| Decode | Read literal 'k'<7:0>, | Push PC to stack | Read literal 'k'<19:8>, Write to PC |
| No operation | No operation | No operation | No operation |

Example: `HERE CALL THERE,1`

Before Instruction
PC = address (HERE)

After Instruction
PC = address (THERE)
TOS = address (HERE + 4)
WS = W
BSRS = BSR
STATUSS= STATUS


© 2006 Microchip Technology Inc.

## CLRF — Clear f

| | |
|---|---|
| Syntax: | [ *label* ] CLRF f [,a] |
| Operands: | $0 \le f \le 255$<br>$a \in [0,1]$ |
| Operation: | 000h → f<br>1 → Z |
| Status Affected: | Z |
| Encoding: | 0110 \| 101a \| ffff \| ffff |
| Description: | Clears the contents of the specified register. If 'a' is 0, the Access Bank will be selected, overriding the BSR value. If 'a' = 1, then the bank will be selected as per the BSR value (default). |
| Words: | 1 |
| Cycles: | 1 |

Q Cycle Activity:

| Q1 | Q2 | Q3 | Q4 |
|---|---|---|---|
| Decode | Read register 'f' | Process Data | Write register 'f' |

Example: `CLRF FLAG_REG,1`

Before Instruction
FLAG_REG = 0x5A
After Instruction
FLAG_REG = 0x00

## CLRWDT — Clear Watchdog Timer

| | |
|---|---|
| Syntax: | [ *label* ] CLRWDT |
| Operands: | None |
| Operation: | 000h → WDT,<br>000h → WDT postscaler,<br>1 → $\overline{TO}$,<br>1 → $\overline{PD}$ |
| Status Affected: | $\overline{TO}$, $\overline{PD}$ |
| Encoding: | 0000 \| 0000 \| 0000 \| 0100 |
| Description: | `CLRWDT` instruction resets the Watchdog Timer. It also resets the postscaler of the WDT. Status bits $\overline{TO}$ and $\overline{PD}$ are set. |
| Words: | 1 |
| Cycles: | 1 |

Q Cycle Activity:

| Q1 | Q2 | Q3 | Q4 |
|---|---|---|---|
| Decode | No operation | Process Data | No operation |

Example: `CLRWDT`

Before Instruction
WDT Counter = ?
After Instruction
WDT Counter = 0x00
WDT Postscaler = 0
$\overline{TO}$ = 1
$\overline{PD}$ = 1

## COMF — Complement f

Syntax: [ *label* ] COMF f [,d [,a]

Operands: $0 \le f \le 255$
$d \in [0,1]$
$a \in [0,1]$

Operation: $(\overline{f}) \rightarrow$ dest

Status Affected: N, Z

Encoding:

| 0001 | 11da | ffff | ffff |
|---|---|---|---|

Description: The contents of register 'f' are complemented. If 'd' is 0, the result is stored in W. If 'd' is 1, the result is stored back in register 'f' (default). If 'a' is 0, the Access Bank will be selected, overriding the BSR value. If 'a' = 1, then the bank will be selected as per the BSR value (default).

Words: 1

Cycles: 1

Q Cycle Activity:

| Q1 | Q2 | Q3 | Q4 |
|---|---|---|---|
| Decode | Read register 'f' | Process Data | Write to destination |

Example: `COMF REG, 0, 0`

Before Instruction
REG = 0x13
After Instruction
REG = 0x13
W = 0xEC

## CPFSEQ — Compare f with W, skip if f = W

Syntax: [ *label* ] CPFSEQ f [,a]

Operands: $0 \le f \le 255$
$a \in [0,1]$

Operation: (f) – (W),
skip if (f) = (W)
(unsigned comparison)

Status Affected: None

Encoding:

| 0110 | 001a | ffff | ffff |
|---|---|---|---|

Description: Compares the contents of data memory location 'f' to the contents of W by performing an unsigned subtraction.
If 'f' = W, then the fetched instruction is discarded and a `NOP` is executed instead, making this a two-cycle instruction. If 'a' is 0, the Access Bank will be selected, overriding the BSR value. If 'a' = 1, then the bank will be selected as per the BSR value (default).

Words: 1

Cycles: 1(2)
**Note:** 3 cycles if skip and followed by a 2-word instruction.

Q Cycle Activity:

| Q1 | Q2 | Q3 | Q4 |
|---|---|---|---|
| Decode | Read register 'f' | Process Data | No operation |

If skip:

| Q1 | Q2 | Q3 | Q4 |
|---|---|---|---|
| No operation | No operation | No operation | No operation |

If skip and followed by 2-word instruction:

| Q1 | Q2 | Q3 | Q4 |
|---|---|---|---|
| No operation | No operation | No operation | No operation |
| No operation | No operation | No operation | No operation |

Example:
```
HERE     CPFSEQ REG, 0
NEQUAL   :
EQUAL    :
```

Before Instruction
PC Address = HERE
W = ?
REG = ?
After Instruction
If REG = W;
PC = Address (EQUAL)
If REG ≠ W;
PC = Address (NEQUAL)


© 2006 Microchip Technology Inc.

## CPFSGT — Compare f with W, skip if f > W

| | |
|---|---|
| Syntax: | [ *label* ] CPFSGT f [,a] |
| Operands: | $0 \le f \le 255$<br>$a \in [0,1]$ |
| Operation: | (f) – (W),<br>skip if (f) > (W)<br>(unsigned comparison) |
| Status Affected: | None |
| Encoding: | 0110 010a ffff ffff |
| Description: | Compares the contents of data memory location 'f' to the contents of the W by performing an unsigned subtraction.<br>If the contents of 'f' are greater than the contents of WREG, then the fetched instruction is discarded and a NOP is executed instead, making this a two-cycle instruction. If 'a' is 0, the Access Bank will be selected, overriding the BSR value. If 'a' = 1, then the bank will be selected as per the BSR value (default). |
| Words: | 1 |
| Cycles: | 1(2)<br>**Note:** 3 cycles if skip and followed by a 2-word instruction. |

Q Cycle Activity:

| Q1 | Q2 | Q3 | Q4 |
|---|---|---|---|
| Decode | Read register 'f' | Process Data | No operation |

If skip:

| Q1 | Q2 | Q3 | Q4 |
|---|---|---|---|
| No operation | No operation | No operation | No operation |

If skip and followed by 2-word instruction:

| Q1 | Q2 | Q3 | Q4 |
|---|---|---|---|
| No operation | No operation | No operation | No operation |
| No operation | No operation | No operation | No operation |

Example:

```
HERE      CPFSGT REG, 0
NGREATER  :
GREATER   :
```

Before Instruction
PC = Address (HERE)
W = ?

After Instruction
If REG > W;
PC = Address (GREATER)
If REG ≤ W;
PC = Address (NGREATER)

## CPFSLT — Compare f with W, skip if f < W

| | |
|---|---|
| Syntax: | [ *label* ] CPFSLT f [,a] |
| Operands: | $0 \le f \le 255$<br>$a \in [0,1]$ |
| Operation: | (f) – (W),<br>skip if (f) < (W)<br>(unsigned comparison) |
| Status Affected: | None |
| Encoding: | 0110 000a ffff ffff |
| Description: | Compares the contents of data memory location 'f' to the contents of W by performing an unsigned subtraction.<br>If the contents of 'f' are less than the contents of W, then the fetched instruction is discarded and a NOP is executed instead, making this a two-cycle instruction. If 'a' is 0, the Access Bank will be selected. If 'a' is 1, the BSR will not be overridden (default). |
| Words: | 1 |
| Cycles: | 1(2)<br>**Note:** 3 cycles if skip and followed by a 2-word instruction. |

Q Cycle Activity:

| Q1 | Q2 | Q3 | Q4 |
|---|---|---|---|
| Decode | Read register 'f' | Process Data | No operation |

If skip:

| Q1 | Q2 | Q3 | Q4 |
|---|---|---|---|
| No operation | No operation | No operation | No operation |

If skip and followed by 2-word instruction:

| Q1 | Q2 | Q3 | Q4 |
|---|---|---|---|
| No operation | No operation | No operation | No operation |
| No operation | No operation | No operation | No operation |

Example:

```
HERE    CPFSLT REG, 1
NLESS   :
LESS    :
```

Before Instruction
PC = Address (HERE)
W = ?

After Instruction
If REG < W;
PC = Address (LESS)
If REG ≥ W;
PC = Address (NLESS)

## DAW — Decimal Adjust W Register

Syntax: [ *label* ] DAW

Operands: None

Operation: If [W<3:0> >9] or [DC = 1] then
(W<3:0>) + 6 → W<3:0>;
else
(W<3:0>) → W<3:0>;

If [W<7:4> >9] or [C = 1] then
(W<7:4>) + 6 → W<7:4>;
else
(W<7:4>) → W<7:4>;

Status Affected: C

Encoding:

| 0000 | 0000 | 0000 | 0111 |
|---|---|---|---|

Description: DAW adjusts the eight-bit value in W, resulting from the earlier addition of two variables (each in packed BCD format) and produces a correct packed BCD result.

Words: 1

Cycles: 1

Q Cycle Activity:

| Q1 | Q2 | Q3 | Q4 |
|---|---|---|---|
| Decode | Read register W | Process Data | Write W |

Example1: DAW

Before Instruction
W = 0xA5
C = 0
DC = 0

After Instruction
W = 0x05
C = 1
DC = 0

Example 2:

Before Instruction
W = 0xCE
C = 0
DC = 0

After Instruction
W = 0x34
C = 1
DC = 0

## DECF — Decrement f

Syntax: [ *label* ] DECF f [,d [,a]

Operands: $0 \le f \le 255$
$d \in [0,1]$
$a \in [0,1]$

Operation: (f) – 1 → dest

Status Affected: C, DC, N, OV, Z

Encoding:

| 0000 | 01da | ffff | ffff |
|---|---|---|---|

Description: Decrement register 'f'. If 'd' is 0, the result is stored in W. If 'd' is 1, the result is stored back in register 'f' (default). If 'a' is 0, the Access Bank will be selected, overriding the BSR value. If 'a' = 1, then the bank will be selected as per the BSR value (default).

Words: 1

Cycles: 1

Q Cycle Activity:

| Q1 | Q2 | Q3 | Q4 |
|---|---|---|---|
| Decode | Read register 'f' | Process Data | Write to destination |

Example: DECF CNT, 1, 0

Before Instruction
CNT = 0x01
Z = 0

After Instruction
CNT = 0x00
Z = 1


© 2006 Microchip Technology Inc.

## DECFSZ — Decrement f, skip if 0

| | |
|---|---|
| Syntax: | [ *label* ] DECFSZ f [,d [,a]] |
| Operands: | $0 \le f \le 255$<br>$d \in [0,1]$<br>$a \in [0,1]$ |
| Operation: | (f) – 1 → dest,<br>skip if result = 0 |
| Status Affected: | None |
| Encoding: | `0010` `11da` `ffff` `ffff` |
| Description: | The contents of register 'f' are decremented. If 'd' is 0, the result is placed in W. If 'd' is 1, the result is placed back in register 'f' (default). If the result is 0, the next instruction, which is already fetched, is discarded, and a `NOP` is executed instead, making it a two-cycle instruction. If 'a' is 0, the Access Bank will be selected, overriding the BSR value. If 'a' = 1, then the bank will be selected as per the BSR value (default). |
| Words: | 1 |
| Cycles: | 1(2)<br>**Note:** 3 cycles if skip and followed by a 2-word instruction. |

Q Cycle Activity:

| Q1 | Q2 | Q3 | Q4 |
|---|---|---|---|
| Decode | Read register 'f' | Process Data | Write to destination |

If skip:

| Q1 | Q2 | Q3 | Q4 |
|---|---|---|---|
| No operation | No operation | No operation | No operation |

If skip and followed by 2-word instruction:

| Q1 | Q2 | Q3 | Q4 |
|---|---|---|---|
| No operation | No operation | No operation | No operation |
| No operation | No operation | No operation | No operation |

Example:

```
HERE      DECFSZ   CNT, 1, 1
          GOTO     LOOP
CONTINUE
```

Before Instruction
PC = Address (HERE)

After Instruction
CNT = CNT - 1
If CNT = 0;
PC = Address (CONTINUE)
If CNT ≠ 0;
PC = Address (HERE+2)

## DCFSNZ — Decrement f, skip if not 0

| | |
|---|---|
| Syntax: | [ *label* ] DCFSNZ f [,d [,a] |
| Operands: | $0 \le f \le 255$<br>$d \in [0,1]$<br>$a \in [0,1]$ |
| Operation: | (f) – 1 → dest,<br>skip if result ≠ 0 |
| Status Affected: | None |
| Encoding: | `0100` `11da` `ffff` `ffff` |
| Description: | The contents of register 'f' are decremented. If 'd' is 0, the result is placed in W. If 'd' is 1, the result is placed back in register 'f' (default). If the result is not 0, the next instruction, which is already fetched, is discarded, and a `NOP` is executed instead, making it a two-cycle instruction. If 'a' is 0, the Access Bank will be selected, overriding the BSR value. If 'a' = 1, then the bank will be selected as per the BSR value (default). |
| Words: | 1 |
| Cycles: | 1(2)<br>**Note:** 3 cycles if skip and followed by a 2-word instruction. |

Q Cycle Activity:

| Q1 | Q2 | Q3 | Q4 |
|---|---|---|---|
| Decode | Read register 'f' | Process Data | Write to destination |

If skip:

| Q1 | Q2 | Q3 | Q4 |
|---|---|---|---|
| No operation | No operation | No operation | No operation |

If skip and followed by 2-word instruction:

| Q1 | Q2 | Q3 | Q4 |
|---|---|---|---|
| No operation | No operation | No operation | No operation |
| No operation | No operation | No operation | No operation |

Example:

```
HERE     DCFSNZ  TEMP, 1, 0
ZERO     :
NZERO    :
```

Before Instruction
TEMP = ?

After Instruction
TEMP = TEMP - 1,
If TEMP = 0;
PC = Address (ZERO)
If TEMP ≠ 0;
PC = Address (NZERO)

## GOTO — Unconditional Branch

| | |
|---|---|
| Syntax: | [ *label* ] GOTO k |
| Operands: | $0 \le k \le 1048575$ |
| Operation: | k → PC<20:1> |
| Status Affected: | None |
| Encoding: 1st word (k<7:0>) 2nd word(k<19:8>) | 1110 / 1111 ; 1111 / $k_{19}$kkk ; $k_7$kkk / kkkk ; kkkk$_0$ / kkkk$_8$ |
| Description: | GOTO allows an unconditional branch anywhere within entire 2 Mbyte memory range. The 20-bit value 'k' is loaded into PC<20:1>. GOTO is always a two-cycle instruction. |
| Words: | 2 |
| Cycles: | 2 |

Q Cycle Activity:

| Q1 | Q2 | Q3 | Q4 |
|---|---|---|---|
| Decode | Read literal 'k'<7:0>, | No operation | Read literal 'k'<19:8>, Write to PC |
| No operation | No operation | No operation | No operation |

Example: `GOTO THERE`

After Instruction
PC = Address (THERE)

## INCF — Increment f

| | |
|---|---|
| Syntax: | [ *label* ] INCF f [,d [,a] |
| Operands: | $0 \le f \le 255$<br>$d \in [0,1]$<br>$a \in [0,1]$ |
| Operation: | (f) + 1 → dest |
| Status Affected: | C, DC, N, OV, Z |
| Encoding: | 0010 ; 10da ; ffff ; ffff |
| Description: | The contents of register 'f' are incremented. If 'd' is 0, the result is placed in W. If 'd' is 1, the result is placed back in register 'f' (default). If 'a' is 0, the Access Bank will be selected, overriding the BSR value. If 'a' = 1, then the bank will be selected as per the BSR value (default). |
| Words: | 1 |
| Cycles: | 1 |

Q Cycle Activity:

| Q1 | Q2 | Q3 | Q4 |
|---|---|---|---|
| Decode | Read register 'f' | Process Data | Write to destination |

Example: `INCF CNT, 1, 0`

Before Instruction
CNT = 0xFF
Z = 0
C = ?
DC = ?

After Instruction
CNT = 0x00
Z = 1
C = 1
DC = 1


© 2006 Microchip Technology Inc.

## INCFSZ — Increment f, skip if 0

| | |
|---|---|
| Syntax: | [ *label* ] INCFSZ f [,d [,a] |
| Operands: | $0 \le f \le 255$<br>$d \in [0,1]$<br>$a \in [0,1]$ |
| Operation: | (f) + 1 → dest,<br>skip if result = 0 |
| Status Affected: | None |
| Encoding: | 0011 \| 11da \| ffff \| ffff |
| Description: | The contents of register 'f' are incremented. If 'd' is 0, the result is placed in W. If 'd' is 1, the result is placed back in register 'f'. (default) If the result is 0, the next instruction, which is already fetched, is discarded, and a NOP is executed instead, making it a two-cycle instruction. If 'a' is 0, the Access Bank will be selected, overriding the BSR value. If 'a' = 1, then the bank will be selected as per the BSR value (default). |
| Words: | 1 |
| Cycles: | 1(2)<br>**Note:** 3 cycles if skip and followed by a 2-word instruction. |

Q Cycle Activity:

| Q1 | Q2 | Q3 | Q4 |
|---|---|---|---|
| Decode | Read register 'f' | Process Data | Write to destination |

If skip:

| Q1 | Q2 | Q3 | Q4 |
|---|---|---|---|
| No operation | No operation | No operation | No operation |

If skip and followed by 2-word instruction:

| Q1 | Q2 | Q3 | Q4 |
|---|---|---|---|
| No operation | No operation | No operation | No operation |
| No operation | No operation | No operation | No operation |

Example:

```
HERE    INCFSZ   CNT, 1, 0
NZERO   :
ZERO    :
```

Before Instruction
PC = Address (HERE)

After Instruction
CNT = CNT + 1
If CNT = 0;
PC = Address (ZERO)
If CNT ≠ 0;
PC = Address (NZERO)

## INFSNZ — Increment f, skip if not 0

| | |
|---|---|
| Syntax: | [ *label* ] INFSNZ f [,d [,a] |
| Operands: | $0 \le f \le 255$<br>$d \in [0,1]$<br>$a \in [0,1]$ |
| Operation: | (f) + 1 → dest,<br>skip if result ≠ 0 |
| Status Affected: | None |
| Encoding: | 0100 \| 10da \| ffff \| ffff |
| Description: | The contents of register 'f' are incremented. If 'd' is 0, the result is placed in W. If 'd' is 1, the result is placed back in register 'f' (default). If the result is not 0, the next instruction, which is already fetched, is discarded, and a NOP is executed instead, making it a two-cycle instruction. If 'a' is 0, the Access Bank will be selected, overriding the BSR value. If 'a' = 1, then the bank will be selected as per the BSR value (default). |
| Words: | 1 |
| Cycles: | 1(2)<br>**Note:** 3 cycles if skip and followed by a 2-word instruction. |

Q Cycle Activity:

| Q1 | Q2 | Q3 | Q4 |
|---|---|---|---|
| Decode | Read register 'f' | Process Data | Write to destination |

If skip:

| Q1 | Q2 | Q3 | Q4 |
|---|---|---|---|
| No operation | No operation | No operation | No operation |

If skip and followed by 2-word instruction:

| Q1 | Q2 | Q3 | Q4 |
|---|---|---|---|
| No operation | No operation | No operation | No operation |
| No operation | No operation | No operation | No operation |

Example:

```
HERE    INFSNZ  REG, 1, 0
ZERO
NZERO
```

Before Instruction
PC = Address (HERE)

After Instruction
REG = REG + 1
If REG ≠ 0;
PC = Address (NZERO)
If REG = 0;
PC = Address (ZERO)

## IORLW — Inclusive OR literal with W

| | |
|---|---|
| Syntax: | [ *label* ] IORLW k |
| Operands: | $0 \le k \le 255$ |
| Operation: | (W) .OR. k → W |
| Status Affected: | N, Z |
| Encoding: | 0000 \| 1001 \| kkkk \| kkkk |
| Description: | The contents of W are OR'ed with the eight-bit literal 'k'. The result is placed in W. |
| Words: | 1 |
| Cycles: | 1 |

Q Cycle Activity:

| Q1 | Q2 | Q3 | Q4 |
|---|---|---|---|
| Decode | Read literal 'k' | Process Data | Write to W |

Example: `IORLW 0x35`

Before Instruction
W = 0x9A

After Instruction
W = 0xBF

## IORWF — Inclusive OR W with f

| | |
|---|---|
| Syntax: | [ *label* ] IORWF f [,d [,a] |
| Operands: | $0 \le f \le 255$<br>$d \in [0,1]$<br>$a \in [0,1]$ |
| Operation: | (W) .OR. (f) → dest |
| Status Affected: | N, Z |
| Encoding: | 0001 \| 00da \| ffff \| ffff |
| Description: | Inclusive OR W with register 'f'. If 'd' is 0, the result is placed in W. If 'd' is 1, the result is placed back in register 'f' (default). If 'a' is 0, the Access Bank will be selected, overriding the BSR value. If 'a' = 1, then the bank will be selected as per the BSR value (default). |
| Words: | 1 |
| Cycles: | 1 |

Q Cycle Activity:

| Q1 | Q2 | Q3 | Q4 |
|---|---|---|---|
| Decode | Read register 'f' | Process Data | Write to destination |

Example: `IORWF RESULT, 0, 1`

Before Instruction
RESULT = 0x13
W = 0x91

After Instruction
RESULT = 0x13
W = 0x93


© 2006 Microchip Technology Inc.

## LFSR — Load FSR

| | |
|---|---|
| Syntax: | [ *label* ] LFSR f,k |
| Operands: | $0 \le f \le 2$<br>$0 \le k \le 4095$ |
| Operation: | k → FSRf |
| Status Affected: | None |
| Encoding: | 1110 1111 \| 1110 0000 \| 00ff $k_7$kkk \| $k_{11}$kkk kkkk |
| Description: | The 12-bit literal 'k' is loaded into the file select register pointed to by 'f'. |
| Words: | 2 |
| Cycles: | 2 |

Q Cycle Activity:

| Q1 | Q2 | Q3 | Q4 |
|---|---|---|---|
| Decode | Read literal 'k' MSB | Process Data | Write literal 'k' MSB to FSRfH |
| Decode | Read literal 'k' LSB | Process Data | Write literal 'k' to FSRfL |

Example: `LFSR 2, 0x3AB`

After Instruction
FSR2H = 0x03
FSR2L = 0xAB

## MOVF — Move f

| | |
|---|---|
| Syntax: | [ *label* ] MOVF f [,d [,a] |
| Operands: | $0 \le f \le 255$<br>$d \in [0,1]$<br>$a \in [0,1]$ |
| Operation: | f → dest |
| Status Affected: | N, Z |
| Encoding: | 0101 \| 00da \| ffff \| ffff |
| Description: | The contents of register 'f' are moved to a destination dependent upon the status of ’d’. If 'd' is 0, the result is placed in W. If 'd' is 1, the result is placed back in register 'f' (default). Location 'f' can be anywhere in the 256 byte bank. If ’a’ is 0, the Access Bank will be selected, overriding the BSR value. If ‘a’ = 1, then the bank will be selected as per the BSR value (default). |
| Words: | 1 |
| Cycles: | 1 |

Q Cycle Activity:

| Q1 | Q2 | Q3 | Q4 |
|---|---|---|---|
| Decode | Read register 'f' | Process Data | Write W |

Example: `MOVF REG, 0, 0`

Before Instruction
REG = 0x22
W = 0xFF

After Instruction
REG = 0x22
W = 0x22

## MOVFF — Move f to f

| | |
|---|---|
| Syntax: | [ *label* ] MOVFF $f_s$,$f_d$ |
| Operands: | $0 \le f_s \le 4095$<br>$0 \le f_d \le 4095$ |
| Operation: | $(f_s) \rightarrow f_d$ |
| Status Affected: | None |

Encoding:

| | | | | |
|---|---|---|---|---|
| 1st word (source) | 1100 | ffff | ffff | $ffff_s$ |
| 2nd word (destin.) | 1111 | ffff | ffff | $ffff_d$ |

Description: The contents of source register '$f_s$' are moved to destination register '$f_d$'. Location of source '$f_s$' can be anywhere in the 4096 byte data space (000h to FFFh), and location of destination '$f_d$' can also be anywhere from 000h to FFFh.
Either source or destination can be W (a useful special situation).
`MOVFF` is particularly useful for transferring a data memory location to a peripheral register (such as the transmit buffer or an I/O port).

The `MOVFF` instruction cannot use the PCL, TOSU, TOSH or TOSL as the destination register.

**Note:** The `MOVFF` instruction should not be used to modify interrupt settings while any interrupt is enabled. See Section 8.0 for more information.

Words: 2

Cycles: 2 (3)

Q Cycle Activity:

| Q1 | Q2 | Q3 | Q4 |
|---|---|---|---|
| Decode | Read register 'f' (src) | Process Data | No operation |
| Decode | No operation<br>No dummy read | No operation | Write register 'f' (dest) |

Example: `MOVFF REG1, REG2`

Before Instruction
REG1 = 0x33
REG2 = 0x11

After Instruction
REG1 = 0x33,
REG2 = 0x33

## MOVLB — Move literal to low nibble in BSR

| | |
|---|---|
| Syntax: | [ *label* ] MOVLB k |
| Operands: | $0 \le k \le 255$ |
| Operation: | $k \rightarrow BSR$ |
| Status Affected: | None |

Encoding:

| | | | |
|---|---|---|---|
| 0000 | 0001 | kkkk | kkkk |

Description: The 8-bit literal 'k' is loaded into the Bank Select Register (BSR).

Words: 1

Cycles: 1

Q Cycle Activity:

| Q1 | Q2 | Q3 | Q4 |
|---|---|---|---|
| Decode | Read literal 'k' | Process Data | Write literal 'k' to BSR |

Example: `MOVLB 5`

Before Instruction
BSR register = 0x02

After Instruction
BSR register = 0x05


© 2006 Microchip Technology Inc.

## MOVLW — Move literal to W

| | |
|---|---|
| Syntax: | [ *label* ] MOVLW k |
| Operands: | $0 \le k \le 255$ |
| Operation: | $k \rightarrow W$ |
| Status Affected: | None |
| Encoding: | 0000 \| 1110 \| kkkk \| kkkk |
| Description: | The eight-bit literal 'k' is loaded into W. |
| Words: | 1 |
| Cycles: | 1 |

Q Cycle Activity:

| Q1 | Q2 | Q3 | Q4 |
|---|---|---|---|
| Decode | Read literal 'k' | Process Data | Write to W |

Example: `MOVLW 0x5A`

After Instruction

W = 0x5A

## MOVWF — Move W to f

| | |
|---|---|
| Syntax: | [ *label* ] MOVWF f [,a] |
| Operands: | $0 \le f \le 255$<br>$a \in [0,1]$ |
| Operation: | $(W) \rightarrow f$ |
| Status Affected: | None |
| Encoding: | 0110 \| 111a \| ffff \| ffff |
| Description: | Move data from W to register 'f'. Location 'f' can be anywhere in the 256 byte bank. If ‘a’ is 0, the Access Bank will be selected, overriding the BSR value. If ‘a’ = 1, then the bank will be selected as per the BSR value (default). |
| Words: | 1 |
| Cycles: | 1 |

Q Cycle Activity:

| Q1 | Q2 | Q3 | Q4 |
|---|---|---|---|
| Decode | Read register 'f' | Process Data | Write register 'f' |

Example: `MOVWF REG, 0`

Before Instruction

W = 0x4F
REG = 0xFF

After Instruction

W = 0x4F
REG = 0x4F

## MULLW — Multiply Literal with W

| | |
|---|---|
| Syntax: | [ *label* ] MULLW k |
| Operands: | $0 \le k \le 255$ |
| Operation: | (W) x k → PRODH:PRODL |
| Status Affected: | None |
| Encoding: | 0000 \| 1101 \| kkkk \| kkkk |
| Description: | An unsigned multiplication is carried out between the contents of W and the 8-bit literal 'k'. The 16-bit result is placed in PRODH:PRODL register pair. PRODH contains the high byte. W is unchanged. None of the status flags are affected. Note that neither overflow nor carry is possible in this operation. A zero result is possible but not detected. |
| Words: | 1 |
| Cycles: | 1 |

Q Cycle Activity:

| Q1 | Q2 | Q3 | Q4 |
|---|---|---|---|
| Decode | Read literal 'k' | Process Data | Write registers PRODH: PRODL |

Example: `MULLW 0xC4`

Before Instruction

W = 0xE2
PRODH = ?
PRODL = ?

After Instruction

W = 0xE2
PRODH = 0xAD
PRODL = 0x08

## MULWF — Multiply W with f

| | |
|---|---|
| Syntax: | [ *label* ] MULWF f [,a] |
| Operands: | $0 \le f \le 255$<br>$a \in [0,1]$ |
| Operation: | (W) x (f) → PRODH:PRODL |
| Status Affected: | None |
| Encoding: | 0000 \| 001a \| ffff \| ffff |
| Description: | An unsigned multiplication is carried out between the contents of W and the register file location 'f'. The 16-bit result is stored in the PRODH:PRODL register pair. PRODH contains the high byte. Both W and 'f' are unchanged. None of the status flags are affected. Note that neither overflow nor carry is possible in this operation. A zero result is possible but not detected. If ‘a’ is 0, the Access Bank will be selected, overriding the BSR value. If ‘a’ = 1, then the bank will be selected as per the BSR value (default). |
| Words: | 1 |
| Cycles: | 1 |

Q Cycle Activity:

| Q1 | Q2 | Q3 | Q4 |
|---|---|---|---|
| Decode | Read register 'f' | Process Data | Write registers PRODH: PRODL |

Example: `MULWF REG, 1`

Before Instruction

W = 0xC4
REG = 0xB5
PRODH = ?
PRODL = ?

After Instruction

W = 0xC4
REG = 0xB5
PRODH = 0x8A
PRODL = 0x94


© 2006 Microchip Technology Inc.

## NEGF — Negate f

| | |
|---|---|
| Syntax: | [ *label* ] NEGF f [,a] |
| Operands: | $0 \le f \le 255$<br>$a \in [0,1]$ |
| Operation: | $(\overline{f}) + 1 \rightarrow f$ |
| Status Affected: | N, OV, C, DC, Z |
| Encoding: | 0110 110a ffff ffff |
| Description: | Location 'f' is negated using two's complement. The result is placed in the data memory location 'f'. If 'a' is 0, the Access Bank will be selected, overriding the BSR value. If 'a' = 1, then the bank will be selected as per the BSR value. |
| Words: | 1 |
| Cycles: | 1 |

Q Cycle Activity:

| Q1 | Q2 | Q3 | Q4 |
|---|---|---|---|
| Decode | Read register 'f' | Process Data | Write register 'f' |

Example: `NEGF REG, 1`

Before Instruction
REG = 0011 1010 [0x3A]
After Instruction
REG = 1100 0110 [0xC6]

## NOP — No Operation

| | |
|---|---|
| Syntax: | [ *label* ] NOP |
| Operands: | None |
| Operation: | No operation |
| Status Affected: | None |
| Encoding: | 0000 1111 0000 xxxx 0000 xxxx 0000 xxxx |
| Description: | No operation. |
| Words: | 1 |
| Cycles: | 1 |

Q Cycle Activity:

| Q1 | Q2 | Q3 | Q4 |
|---|---|---|---|
| Decode | No operation | No operation | No operation |

Example:

None.

| POP | Pop Top of Return Stack |
|---|---|
| Syntax: | [ *label* ] POP |
| Operands: | None |
| Operation: | (TOS) → bit bucket |
| Status Affected: | None |
| Encoding: | 0000 0000 0000 0110 |
| Description: | The TOS value is pulled off the return stack and is discarded. The TOS value then becomes the previous value that was pushed onto the return stack.<br>This instruction is provided to enable the user to properly manage the return stack to incorporate a software stack. |
| Words: | 1 |
| Cycles: | 1 |

Q Cycle Activity:

| Q1 | Q2 | Q3 | Q4 |
|---|---|---|---|
| Decode | No operation | POP TOS value | No operation |

Example:

```
POP
GOTO      NEW
```

Before Instruction

TOS = 0031A2h
Stack (1 level down) = 014332h

After Instruction

TOS = 014332h
PC = NEW

| PUSH | Push Top of Return Stack |
|---|---|
| Syntax: | [ *label* ] PUSH |
| Operands: | None |
| Operation: | (PC+2) → TOS |
| Status Affected: | None |
| Encoding: | 0000 0000 0000 0101 |
| Description: | The PC+2 is pushed onto the top of the return stack. The previous TOS value is pushed down on the stack. This instruction allows to implement a software stack by modifying TOS, and then push it onto the return stack. |
| Words: | 1 |
| Cycles: | 1 |

Q Cycle Activity:

| Q1 | Q2 | Q3 | Q4 |
|---|---|---|---|
| Decode | PUSH PC+2 onto return stack | No operation | No operation |

Example:

```
PUSH
```

Before Instruction

TOS = 00345Ah
PC = 000124h

After Instruction

PC = 000126h
TOS = 000126h
Stack (1 level down) = 00345Ah


© 2006 Microchip Technology Inc.

| RCALL | Relative Call |
|---|---|
| Syntax: | [ *label* ] RCALL n |
| Operands: | $-1024 \le n \le 1023$ |
| Operation: | (PC) + 2 → TOS,<br>(PC) + 2 + 2n → PC |
| Status Affected: | None |
| Encoding: | 1101 \| 1nnn \| nnnn \| nnnn |
| Description: | Subroutine call with a jump up to 1K from the current location. First, return address (PC+2) is pushed onto the stack. Then, add the 2's complement number '2n' to the PC. Since the PC will have incremented to fetch the next instruction, the new address will be PC+2+2n. This instruction is a two-cycle instruction. |
| Words: | 1 |
| Cycles: | 2 |

Q Cycle Activity:

| Q1 | Q2 | Q3 | Q4 |
|---|---|---|---|
| Decode | Read literal 'n'<br>Push PC to stack | Process Data | Write to PC |
| No operation | No operation | No operation | No operation |

Example: `HERE RCALL Jump`

Before Instruction
PC = Address (HERE)

After Instruction
PC = Address (Jump)
TOS = Address (HERE+2)

| RESET | Reset |
|---|---|
| Syntax: | [ *label* ] RESET |
| Operands: | None |
| Operation: | Reset all registers and flags that are affected by a $\overline{\text{MCLR}}$ Reset. |
| Status Affected: | All |
| Encoding: | 0000 \| 0000 \| 1111 \| 1111 |
| Description: | This instruction provides a way to execute a $\overline{\text{MCLR}}$ Reset in software. |
| Words: | 1 |
| Cycles: | 1 |

Q Cycle Activity:

| Q1 | Q2 | Q3 | Q4 |
|---|---|---|---|
| Decode | Start reset | No operation | No operation |

Example: `RESET`

After Instruction
Registers = Reset Value
Flags* = Reset Value

## RETFIE — Return from Interrupt

| | |
|---|---|
| Syntax: | [ *label* ] RETFIE [s] |
| Operands: | s ∈ [0,1] |
| Operation: | (TOS) → PC,<br>1 → GIE/GIEH or PEIE/GIEL,<br>if s = 1<br>(WS) → W,<br>(STATUSS) → STATUS,<br>(BSRS) → BSR,<br>PCLATU, PCLATH are unchanged. |
| Status Affected: | GIE/GIEH, PEIE/GIEL. |
| Encoding: | 0000 \| 0000 \| 0001 \| 000s |
| Description: | Return from Interrupt. Stack is popped and Top-of-Stack (TOS) is loaded into the PC. Interrupts are enabled by setting either the high or low priority global interrupt enable bit. If 's' = 1, the contents of the shadow registers WS, STATUSS and BSRS are loaded into their corresponding registers, W, STATUS and BSR. If 's' = 0, no update of these registers occurs (default). |
| Words: | 1 |
| Cycles: | 2 |

Q Cycle Activity:

| Q1 | Q2 | Q3 | Q4 |
|---|---|---|---|
| Decode | No operation | No operation | pop PC from stack<br>Set GIEH or GIEL |
| No operation | No operation | No operation | No operation |

Example: `RETFIE 1`

After Interrupt

| | | |
|---|---|---|
| PC | = | TOS |
| W | = | WS |
| BSR | = | BSRS |
| STATUS | = | STATUSS |
| GIE/GIEH, PEIE/GIEL | = | 1 |

## RETLW — Return Literal to W

| | |
|---|---|
| Syntax: | [ *label* ] RETLW k |
| Operands: | 0 ≤ k ≤ 255 |
| Operation: | k → W,<br>(TOS) → PC,<br>PCLATU, PCLATH are unchanged |
| Status Affected: | None |
| Encoding: | 0000 \| 1100 \| kkkk \| kkkk |
| Description: | W is loaded with the eight-bit literal 'k'. The program counter is loaded from the top of the stack (the return address). The high address latch (PCLATH) remains unchanged. |
| Words: | 1 |
| Cycles: | 2 |

Q Cycle Activity:

| Q1 | Q2 | Q3 | Q4 |
|---|---|---|---|
| Decode | Read literal 'k' | Process Data | pop PC from stack, Write to W |
| No operation | No operation | No operation | No operation |

Example:

```
    CALL TABLE  ; W contains table
                ; offset value
                ; W now has
                ; table value
    :
TABLE
    ADDWF PCL   ; W = offset
    RETLW k0    ; Begin table
    RETLW k1    ;
    :
    :
    RETLW kn    ; End of table
```

Before Instruction

W = 0x07

After Instruction

W = value of kn


© 2006 Microchip Technology Inc.

## RETURN — Return from Subroutine

| | |
|---|---|
| Syntax: | [ *label* ] RETURN [s] |
| Operands: | s ∈ [0,1] |
| Operation: | (TOS) → PC,<br>if s = 1<br>(WS) → W,<br>(STATUSS) → STATUS,<br>(BSRS) → BSR,<br>PCLATU, PCLATH are unchanged |
| Status Affected: | None |
| Encoding: | 0000 \| 0000 \| 0001 \| 001s |
| Description: | Return from subroutine. The stack is popped and the top of the stack (TOS) is loaded into the program counter. If ‘s’= 1, the contents of the shadow registers WS, STATUSS and BSRS are loaded into their corresponding registers, W, STATUS and BSR. If ‘s’ = 0, no update of these registers occurs (default). |
| Words: | 1 |
| Cycles: | 2 |

Q Cycle Activity:

| Q1 | Q2 | Q3 | Q4 |
|---|---|---|---|
| Decode | No operation | Process Data | pop PC from stack |
| No operation | No operation | No operation | No operation |

Example: `RETURN`

After Interrupt
PC = TOS

## RLCF — Rotate Left f through Carry

| | |
|---|---|
| Syntax: | [ *label* ] RLCF f [,d [,a] |
| Operands: | 0 ≤ f ≤ 255<br>d ∈ [0,1]<br>a ∈ [0,1] |
| Operation: | (f<n>) → dest<n+1>,<br>(f<7>) → C,<br>(C) → dest<0> |
| Status Affected: | C, N, Z |
| Encoding: | 0011 \| 01da \| ffff \| ffff |
| Description: | The contents of register 'f' are rotated one bit to the left through the Carry Flag. If 'd' is 0, the result is placed in W. If 'd' is 1, the result is stored back in register 'f' (default). If ‘a’ is 0, the Access Bank will be selected, overriding the BSR value. If ’a’ = 1, then the bank will be selected as per the BSR value (default). |

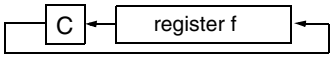


| | |
|---|---|
| Words: | 1 |
| Cycles: | 1 |

Q Cycle Activity:

| Q1 | Q2 | Q3 | Q4 |
|---|---|---|---|
| Decode | Read register 'f' | Process Data | Write to destination |

Example: `RLCF REG, 0, 0`

Before Instruction
REG = 1110 0110
C = 0

After Instruction
REG = 1110 0110
W = 1100 1100
C = 1

## RLNCF — Rotate Left f (no carry)

| | |
|---|---|
| Syntax: | [ *label* ] RLNCF f [,d [,a] |
| Operands: | $0 \le f \le 255$<br>$d \in [0,1]$<br>$a \in [0,1]$ |
| Operation: | (f<n>) → dest<n+1>,<br>(f<7>) → dest<0> |
| Status Affected: | N, Z |
| Encoding: | 0100 \| 01da \| ffff \| ffff |
| Description: | The contents of register 'f' are rotated one bit to the left. If 'd' is 0, the result is placed in W. If 'd' is 1, the result is stored back in register 'f' (default). If 'a' is 0, the Access Bank will be selected, overriding the BSR value. If 'a' is 1, then the bank will be selected as per the BSR value (default). |

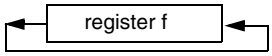


| | |
|---|---|
| Words: | 1 |
| Cycles: | 1 |

Q Cycle Activity:

| Q1 | Q2 | Q3 | Q4 |
|---|---|---|---|
| Decode | Read register 'f' | Process Data | Write to destination |

Example: `RLNCF REG, 1, 0`

Before Instruction
REG = 1010 1011
After Instruction
REG = 0101 0111

## RRCF — Rotate Right f through Carry

| | |
|---|---|
| Syntax: | [ *label* ] RRCF f [,d [,a] |
| Operands: | $0 \le f \le 255$<br>$d \in [0,1]$<br>$a \in [0,1]$ |
| Operation: | (f<n>) → dest<n-1>,<br>(f<0>) → C,<br>(C) → dest<7> |
| Status Affected: | C, N, Z |
| Encoding: | 0011 \| 00da \| ffff \| ffff |
| Description: | The contents of register 'f' are rotated one bit to the right through the Carry Flag. If 'd' is 0, the result is placed in W. If 'd' is 1, the result is placed back in register 'f' (default). If 'a' is 0, the Access Bank will be selected, overriding the BSR value. If 'a' is 1, then the bank will be selected as per the BSR value (default). |

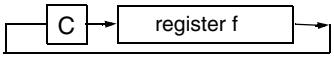


| | |
|---|---|
| Words: | 1 |
| Cycles: | 1 |

Q Cycle Activity:

| Q1 | Q2 | Q3 | Q4 |
|---|---|---|---|
| Decode | Read register 'f' | Process Data | Write to destination |

Example: `RRCF REG, 0, 0`

Before Instruction
REG = 1110 0110
C = 0
After Instruction
REG = 1110 0110
W = 0111 0011
C = 0


© 2006 Microchip Technology Inc.

## RRNCF — Rotate Right f (no carry)

| | |
|---|---|
| Syntax: | [ *label* ] RRNCF f [,d [,a] |
| Operands: | $0 \le f \le 255$<br>$d \in [0,1]$<br>$a \in [0,1]$ |
| Operation: | (f<n>) → dest<n-1>,<br>(f<0>) → dest<7> |
| Status Affected: | N, Z |
| Encoding: | 0100 \| 00da \| ffff \| ffff |
| Description: | The contents of register 'f' are rotated one bit to the right. If 'd' is 0, the result is placed in W. If 'd' is 1, the result is placed back in register 'f' (default). If 'a' is 0, the Access Bank will be selected, overriding the BSR value. If 'a' is 1, then the bank will be selected as per the BSR value (default). |

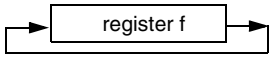


| | |
|---|---|
| Words: | 1 |
| Cycles: | 1 |

Q Cycle Activity:

| Q1 | Q2 | Q3 | Q4 |
|---|---|---|---|
| Decode | Read register 'f' | Process Data | Write to destination |

Example 1: `RRNCF REG, 1, 0`

Before Instruction
REG = 1101 0111
After Instruction
REG = 1110 1011

Example 2: `RRNCF REG, 0, 0`

Before Instruction
W = ?
REG = 1101 0111
After Instruction
W = 1110 1011
REG = 1101 0111

## SETF — Set f

| | |
|---|---|
| Syntax: | [ *label* ] SETF f [,a] |
| Operands: | $0 \le f \le 255$<br>$a \in [0,1]$ |
| Operation: | FFh → f |
| Status Affected: | None |
| Encoding: | 0110 \| 100a \| ffff \| ffff |
| Description: | The contents of the specified register are set to FFh. If 'a' is 0, the Access Bank will be selected, overriding the BSR value. If 'a' is 1, then the bank will be selected as per the BSR value (default). |
| Words: | 1 |
| Cycles: | 1 |

Q Cycle Activity:

| Q1 | Q2 | Q3 | Q4 |
|---|---|---|---|
| Decode | Read register 'f' | Process Data | Write register 'f' |

Example: `SETF REG,1`

Before Instruction
REG = 0x5A
After Instruction
REG = 0xFF

## SLEEP — Enter SLEEP mode

| | |
|---|---|
| Syntax: | [ *label* ] SLEEP |
| Operands: | None |
| Operation: | 00h → WDT,<br>0 → WDT postscaler,<br>1 → $\overline{TO}$,<br>0 → $\overline{PD}$ |
| Status Affected: | $\overline{TO}$, $\overline{PD}$ |
| Encoding: | 0000 \| 0000 \| 0000 \| 0011 |
| Description: | The power-down status bit ($\overline{PD}$) is cleared. The time-out status bit ($\overline{TO}$) is set. Watchdog Timer and its postscaler are cleared.<br>The processor is put into SLEEP mode with the oscillator stopped. |
| Words: | 1 |
| Cycles: | 1 |

Q Cycle Activity:

| Q1 | Q2 | Q3 | Q4 |
|---|---|---|---|
| Decode | No operation | Process Data | Go to sleep |

Example: `SLEEP`

Before Instruction
$\overline{TO}$ = ?
PD = ?

After Instruction
$\overline{TO}$ = 1 †
PD = 0

† If WDT causes wake-up, this bit is cleared.

## SUBFWB — Subtract f from W with borrow

| | |
|---|---|
| Syntax: | [ *label* ] SUBFWB f [,d [,a] |
| Operands: | $0 \le f \le 255$<br>$d \in [0,1]$<br>$a \in [0,1]$ |
| Operation: | (W) – (f) – ($\overline{C}$) → dest |
| Status Affected: | N, OV, C, DC, Z |
| Encoding: | 0101 \| 01da \| ffff \| ffff |
| Description: | Subtract register 'f' and carry flag (borrow) from W (2's complement method). If 'd' is 0, the result is stored in W. If 'd' is 1, the result is stored in register 'f' (default). If 'a' is 0, the Access Bank will be selected, overriding the BSR value. If 'a' is 1, then the bank will be selected as per the BSR value (default). |
| Words: | 1 |
| Cycles: | 1 |

Q Cycle Activity:

| Q1 | Q2 | Q3 | Q4 |
|---|---|---|---|
| Decode | Read register 'f' | Process Data | Write to destination |

Example 1: `SUBFWB REG, 1, 0`

Before Instruction
REG = 3
W = 2
C = 1

After Instruction
REG = FF
W = 2
C = 0
Z = 0
N = 1 ; result is negative

Example 2: `SUBFWB REG, 0, 0`

Before Instruction
REG = 2
W = 5
C = 1

After Instruction
REG = 2
W = 3
C = 1
Z = 0
N = 0 ; result is positive

Example 3: `SUBFWB REG, 1, 0`

Before Instruction
REG = 1
W = 2
C = 0

After Instruction
REG = 0
W = 2
C = 1
Z = 1 ; result is zero
N = 0


© 2006 Microchip Technology Inc.

## SUBLW — Subtract W from literal

| | |
|---|---|
| Syntax: | [ *label* ] SUBLW k |
| Operands: | $0 \le k \le 255$ |
| Operation: | k – (W) → W |
| Status Affected: | N, OV, C, DC, Z |
| Encoding: | 0000 \| 1000 \| kkkk \| kkkk |
| Description: | W is subtracted from the eight-bit literal 'k'. The result is placed in W. |
| Words: | 1 |
| Cycles: | 1 |

Q Cycle Activity:

| Q1 | Q2 | Q3 | Q4 |
|---|---|---|---|
| Decode | Read literal 'k' | Process Data | Write to W |

Example 1: `SUBLW 0x02`

Before Instruction
W = 1
C = ?

After Instruction
W = 1
C = 1 ; result is positive
Z = 0
N = 0

Example 2: `SUBLW 0x02`

Before Instruction
W = 2
C = ?

After Instruction
W = 0
C = 1 ; result is zero
Z = 1
N = 0

Example 3: `SUBLW 0x02`

Before Instruction
W = 3
C = ?

After Instruction
W = FF ; (2's complement)
C = 0 ; result is negative
Z = 0
N = 1

## SUBWF — Subtract W from f

| | |
|---|---|
| Syntax: | [ *label* ] SUBWF f [,d [,a] |
| Operands: | $0 \le f \le 255$<br>$d \in [0,1]$<br>$a \in [0,1]$ |
| Operation: | (f) – (W) → dest |
| Status Affected: | N, OV, C, DC, Z |
| Encoding: | 0101 \| 11da \| ffff \| ffff |
| Description: | Subtract W from register 'f' (2's complement method). If 'd' is 0, the result is stored in W. If 'd' is 1, the result is stored back in register 'f' (default). If 'a' is 0, the Access Bank will be selected, overriding the BSR value. If 'a' is 1, then the bank will be selected as per the BSR value (default). |
| Words: | 1 |
| Cycles: | 1 |

Q Cycle Activity:

| Q1 | Q2 | Q3 | Q4 |
|---|---|---|---|
| Decode | Read register 'f' | Process Data | Write to destination |

Example 1: `SUBWF REG, 1, 0`

Before Instruction
REG = 3
W = 2
C = ?

After Instruction
REG = 1
W = 2
C = 1 ; result is positive
Z = 0
N = 0

Example 2: `SUBWF REG, 0, 0`

Before Instruction
REG = 2
W = 2
C = ?

After Instruction
REG = 2
W = 0
C = 1 ; result is zero
Z = 1
N = 0

Example 3: `SUBWF REG, 1, 0`

Before Instruction
REG = 1
W = 2
C = ?

After Instruction
REG = FFh ;(2's complement)
W = 2
C = 0 ; result is negative
Z = 0
N = 1

## SUBWFB — Subtract W from f with Borrow

| | |
|---|---|
| Syntax: | [ *label* ] SUBWFB f [,d [,a] |
| Operands: | $0 \le f \le 255$<br>$d \in [0,1]$<br>$a \in [0,1]$ |
| Operation: | (f) – (W) – ($\overline{C}$) → dest |
| Status Affected: | N, OV, C, DC, Z |
| Encoding: | 0101 \| 10da \| ffff \| ffff |
| Description: | Subtract W and the carry flag (borrow) from register 'f' (2's complement method). If 'd' is 0, the result is stored in W. If 'd' is 1, the result is stored back in register 'f' (default). If 'a' is 0, the Access Bank will be selected, overriding the BSR value. If 'a' is 1, then the bank will be selected as per the BSR value (default). |
| Words: | 1 |
| Cycles: | 1 |

Q Cycle Activity:

| Q1 | Q2 | Q3 | Q4 |
|---|---|---|---|
| Decode | Read register 'f' | Process Data | Write to destination |

Example 1: `SUBWFB REG, 1, 0`

```
Before Instruction
    REG  =  0x19    (0001 1001)
    W    =  0x0D    (0000 1101)
    C    =  1
After Instruction
    REG  =  0x0C    (0000 1011)
    W    =  0x0D    (0000 1101)
    C    =  1
    Z    =  0
    N    =  0       ; result is positive
```

Example 2: `SUBWFB REG, 0, 0`

```
Before Instruction
    REG  =  0x1B    (0001 1011)
    W    =  0x1A    (0001 1010)
    C    =  0
After Instruction
    REG  =  0x1B    (0001 1011)
    W    =  0x00
    C    =  1
    Z    =  1       ; result is zero
    N    =  0
```

Example 3: `SUBWFB REG, 1, 0`

```
Before Instruction
    REG  =  0x03    (0000 0011)
    W    =  0x0E    (0000 1101)
    C    =  1
After Instruction
    REG  =  0xF5    (1111 0100)
                    ; [2's comp]
    W    =  0x0E    (0000 1101)
    C    =  0
    Z    =  0
    N    =  1       ; result is negative
```

## SWAPF — Swap f

| | |
|---|---|
| Syntax: | [ *label* ] SWAPF f [,d [,a] |
| Operands: | $0 \le f \le 255$<br>$d \in [0,1]$<br>$a \in [0,1]$ |
| Operation: | (f<3:0>) → dest<7:4>,<br>(f<7:4>) → dest<3:0> |
| Status Affected: | None |
| Encoding: | 0011 \| 10da \| ffff \| ffff |
| Description: | The upper and lower nibbles of register 'f' are exchanged. If 'd' is 0, the result is placed in W. If 'd' is 1, the result is placed in register 'f' (default). If 'a' is 0, the Access Bank will be selected, overriding the BSR value. If 'a' is 1, then the bank will be selected as per the BSR value (default). |
| Words: | 1 |
| Cycles: | 1 |

Q Cycle Activity:

| Q1 | Q2 | Q3 | Q4 |
|---|---|---|---|
| Decode | Read register 'f' | Process Data | Write to destination |

Example: `SWAPF REG, 1, 0`

```
Before Instruction
    REG  =  0x53
After Instruction
    REG  =  0x35
```


© 2006 Microchip Technology Inc.

**TBLRD** **Table Read**

Syntax: [ *label* ] TBLRD ( *; *+; *-; +*)

Operands: None

Operation: if TBLRD *,
(Prog Mem (TBLPTR)) → TABLAT;
TBLPTR - No Change;
if TBLRD *+,
(Prog Mem (TBLPTR)) → TABLAT;
(TBLPTR) +1 → TBLPTR;
if TBLRD *-,
(Prog Mem (TBLPTR)) → TABLAT;
(TBLPTR) -1 → TBLPTR;
if TBLRD +*,
(TBLPTR) +1 → TBLPTR;
(Prog Mem (TBLPTR)) → TABLAT;

Status Affected: None

Encoding:

| 0000 | 0000 | 0000 | 10nn<br>nn=0 *<br>=1 *+<br>=2 *-<br>=3 +* |
|---|---|---|---|

Description: This instruction is used to read the contents of Program Memory (P.M.). To address the program memory, a pointer called Table Pointer (TBLPTR) is used. The TBLPTR (a 21-bit pointer) points to each byte in the program memory. TBLPTR has a 2 Mbyte address range.

TBLPTR[0] = 0: Least Significant Byte of Program Memory Word

TBLPTR[0] = 1: Most Significant Byte of Program Memory Word

The `TBLRD` instruction can modify the value of TBLPTR as follows:

- no change
- post-increment
- post-decrement
- pre-increment

Words: 1

Cycles: 2

Q Cycle Activity:

| Q1 | Q2 | Q3 | Q4 |
|---|---|---|---|
| Decode | No operation | No operation | No operation |
| No operation | No operation (Read Program Memory) | No operation | No operation (Write TABLAT) |

**TBLRD** **Table Read (cont'd)**

Example1: `TBLRD *+ ;`

Before Instruction

| | | |
|---|---|---|
| TABLAT | = | 0x55 |
| TBLPTR | = | 0x00A356 |
| MEMORY(0x00A356) | = | 0x34 |

After Instruction

| | | |
|---|---|---|
| TABLAT | = | 0x34 |
| TBLPTR | = | 0x00A357 |

Example2: `TBLRD +* ;`

Before Instruction

| | | |
|---|---|---|
| TABLAT | = | 0xAA |
| TBLPTR | = | 0x01A357 |
| MEMORY(0x01A357) | = | 0x12 |
| MEMORY(0x01A358) | = | 0x34 |

After Instruction

| | | |
|---|---|---|
| TABLAT | = | 0x34 |
| TBLPTR | = | 0x01A358 |

© 2006 Microchip Technology Inc.

**TBLWT** **Table Write**

Syntax: [ *label* ] TBLWT ( *; *+; *-; +*)

Operands: None

Operation: if TBLWT*,
(TABLAT) → Holding Register;
TBLPTR - No Change;
if TBLWT*+,
(TABLAT) → Holding Register;
(TBLPTR) +1 → TBLPTR;
if TBLWT*-,
(TABLAT) → Holding Register;
(TBLPTR) -1 → TBLPTR;
if TBLWT+*,
(TBLPTR) +1 → TBLPTR;
(TABLAT) → Holding Register;

Status Affected: None

Encoding:

| | | | |
|---|---|---|---|
| 0000 | 0000 | 0000 | 11nn<br>nn=0 *<br>=1 *+<br>=2 *-<br>=3 +* |

Description: This instruction uses the 3 LSbs of the TBLPTR to determine which of the 8 holding registers the TABLAT data is written to. The 8 holding registers are used to program the contents of Program Memory (P.M.). See Section 5.0 for information on writing to FLASH memory.
The TBLPTR (a 21-bit pointer) points to each byte in the program memory. TBLPTR has a 2 MBtye address range. The LSb of the TBLPTR selects which byte of the program memory location to access.

TBLPTR[0] = 0: Least Significant Byte of Program Memory Word

TBLPTR[0] = 1: Most Significant Byte of Program Memory Word

The `TBLWT` instruction can modify the value of TBLPTR as follows:

- no change
- post-increment
- post-decrement
- pre-increment

Words: 1

Cycles: 2

Q Cycle Activity:

| Q1 | Q2 | Q3 | Q4 |
|---|---|---|---|
| Decode | No operation | No operation | No operation |
| No operation | No operation (Read TABLAT) | No operation | No operation (Write to Holding Register or Memory) |

**TBLWT** **Table Write (Continued)**

Example1: `TBLWT *+;`

Before Instruction

| | | |
|---|---|---|
| TABLAT | = | 0x55 |
| TBLPTR | = | 0x00A356 |
| HOLDING REGISTER (0x00A356) | = | 0xFF |

After Instructions (table write completion)

| | | |
|---|---|---|
| TABLAT | = | 0x55 |
| TBLPTR | = | 0x00A357 |
| HOLDING REGISTER (0x00A356) | = | 0x55 |

Example 2: `TBLWT +*;`

Before Instruction

| | | |
|---|---|---|
| TABLAT | = | 0x34 |
| TBLPTR | = | 0x01389A |
| HOLDING REGISTER (0x01389A) | = | 0xFF |
| HOLDING REGISTER (0x01389B) | = | 0xFF |

After Instruction (table write completion)

| | | |
|---|---|---|
| TABLAT | = | 0x34 |
| TBLPTR | = | 0x01389B |
| HOLDING REGISTER (0x01389A) | = | 0xFF |
| HOLDING REGISTER (0x01389B) | = | 0x34 |


© 2006 Microchip Technology Inc.

## TSTFSZ — Test f, skip if 0

| | |
|---|---|
| Syntax: | [ *label* ] TSTFSZ f [,a] |
| Operands: | $0 \le f \le 255$<br>$a \in [0,1]$ |
| Operation: | skip if f = 0 |
| Status Affected: | None |
| Encoding: | 0110 \| 011a \| ffff \| ffff |
| Description: | If 'f' = 0, the next instruction, fetched during the current instruction execution, is discarded and a NOP is executed, making this a two-cycle instruction. If 'a' is 0, the Access Bank will be selected, overriding the BSR value. If 'a' is 1, then the bank will be selected as per the BSR value (default). |
| Words: | 1 |
| Cycles: | 1(2)<br>**Note:** 3 cycles if skip and followed by a 2-word instruction. |

Q Cycle Activity:

| Q1 | Q2 | Q3 | Q4 |
|---|---|---|---|
| Decode | Read register 'f' | Process Data | No operation |

If skip:

| Q1 | Q2 | Q3 | Q4 |
|---|---|---|---|
| No operation | No operation | No operation | No operation |

If skip and followed by 2-word instruction:

| Q1 | Q2 | Q3 | Q4 |
|---|---|---|---|
| No operation | No operation | No operation | No operation |
| No operation | No operation | No operation | No operation |

Example:

```
HERE    TSTFSZ  CNT, 1
NZERO     :
ZERO    :
```

Before Instruction
PC = Address (HERE)
After Instruction
If CNT = 0x00,
PC = Address (ZERO)
If CNT ≠ 0x00,
PC = Address (NZERO)

## XORLW — Exclusive OR literal with W

| | |
|---|---|
| Syntax: | [ *label* ] XORLW k |
| Operands: | $0 \le k \le 255$ |
| Operation: | (W) .XOR. k → W |
| Status Affected: | N, Z |
| Encoding: | 0000 \| 1010 \| kkkk \| kkkk |
| Description: | The contents of W are XORed with the 8-bit literal 'k'. The result is placed in W. |
| Words: | 1 |
| Cycles: | 1 |

Q Cycle Activity:

| Q1 | Q2 | Q3 | Q4 |
|---|---|---|---|
| Decode | Read literal 'k' | Process Data | Write to W |

Example: `XORLW 0xAF`

Before Instruction
W = 0xB5
After Instruction
W = 0x1A

| **XORWF** | **Exclusive OR W with f** |
|---|---|
| Syntax: | [ *label* ] XORWF f [,d [,a] |
| Operands: | $0 \le f \le 255$<br>$d \in [0,1]$<br>$a \in [0,1]$ |
| Operation: | (W) .XOR. (f) → dest |
| Status Affected: | N, Z |
| Encoding: | 0001 \| 10da \| ffff \| ffff |
| Description: | Exclusive OR the contents of W with register 'f'. If 'd' is 0, the result is stored in W. If 'd' is 1, the result is stored back in the register 'f' (default). If 'a' is 0, the Access Bank will be selected, overriding the BSR value. If 'a' is 1, then the bank will be selected as per the BSR value (default). |
| Words: | 1 |
| Cycles: | 1 |

Q Cycle Activity:

| Q1 | Q2 | Q3 | Q4 |
|---|---|---|---|
| Decode | Read register 'f' | Process Data | Write to destination |

Example: `XORWF REG, 1, 0`

Before Instruction
REG = 0xAF
W = 0xB5

After Instruction
REG = 0x1A
W = 0xB5


© 2006 Microchip Technology Inc.

## 21.0 DEVELOPMENT SUPPORT

The PICmicro® microcontrollers are supported with a full range of hardware and software development tools:

- Integrated Development Environment
  - MPLAB® IDE Software
- Assemblers/Compilers/Linkers
  - MPASM™ Assembler
  - MPLAB C17 and MPLAB C18 C Compilers
  - MPLINK™ Object Linker/ MPLIB™ Object Librarian
- Simulators
  - MPLAB SIM Software Simulator
- Emulators
  - MPLAB ICE 2000 In-Circuit Emulator
  - ICEPIC™ In-Circuit Emulator
- In-Circuit Debugger
  - MPLAB ICD
- Device Programmers
  - PRO MATE® II Universal Device Programmer
  - PICSTART® Plus Entry-Level Development Programmer
- Low Cost Demonstration Boards
  - PICDEM™ 1 Demonstration Board
  - PICDEM 2 Demonstration Board
  - PICDEM 3 Demonstration Board
  - PICDEM 17 Demonstration Board
  - KEELOQ® Demonstration Board

### 21.1 MPLAB Integrated Development Environment Software

The MPLAB IDE software brings an ease of software development previously unseen in the 8-bit microcontroller market. The MPLAB IDE is a Windows® based application that contains:

- An interface to debugging tools
  - simulator
  - programmer (sold separately)
  - emulator (sold separately)
  - in-circuit debugger (sold separately)
- A full-featured editor
- A project manager
- Customizable toolbar and key mapping
- A status bar
- On-line help

The MPLAB IDE allows you to:

- Edit your source files (either assembly or ‘C’)
- One touch assemble (or compile) and download to PICmicro emulator and simulator tools (automatically updates all project information)
- Debug using:
  - source files
  - absolute listing file
  - machine code

The ability to use MPLAB IDE with multiple debugging tools allows users to easily switch from the cost-effective simulator to a full-featured emulator with minimal retraining.

### 21.2 MPASM Assembler

The MPASM assembler is a full-featured universal macro assembler for all PICmicro MCU’s.

The MPASM assembler has a command line interface and a Windows shell. It can be used as a stand-alone application on a Windows 3.x or greater system, or it can be used through MPLAB IDE. The MPASM assembler generates relocatable object files for the MPLINK object linker, Intel® standard HEX files, MAP files to detail memory usage and symbol reference, an absolute LST file that contains source lines and generated machine code, and a COD file for debugging.

The MPASM assembler features include:

- Integration into MPLAB IDE projects.
- User-defined macros to streamline assembly code.
- Conditional assembly for multi-purpose source files.
- Directives that allow complete control over the assembly process.

### 21.3 MPLAB C17 and MPLAB C18 C Compilers

The MPLAB C17 and MPLAB C18 Code Development Systems are complete ANSI ‘C’ compilers for Microchip’s PIC17CXXX and PIC18CXXX family of microcontrollers, respectively. These compilers provide powerful integration capabilities and ease of use not found with other compilers.

For easier source level debugging, the compilers provide symbol information that is compatible with the MPLAB IDE memory display.

© 2006 Microchip Technology Inc.

## 21.4 MPLINK Object Linker/ MPLIB Object Librarian

The MPLINK object linker combines relocatable objects created by the MPASM assembler and the MPLAB C17 and MPLAB C18 C compilers. It can also link relocatable objects from pre-compiled libraries, using directives from a linker script.

The MPLIB object librarian is a librarian for pre-compiled code to be used with the MPLINK object linker. When a routine from a library is called from another source file, only the modules that contain that routine will be linked in with the application. This allows large libraries to be used efficiently in many different applications. The MPLIB object librarian manages the creation and modification of library files.

The MPLINK object linker features include:

- Integration with MPASM assembler and MPLAB C17 and MPLAB C18 C compilers.
- Allows all memory areas to be defined as sections to provide link-time flexibility.

The MPLIB object librarian features include:

- Easier linking because single libraries can be included instead of many smaller files.
- Helps keep code maintainable by grouping related modules together.
- Allows libraries to be created and modules to be added, listed, replaced, deleted or extracted.

## 21.5 MPLAB SIM Software Simulator

The MPLAB SIM software simulator allows code development in a PC-hosted environment by simulating the PICmicro series microcontrollers on an instruction level. On any given instruction, the data areas can be examined or modified and stimuli can be applied from a file, or user-defined key press, to any of the pins. The execution can be performed in single step, execute until break, or trace mode.

The MPLAB SIM simulator fully supports symbolic debugging using the MPLAB C17 and the MPLAB C18 C compilers and the MPASM assembler. The software simulator offers the flexibility to develop and debug code outside of the laboratory environment, making it an excellent multi-project software development tool.

## 21.6 MPLAB ICE High Performance Universal In-Circuit Emulator with MPLAB IDE

The MPLAB ICE universal in-circuit emulator is intended to provide the product development engineer with a complete microcontroller design tool set for PICmicro microcontrollers (MCUs). Software control of the MPLAB ICE in-circuit emulator is provided by the MPLAB Integrated Development Environment (IDE), which allows editing, building, downloading and source debugging from a single environment.

The MPLAB ICE 2000 is a full-featured emulator system with enhanced trace, trigger and data monitoring features. Interchangeable processor modules allow the system to be easily reconfigured for emulation of different processors. The universal architecture of the MPLAB ICE in-circuit emulator allows expansion to support new PICmicro microcontrollers.

The MPLAB ICE in-circuit emulator system has been designed as a real-time emulation system, with advanced features that are generally found on more expensive development tools. The PC platform and Microsoft® Windows environment were chosen to best make these features available to you, the end user.

## 21.7 ICEPIC In-Circuit Emulator

The ICEPIC low cost, in-circuit emulator is a solution for the Microchip Technology PIC16C5X, PIC16C6X, PIC16C7X and PIC16CXXX families of 8-bit One-Time-Programmable (OTP) microcontrollers. The modular system can support different subsets of PIC16C5X or PIC16CXXX products through the use of interchangeable personality modules, or daughter boards. The emulator is capable of emulating without target application circuitry being present.


© 2006 Microchip Technology Inc.

## 21.8 MPLAB ICD In-Circuit Debugger

Microchip's In-Circuit Debugger, MPLAB ICD, is a powerful, low cost, run-time development tool. This tool is based on the FLASH PICmicro MCUs and can be used to develop for this and other PICmicro microcontrollers. The MPLAB ICD utilizes the in-circuit debugging capability built into the FLASH devices. This feature, along with Microchip's In-Circuit Serial Programming™ protocol, offers cost-effective in-circuit FLASH debugging from the graphical user interface of the MPLAB Integrated Development Environment. This enables a designer to develop and debug source code by watching variables, single-stepping and setting break points. Running at full speed enables testing hardware in real-time.

## 21.9 PRO MATE II Universal Device Programmer

The PRO MATE II universal device programmer is a full-featured programmer, capable of operating in stand-alone mode, as well as PC-hosted mode. The PRO MATE II device programmer is CE compliant.

The PRO MATE II device programmer has programmable $V_{DD}$ and $V_{PP}$ supplies, which allow it to verify programmed memory at $V_{DD}$ min and $V_{DD}$ max for maximum reliability. It has an LCD display for instructions and error messages, keys to enter commands and a modular detachable socket assembly to support various package types. In stand-alone mode, the PRO MATE II device programmer can read, verify, or program PICmicro devices. It can also set code protection in this mode.

## 21.10 PICSTART Plus Entry Level Development Programmer

The PICSTART Plus development programmer is an easy-to-use, low cost, prototype programmer. It connects to the PC via a COM (RS-232) port. MPLAB Integrated Development Environment software makes using the programmer simple and efficient.

The PICSTART Plus development programmer supports all PICmicro devices with up to 40 pins. Larger pin count devices, such as the PIC16C92X and PIC17C76X, may be supported with an adapter socket. The PICSTART Plus development programmer is CE compliant.

## 21.11 PICDEM 1 Low Cost PICmicro Demonstration Board

The PICDEM 1 demonstration board is a simple board which demonstrates the capabilities of several of Microchip's microcontrollers. The microcontrollers supported are: PIC16C5X (PIC16C54 to PIC16C58A), PIC16C61, PIC16C62X, PIC16C71, PIC16C8X, PIC17C42, PIC17C43 and PIC17C44. All necessary hardware and software is included to run basic demo programs. The user can program the sample microcontrollers provided with the PICDEM 1 demonstration board on a PRO MATE II device programmer, or a PICSTART Plus development programmer, and easily test firmware. The user can also connect the PICDEM 1 demonstration board to the MPLAB ICE in-circuit emulator and download the firmware to the emulator for testing. A prototype area is available for the user to build some additional hardware and connect it to the microcontroller socket(s). Some of the features include an RS-232 interface, a potentiometer for simulated analog input, push button switches and eight LEDs connected to PORTB.

## 21.12 PICDEM 2 Low Cost PIC16CXX Demonstration Board

The PICDEM 2 demonstration board is a simple demonstration board that supports the PIC16C62, PIC16C64, PIC16C65, PIC16C73 and PIC16C74 microcontrollers. All the necessary hardware and software is included to run the basic demonstration programs. The user can program the sample microcontrollers provided with the PICDEM 2 demonstration board on a PRO MATE II device programmer, or a PICSTART Plus development programmer, and easily test firmware. The MPLAB ICE in-circuit emulator may also be used with the PICDEM 2 demonstration board to test firmware. A prototype area has been provided to the user for adding additional hardware and connecting it to the microcontroller socket(s). Some of the features include a RS-232 interface, push button switches, a potentiometer for simulated analog input, a serial EEPROM to demonstrate usage of the $I^2C$™ bus and separate headers for connection to an LCD module and a keypad.

## 21.13 PICDEM 3 Low Cost PIC16CXXX Demonstration Board

The PICDEM 3 demonstration board is a simple demonstration board that supports the PIC16C923 and PIC16C924 in the PLCC package. It will also support future 44-pin PLCC microcontrollers with an LCD Module. All the necessary hardware and software is included to run the basic demonstration programs. The user can program the sample microcontrollers provided with the PICDEM 3 demonstration board on a PRO MATE II device programmer, or a PICSTART Plus development programmer with an adapter socket, and easily test firmware. The MPLAB ICE in-circuit emulator may also be used with the PICDEM 3 demonstration board to test firmware. A prototype area has been provided to the user for adding hardware and connecting it to the microcontroller socket(s). Some of the features include a RS-232 interface, push button switches, a potentiometer for simulated analog input, a thermistor and separate headers for connection to an external LCD module and a keypad. Also provided on the PICDEM 3 demonstration board is a LCD panel, with 4 commons and 12 segments, that is capable of displaying time, temperature and day of the week. The PICDEM 3 demonstration board provides an additional RS-232 interface and Windows software for showing the demultiplexed LCD signals on a PC. A simple serial interface allows the user to construct a hardware demultiplexer for the LCD signals.

## 21.14 PICDEM 17 Demonstration Board

The PICDEM 17 demonstration board is an evaluation board that demonstrates the capabilities of several Microchip microcontrollers, including PIC17C752, PIC17C756A, PIC17C762 and PIC17C766. All necessary hardware is included to run basic demo programs, which are supplied on a 3.5-inch disk. A programmed sample is included and the user may erase it and program it with the other sample programs using the PRO MATE II device programmer, or the PICSTART Plus development programmer, and easily debug and test the sample code. In addition, the PICDEM 17 demonstration board supports downloading of programs to and executing out of external FLASH memory on board. The PICDEM 17 demonstration board is also usable with the MPLAB ICE in-circuit emulator, or the PICMASTER emulator and all of the sample programs can be run and modified using either emulator. Additionally, a generous prototype area is available for user hardware.

## 21.15 KEELOQ Evaluation and Programming Tools

KEELOQ evaluation and programming tools support Microchip's HCS Secure Data Products. The HCS evaluation kit includes a LCD display to show changing codes, a decoder to decode transmissions and a programming interface to program test transmitters.


© 2006 Microchip Technology Inc.

**TABLE 21-1: DEVELOPMENT TOOLS FROM MICROCHIP**

| | | PIC12CXXX | PIC14000 | PIC16C5X | PIC16C6X | PIC16CXXX | PIC16F62X | PIC16C7X | PIC16C7XX | PIC16C8X/ PIC16F8X | PIC16F8XX | PIC16C9XX | PIC17C4X | PIC17C7XX | PIC18CXX2 | PIC18FXXX | 24CXX/ 25CXX/ 93CXX | HCSXXX | MCRFXXX | MCP2510 |
|---|---|---|---|---|---|---|---|---|---|---|---|---|---|---|---|---|---|---|---|---|
| Software Tools | MPLAB® Integrated Development Environment | ✓ | ✓ | ✓ | ✓ | ✓ | ✓ | ✓ | ✓ | ✓ | ✓ | ✓ | ✓ | ✓ | ✓ | ✓ | | | | |
| | MPLAB® C17 C Compiler | | | | | | | | | | | | ✓ | ✓ | | | | | | |
| | MPLAB® C18 C Compiler | | | | | | | | | | | | | | ✓ | ✓ | | | | |
| | MPASM™ Assembler/ MPLINK™ Object Linker | ✓ | ✓ | ✓ | ✓ | ✓ | ✓ | ✓ | ✓ | ✓ | ✓ | ✓ | ✓ | ✓ | ✓ | ✓ | ✓ | ✓ | | |
| Emulators | MPLAB® ICE In-Circuit Emulator | ✓ | ✓ | ✓ | ✓ | ✓ | ✓** | ✓ | ✓ | ✓ | ✓ | ✓ | ✓ | ✓ | ✓ | ✓ | | | | |
| | ICEPIC™ In-Circuit Emulator | ✓ | | ✓ | ✓ | ✓ | | ✓ | ✓ | ✓ | | ✓ | | | | | | | | |
| Debugger | MPLAB® ICD In-Circuit Debugger | | | | ✓* | | | ✓* | | | ✓ | | | | | ✓ | | | | |
| Programmers | PICSTART® Plus Entry Level Development Programmer | ✓ | ✓ | ✓ | ✓ | ✓ | ✓** | ✓ | ✓ | ✓ | ✓ | ✓ | ✓ | ✓ | ✓ | ✓ | | | | |
| | PRO MATE® II Universal Device Programmer | ✓ | ✓ | ✓ | ✓ | ✓ | ✓** | ✓ | ✓ | ✓ | ✓ | ✓ | ✓ | ✓ | ✓ | ✓ | ✓ | ✓ | | |
| Demo Boards and Eval Kits | PICDEM™ 1 Demonstration Board | | | ✓ | | ✓ | | ✓† | | ✓ | | | ✓ | | | | | | | |
| | PICDEM™ 2 Demonstration Board | | | | ✓† | | | ✓† | | | | | | | ✓ | ✓ | | | | |
| | PICDEM™ 3 Demonstration Board | | | | | | | | | | | ✓ | | | | | | | | |
| | PICDEM™ 14A Demonstration Board | | ✓ | | | | | | | | | | | | | | | | | |
| | PICDEM™ 17 Demonstration Board | | | | | | | | | | | | | ✓ | | | | | | |
| | KEELOQ® Evaluation Kit | | | | | | | | | | | | | | | | | ✓ | | |
| | KEELOQ® Transponder Kit | | | | | | | | | | | | | | | | | ✓ | | |
| | microID™ Programmer's Kit | | | | | | | | | | | | | | | | | | ✓ | |
| | 125 kHz microID™ Developer's Kit | | | | | | | | | | | | | | | | | | ✓ | |
| | 125 kHz Anticollision microID™ Developer's Kit | | | | | | | | | | | | | | | | | | ✓ | |
| | 13.56 MHz Anticollision microID™ Developer's Kit | | | | | | | | | | | | | | | | | | ✓ | |
| | MCP2510 CAN Developer's Kit | | | | | | | | | | | | | | | | | | | ✓ |

* Contact the Microchip Technology Inc. web site at www.microchip.com for information on how to use the MPLAB® ICD In-Circuit Debugger (DV164001) with PIC16C62, 63, 64, 65, 72, 73, 74, 76, 77.
** Contact Microchip Technology Inc. for availability date.
† Development tool is available on select devices.

**NOTES:**


© 2006 Microchip Technology Inc.

## 22.0 ELECTRICAL CHARACTERISTICS

**Absolute Maximum Ratings** (†)

Ambient temperature under bias ..... -55°C to +125°C

Storage temperature ..... -65°C to +150°C

Voltage on any pin with respect to $V_{SS}$ (except $V_{DD}$, $\overline{MCLR}$, and RA4) ..... -0.3V to ($V_{DD}$ + 0.3V)

Voltage on $V_{DD}$ with respect to $V_{SS}$ ..... -0.3V to +7.5V

Voltage on $\overline{MCLR}$ with respect to $V_{SS}$ **(Note 2)** ..... 0V to +13.25V

Voltage on RA4 with respect to Vss ..... 0V to +8.5V

Total power dissipation **(Note 1)** ..... 1.0W

Maximum current out of $V_{SS}$ pin ..... 300 mA

Maximum current into $V_{DD}$ pin ..... 250 mA

Input clamp current, $I_{IK}$ ($V_I$ < 0 or $V_I$ > $V_{DD}$) ..... ±20 mA

Output clamp current, $I_{OK}$ ($V_O$ < 0 or $V_O$ > $V_{DD}$) ..... ±20 mA

Maximum output current sunk by any I/O pin ..... 25 mA

Maximum output current sourced by any I/O pin ..... 25 mA

Maximum current sunk by PORTA, PORTB, and PORTE **(Note 3)** (combined) ..... 200 mA

Maximum current sourced by PORTA, PORTB, and PORTE **(Note 3)** (combined) ..... 200 mA

Maximum current sunk by PORTC and PORTD **(Note 3)** (combined) ..... 200 mA

Maximum current sourced by PORTC and PORTD **(Note 3)** (combined) ..... 200 mA

**Note 1:** Power dissipation is calculated as follows:
$Pdis = V_{DD} \times \{I_{DD} - \sum I_{OH}\} + \sum \{(V_{DD}-V_{OH}) \times I_{OH}\} + \sum(V_{OI} \times I_{OL})$

**2:** Voltage spikes below $V_{SS}$ at the $\overline{MCLR}/V_{PP}$ pin, inducing currents greater than 80 mA, may cause latchup. Thus, a series resistor of 50-100Ω should be used when applying a “low” level to the $\overline{MCLR}/V_{PP}$ pin, rather than pulling this pin directly to $V_{SS}$.

**3:** PORTD and PORTE not available on the PIC18F2X2 devices.

† NOTICE: Stresses above those listed under “Absolute Maximum Ratings” may cause permanent damage to the device. This is a stress rating only and functional operation of the device at those or any other conditions above those indicated in the operation listings of this specification is not implied. Exposure to maximum rating conditions for extended periods may affect device reliability.

**FIGURE 22-1: PIC18FXX2 VOLTAGE-FREQUENCY GRAPH (INDUSTRIAL)**

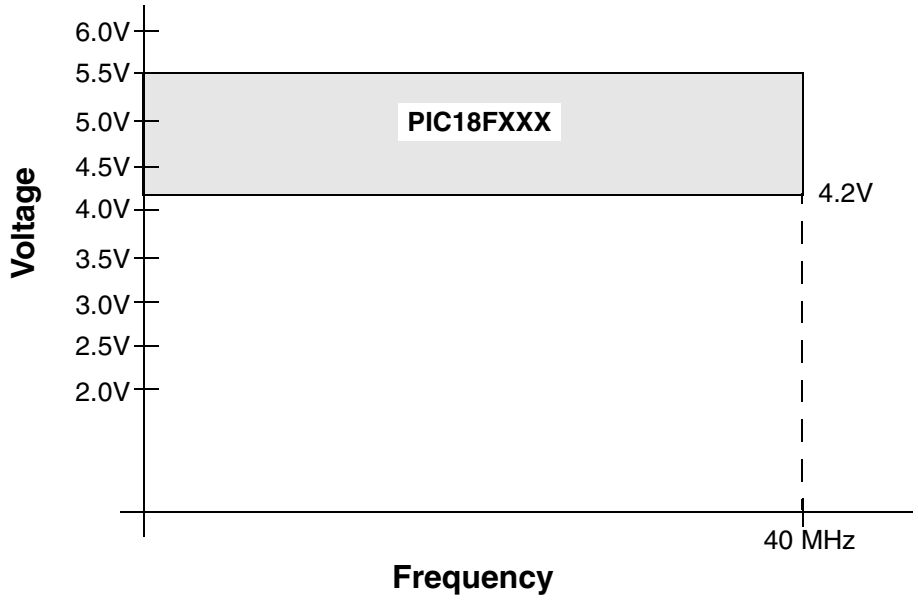


**FIGURE 22-2: PIC18LFXX2 VOLTAGE-FREQUENCY GRAPH (INDUSTRIAL)**

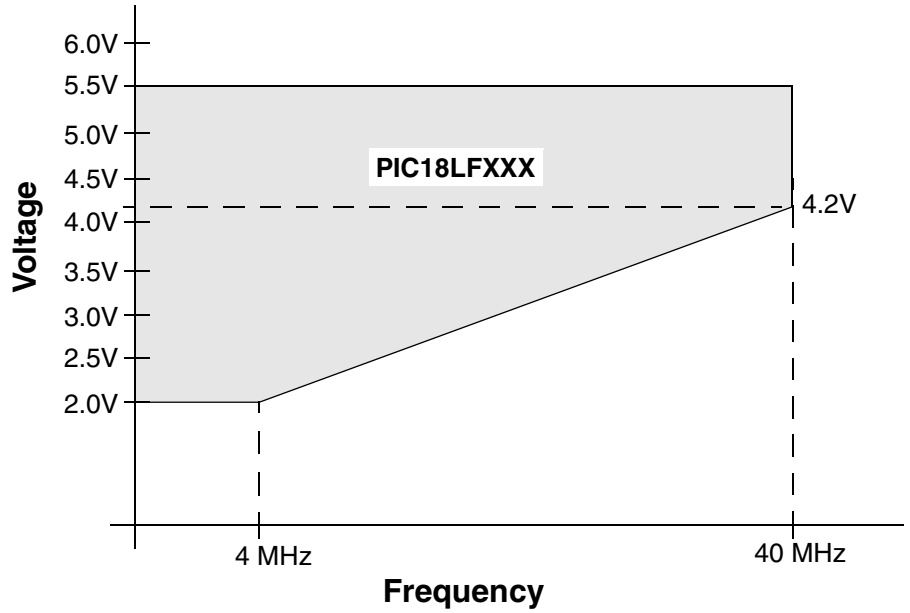


$F_{MAX}$ = (16.36 MHz/V) ($V_{DDAPPMIN}$ – 2.0V) + 4 MHz

**Note:** $V_{DDAPPMIN}$ is the minimum voltage of the PICmicro® device in the application.


© 2006 Microchip Technology Inc.

## 22.1 DC Characteristics: PIC18FXX2 (Industrial, Extended) PIC18LFXX2 (Industrial)

| | |
|---|---|
| **PIC18LFXX2** (Industrial) | **Standard Operating Conditions (unless otherwise stated)**<br>Operating temperature -40°C ≤ TA ≤ +85°C for industrial |
| **PIC18FXX2** (Industrial, Extended) | **Standard Operating Conditions (unless otherwise stated)**<br>Operating temperature -40°C ≤ TA ≤ +85°C for industrial<br>-40°C ≤ TA ≤ +125°C for extended |

| Param No. | Symbol | Characteristic | Min | Typ | Max | Units | Conditions |
|---|---|---|---|---|---|---|---|
| | VDD | **Supply Voltage** | | | | | |
| D001 | | PIC18LFXX2 | 2.0 | — | 5.5 | V | HS, XT, RC and LP Osc mode |
| D001 | | PIC18FXX2 | 4.2 | — | 5.5 | V | |
| D002 | VDR | **RAM Data Retention Voltage(1)** | 1.5 | — | — | V | |
| D003 | VPOR | **VDD Start Voltage** to ensure internal Power-on Reset signal | — | — | 0.7 | V | See Section 3.1 (Power-on Reset) for details |
| D004 | SVDD | **VDD Rise Rate** to ensure internal Power-on Reset signal | 0.05 | — | — | V/ms | See Section 3.1 (Power-on Reset) for details |
| | VBOR | **Brown-out Reset Voltage** | | | | | |
| D005 | | PIC18LFXX2 | | | | | |
| | | BORV1:BORV0 = 11 | 1.98 | — | 2.14 | V | 85°C ≥ T ≥ 25°C |
| | | BORV1:BORV0 = 10 | 2.67 | — | 2.89 | V | |
| | | BORV1:BORV0 = 01 | 4.16 | — | 4.5 | V | |
| | | BORV1:BORV0 = 00 | 4.45 | — | 4.83 | V | |
| D005 | | PIC18FXX2 | | | | | |
| | | BORV1:BORV0 = 1x | N.A. | — | N.A. | V | Not in operating voltage range of device |
| | | BORV1:BORV0 = 01 | 4.16 | — | 4.5 | V | |
| | | BORV1:BORV0 = 00 | 4.45 | — | 4.83 | V | |

Legend: Shading of rows is to assist in readability of the table.

**Note 1:** This is the limit to which VDD can be lowered in SLEEP mode, or during a device RESET, without losing RAM data.

**2:** The supply current is mainly a function of the operating voltage and frequency. Other factors, such as I/O pin loading and switching rate, oscillator type, internal code execution pattern and temperature, also have an impact on the current consumption.
The test conditions for all IDD measurements in active Operation mode are:
OSC1 = external square wave, from rail-to-rail; all I/O pins tri-stated, pulled to VDD
MCLR = VDD; WDT enabled/disabled as specified.

**3:** The power-down current in SLEEP mode does not depend on the oscillator type. Power-down current is measured with the part in SLEEP mode, with all I/O pins in hi-impedance state and tied to VDD or VSS, and all features that add delta current disabled (such as WDT, Timer1 Oscillator, BOR,...).

**4:** For RC osc configuration, current through REXT is not included. The current through the resistor can be estimated by the formula Ir = VDD/2REXT (mA) with REXT in kOhm.

**5:** The LVD and BOR modules share a large portion of circuitry. The ΔIBOR and ΔILVD currents are not additive. Once one of these modules is enabled, the other may also be enabled without further penalty.

## 22.1 DC Characteristics: PIC18FXX2 (Industrial, Extended) PIC18LFXX2 (Industrial) (Continued)

| PIC18LFXX2 (Industrial) | Standard Operating Conditions (unless otherwise stated)<br>Operating temperature -40°C ≤ TA ≤ +85°C for industrial |
|---|---|
| PIC18FXX2 (Industrial, Extended) | Standard Operating Conditions (unless otherwise stated)<br>Operating temperature -40°C ≤ TA ≤ +85°C for industrial<br>-40°C ≤ TA ≤ +125°C for extended |

| Param No. | Symbol | Characteristic | Min | Typ | Max | Units | Conditions |
|---|---|---|---|---|---|---|---|
| | IDD | **Supply Current(2,4)** | | | | | |
| D010 | | PIC18LFXX2 | | | | | XT osc configuration |
| | | | — | .5 | 1 | mA | VDD = 2.0V, +25°C, FOSC = 4 MHz |
| | | | — | .5 | 1.25 | mA | VDD = 2.0V, -40°C to +85°C, FOSC = 4 MHz |
| | | | — | 1.2 | 2 | mA | VDD = 4.2V, -40°C to +85°C, FOSC = 4 MHz |
| | | | | | | | RC osc configuration |
| | | | — | .3 | 1 | mA | VDD = 2.0V, +25°C, FOSC = 4 MHz |
| | | | — | .3 | 1 | mA | VDD = 2.0V, -40°C to +85°C, FOSC = 4 MHz |
| | | | — | 1.5 | 3 | mA | VDD = 4.2V, -40°C to +85°C, FOSC = 4 MHz |
| | | | | | | | RCIO osc configuration |
| | | | — | .3 | 1 | mA | VDD = 2.0V, +25°C, FOSC = 4 MHz |
| | | | — | .3 | 1 | mA | VDD = 2.0V, -40°C to +85°C, FOSC = 4 MHz |
| | | | — | .75 | 3 | mA | VDD = 4.2V, -40°C to +85°C, FOSC = 4 MHz |
| D010 | | PIC18FXX2 | | | | | XT osc configuration |
| | | | — | 1.2 | 1.5 | mA | VDD = 4.2V, +25°C, FOSC = 4 MHz |
| | | | — | 1.2 | 2 | mA | VDD = 4.2V, -40°C to +85°C, FOSC = 4 MHz |
| | | | — | 1.2 | 3 | mA | VDD = 4.2V, -40°C to +125°C, FOSC = 4 MHz |
| | | | | | | | RC osc configuration |
| | | | — | 1.5 | 3 | mA | VDD = 4.2V, +25°C, FOSC = 4 MHz |
| | | | — | 1.5 | 4 | mA | VDD = 4.2V, -40°C to +85°C, FOSC = 4 MHz |
| | | | — | 1.6 | 4 | mA | VDD = 4.2V, -40°C to +125°C, FOSC = 4 MHz |
| | | | | | | | RCIO osc configuration |
| | | | — | .75 | 2 | mA | VDD = 4.2V, +25°C, FOSC = 4 MHz |
| | | | — | .75 | 3 | mA | VDD = 4.2V, -40°C to +85°C, FOSC = 4 MHz |
| | | | — | .8 | 3 | mA | VDD = 4.2V, -40°C to +125°C, FOSC = 4 MHz |
| D010A | | PIC18LFXX2 | | | | | LP osc, FOSC = 32 kHz, WDT disabled |
| | | | — | 14 | 30 | μA | VDD = 2.0V, -40°C to +85°C |
| D010A | | PIC18FXX2 | | | | | LP osc, FOSC = 32 kHz, WDT disabled |
| | | | — | 40 | 70 | μA | VDD = 4.2V, -40°C to +85°C |
| | | | — | 50 | 100 | μA | VDD = 4.2V, -40°C to +125°C |

Legend: Shading of rows is to assist in readability of the table.

**Note 1:** This is the limit to which VDD can be lowered in SLEEP mode, or during a device RESET, without losing RAM data.

**2:** The supply current is mainly a function of the operating voltage and frequency. Other factors, such as I/O pin loading and switching rate, oscillator type, internal code execution pattern and temperature, also have an impact on the current consumption.
The test conditions for all IDD measurements in active Operation mode are:
OSC1 = external square wave, from rail-to-rail; all I/O pins tri-stated, pulled to VDD
$\overline{MCLR}$ = VDD; WDT enabled/disabled as specified.

**3:** The power-down current in SLEEP mode does not depend on the oscillator type. Power-down current is measured with the part in SLEEP mode, with all I/O pins in hi-impedance state and tied to VDD or VSS, and all features that add delta current disabled (such as WDT, Timer1 Oscillator, BOR,...).

**4:** For RC osc configuration, current through REXT is not included. The current through the resistor can be estimated by the formula Ir = VDD/2REXT (mA) with REXT in kOhm.

**5:** The LVD and BOR modules share a large portion of circuitry. The ΔIBOR and ΔILVD currents are not additive. Once one of these modules is enabled, the other may also be enabled without further penalty.


© 2006 Microchip Technology Inc.

## 22.1 DC Characteristics: PIC18FXX2 (Industrial, Extended) PIC18LFXX2 (Industrial) (Continued)

| PIC18LFXX2 (Industrial) | | | Standard Operating Conditions (unless otherwise stated)<br>Operating temperature -40°C ≤ TA ≤ +85°C for industrial | | | | |
|---|---|---|---|---|---|---|---|
| PIC18FXX2 (Industrial, Extended) | | | Standard Operating Conditions (unless otherwise stated)<br>Operating temperature -40°C ≤ TA ≤ +85°C for industrial<br>-40°C ≤ TA ≤ +125°C for extended | | | | |
| **Param No.** | **Symbol** | **Characteristic** | **Min** | **Typ** | **Max** | **Units** | **Conditions** |
| | IDD | **Supply Current(2,4) (Continued)** | | | | | |
| D010C | | PIC18LFXX2 | — | 10 | 25 | mA | EC, ECIO osc configurations<br>VDD = 4.2V, -40°C to +85°C |
| D010C | | PIC18FXX2 | — | 10 | 25 | mA | EC, ECIO osc configurations<br>VDD = 4.2V, -40°C to +125°C |
| D013 | | PIC18LFXX2 | —<br>—<br><br>— | .6<br>10<br><br>15 | 2<br>15<br><br>25 | mA<br>mA<br><br>mA | HS osc configuration<br>FOSC = 4 MHz, VDD = 2.0V<br>FOSC = 25 MHz, VDD = 5.5V<br>HS + PLL osc configurations<br>FOSC = 10 MHz, VDD = 5.5V |
| D013 | | PIC18FXX2 | —<br><br>— | 10<br><br>15 | 15<br><br>25 | mA<br><br>mA | HS osc configuration<br>FOSC = 25 MHz, VDD = 5.5V<br>HS + PLL osc configurations<br>FOSC = 10 MHz, VDD = 5.5V |
| D014 | | PIC18LFXX2 | — | 15 | 55 | µA | Timer1 osc configuration<br>FOSC = 32 kHz, VDD = 2.0V |
| D014 | | PIC18FXX2 | —<br>— | —<br>— | 200<br>250 | µA<br>µA | Timer1 osc configuration<br>FOSC = 32 kHz, VDD = 4.2V, -40°C to +85°C<br>FOSC = 32 kHz, VDD = 4.2V, -40°C to +125°C |
| | IPD | **Power-down Current(3)** | | | | | |
| D020 | | PIC18LFXX2 | —<br>—<br>— | .08<br>.1<br>3 | .9<br>4<br>10 | µA<br>µA<br>µA | VDD = 2.0V, +25°C<br>VDD = 2.0V, -40°C to +85°C<br>VDD = 4.2V, -40°C to +85°C |
| D020<br><br>D021B | | PIC18FXX2 | —<br>—<br>— | .1<br>3<br>15 | .9<br>10<br>25 | µA<br>µA<br>µA | VDD = 4.2V, +25°C<br>VDD = 4.2V, -40°C to +85°C<br>VDD = 4.2V, -40°C to +125°C |

Legend: Shading of rows is to assist in readability of the table.

**Note 1:** This is the limit to which VDD can be lowered in SLEEP mode, or during a device RESET, without losing RAM data.

**2:** The supply current is mainly a function of the operating voltage and frequency. Other factors, such as I/O pin loading and switching rate, oscillator type, internal code execution pattern and temperature, also have an impact on the current consumption.
The test conditions for all IDD measurements in active Operation mode are:
OSC1 = external square wave, from rail-to-rail; all I/O pins tri-stated, pulled to VDD
$\overline{\text{MCLR}}$ = VDD; WDT enabled/disabled as specified.

**3:** The power-down current in SLEEP mode does not depend on the oscillator type. Power-down current is measured with the part in SLEEP mode, with all I/O pins in hi-impedance state and tied to VDD or VSS, and all features that add delta current disabled (such as WDT, Timer1 Oscillator, BOR,...).

**4:** For RC osc configuration, current through REXT is not included. The current through the resistor can be estimated by the formula Ir = VDD/2REXT (mA) with REXT in kOhm.

**5:** The LVD and BOR modules share a large portion of circuitry. The ΔIBOR and ΔILVD currents are not additive. Once one of these modules is enabled, the other may also be enabled without further penalty.

## 22.1 DC Characteristics: PIC18FXX2 (Industrial, Extended) PIC18LFXX2 (Industrial) (Continued)

| PIC18LFXX2 (Industrial) | | | Standard Operating Conditions (unless otherwise stated)<br>Operating temperature -40°C ≤ TA ≤ +85°C for industrial | | | | |
|---|---|---|---|---|---|---|---|
| **PIC18FXX2 (Industrial, Extended)** | | | **Standard Operating Conditions (unless otherwise stated)**<br>Operating temperature -40°C ≤ TA ≤ +85°C for industrial<br>-40°C ≤ TA ≤ +125°C for extended | | | | |
| **Param No.** | **Symbol** | **Characteristic** | **Min** | **Typ** | **Max** | **Units** | **Conditions** |
| | | **Module Differential Current** | | | | | |
| D022 | ΔIWDT | **Watchdog Timer** | — | .75 | 1.5 | μA | VDD = 2.0V, +25°C |
| | | PIC18LFXX2 | — | 2 | 8 | μA | VDD = 2.0V, -40°C to +85°C |
| | | | — | 10 | 25 | μA | VDD = 4.2V, -40°C to +85°C |
| D022 | | **Watchdog Timer** | — | 7 | 15 | μA | VDD = 4.2V, +25°C |
| | | PIC18FXX2 | — | 10 | 25 | μA | VDD = 4.2V, -40°C to +85°C |
| | | | — | 25 | 40 | μA | VDD = 4.2V, -40°C to +125°C |
| D022A | ΔIBOR | **Brown-out Reset(5)** | — | 29 | 35 | μA | VDD = 2.0V, +25°C |
| | | PIC18LFXX2 | — | 29 | 45 | μA | VDD = 2.0V, -40°C to +85°C |
| | | | — | 33 | 50 | μA | VDD = 4.2V, -40°C to +85°C |
| D022A | | **Brown-out Reset(5)** | — | 36 | 40 | μA | VDD = 4.2V, +25°C |
| | | PIC18FXX2 | — | 36 | 50 | μA | VDD = 4.2V, -40°C to +85°C |
| | | | — | 36 | 65 | μA | VDD = 4.2V, -40°C to +125°C |
| D022B | ΔILVD | **Low Voltage Detect(5)** | — | 29 | 35 | μA | VDD = 2.0V, +25°C |
| | | PIC18LFXX2 | — | 29 | 45 | μA | VDD = 2.0V, -40°C to +85°C |
| | | | — | 33 | 50 | μA | VDD = 4.2V, -40°C to +85°C |
| D022B | | **Low Voltage Detect(5)** | — | 33 | 40 | μA | VDD = 4.2V, +25°C |
| | | PIC18FXX2 | — | 33 | 50 | μA | VDD = 4.2V, -40°C to +85°C |
| | | | — | 33 | 65 | μA | VDD = 4.2V, -40°C to +125°C |
| D025 | ΔITMR1 | **Timer1 Oscillator** | — | 5.2 | 30 | μA | VDD = 2.0V, +25°C |
| | | PIC18LFXX2 | — | 5.2 | 40 | μA | VDD = 2.0V, -40°C to +85°C |
| | | | — | 6.5 | 50 | μA | VDD = 4.2V, -40°C to +85°C |
| D025 | | **Timer1 Oscillator** | — | 6.5 | 40 | μA | VDD = 4.2V, +25°C |
| | | PIC18FXX2 | — | 6.5 | 50 | μA | VDD = 4.2V, -40°C to +85°C |
| | | | — | 6.5 | 65 | μA | VDD = 4.2V, -40°C to +125°C |

Legend: Shading of rows is to assist in readability of the table.

**Note 1:** This is the limit to which VDD can be lowered in SLEEP mode, or during a device RESET, without losing RAM data.

**2:** The supply current is mainly a function of the operating voltage and frequency. Other factors, such as I/O pin loading and switching rate, oscillator type, internal code execution pattern and temperature, also have an impact on the current consumption.
The test conditions for all IDD measurements in active Operation mode are:
OSC1 = external square wave, from rail-to-rail; all I/O pins tri-stated, pulled to VDD
$\overline{\text{MCLR}}$ = VDD; WDT enabled/disabled as specified.

**3:** The power-down current in SLEEP mode does not depend on the oscillator type. Power-down current is measured with the part in SLEEP mode, with all I/O pins in hi-impedance state and tied to VDD or VSS, and all features that add delta current disabled (such as WDT, Timer1 Oscillator, BOR,...).

**4:** For RC osc configuration, current through REXT is not included. The current through the resistor can be estimated by the formula Ir = VDD/2REXT (mA) with REXT in kOhm.

**5:** The LVD and BOR modules share a large portion of circuitry. The ΔIBOR and ΔILVD currents are not additive. Once one of these modules is enabled, the other may also be enabled without further penalty.


© 2006 Microchip Technology Inc.

## 22.2 DC Characteristics: PIC18FXX2 (Industrial, Extended) PIC18LFXX2 (Industrial)

| DC CHARACTERISTICS | | | Standard Operating Conditions (unless otherwise stated)<br>Operating temperature -40°C ≤ TA ≤ +85°C for industrial<br>-40°C ≤ TA ≤ +125°C for extended | | | |
|---|---|---|---|---|---|---|
| **Param No.** | **Symbol** | **Characteristic** | **Min** | **Max** | **Units** | **Conditions** |
| | VIL | **Input Low Voltage** | | | | |
| | | I/O ports: | | | | |
| D030 | | with TTL buffer | Vss | 0.15 VDD | V | VDD < 4.5V |
| D030A | | | — | 0.8 | V | 4.5V ≤ VDD ≤ 5.5V |
| D031 | | with Schmitt Trigger buffer | Vss | 0.2 VDD | V | |
| | | RC3 and RC4 | Vss | 0.3 VDD | V | |
| D032 | | $\overline{\text{MCLR}}$ | VSS | 0.2 VDD | V | |
| D032A | | OSC1 (in XT, HS and LP modes) and T1OSI | VSS | 0.3 VDD | V | |
| D033 | | OSC1 (in RC and EC mode)(1) | VSS | 0.2 VDD | V | |
| | VIH | **Input High Voltage** | | | | |
| | | I/O ports: | | | | |
| D040 | | with TTL buffer | 0.25 VDD + 0.8V | VDD | V | VDD < 4.5V |
| D040A | | | 2.0 | VDD | V | 4.5V ≤ VDD ≤ 5.5V |
| D041 | | with Schmitt Trigger buffer | 0.8 VDD | VDD | V | |
| | | RC3 and RC4 | 0.7 VDD | VDD | V | |
| D042 | | $\overline{\text{MCLR}}$, OSC1 (EC mode) | 0.8 VDD | VDD | V | |
| D042A | | OSC1 (in XT, HS and LP modes) and T1OSI | 0.7 VDD | VDD | V | |
| D043 | | OSC1 (RC mode)(1) | 0.9 VDD | VDD | V | |
| | IIL | **Input Leakage Current(2,3)** | | | | |
| D060 | | I/O ports | .02 | ±1 | μA | VSS ≤ VPIN ≤ VDD, Pin at hi-impedance |
| D061 | | $\overline{\text{MCLR}}$ | — | ±1 | μA | Vss ≤ VPIN ≤ VDD |
| D063 | | OSC1 | — | ±1 | μA | Vss ≤ VPIN ≤ VDD |
| | IPU | **Weak Pull-up Current** | | | | |
| D070 | IPURB | PORTB weak pull-up current | 50 | 450 | μA | VDD = 5V, VPIN = VSS |

**Note 1:** In RC oscillator configuration, the OSC1/CLKI pin is a Schmitt Trigger input. It is not recommended that the PICmicro device be driven with an external clock while in RC mode.

**2:** The leakage current on the $\overline{\text{MCLR}}$ pin is strongly dependent on the applied voltage level. The specified levels represent normal operating conditions. Higher leakage current may be measured at different input voltages.

**3:** Negative current is defined as current sourced by the pin.

**4:** Parameter is characterized but not tested.

## 22.2 DC Characteristics: PIC18FXX2 (Industrial, Extended) PIC18LFXX2 (Industrial) (Continued)

| DC CHARACTERISTICS | | | Standard Operating Conditions (unless otherwise stated)<br>Operating temperature -40°C ≤ TA ≤ +85°C for industrial<br>-40°C ≤ TA ≤ +125°C for extended | | | |
|---|---|---|---|---|---|---|
| **Param No.** | **Symbol** | **Characteristic** | **Min** | **Max** | **Units** | **Conditions** |
| | VOL | **Output Low Voltage** | | | | |
| D080 | | I/O ports | — | 0.6 | V | IOL = 8.5 mA, VDD = 4.5V, -40°C to +85°C |
| D080A | | | — | 0.6 | V | IOL = 7.0 mA, VDD = 4.5V, -40°C to +125°C |
| D083 | | OSC2/CLKO (RC mode) | — | 0.6 | V | IOL = 1.6 mA, VDD = 4.5V, -40°C to +85°C |
| D083A | | | — | 0.6 | V | IOL = 1.2 mA, VDD = 4.5V, -40°C to +125°C |
| | VOH | **Output High Voltage**(3) | | | | |
| D090 | | I/O ports | VDD – 0.7 | — | V | IOH = -3.0 mA, VDD = 4.5V, -40°C to +85°C |
| D090A | | | VDD – 0.7 | — | V | IOH = -2.5 mA, VDD = 4.5V, -40°C to +125°C |
| D092 | | OSC2/CLKO (RC mode) | VDD – 0.7 | — | V | IOH = -1.3 mA, VDD = 4.5V, -40°C to +85°C |
| D092A | | | VDD – 0.7 | — | V | IOH = -1.0 mA, VDD = 4.5V, -40°C to +125°C |
| D150 | VOD | **Open Drain High Voltage** | — | 8.5 | V | RA4 pin |
| | | **Capacitive Loading Specs on Output Pins** | | | | |
| D100(4) | COSC2 | OSC2 pin | — | 15 | pF | In XT, HS and LP modes when external clock is used to drive OSC1 |
| D101 | CIO | All I/O pins and OSC2 (in RC mode) | — | 50 | pF | To meet the AC Timing Specifications |
| D102 | CB | SCL, SDA | — | 400 | pF | In $I^2C$ mode |

**Note 1:** In RC oscillator configuration, the OSC1/CLKI pin is a Schmitt Trigger input. It is not recommended that the PICmicro device be driven with an external clock while in RC mode.

**2:** The leakage current on the $\overline{MCLR}$ pin is strongly dependent on the applied voltage level. The specified levels represent normal operating conditions. Higher leakage current may be measured at different input voltages.

**3:** Negative current is defined as current sourced by the pin.

**4:** Parameter is characterized but not tested.


© 2006 Microchip Technology Inc.

**FIGURE 22-3: LOW VOLTAGE DETECT CHARACTERISTICS**

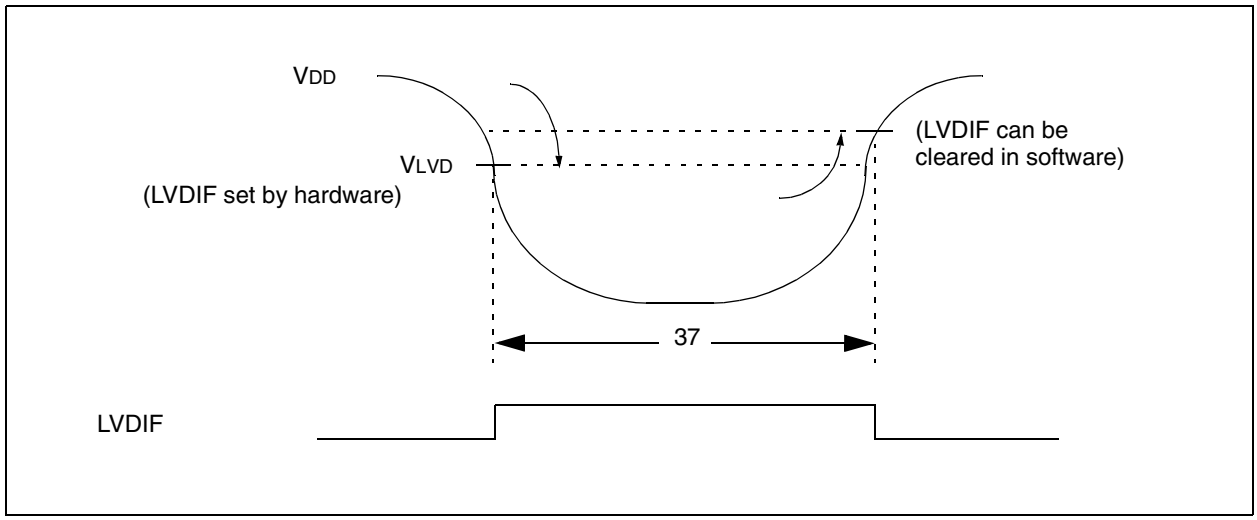


**TABLE 22-1: LOW VOLTAGE DETECT CHARACTERISTICS**

| | | | | Standard Operating Conditions (unless otherwise stated)<br>Operating temperature -40°C ≤ TA ≤ +85°C for industrial<br>-40°C ≤ TA ≤ +125°C for extended | | | | |
|---|---|---|---|---|---|---|---|---|
| **Param No.** | **Symbol** | **Characteristic** | | **Min** | **Typ** | **Max** | **Units** | **Conditions** |
| D420 | VLVD | LVD Voltage on VDD transition high to low | LVV = 0001 | 1.98 | 2.06 | 2.14 | V | T ≥ 25°C |
| | | | LVV = 0010 | 2.18 | 2.27 | 2.36 | V | T ≥ 25°C |
| | | | LVV = 0011 | 2.37 | 2.47 | 2.57 | V | T ≥ 25°C |
| | | | LVV = 0100 | 2.48 | 2.58 | 2.68 | V | |
| | | | LVV = 0101 | 2.67 | 2.78 | 2.89 | V | |
| | | | LVV = 0110 | 2.77 | 2.89 | 3.01 | V | |
| | | | LVV = 0111 | 2.98 | 3.1 | 3.22 | V | |
| | | | LVV = 1000 | 3.27 | 3.41 | 3.55 | V | |
| | | | LVV = 1001 | 3.47 | 3.61 | 3.75 | V | |
| | | | LVV = 1010 | 3.57 | 3.72 | 3.87 | V | |
| | | | LVV = 1011 | 3.76 | 3.92 | 4.08 | V | |
| | | | LVV = 1100 | 3.96 | 4.13 | 4.3 | V | |
| | | | LVV = 1101 | 4.16 | 4.33 | 4.5 | V | |
| | | | LVV = 1110 | 4.45 | 4.64 | 4.83 | V | |

© 2006 Microchip Technology Inc.

**TABLE 22-2: MEMORY PROGRAMMING REQUIREMENTS**

| DC Characteristics | | | Standard Operating Conditions (unless otherwise stated)<br>Operating temperature -40°C ≤ TA ≤ +85°C for industrial<br>-40°C ≤ TA ≤ +125°C for extended | | | | |
|---|---|---|---|---|---|---|---|
| **Param No.** | **Sym** | **Characteristic** | **Min** | **Typ†** | **Max** | **Units** | **Conditions** |
| | | **Internal Program Memory Programming Specifications** | | | | | |
| D110 | VPP | Voltage on $\overline{MCLR}$/VPP pin | 9.00 | — | 13.25 | V | |
| D113 | IDDP | Supply Current during Programming | — | — | 10 | mA | |
| | | **Data EEPROM Memory** | | | | | |
| D120 | ED | Cell Endurance | 100K | 1M | — | E/W | -40°C to +85°C |
| D121 | VDRW | VDD for Read/Write | VMIN | — | 5.5 | V | Using EECON to read/write<br>VMIN = Minimum operating voltage |
| D122 | TDEW | Erase/Write Cycle Time | — | 4 | — | ms | |
| D123 | TRETD | Characteristic Retention | 40 | — | — | Year | Provided no other specifications are violated |
| D124 | TREF | Number of Total Erase/Write Cycles before Refresh(1) | 1M | 10M | — | E/W | -40°C to +85°C |
| | | **Program FLASH Memory** | | | | | |
| D130 | EP | Cell Endurance | 10K | 100K | — | E/W | -40°C to +85°C |
| D131 | VPR | VDD for Read | VMIN | — | 5.5 | V | VMIN = Minimum operating voltage |
| D132 | VIE | VDD for Block Erase | 4.5 | — | 5.5 | V | Using ICSP port |
| D132A | VIW | VDD for Externally Timed Erase or Write | 4.5 | — | 5.5 | V | Using ICSP port |
| D132B | VPEW | VDD for Self-timed Write | VMIN | — | 5.5 | V | VMIN = Minimum operating voltage |
| D133 | TIE | ICSP Block Erase Cycle Time | — | 4 | — | ms | VDD ≥ 4.5V |
| D133A | TIW | ICSP Erase or Write Cycle Time (externally timed) | 1 | — | — | ms | VDD ≥ 4.5V |
| D133A | TIW | Self-timed Write Cycle Time | — | 2 | — | ms | |
| D134 | TRETD | Characteristic Retention | 40 | — | — | Year | Provided no other specifications are violated |

† Data in “Typ” column is at 5.0V, 25°C unless otherwise stated. These parameters are for design guidance only and are not tested.

**Note 1:** Refer to Section 6.8 for a more detailed discussion on data EEPROM endurance.


© 2006 Microchip Technology Inc.

## 22.3 AC (Timing) Characteristics

### 22.3.1 TIMING PARAMETER SYMBOLOGY

The timing parameter symbols have been created following one of the following formats:

1. TppS2ppS
2. TppS
3. TCC:ST (I²C specifications only)
4. Ts (I²C specifications only)

| | | | |
|---|---|---|---|
| T | | | |
| F | Frequency | T | Time |

Lowercase letters (pp) and their meanings:

| | | | |
|---|---|---|---|
| pp | | | |
| cc | CCP1 | osc | OSC1 |
| ck | CLKO | rd | $\overline{RD}$ |
| cs | $\overline{CS}$ | rw | $\overline{RD}$ or $\overline{WR}$ |
| di | SDI | sc | SCK |
| do | SDO | ss | $\overline{SS}$ |
| dt | Data in | t0 | T0CKI |
| io | I/O port | t1 | T1CKI |
| mc | $\overline{MCLR}$ | wr | $\overline{WR}$ |

Uppercase letters and their meanings:

| | | | |
|---|---|---|---|
| S | | | |
| F | Fall | P | Period |
| H | High | R | Rise |
| I | Invalid (Hi-impedance) | V | Valid |
| L | Low | Z | Hi-impedance |
| I²C only | | | |
| AA | output access | High | High |
| BUF | Bus free | Low | Low |

TCC:ST (I²C specifications only)

| | | | |
|---|---|---|---|
| CC | | | |
| HD | Hold | SU | Setup |
| ST | | | |
| DAT | DATA input hold | STO | STOP condition |
| STA | START condition | | |

### 22.3.2 TIMING CONDITIONS

The temperature and voltages specified in Table 22-3 apply to all timing specifications unless otherwise noted. Figure 22-4 specifies the load conditions for the timing specifications.

**TABLE 22-3: TEMPERATURE AND VOLTAGE SPECIFICATIONS - AC**

| | |
|---|---|
| **AC CHARACTERISTICS** | **Standard Operating Conditions (unless otherwise stated)**<br>Operating temperature -40°C ≤ TA ≤ +85°C for industrial<br>-40°C ≤ TA ≤ +125°C for extended<br>Operating voltage VDD range as described in DC spec Section 22.1 and Section 22.2.<br>LC parts operate for industrial temperatures only. |

**FIGURE 22-4: LOAD CONDITIONS FOR DEVICE TIMING SPECIFICATIONS**

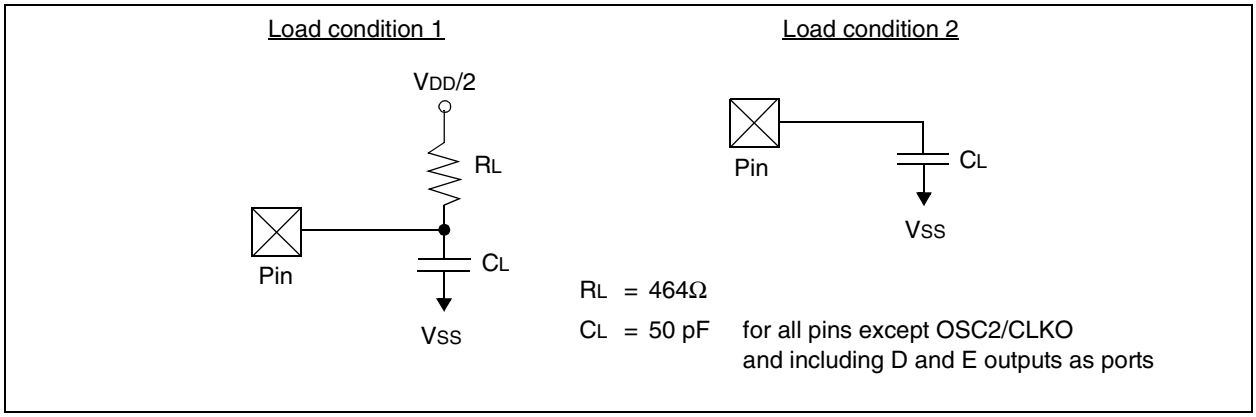



© 2006 Microchip Technology Inc.

### 22.3.3 TIMING DIAGRAMS AND SPECIFICATIONS

**FIGURE 22-5: EXTERNAL CLOCK TIMING (ALL MODES EXCEPT PLL)**

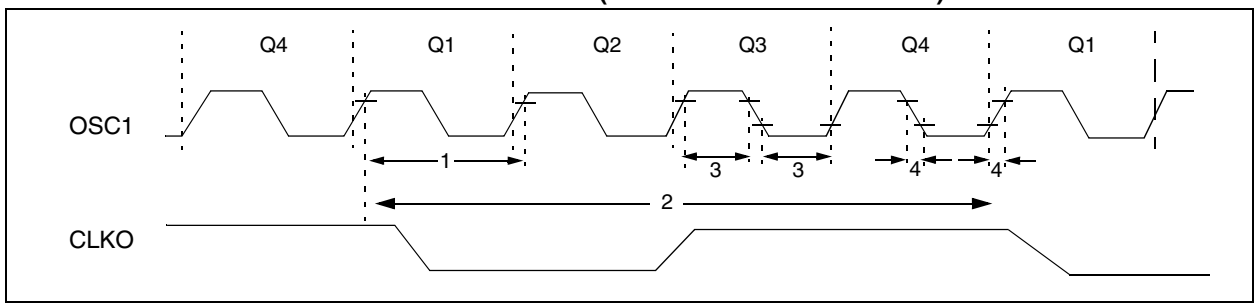


**TABLE 22-4: EXTERNAL CLOCK TIMING REQUIREMENTS**

| Param. No. | Symbol | Characteristic | Min | Max | Units | Conditions |
|---|---|---|---|---|---|---|
| 1A | FOSC | External CLKI Frequency(1) | DC | 40 | MHz | EC, ECIO, -40°C to +85°C |
| | | Oscillator Frequency(1) | DC | 25 | MHz | EC, ECIO, +85°C to +125°C |
| | | | DC | 4 | MHz | RC osc |
| | | | 0.1 | 4 | MHz | XT osc |
| | | | 4 | 25 | MHz | HS osc |
| | | | 4 | 10 | MHz | HS + PLL osc, -40°C to +85°C |
| | | | 4 | 6.25 | MHz | HS + PLL osc, +85°C to +125°C |
| | | | 5 | 200 | kHz | LP Osc mode |
| 1 | TOSC | External CLKI Period(1) | 25 | — | ns | EC, ECIO, -40°C to +85°C |
| | | Oscillator Period(1) | 40 | — | ns | EC, ECIO, +85°C to +125°C |
| | | | 250 | — | ns | RC osc |
| | | | 250 | 10,000 | ns | XT osc |
| | | | 40 | 250 | ns | HS osc |
| | | | 100 | 250 | ns | HS + PLL osc, -40°C to +85°C |
| | | | 160 | 250 | ns | HS + PLL osc, +85°C to +125°C |
| | | | 25 | — | µs | LP osc |
| 2 | TCY | Instruction Cycle Time(1) | 100 | — | ns | TCY = 4/FOSC, -40°C to +85°C |
| | | | 160 | — | ns | TCY = 4/FOSC, +85°C to +125°C |
| 3 | TosL, TosH | External Clock in (OSC1) High or Low Time | 30 | — | ns | XT osc |
| | | | 2.5 | — | µs | LP osc |
| | | | 10 | — | ns | HS osc |
| 4 | TosR, TosF | External Clock in (OSC1) Rise or Fall Time | — | 20 | ns | XT osc |
| | | | — | 50 | ns | LP osc |
| | | | — | 7.5 | ns | HS osc |

**Note 1:** Instruction cycle period (TCY) equals four times the input oscillator time-base period for all configurations except PLL. All specified values are based on characterization data for that particular oscillator type under standard operating conditions with the device executing code. Exceeding these specified limits may result in an unstable oscillator operation and/or higher than expected current consumption. All devices are tested to operate at “min.” values with an external clock applied to the OSC1/CLKI pin. When an external clock input is used, the “max.” cycle time limit is “DC” (no clock) for all devices.

© 2006 Microchip Technology Inc.

**TABLE 22-5: PLL CLOCK TIMING SPECIFICATIONS ($V_{DD}$ = 4.2 TO 5.5V)**

| Param No. | Sym | Characteristic | Min | Typ† | Max | Units | Conditions |
|---|---|---|---|---|---|---|---|
| — | FOSC | Oscillator Frequency Range | 4 | — | 10 | MHz | HS mode only |
| — | FSYS | On-chip VCO System Frequency | 16 | — | 40 | MHz | HS mode only |
| — | $t_{rc}$ | PLL Start-up Time (Lock Time) | — | — | 2 | ms | |
| — | ΔCLK | CLKO Stability (Jitter) | -2 | — | +2 | % | |

† Data in "Typ" column is at 5V, 25°C unless otherwise stated. These parameters are for design guidance only and are not tested.

**FIGURE 22-6: CLKO AND I/O TIMING**

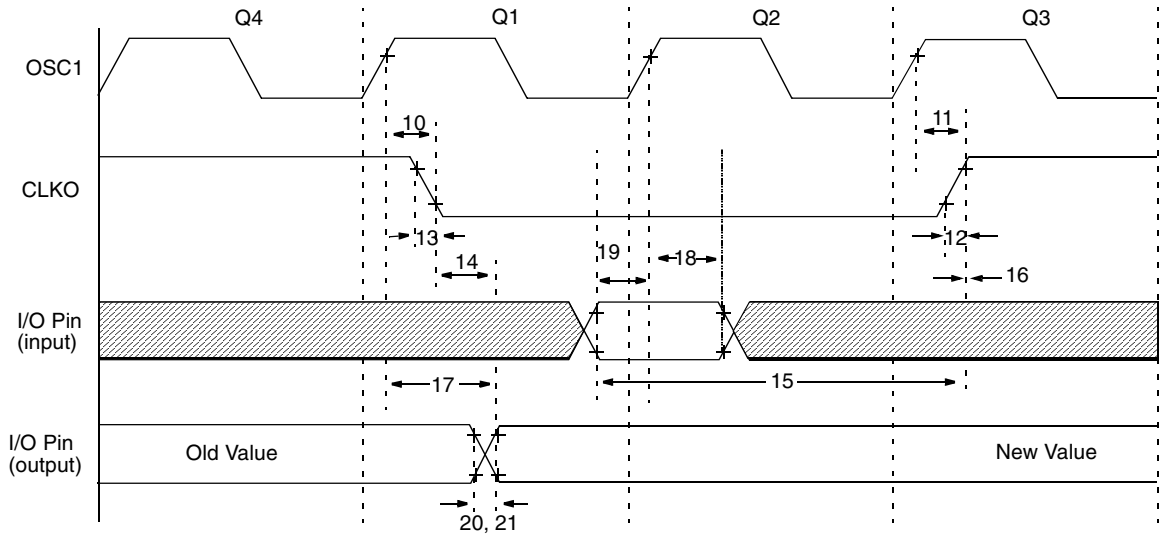


**Note:** Refer to Figure 22-4 for load conditions.


© 2006 Microchip Technology Inc.

**TABLE 22-6: CLKO AND I/O TIMING REQUIREMENTS**

| Param. No. | Symbol | Characteristic | | Min | Typ | Max | Units | Conditions |
|---|---|---|---|---|---|---|---|---|
| 10 | TosH2ckL | OSC1↑ to CLKO↓ | | — | 75 | 200 | ns | **(Note 1)** |
| 11 | TosH2ckH | OSC1↑ to CLKO↑ | | — | 75 | 200 | ns | **(Note 1)** |
| 12 | TckR | CLKO rise time | | — | 35 | 100 | ns | **(Note 1)** |
| 13 | TckF | CLKO fall time | | — | 35 | 100 | ns | **(Note 1)** |
| 14 | TckL2ioV | CLKO↓ to Port out valid | | — | — | 0.5 TCY + 20 | ns | **(Note 1)** |
| 15 | TioV2ckH | Port in valid before CLKO ↑ | | 0.25 TCY + 25 | — | — | ns | **(Note 1)** |
| 16 | TckH2ioI | Port in hold after CLKO ↑ | | 0 | — | — | ns | **(Note 1)** |
| 17 | TosH2ioV | OSC1↑ (Q1 cycle) to Port out valid | | — | 50 | 150 | ns | |
| 18 | TosH2ioI | OSC1↑ (Q2 cycle) to Port input invalid (I/O in hold time) | PIC18**F**XXX | 100 | — | — | ns | |
| 18A | | | PIC18**LF**XXX | 200 | — | — | ns | |
| 19 | TioV2osH | Port input valid to OSC1↑ (I/O in setup time) | | 0 | — | — | ns | |
| 20 | TioR | Port output rise time | PIC18**F**XXX | — | 10 | 25 | ns | |
| 20A | | | PIC18**LF**XXX | — | — | 60 | ns | VDD = 2V |
| 21 | TioF | Port output fall time | PIC18**F**XXX | — | 10 | 25 | ns | |
| 21A | | | PIC18**LF**XXX | — | — | 60 | ns | VDD = 2V |
| 22†† | TINP | INT pin high or low time | | TCY | — | — | ns | |
| 23†† | TRBP | RB7:RB4 change INT high or low time | | TCY | — | — | ns | |
| 24†† | TRCP | RC7:RC4 change INT high or low time | | 20 | | | ns | |

†† These parameters are asynchronous events not related to any internal clock edges.

**Note 1:** Measurements are taken in RC mode, where CLKO output is 4 x TOSC.

**FIGURE 22-7: RESET, WATCHDOG TIMER, OSCILLATOR START-UP TIMER AND POWER-UP TIMER TIMING**

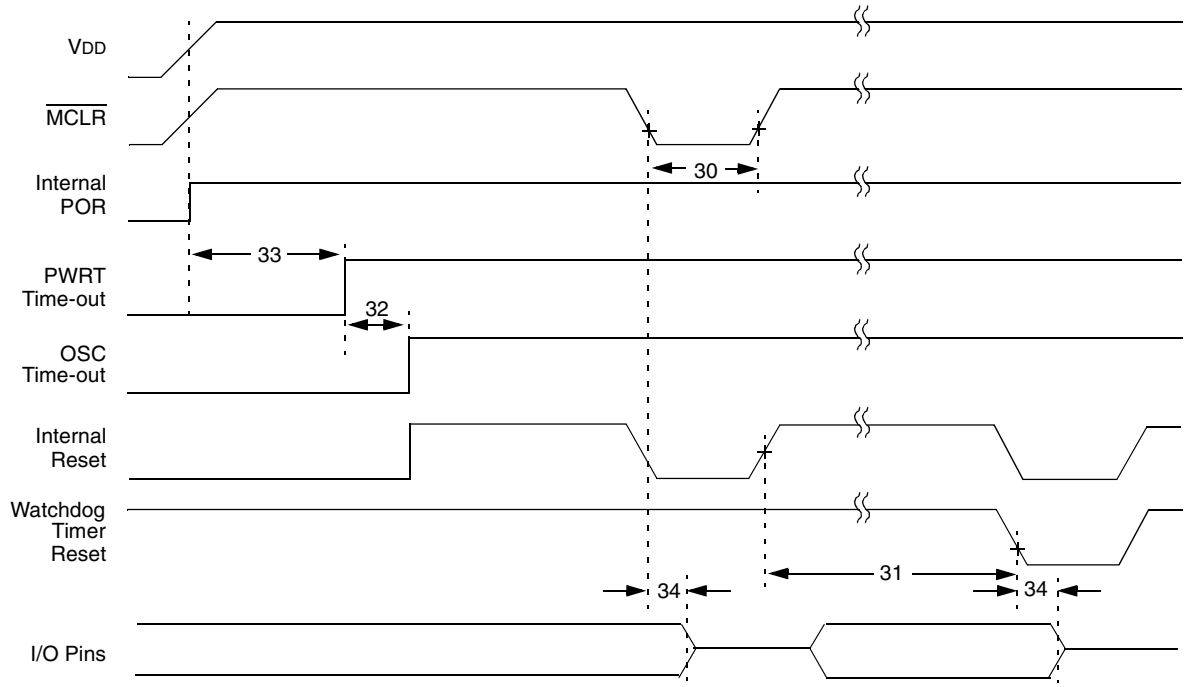


**Note:** Refer to Figure 22-4 for load conditions.

**FIGURE 22-8: BROWN-OUT RESET TIMING**

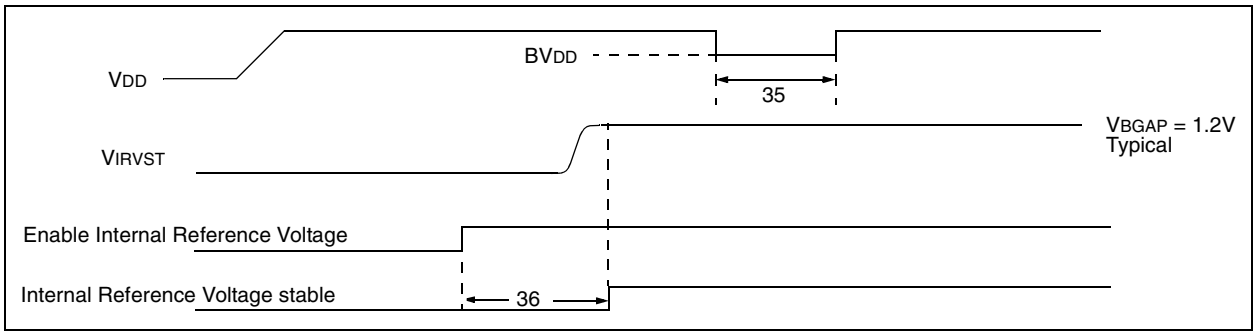


**TABLE 22-7: RESET, WATCHDOG TIMER, OSCILLATOR START-UP TIMER, POWER-UP TIMER AND BROWN-OUT RESET REQUIREMENTS**

| Param. No. | Symbol | Characteristic | Min | Typ | Max | Units | Conditions |
|---|---|---|---|---|---|---|---|
| 30 | TmcL | $\overline{\text{MCLR}}$ Pulse Width (low) | 2 | — | — | µs | |
| 31 | TWDT | Watchdog Timer Time-out Period (No Postscaler) | 7 | 18 | 33 | ms | |
| 32 | TOST | Oscillation Start-up Timer Period | 1024 TOSC | — | 1024 TOSC | — | TOSC = OSC1 period |
| 33 | TPWRT | Power up Timer Period | 28 | 72 | 132 | ms | |
| 34 | TIOZ | I/O Hi-impedance from $\overline{\text{MCLR}}$ Low or Watchdog Timer Reset | — | 2 | — | µs | |
| 35 | TBOR | Brown-out Reset Pulse Width | 200 | — | — | µs | VDD ≤ BVDD (see D005) |
| 36 | TIVRST | Time for Internal Reference Voltage to become stable | — | 20 | 500 | µs | |
| 37 | TLVD | Low Voltage Detect Pulse Width | 200 | — | — | µs | VDD ≤ VLVD (see D420) |


© 2006 Microchip Technology Inc.

**FIGURE 22-9: TIMER0 AND TIMER1 EXTERNAL CLOCK TIMINGS**

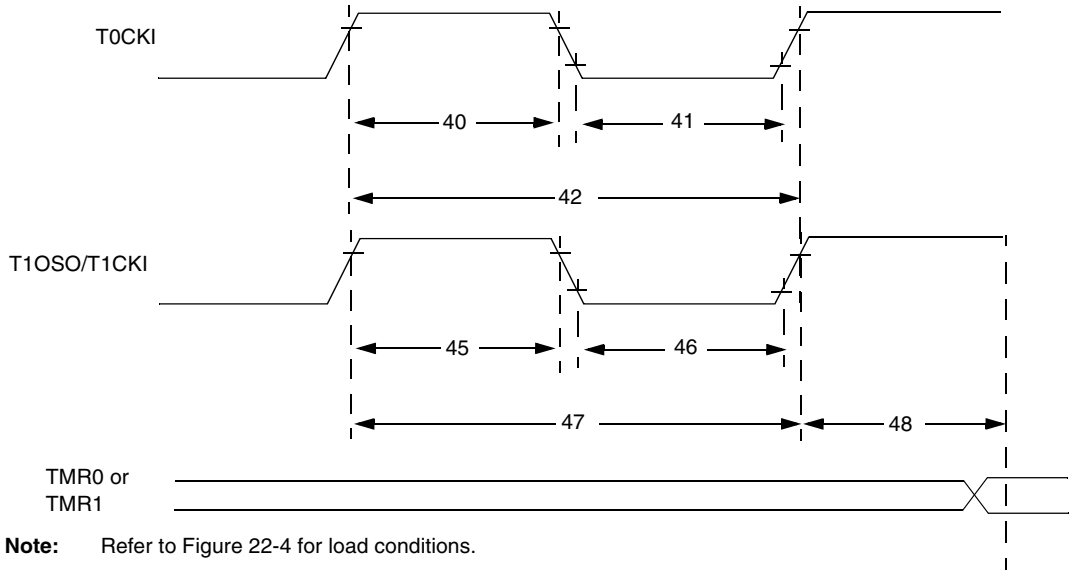


**Note:** Refer to Figure 22-4 for load conditions.

**TABLE 22-8: TIMER0 AND TIMER1 EXTERNAL CLOCK REQUIREMENTS**

| Param No. | Symbol | Characteristic | | | Min | Max | Units | Conditions |
|---|---|---|---|---|---|---|---|---|
| 40 | Tt0H | T0CKI High Pulse Width | | No Prescaler | 0.5TCY + 20 | — | ns | |
| | | | | With Prescaler | 10 | — | ns | |
| 41 | Tt0L | T0CKI Low Pulse Width | | No Prescaler | 0.5TCY + 20 | — | ns | |
| | | | | With Prescaler | 10 | — | ns | |
| 42 | Tt0P | T0CKI Period | | No Prescaler | TCY + 10 | — | ns | |
| | | | | With Prescaler | Greater of: 20 ns or TCY + 40 / N | — | ns | N = prescale value (1, 2, 4,..., 256) |
| 45 | Tt1H | T1CKI High Time | Synchronous, no prescaler | | 0.5TCY + 20 | — | ns | |
| | | | Synchronous, with prescaler | PIC18**F**XXX | 10 | — | ns | |
| | | | | PIC18**LF**XXX | 25 | — | ns | |
| | | | Asynchronous | PIC18**F**XXX | 30 | — | ns | |
| | | | | PIC18**LF**XXX | 50 | — | ns | |
| 46 | Tt1L | T1CKI Low Time | Synchronous, no prescaler | | 0.5TCY + 5 | — | ns | |
| | | | Synchronous, with prescaler | PIC18**F**XXX | 10 | — | ns | |
| | | | | PIC18**LF**XXX | 25 | — | ns | |
| | | | Asynchronous | PIC18**F**XXX | 30 | — | ns | |
| | | | | PIC18**LF**XXX | 50 | — | ns | |
| 47 | Tt1P | T1CKI input period | Synchronous | | Greater of: 20 ns or TCY + 40 / N | — | ns | N = prescale value (1, 2, 4, 8) |
| | | | Asynchronous | | 60 | — | ns | |
| | Ft1 | T1CKI oscillator input frequency range | | | DC | 50 | kHz | |
| 48 | Tcke2tmrl | Delay from external T1CKI clock edge to timer increment | | | 2 TOSC | 7 TOSC | — | |

**FIGURE 22-10: CAPTURE/COMPARE/PWM TIMINGS (CCP1 AND CCP2)**

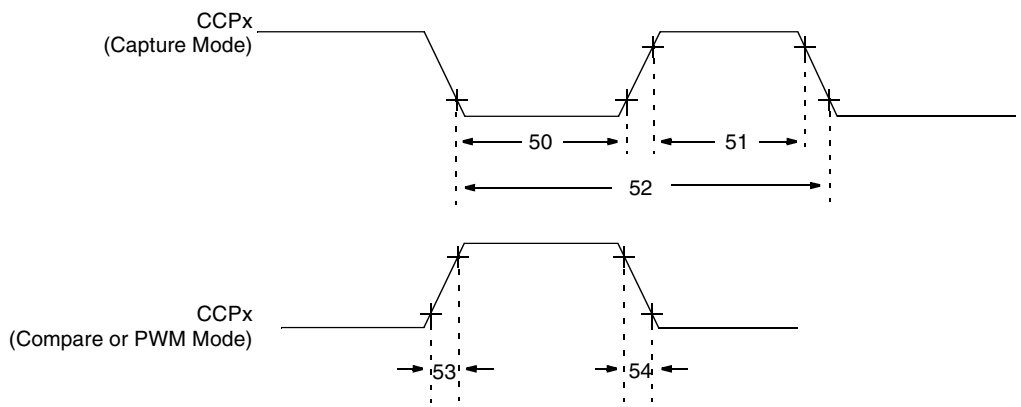


**Note:** Refer to Figure 22-4 for load conditions.

**TABLE 22-9: CAPTURE/COMPARE/PWM REQUIREMENTS (CCP1 AND CCP2)**

| Param. No. | Symbol | Characteristic | | | Min | Max | Units | Conditions |
|---|---|---|---|---|---|---|---|---|
| 50 | TccL | CCPx input low time | No Prescaler | | 0.5 TCY + 20 | — | ns | |
| | | | With Prescaler | PIC18**F**XXX | 10 | — | ns | |
| | | | | PIC18**LF**XXX | 20 | — | ns | |
| 51 | TccH | CCPx input high time | No Prescaler | | 0.5 TCY + 20 | — | ns | |
| | | | With Prescaler | PIC18**F**XXX | 10 | — | ns | |
| | | | | PIC18**LF**XXX | 20 | — | ns | |
| 52 | TccP | CCPx input period | | | $\frac{3\ T_{CY} + 40}{N}$ | — | ns | N = prescale value (1,4 or 16) |
| 53 | TccR | CCPx output fall time | | PIC18**F**XXX | — | 25 | ns | |
| | | | | PIC18**LF**XXX | — | 60 | ns | VDD = 2V |
| 54 | TccF | CCPx output fall time | | PIC18**F**XXX | — | 25 | ns | |
| | | | | PIC18**LF**XXX | — | 60 | ns | VDD = 2V |


© 2006 Microchip Technology Inc.

**FIGURE 22-11: PARALLEL SLAVE PORT TIMING (PIC18F4X2)**

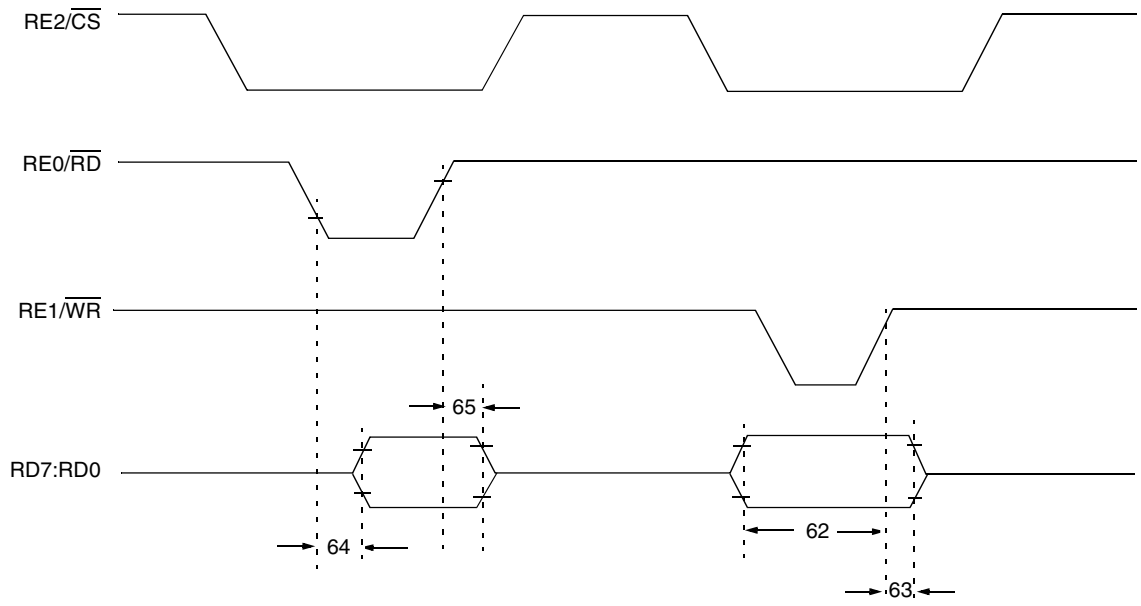


**Note:** Refer to Figure 22-4 for load conditions.

**TABLE 22-10: PARALLEL SLAVE PORT REQUIREMENTS (PIC18F4X2)**

| Param. No. | Symbol | Characteristic | | Min | Max | Units | Conditions |
|---|---|---|---|---|---|---|---|
| 62 | TdtV2wrH | Data in valid before $\overline{WR}$↑ or $\overline{CS}$↑ (setup time) | | 20<br>25 | —<br>— | ns<br>ns | <br>Extended Temp. Range |
| 63 | TwrH2dtI | $\overline{WR}$↑ or $\overline{CS}$↑ to data–in invalid (hold time) | PIC18**F**XXX | 20 | — | ns | |
| | | | PIC18**LF**XXX | 35 | — | ns | VDD = 2V |
| 64 | TrdL2dtV | $\overline{RD}$↓ and $\overline{CS}$↓ to data–out valid | | —<br>— | 80<br>90 | ns<br>ns | <br>Extended Temp. Range |
| 65 | TrdH2dtI | $\overline{RD}$↑ or $\overline{CS}$↓ to data–out invalid | | 10 | 30 | ns | |
| 66 | TibfINH | Inhibit of the IBF flag bit being cleared from $\overline{WR}$↑ or $\overline{CS}$↑ | | — | 3 TCY | | |

**FIGURE 22-12: EXAMPLE SPI MASTER MODE TIMING (CKE = 0)**

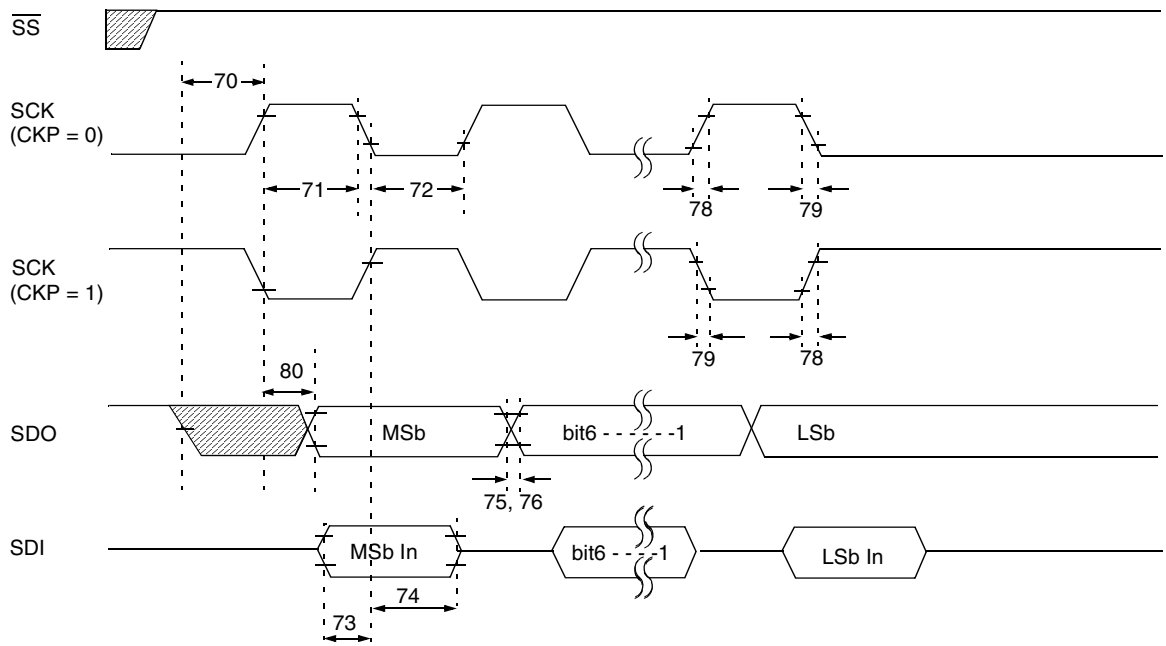


**Note:** Refer to Figure 22-4 for load conditions.

**TABLE 22-11: EXAMPLE SPI MODE REQUIREMENTS (MASTER MODE, CKE = 0)**

| Param. No. | Symbol | Characteristic | | Min | Max | Units | Conditions |
|---|---|---|---|---|---|---|---|
| 70 | TssL2scH, TssL2scL | $\overline{SS}$↓ to SCK↓ or SCK↑ input | | TCY | — | ns | |
| 71 | TscH | SCK input high time (Slave mode) | Continuous | 1.25 TCY + 30 | — | ns | |
| 71A | | | Single Byte | 40 | — | ns | **(Note 1)** |
| 72 | TscL | SCK input low time (Slave mode) | Continuous | 1.25 TCY + 30 | — | ns | |
| 72A | | | Single Byte | 40 | — | ns | **(Note 1)** |
| 73 | TdiV2scH, TdiV2scL | Setup time of SDI data input to SCK edge | | 100 | — | ns | |
| 73A | TB2B | Last clock edge of Byte1 to the 1st clock edge of Byte2 | | 1.5 TCY + 40 | — | ns | **(Note 2)** |
| 74 | TscH2diL, TscL2diL | Hold time of SDI data input to SCK edge | | 100 | — | ns | |
| 75 | TdoR | SDO data output rise time | PIC18**F**XXX | — | 25 | ns | |
| | | | PIC18**LF**XXX | — | 60 | ns | VDD = 2V |
| 76 | TdoF | SDO data output fall time | PIC18**F**XXX | — | 25 | ns | |
| | | | PIC18**LF**XXX | — | 60 | ns | VDD = 2V |
| 78 | TscR | SCK output rise time (Master mode) | PIC18**F**XXX | — | 25 | ns | |
| | | | PIC18**LF**XXX | — | 60 | ns | VDD = 2V |
| 79 | TscF | SCK output fall time (Master mode) | PIC18**F**XXX | — | 25 | ns | |
| | | | PIC18**LF**XXX | — | 60 | ns | VDD = 2V |
| 80 | TscH2doV, TscL2doV | SDO data output valid after SCK edge | PIC18**F**XXX | — | 50 | ns | |
| | | | PIC18**LF**XXX | — | 150 | ns | VDD = 2V |

**Note 1:** Requires the use of Parameter # 73A.
**2:** Only if Parameter # 71A and # 72A are used.


© 2006 Microchip Technology Inc.

**FIGURE 22-13: EXAMPLE SPI MASTER MODE TIMING (CKE = 1)**

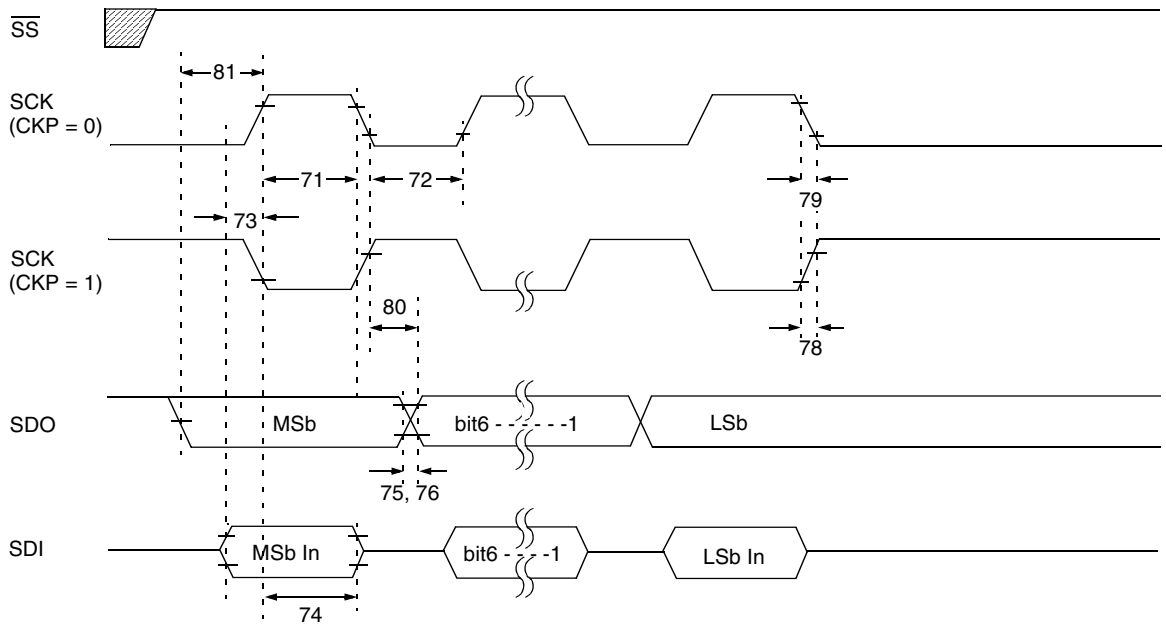


**Note:** Refer to Figure 22-4 for load conditions.

**TABLE 22-12: EXAMPLE SPI MODE REQUIREMENTS (MASTER MODE, CKE = 1)**

| Param. No. | Symbol | Characteristic | | Min | Max | Units | Conditions |
|---|---|---|---|---|---|---|---|
| 71 | TscH | SCK input high time (Slave mode) | Continuous | 1.25 TCY + 30 | — | ns | |
| 71A | | | Single Byte | 40 | — | ns | **(Note 1)** |
| 72 | TscL | SCK input low time (Slave mode) | Continuous | 1.25 TCY + 30 | — | ns | |
| 72A | | | Single Byte | 40 | — | ns | **(Note 1)** |
| 73 | TdiV2scH, TdiV2scL | Setup time of SDI data input to SCK edge | | 100 | — | ns | |
| 73A | TB2B | Last clock edge of Byte1 to the 1st clock edge of Byte2 | | 1.5 TCY + 40 | — | ns | **(Note 2)** |
| 74 | TscH2diL, TscL2diL | Hold time of SDI data input to SCK edge | | 100 | — | ns | |
| 75 | TdoR | SDO data output rise time | PIC18**F**XXX | — | 25 | ns | |
| | | | PIC18**LF**XXX | — | 60 | ns | VDD = 2V |
| 76 | TdoF | SDO data output fall time | PIC18**F**XXX | — | 25 | ns | |
| | | | PIC18**LF**XXX | — | 60 | ns | VDD = 2V |
| 78 | TscR | SCK output rise time (Master mode) | PIC18**F**XXX | — | 25 | ns | |
| | | | PIC18**LF**XXX | — | 60 | ns | VDD = 2V |
| 79 | TscF | SCK output fall time (Master mode) | PIC18**F**XXX | — | 25 | ns | |
| | | | PIC18**LF**XXX | — | 60 | ns | VDD = 2V |
| 80 | TscH2doV, TscL2doV | SDO data output valid after SCK edge | PIC18**F**XXX | — | 50 | ns | |
| | | | PIC18**LF**XXX | — | 150 | ns | VDD = 2V |
| 81 | TdoV2scH, TdoV2scL | SDO data output setup to SCK edge | | TCY | — | ns | |

**Note 1:** Requires the use of Parameter # 73A.
**2:** Only if Parameter # 71A and # 72A are used.

**FIGURE 22-14: EXAMPLE SPI SLAVE MODE TIMING (CKE = 0)**

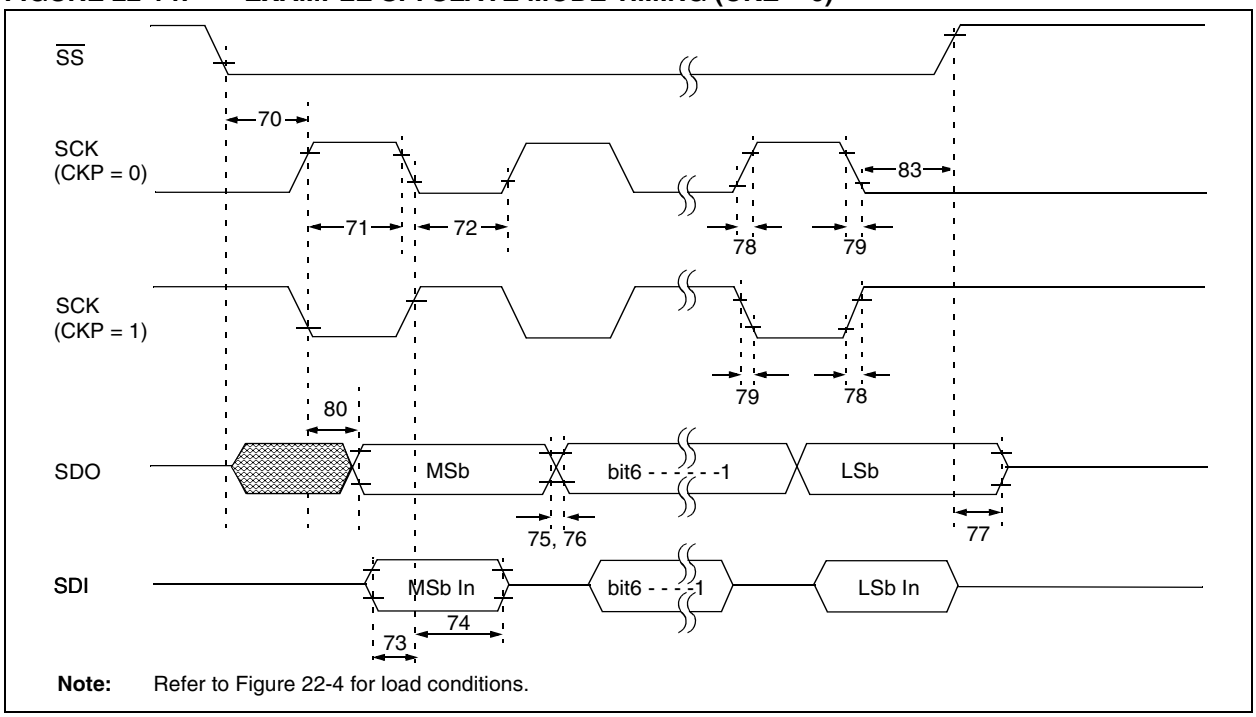


**TABLE 22-13: EXAMPLE SPI MODE REQUIREMENTS (SLAVE MODE TIMING (CKE = 0))**

| Param. No. | Symbol | Characteristic | | Min | Max | Units | Conditions |
|---|---|---|---|---|---|---|---|
| 70 | TssL2scH, TssL2scL | $\overline{SS}$↓ to SCK↓ or SCK↑ input | | TCY | — | ns | |
| 71 | TscH | SCK input high time (Slave mode) | Continuous | 1.25 TCY + 30 | — | ns | |
| 71A | | | Single Byte | 40 | — | ns | **(Note 1)** |
| 72 | TscL | SCK input low time (Slave mode) | Continuous | 1.25 TCY + 30 | — | ns | |
| 72A | | | Single Byte | 40 | — | ns | **(Note 1)** |
| 73 | TdiV2scH, TdiV2scL | Setup time of SDI data input to SCK edge | | 100 | — | ns | |
| 73A | TB2B | Last clock edge of Byte1 to the first clock edge of Byte2 | | 1.5 TCY + 40 | — | ns | **(Note 2)** |
| 74 | TscH2diL, TscL2diL | Hold time of SDI data input to SCK edge | | 100 | — | ns | |
| 75 | TdoR | SDO data output rise time | PIC18**F**XXX | — | 25 | ns | |
| | | | PIC18**LF**XXX | — | 60 | ns | VDD = 2V |
| 76 | TdoF | SDO data output fall time | PIC18**F**XXX | — | 25 | ns | |
| | | | PIC18**LF**XXX | — | 60 | ns | VDD = 2V |
| 77 | TssH2doZ | $\overline{SS}$↑ to SDO output hi-impedance | | 10 | 50 | ns | |
| 78 | TscR | SCK output rise time (Master mode) | PIC18**F**XXX | — | 25 | ns | |
| | | | PIC18**LF**XXX | — | 60 | ns | VDD = 2V |
| 79 | TscF | SCK output fall time (Master mode) | PIC18**F**XXX | — | 25 | ns | |
| | | | PIC18**LF**XXX | — | 60 | ns | VDD = 2V |
| 80 | TscH2doV, TscL2doV | SDO data output valid after SCK edge | PIC18**F**XXX | — | 50 | ns | |
| | | | PIC18**LF**XXX | — | 150 | ns | VDD = 2V |
| 83 | TscH2ssH, TscL2ssH | $\overline{SS}$ ↑ after SCK edge | | 1.5 TCY + 40 | — | ns | |

**Note 1:** Requires the use of Parameter # 73A.
**2:** Only if Parameter # 71A and # 72A are used.


© 2006 Microchip Technology Inc.

**FIGURE 22-15: EXAMPLE SPI SLAVE MODE TIMING (CKE = 1)**

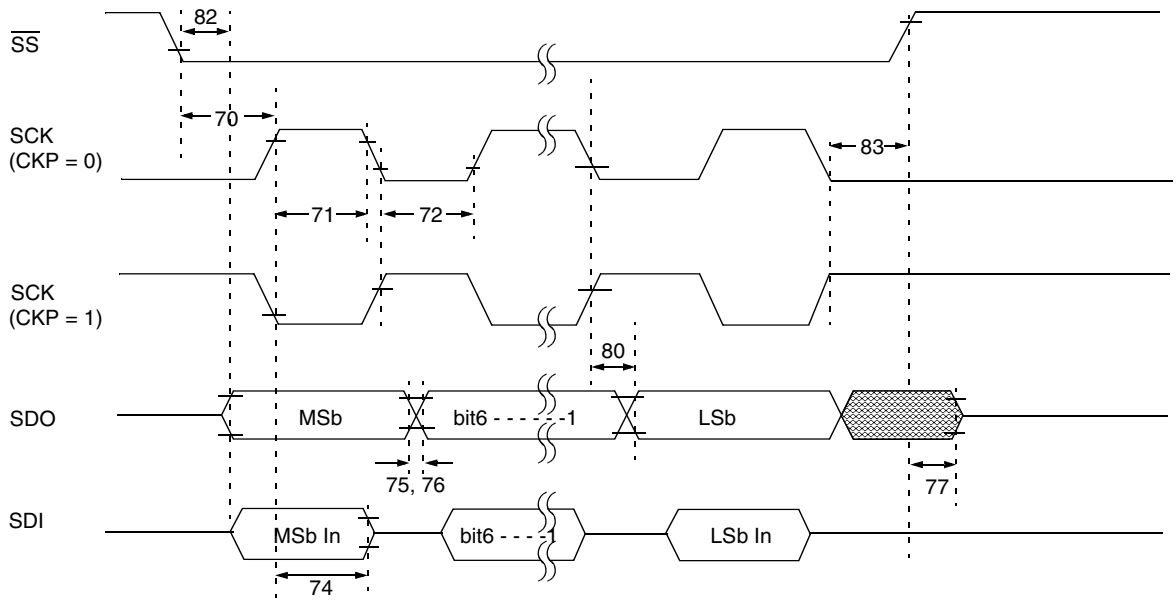


**Note:** Refer to Figure 22-4 for load conditions.

**TABLE 22-14: EXAMPLE SPI SLAVE MODE REQUIREMENTS (CKE = 1)**

| Param. No. | Symbol | Characteristic | | Min | Max | Units | Conditions |
|---|---|---|---|---|---|---|---|
| 70 | TssL2scH, TssL2scL | $\overline{SS}$↓ to SCK↓ or SCK↑ input | | TCY | — | ns | |
| 71 | TscH | SCK input high time (Slave mode) | Continuous | 1.25 TCY + 30 | — | ns | |
| 71A | | | Single Byte | 40 | — | ns | **(Note 1)** |
| 72 | TscL | SCK input low time (Slave mode) | Continuous | 1.25 TCY + 30 | — | ns | |
| 72A | | | Single Byte | 40 | — | ns | **(Note 1)** |
| 73A | TB2B | Last clock edge of Byte1 to the first clock edge of Byte2 | | 1.5 TCY + 40 | — | ns | **(Note 2)** |
| 74 | TscH2diL, TscL2diL | Hold time of SDI data input to SCK edge | | 100 | — | ns | |
| 75 | TdoR | SDO data output rise time | PIC18**F**XXX | — | 25 | ns | |
| | | | PIC18**LF**XXX | — | 60 | ns | VDD = 2V |
| 76 | TdoF | SDO data output fall time | PIC18**F**XXX | — | 25 | ns | |
| | | | PIC18**LF**XXX | — | 60 | ns | VDD = 2V |
| 77 | TssH2doZ | $\overline{SS}$↑ to SDO output hi-impedance | | 10 | 50 | ns | |
| 78 | TscR | SCK output rise time (Master mode) | PIC18**F**XXX | — | 25 | ns | |
| | | | PIC18**LF**XXX | — | 60 | ns | VDD = 2V |
| 79 | TscF | SCK output fall time (Master mode) | PIC18**F**XXX | — | 25 | ns | |
| | | | PIC18**LF**XXX | — | 60 | ns | VDD = 2V |
| 80 | TscH2doV, TscL2doV | SDO data output valid after SCK edge | PIC18**F**XXX | — | 50 | ns | |
| | | | PIC18**LF**XXX | — | 150 | ns | VDD = 2V |
| 82 | TssL2doV | SDO data output valid after $\overline{SS}$↓ edge | PIC18**F**XXX | — | 50 | ns | |
| | | | PIC18**LF**XXX | — | 150 | ns | VDD = 2V |
| 83 | TscH2ssH, TscL2ssH | $\overline{SS}$ ↑ after SCK edge | | 1.5 TCY + 40 | — | ns | |

**Note 1:** Requires the use of Parameter # 73A.
**2:** Only if Parameter # 71A and # 72A are used.

**FIGURE 22-16: I²C BUS START/STOP BITS TIMING**

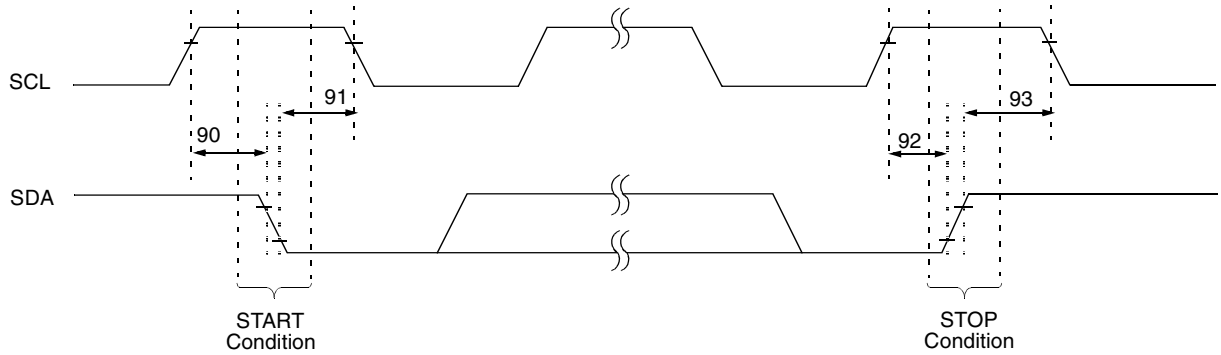


**Note:** Refer to Figure 22-4 for load conditions.

**TABLE 22-15: I²C BUS START/STOP BITS REQUIREMENTS (SLAVE MODE)**

| Param. No. | Symbol | Characteristic | | Min | Max | Units | Conditions |
|---|---|---|---|---|---|---|---|
| 90 | TSU:STA | START condition Setup time | 100 kHz mode | 4700 | — | ns | Only relevant for Repeated START condition |
| | | | 400 kHz mode | 600 | — | | |
| 91 | THD:STA | START condition Hold time | 100 kHz mode | 4000 | — | ns | After this period, the first clock pulse is generated |
| | | | 400 kHz mode | 600 | — | | |
| 92 | TSU:STO | STOP condition Setup time | 100 kHz mode | 4700 | — | ns | |
| | | | 400 kHz mode | 600 | — | | |
| 93 | THD:STO | STOP condition Hold time | 100 kHz mode | 4000 | — | ns | |
| | | | 400 kHz mode | 600 | — | | |

**FIGURE 22-17: I²C BUS DATA TIMING**

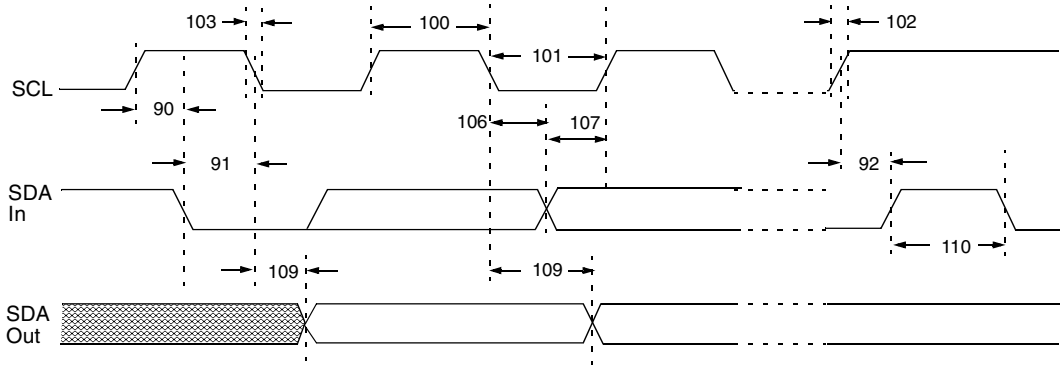


**Note:** Refer to Figure 22-4 for load conditions.


© 2006 Microchip Technology Inc.

## TABLE 22-16: I²C BUS DATA REQUIREMENTS (SLAVE MODE)

| Param. No. | Symbol | Characteristic | | Min | Max | Units | Conditions |
|---|---|---|---|---|---|---|---|
| 100 | THIGH | Clock high time | 100 kHz mode | 4.0 | — | μs | PIC18FXXX must operate at a minimum of 1.5 MHz |
| | | | 400 kHz mode | 0.6 | — | μs | PIC18FXXX must operate at a minimum of 10 MHz |
| | | | SSP Module | 1.5 TCY | — | | |
| 101 | TLOW | Clock low time | 100 kHz mode | 4.7 | — | μs | PIC18FXXX must operate at a minimum of 1.5 MHz |
| | | | 400 kHz mode | 1.3 | — | μs | PIC18FXXX must operate at a minimum of 10 MHz |
| | | | SSP Module | 1.5 TCY | — | | |
| 102 | TR | SDA and SCL rise time | 100 kHz mode | — | 1000 | ns | |
| | | | 400 kHz mode | 20 + 0.1 CB | 300 | ns | CB is specified to be from 10 to 400 pF |
| 103 | TF | SDA and SCL fall time | 100 kHz mode | — | 1000 | ns | VDD ≥ 4.2V |
| | | | 400 kHz mode | 20 + 0.1 CB | 300 | ns | VDD ≥ 4.2V |
| 90 | TSU:STA | START condition setup time | 100 kHz mode | 4.7 | — | μs | Only relevant for Repeated START condition |
| | | | 400 kHz mode | 0.6 | — | μs | |
| 91 | THD:STA | START condition hold time | 100 kHz mode | 4.0 | — | μs | After this period, the first clock pulse is generated |
| | | | 400 kHz mode | 0.6 | — | μs | |
| 106 | THD:DAT | Data input hold time | 100 kHz mode | 0 | — | ns | |
| | | | 400 kHz mode | 0 | 0.9 | μs | |
| 107 | TSU:DAT | Data input setup time | 100 kHz mode | 250 | — | ns | **(Note 2)** |
| | | | 400 kHz mode | 100 | — | ns | |
| 92 | TSU:STO | STOP condition setup time | 100 kHz mode | 4.7 | — | μs | |
| | | | 400 kHz mode | 0.6 | — | μs | |
| 109 | TAA | Output valid from clock | 100 kHz mode | — | 3500 | ns | **(Note 1)** |
| | | | 400 kHz mode | — | — | ns | |
| 110 | TBUF | Bus free time | 100 kHz mode | 4.7 | — | μs | Time the bus must be free before a new transmission can start |
| | | | 400 kHz mode | 1.3 | — | μs | |
| D102 | CB | Bus capacitive loading | | — | 400 | pF | |

**Note 1:** As a transmitter, the device must provide this internal minimum delay time to bridge the undefined region (min. 300 ns) of the falling edge of SCL to avoid unintended generation of START or STOP conditions.

**2:** A Fast mode I²C bus device can be used in a Standard mode I²C bus system, but the requirement TSU:DAT ≥ 250 ns must then be met. This will automatically be the case if the device does not stretch the LOW period of the SCL signal. If such a device does stretch the LOW period of the SCL signal, it must output the next data bit to the SDA line.
TR max. + TSU:DAT = 1000 + 250 = 1250 ns (according to the Standard mode I²C bus specification) before the SCL line is released.

**FIGURE 22-18: MASTER SSP I²C BUS START/STOP BITS TIMING WAVEFORMS**

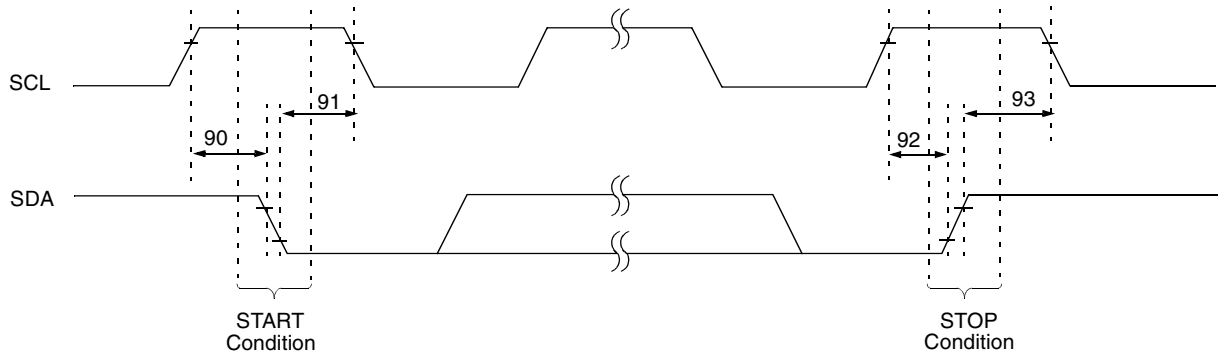


**Note:** Refer to Figure 22-4 for load conditions.

**TABLE 22-17: MASTER SSP I²C BUS START/STOP BITS REQUIREMENTS**

| Param. No. | Symbol | Characteristic | | Min | Max | Units | Conditions |
|---|---|---|---|---|---|---|---|
| 90 | TSU:STA | START condition Setup time | 100 kHz mode | 2(TOSC)(BRG + 1) | — | ns | Only relevant for Repeated START condition |
| | | | 400 kHz mode | 2(TOSC)(BRG + 1) | — | | |
| | | | 1 MHz mode(1) | 2(TOSC)(BRG + 1) | — | | |
| 91 | THD:STA | START condition Hold time | 100 kHz mode | 2(TOSC)(BRG + 1) | — | ns | After this period, the first clock pulse is generated |
| | | | 400 kHz mode | 2(TOSC)(BRG + 1) | — | | |
| | | | 1 MHz mode(1) | 2(TOSC)(BRG + 1) | — | | |
| 92 | TSU:STO | STOP condition Setup time | 100 kHz mode | 2(TOSC)(BRG + 1) | — | ns | |
| | | | 400 kHz mode | 2(TOSC)(BRG + 1) | — | | |
| | | | 1 MHz mode(1) | 2(TOSC)(BRG + 1) | — | | |
| 93 | THD:STO | STOP condition Hold time | 100 kHz mode | 2(TOSC)(BRG + 1) | — | ns | |
| | | | 400 kHz mode | 2(TOSC)(BRG + 1) | — | | |
| | | | 1 MHz mode(1) | 2(TOSC)(BRG + 1) | — | | |

**Note 1:** Maximum pin capacitance = 10 pF for all I²C pins.

**FIGURE 22-19: MASTER SSP I²C BUS DATA TIMING**

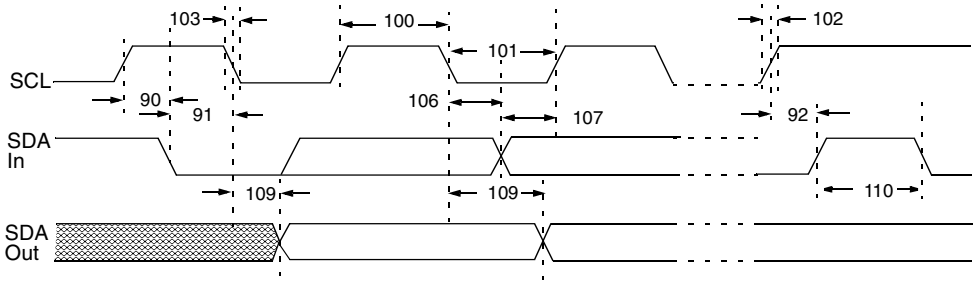


**Note:** Refer to Figure 22-4 for load conditions.


© 2006 Microchip Technology Inc.

**TABLE 22-18: MASTER SSP I²C BUS DATA REQUIREMENTS**

| Param. No. | Symbol | Characteristic | | Min | Max | Units | Conditions |
|---|---|---|---|---|---|---|---|
| 100 | THIGH | Clock high time | 100 kHz mode | 2(TOSC)(BRG + 1) | — | ms | |
| | | | 400 kHz mode | 2(TOSC)(BRG + 1) | — | ms | |
| | | | 1 MHz mode(1) | 2(TOSC)(BRG + 1) | — | ms | |
| 101 | TLOW | Clock low time | 100 kHz mode | 2(TOSC)(BRG + 1) | — | ms | |
| | | | 400 kHz mode | 2(TOSC)(BRG + 1) | — | ms | |
| | | | 1 MHz mode(1) | 2(TOSC)(BRG + 1) | — | ms | |
| 102 | TR | SDA and SCL rise time | 100 kHz mode | — | 1000 | ns | CB is specified to be from 10 to 400 pF |
| | | | 400 kHz mode | 20 + 0.1 CB | 300 | ns | |
| | | | 1 MHz mode(1) | — | 300 | ns | |
| 103 | TF | SDA and SCL fall time | 100 kHz mode | — | 1000 | ns | VDD ≥ 4.2V |
| | | | 400 kHz mode | 20 + 0.1 CB | 300 | ns | VDD ≥ 4.2V |
| 90 | TSU:STA | START condition setup time | 100 kHz mode | 2(TOSC)(BRG + 1) | — | ms | Only relevant for Repeated START condition |
| | | | 400 kHz mode | 2(TOSC)(BRG + 1) | — | ms | |
| | | | 1 MHz mode(1) | 2(TOSC)(BRG + 1) | — | ms | |
| 91 | THD:STA | START condition hold time | 100 kHz mode | 2(TOSC)(BRG + 1) | — | ms | After this period, the first clock pulse is generated |
| | | | 400 kHz mode | 2(TOSC)(BRG + 1) | — | ms | |
| | | | 1 MHz mode(1) | 2(TOSC)(BRG + 1) | — | ms | |
| 106 | THD:DAT | Data input hold time | 100 kHz mode | 0 | — | ns | |
| | | | 400 kHz mode | 0 | 0.9 | ms | |
| 107 | TSU:DAT | Data input setup time | 100 kHz mode | 250 | — | ns | **(Note 2)** |
| | | | 400 kHz mode | 100 | — | ns | |
| 92 | TSU:STO | STOP condition setup time | 100 kHz mode | 2(TOSC)(BRG + 1) | — | ms | |
| | | | 400 kHz mode | 2(TOSC)(BRG + 1) | — | ms | |
| | | | 1 MHz mode(1) | 2(TOSC)(BRG + 1) | — | ms | |
| 109 | TAA | Output valid from clock | 100 kHz mode | — | 3500 | ns | |
| | | | 400 kHz mode | — | 1000 | ns | |
| | | | 1 MHz mode(1) | — | — | ns | |
| 110 | TBUF | Bus free time | 100 kHz mode | 4.7 | — | ms | Time the bus must be free before a new transmission can start |
| | | | 400 kHz mode | 1.3 | — | ms | |
| D102 | CB | Bus capacitive loading | | — | 400 | pF | |

**Note 1:** Maximum pin capacitance = 10 pF for all I²C pins.

**2:** A Fast mode I²C bus device can be used in a Standard mode I²C bus system, but parameter #107 ≥ 250 ns must then be met. This will automatically be the case if the device does not stretch the LOW period of the SCL signal. If such a device does stretch the LOW period of the SCL signal, it must output the next data bit to the SDA line, parameter #102 + parameter #107 = 1000 + 250 = 1250 ns (for 100 kHz mode) before the SCL line is released.

© 2006 Microchip Technology Inc.

**FIGURE 22-20: USART SYNCHRONOUS TRANSMISSION (MASTER/SLAVE) TIMING**

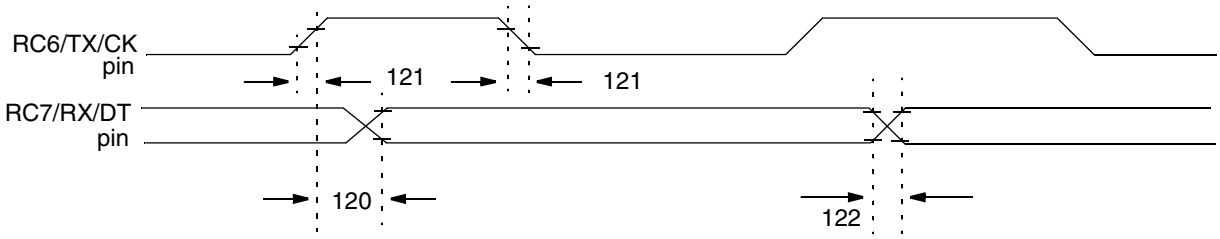


**Note:** Refer to Figure 22-4 for load conditions.

**TABLE 22-19: USART SYNCHRONOUS TRANSMISSION REQUIREMENTS**

| Param. No. | Symbol | Characteristic | | Min | Max | Units | Conditions |
|---|---|---|---|---|---|---|---|
| 120 | TckH2dtV | SYNC XMIT (MASTER & SLAVE)<br>Clock high to data out valid | PIC18**F**XXX | — | 50 | ns | |
| | | | PIC18**LF**XXX | — | 150 | ns | VDD = 2V |
| 121 | Tckr | Clock out rise time and fall time (Master mode) | PIC18**F**XXX | — | 25 | ns | |
| | | | PIC18**LF**XXX | — | 60 | ns | VDD = 2V |
| 122 | Tdtr | Data out rise time and fall time | PIC18**F**XXX | — | 25 | ns | |
| | | | PIC18**LF**XXX | — | 60 | ns | VDD = 2V |

**FIGURE 22-21: USART SYNCHRONOUS RECEIVE (MASTER/SLAVE) TIMING**

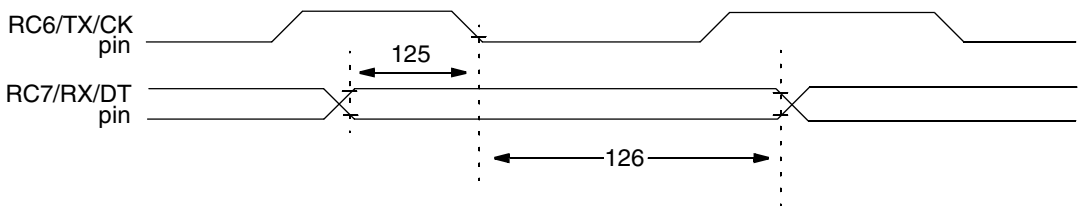


**Note:** Refer to Figure 22-4 for load conditions.

**TABLE 22-20: USART SYNCHRONOUS RECEIVE REQUIREMENTS**

| Param. No. | Symbol | Characteristic | | Min | Max | Units | Conditions |
|---|---|---|---|---|---|---|---|
| 125 | TdtV2ckl | SYNC RCV (MASTER & SLAVE)<br>Data hold before CK ↓ (DT hold time) | | 10 | — | ns | |
| 126 | TckL2dtl | Data hold after CK ↓ (DT hold time) | PIC18**F**XXX | 15 | — | ns | |
| | | | PIC18**LF**XXX | 20 | — | ns | VDD = 2V |


© 2006 Microchip Technology Inc.

**TABLE 22-21: A/D CONVERTER CHARACTERISTICS: PIC18FXX2 (INDUSTRIAL, EXTENDED) PIC18LFXX2 (INDUSTRIAL)**

| Param No. | Symbol | Characteristic | Min | Typ | Max | Units | Conditions |
|---|---|---|---|---|---|---|---|
| A01 | NR | Resolution | — | — | 10 | bit | |
| A03 | EIL | Integral linearity error | — | — | <±1 | LSb | VREF = VDD = 5.0V |
| A04 | EDL | Differential linearity error | — | — | <±1 | LSb | VREF = VDD = 5.0V |
| A05 | EG | Gain error | — | — | <±1 | LSb | VREF = VDD = 5.0V |
| A06 | EOFF | Offset error | — | — | <±1.5 | LSb | VREF = VDD = 5.0V |
| A10 | — | Monotonicity | guaranteed(2) | | | — | VSS ≤ VAIN ≤ VREF |
| A20<br>A20A | VREF | Reference Voltage<br>(VREFH – VREFL) | 1.8V<br>3V | —<br>— | —<br>— | V<br>V | VDD < 3.0V<br>VDD ≥ 3.0V |
| A21 | VREFH | Reference voltage High | AVSS | — | AVDD + 0.3V | V | |
| A22 | VREFL | Reference voltage Low | AVSS – 0.3V | — | VREFH | V | |
| A25 | VAIN | Analog input voltage | AVSS – 0.3V | — | AVDD + 0.3V | V | VDD ≥ 2.5V **(Note 3)** |
| A30 | ZAIN | Recommended impedance of analog voltage source | — | — | 2.5 | kΩ | **(Note 4)** |
| A50 | IREF | VREF input current **(Note 1)** | —<br>— | —<br>— | 5<br>150 | μA<br>μA | During VAIN acquisition<br>During A/D conversion cycle |

**Note 1:** VSS ≤ VAIN ≤ VREF

**2:** The A/D conversion result never decreases with an increase in the Input Voltage, and has no missing codes.

**3:** For VDD < 2.5V, VAIN should be limited to < .5 VDD.

**4:** Maximum allowed impedance for analog voltage source is 10 kΩ. This requires higher acquisition times.

**FIGURE 22-22: A/D CONVERSION TIMING**

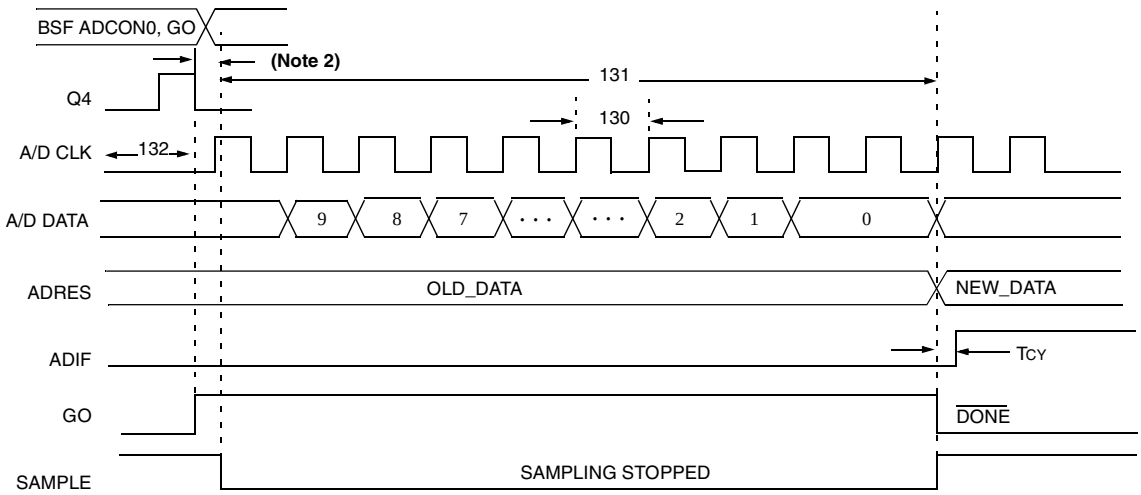


**Note 1:** If the A/D clock source is selected as RC, a time of TCY is added before the A/D clock starts. This allows the SLEEP instruction to be executed.

**2:** This is a minimal RC delay (typically 100 nS), which also disconnects the holding capacitor from the analog input.

**TABLE 22-22: A/D CONVERSION REQUIREMENTS**

| Param No. | Symbol | Characteristic | | Min | Max | Units | Conditions |
|---|---|---|---|---|---|---|---|
| 130 | TAD | A/D clock period | PIC18**F**XXX | 1.6 | 20(4) | μs | TOSC based |
| | | | PIC18**F**XXX | 2.0 | 6.0 | μs | A/D RC mode |
| 131 | TCNV | Conversion time (not including acquisition time) **(Note 1)** | | 11 | 12 | TAD | |
| 132 | TACQ | Acquisition time **(Note 2)** | | 5<br>10 | —<br>— | μs<br>μs | VREF = VDD = 5.0V<br>VREF = VDD = 2.5V |
| 135 | TSWC | Switching Time from convert → sample | | — | **(Note 3)** | | |

**Note 1:** ADRES register may be read on the following TCY cycle.

**2:** The time for the holding capacitor to acquire the "New" input voltage, when the new input value has not changed by more than 1 LSB from the last sampled voltage. The source impedance (*RS*) on the input channels is 50Ω. See Section 17.0 for more information on acquisition time consideration.

**3:** On the next Q4 cycle of the device clock.

**4:** The time of the A/D clock period is dependent on the device frequency and the TAD clock divider.


© 2006 Microchip Technology Inc.

## 23.0 DC AND AC CHARACTERISTICS GRAPHS AND TABLES

| | |
|---|---|
| **Note:** | The graphs and tables provided following this note are a statistical summary based on a limited number of samples and are provided for informational purposes only. The performance characteristics listed herein are not tested or guaranteed. In some graphs or tables, the data presented may be outside the specified operating range (e.g., outside specified power supply range) and therefore, outside the warranted range. |

"Typical" represents the mean of the distribution at 25°C. "Maximum" or "minimum" represents (mean + 3σ) or (mean - 3σ) respectively, where σ is a standard deviation, over the whole temperature range.

**FIGURE 23-1: TYPICAL IDD vs. FOSC OVER VDD (HS MODE)**

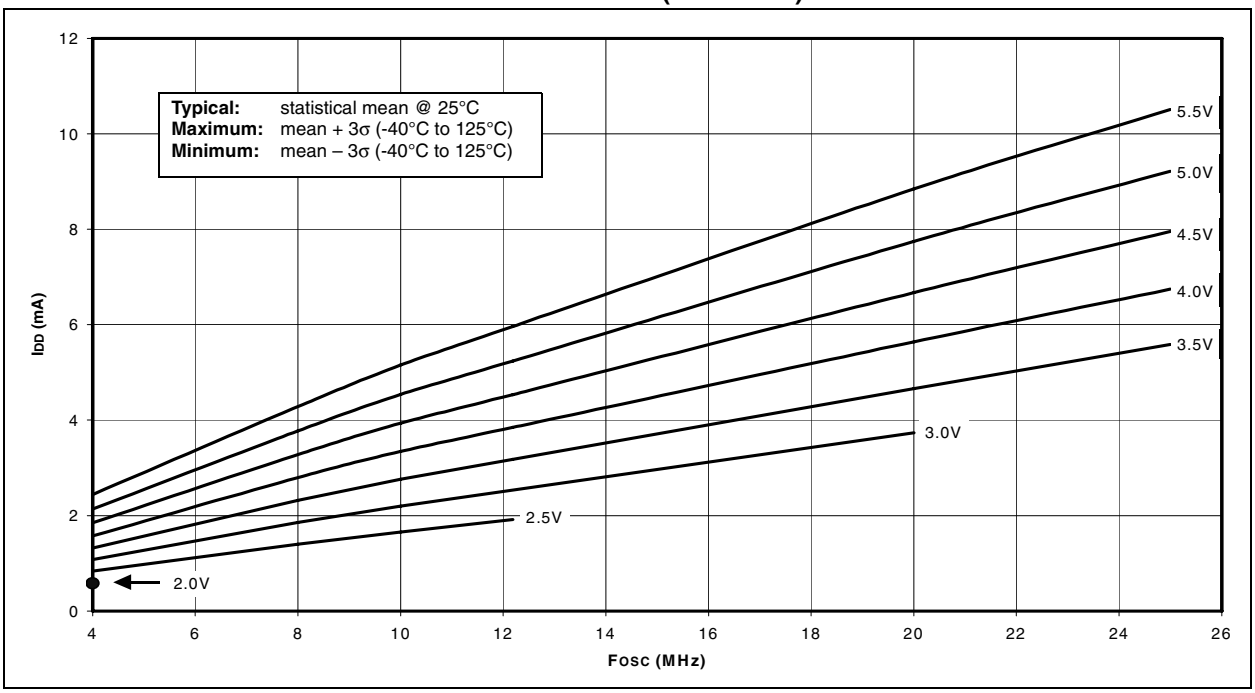


**FIGURE 23-2: MAXIMUM IDD vs. FOSC OVER VDD (HS MODE)**

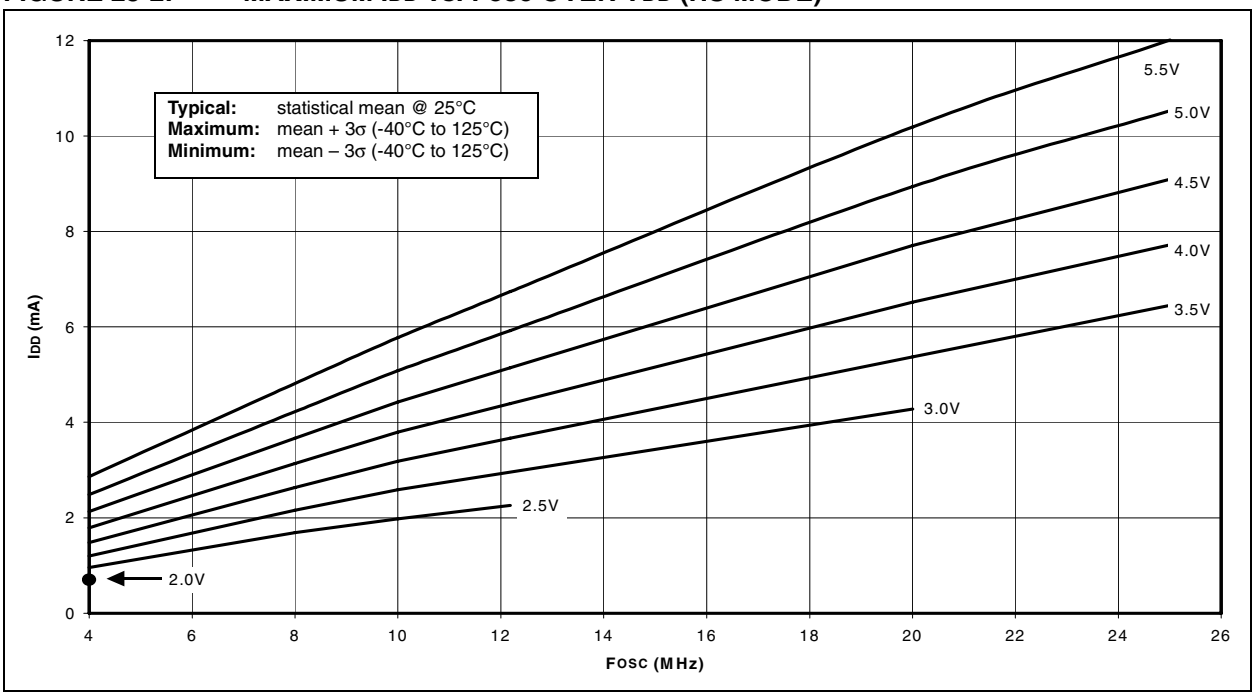

**FIGURE 23-3: TYPICAL IDD vs. FOSC OVER VDD (HS/PLL MODE)**

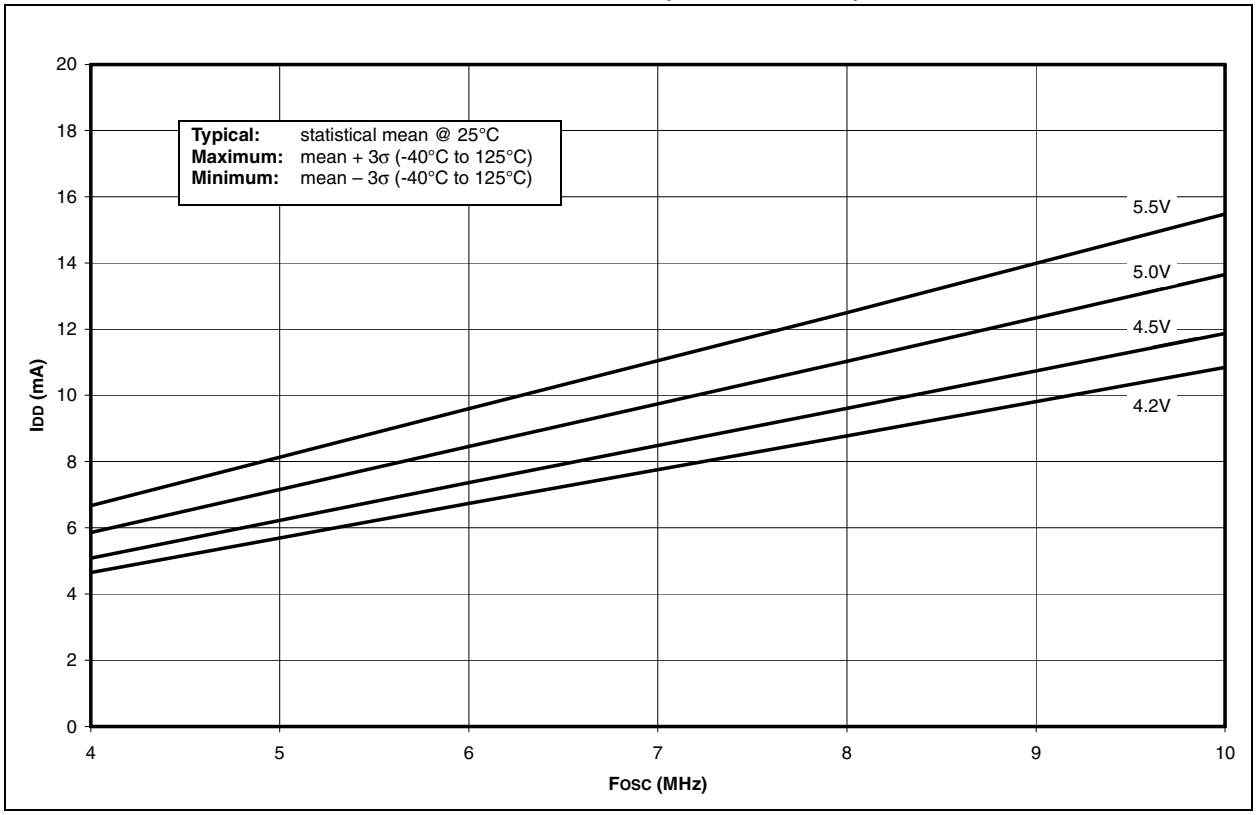


**FIGURE 23-4: MAXIMUM IDD vs. FOSC OVER VDD (HS/PLL MODE)**

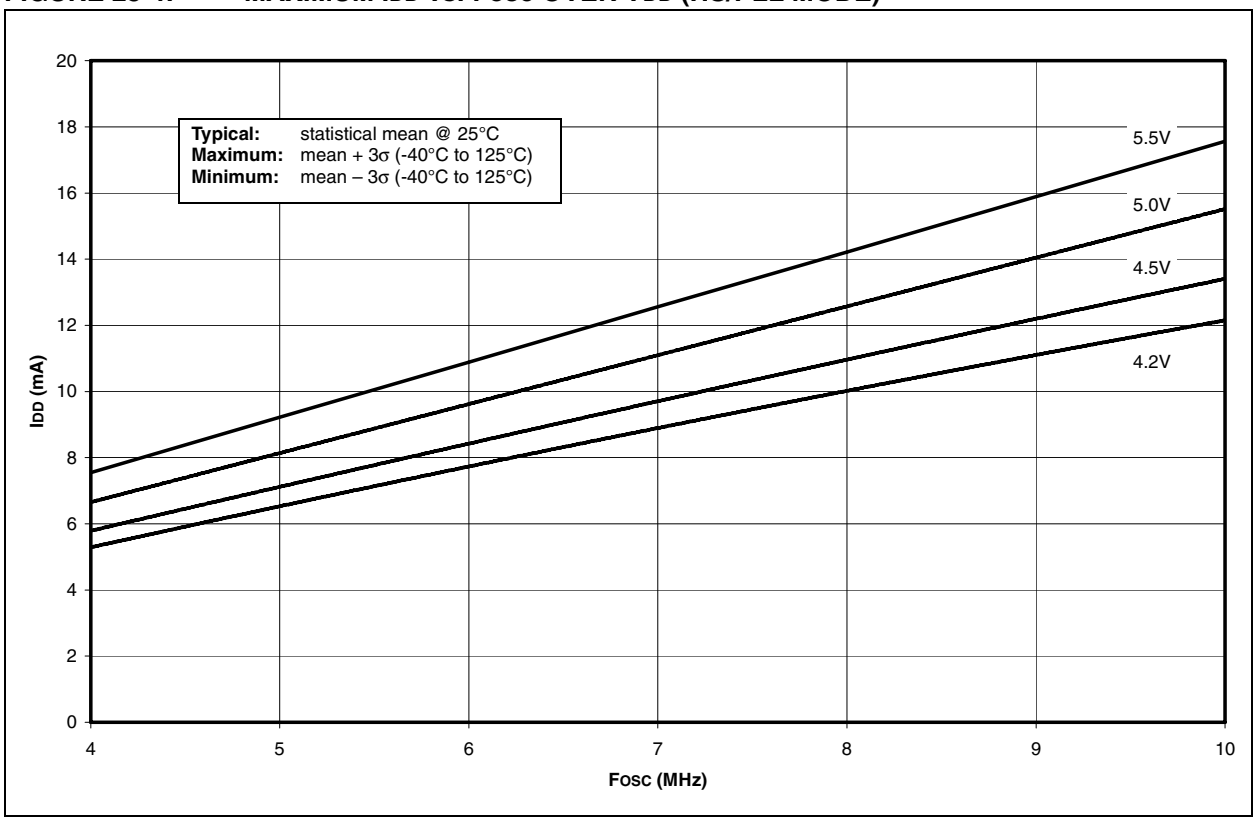



© 2006 Microchip Technology Inc.

**FIGURE 23-5: TYPICAL IDD vs. FOSC OVER VDD (XT MODE)**

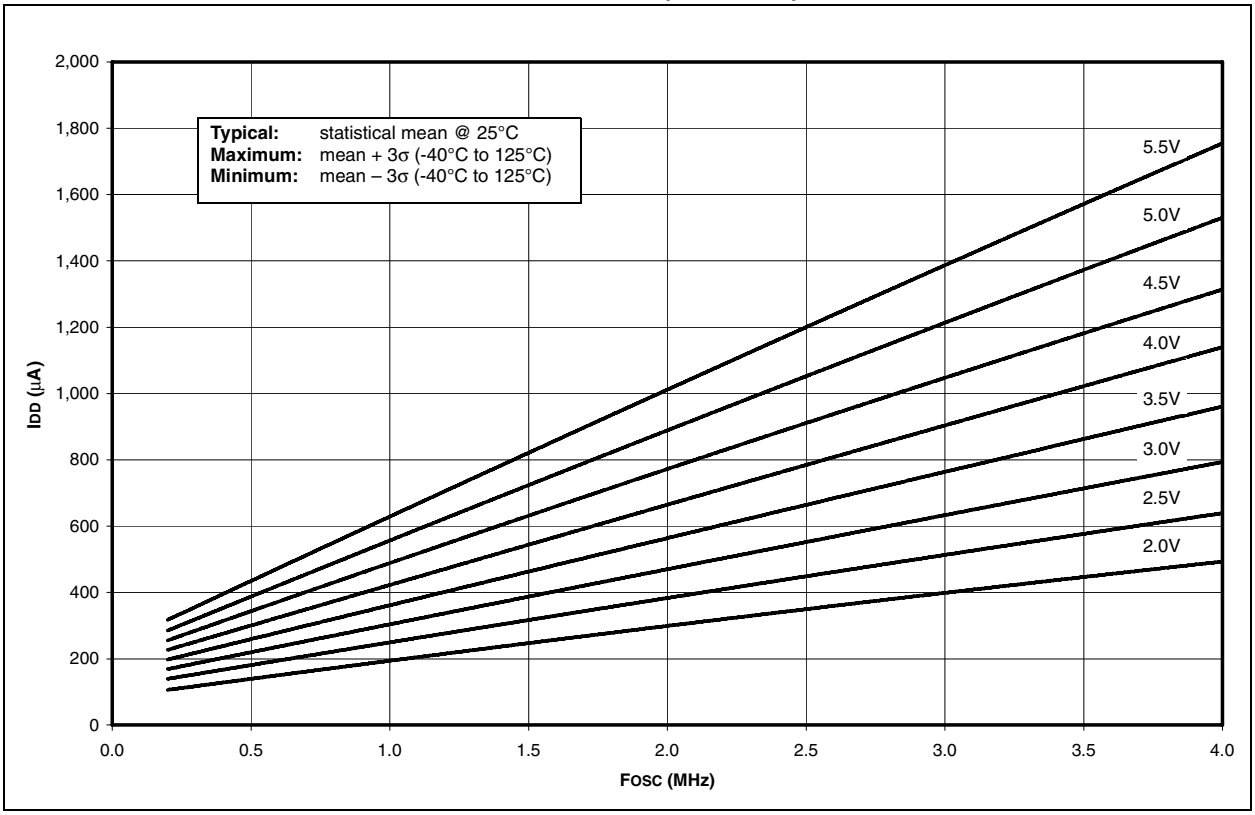


**FIGURE 23-6: MAXIMUM IDD vs. FOSC OVER VDD (XT MODE)**

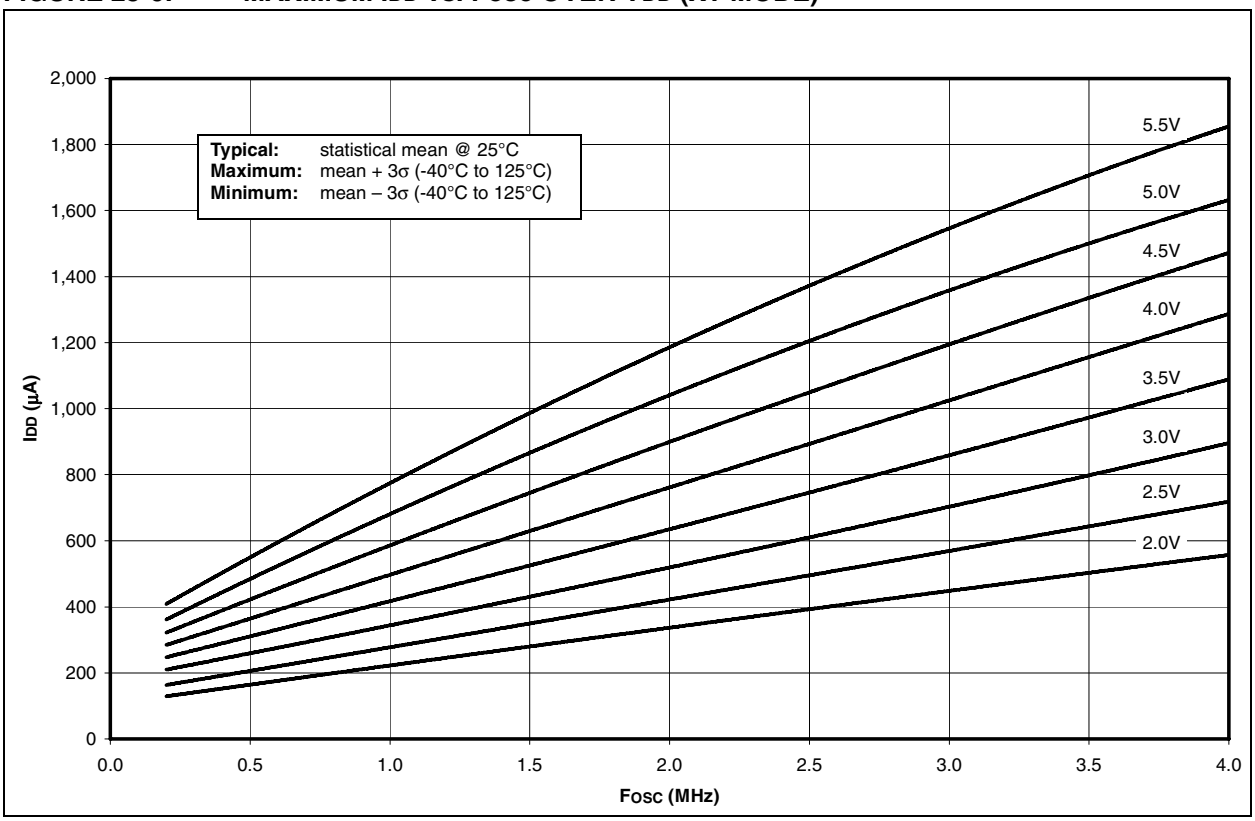

**FIGURE 23-7: TYPICAL IDD vs. FOSC OVER VDD (LP MODE)**

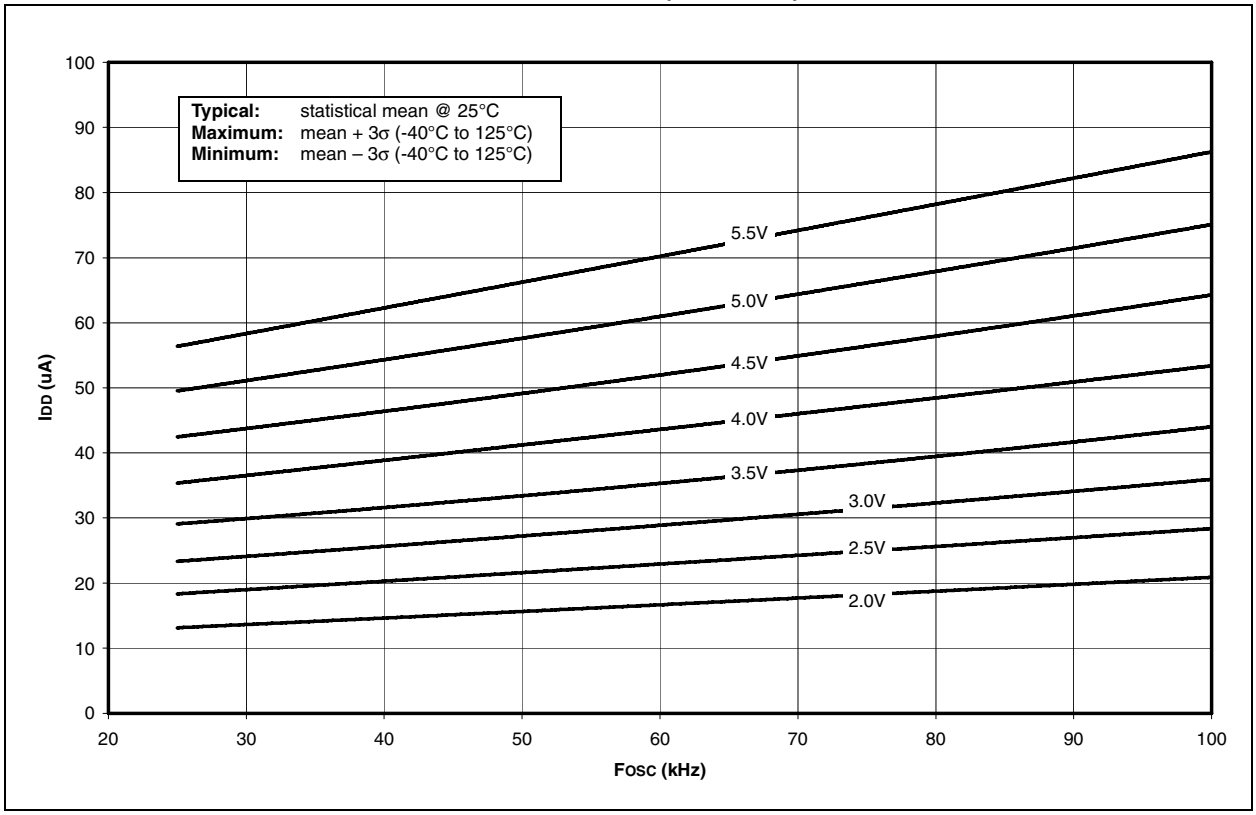


**FIGURE 23-8: MAXIMUM IDD vs. FOSC OVER VDD (LP MODE)**

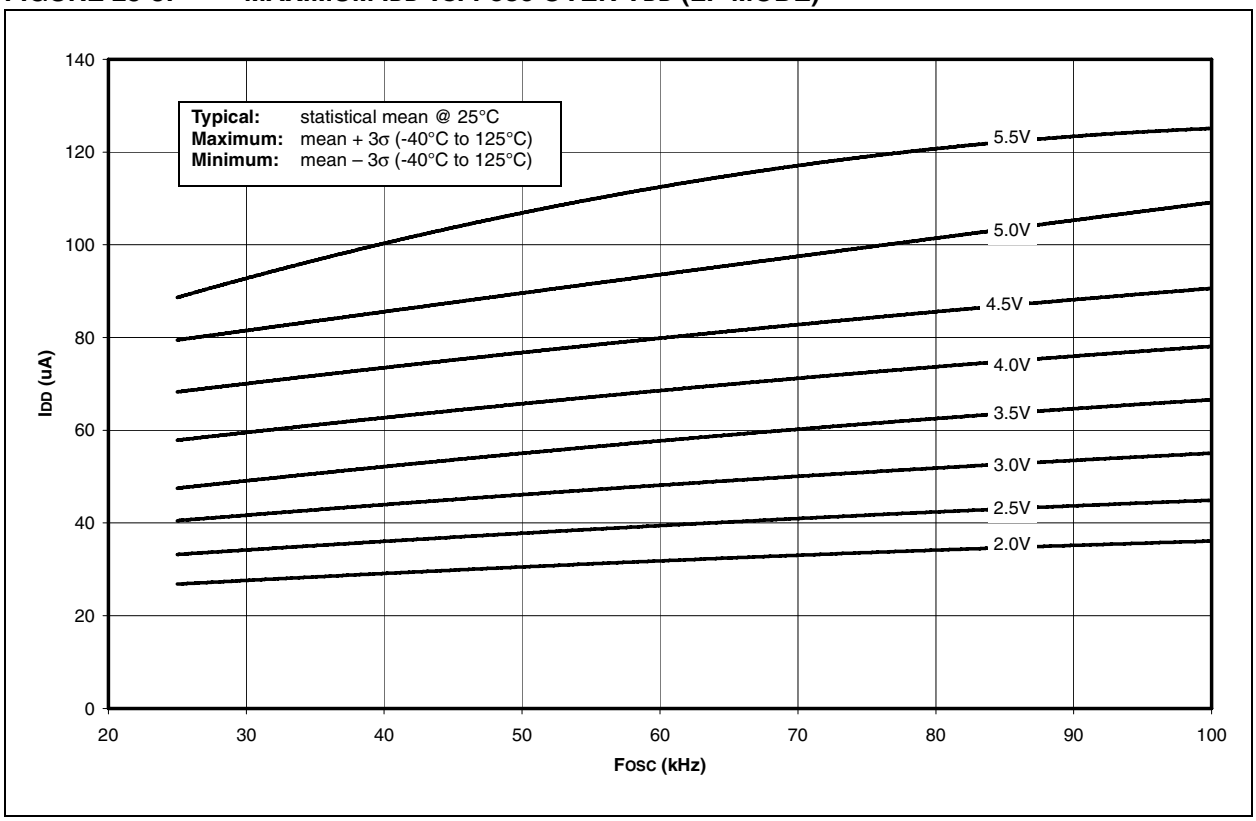



© 2006 Microchip Technology Inc.

**FIGURE 23-9: TYPICAL IDD vs. FOSC OVER VDD (EC MODE)**

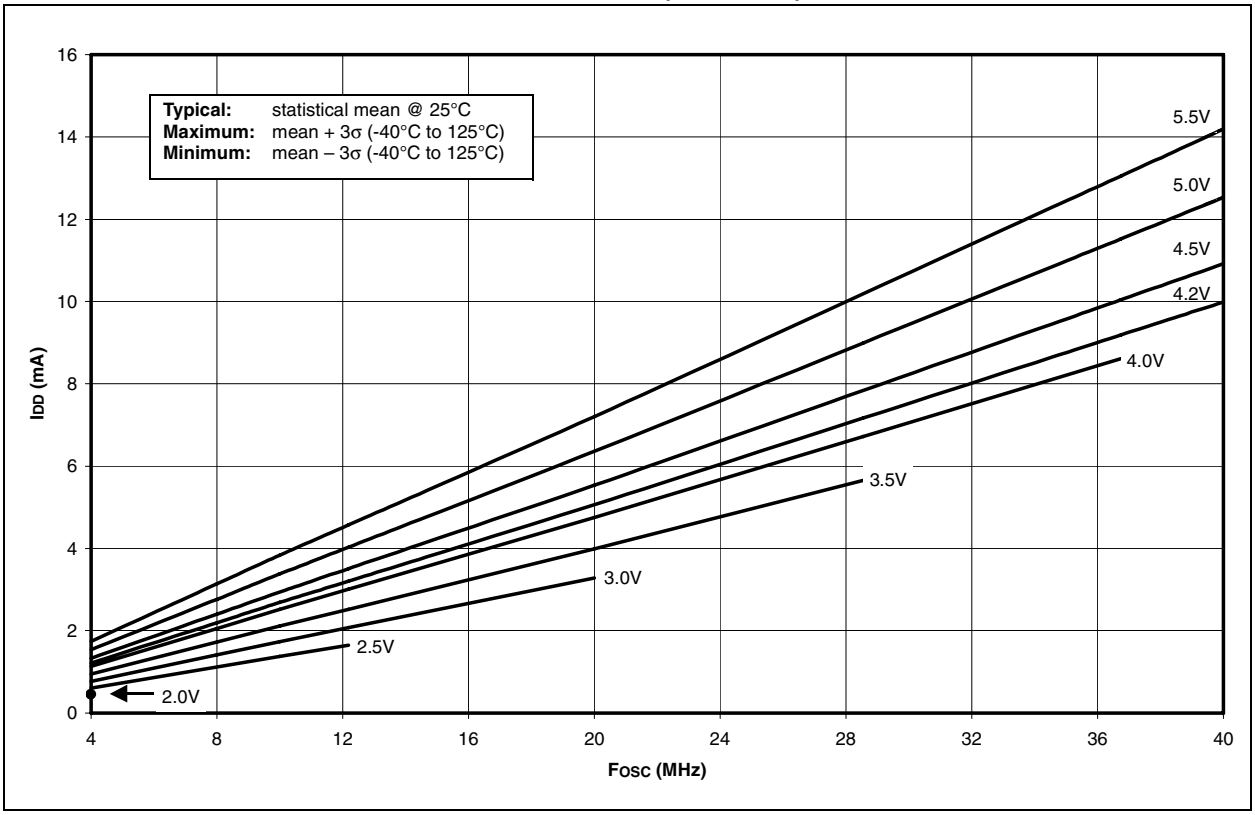


**FIGURE 23-10: MAXIMUM IDD vs. FOSC OVER VDD (EC MODE)**

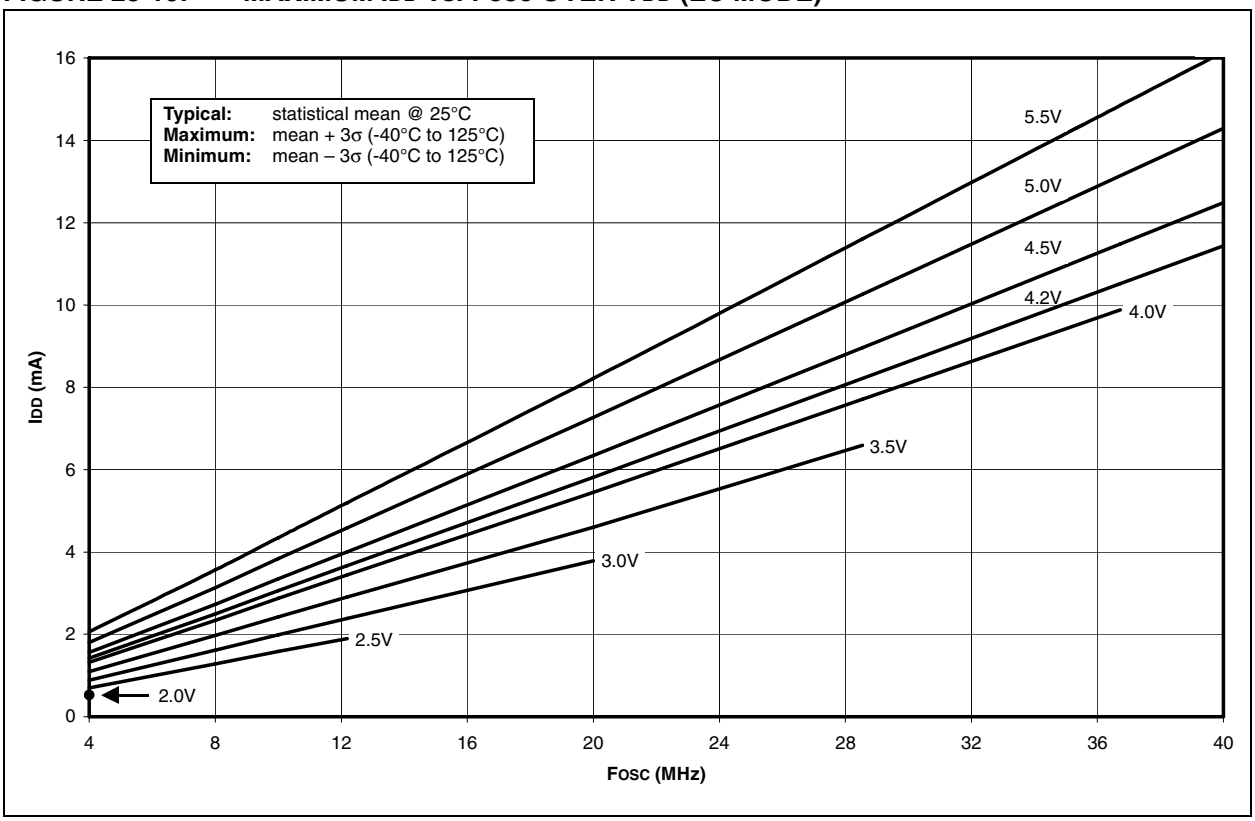

**FIGURE 23-11: TYPICAL AND MAXIMUM IDD vs. VDD (TIMER1 AS MAIN OSCILLATOR, 32.768 kHz, C1 AND C2 = 47 pF)**

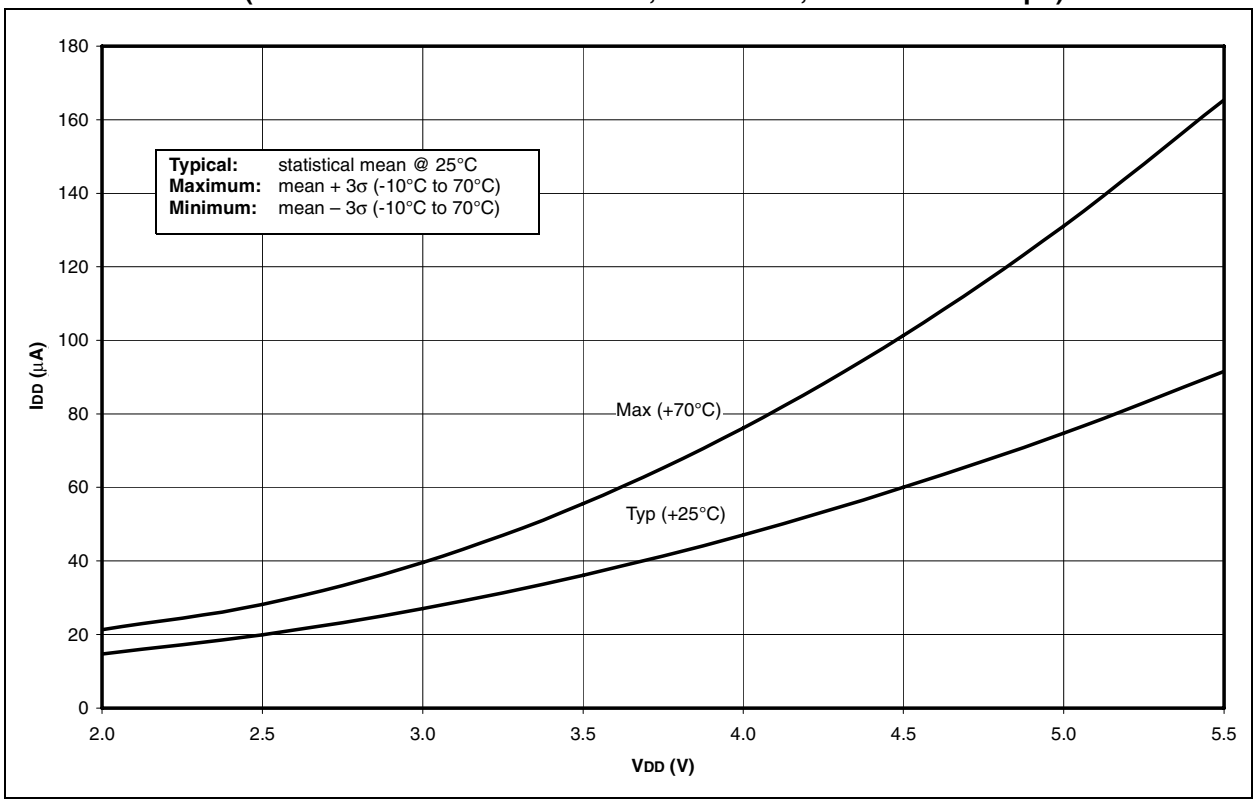


**FIGURE 23-12: AVERAGE FOSC vs. VDD FOR VARIOUS VALUES OF R (RC MODE, C = 20 pF, +25°C)**

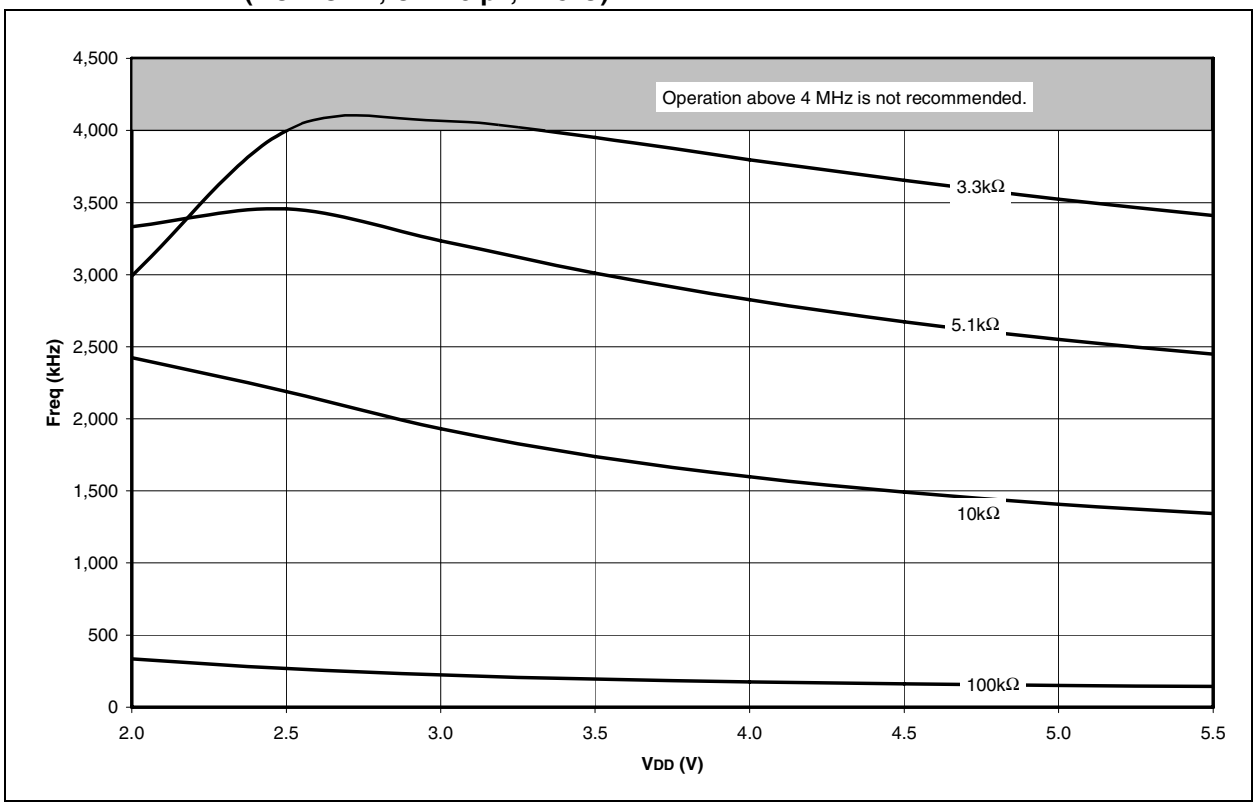



© 2006 Microchip Technology Inc.

**FIGURE 23-13: AVERAGE FOSC vs. VDD FOR VARIOUS VALUES OF R (RC MODE, C = 100 pF, +25°C)**

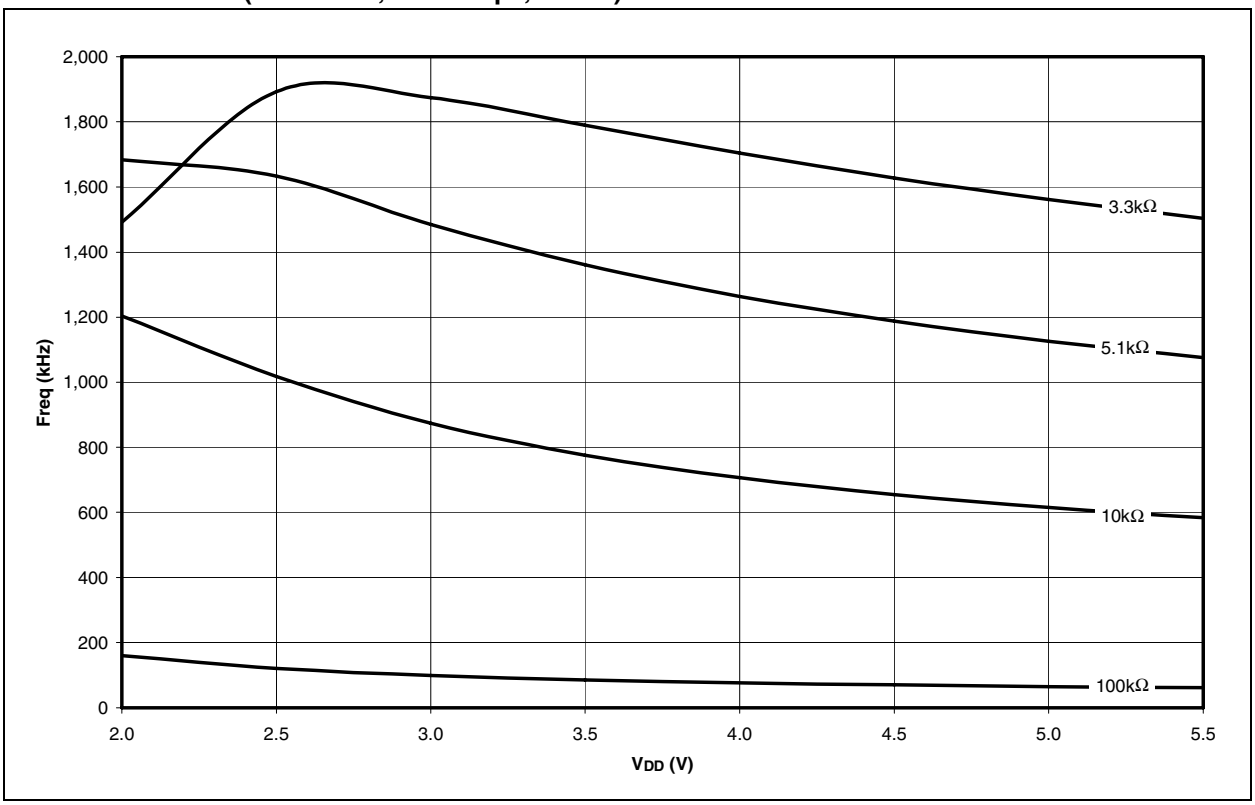


**FIGURE 23-14: AVERAGE FOSC vs. VDD FOR VARIOUS VALUES OF R (RC MODE, C = 300 pF, +25°C)**

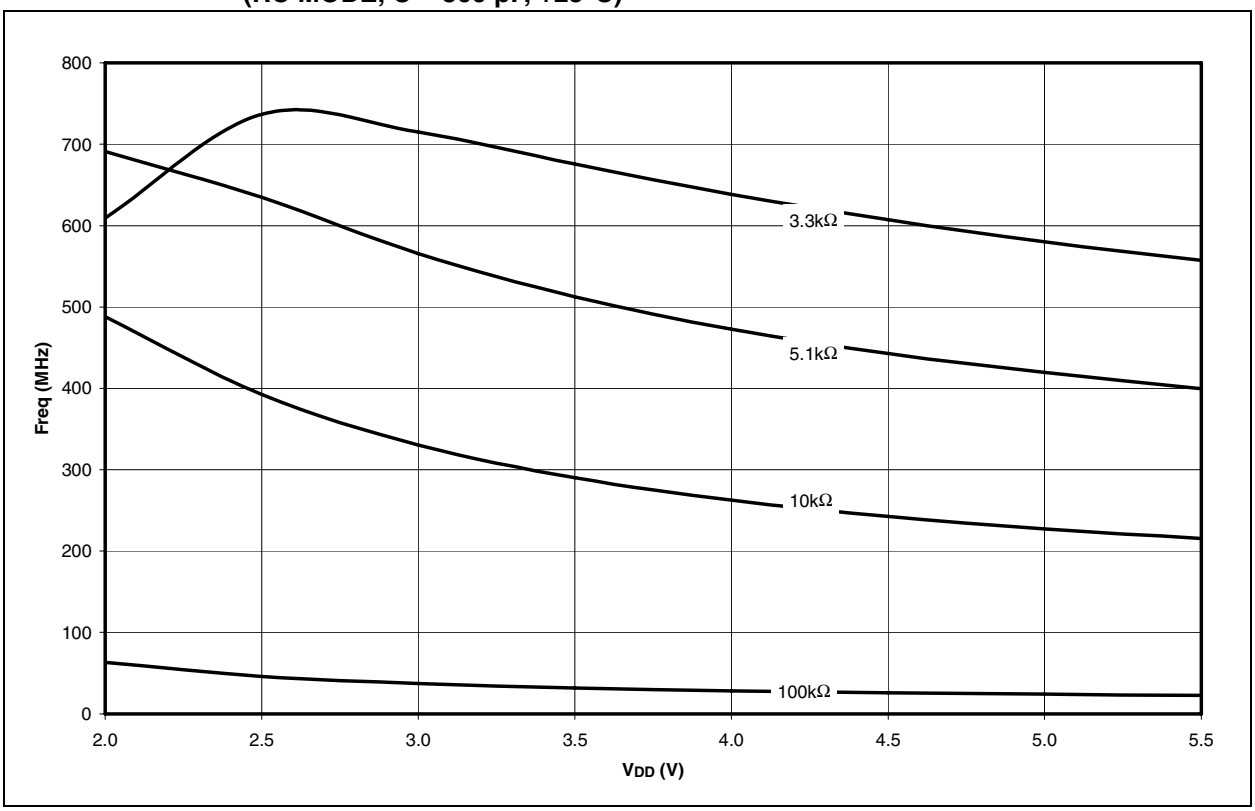

**FIGURE 23-15: IPD vs. VDD, -40°C TO +125°C (SLEEP MODE, ALL PERIPHERALS DISABLED)**

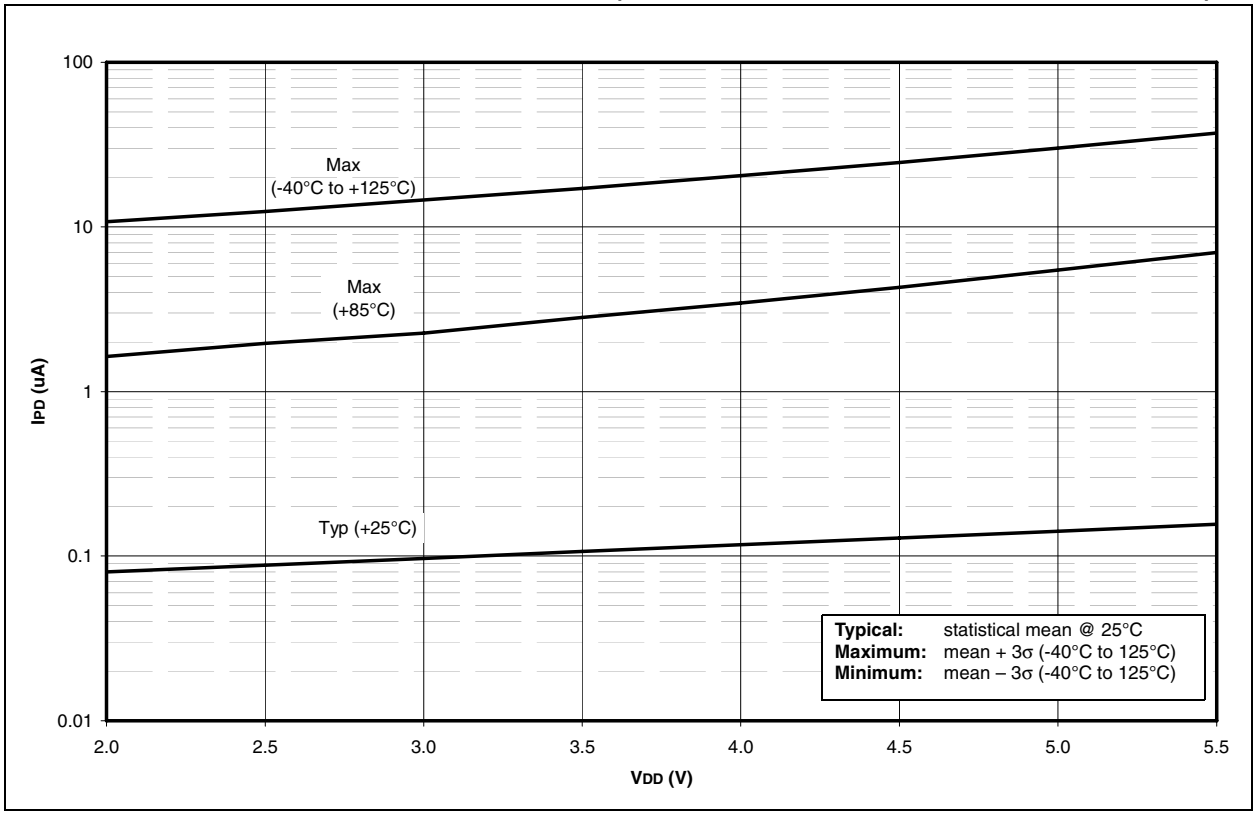


**FIGURE 23-16: ΔIBOR vs. VDD OVER TEMPERATURE (BOR ENABLED, VBOR = 2.00 - 2.16V)**

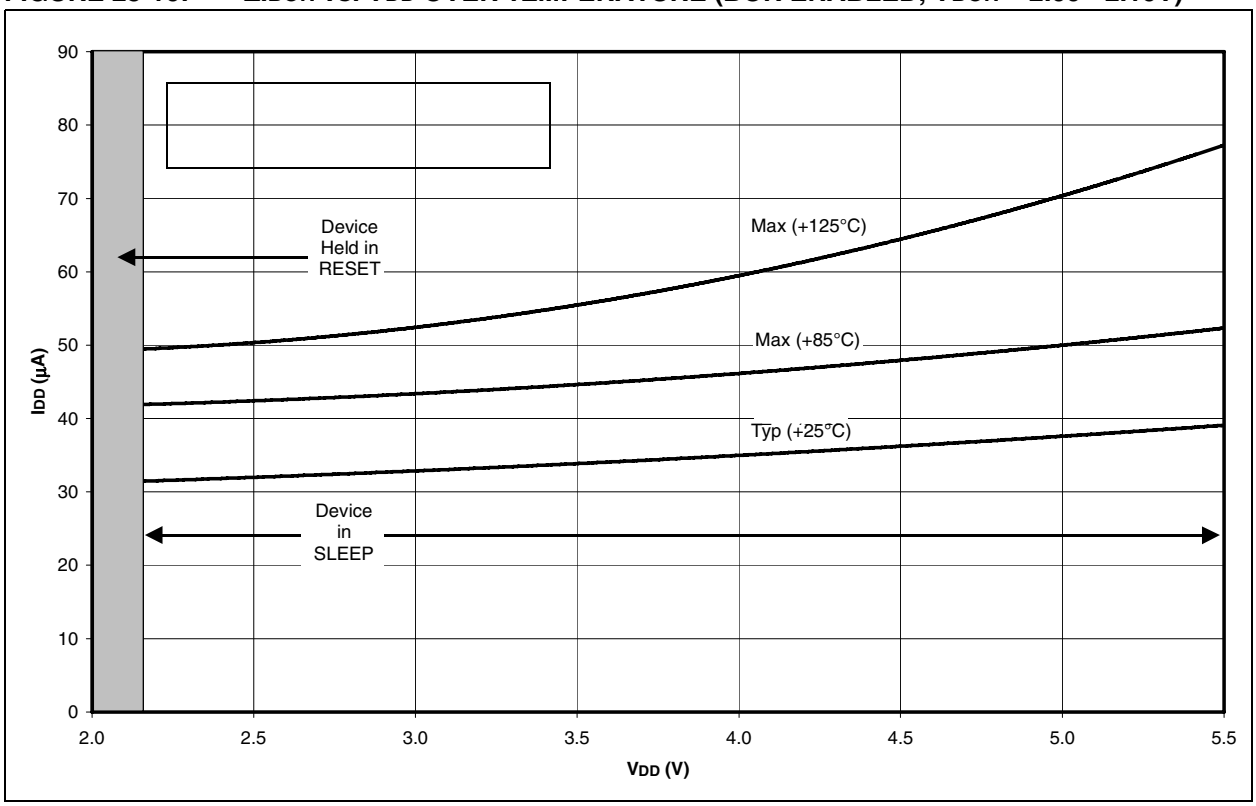



© 2006 Microchip Technology Inc.

**FIGURE 23-17: TYPICAL AND MAXIMUM ΔITMR1 vs. VDD OVER TEMPERATURE (-10°C TO +70°C, TIMER1 WITH OSCILLATOR, XTAL = 32 kHz, C1 AND C2 = 47 pF)**

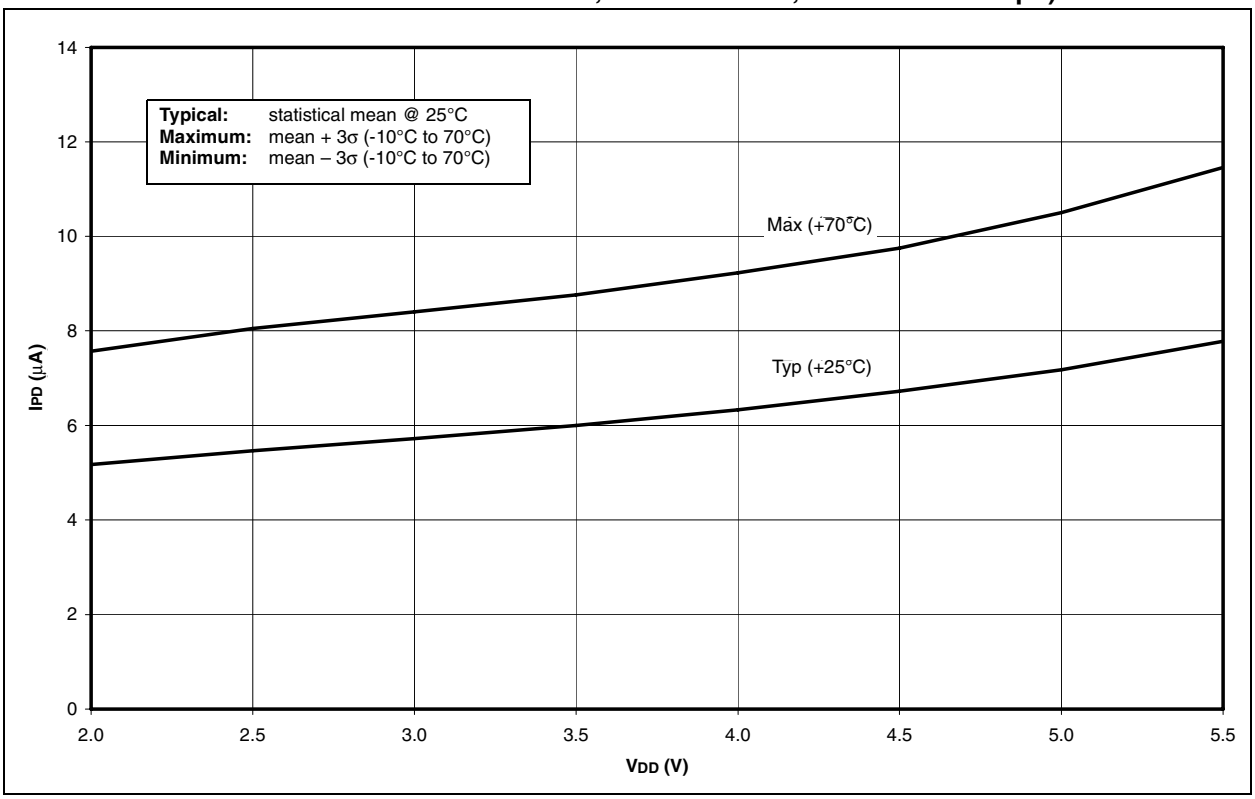


**FIGURE 23-18: TYPICAL AND MAXIMUM ΔIWDT vs. VDD OVER TEMPERATURE (WDT ENABLED)**

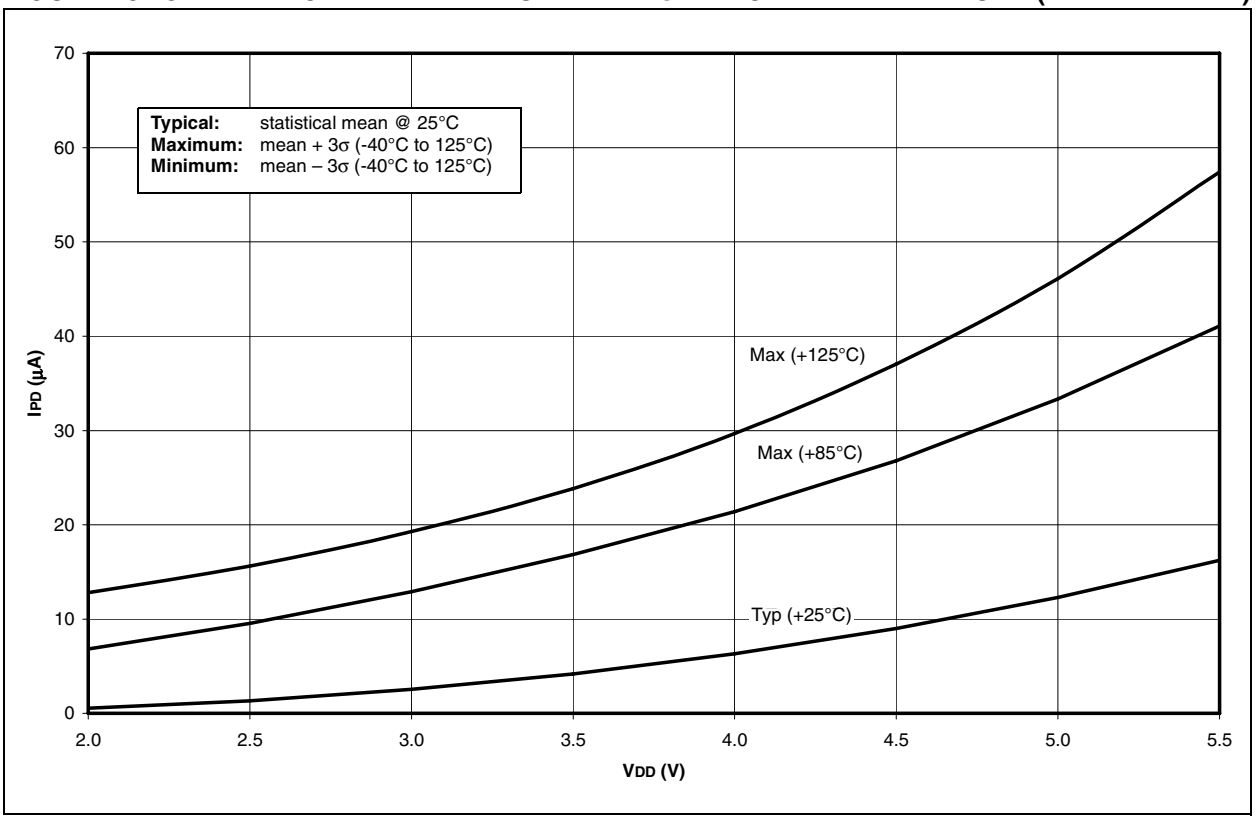

**FIGURE 23-19: TYPICAL, MINIMUM AND MAXIMUM WDT PERIOD vs. VDD (-40°C TO +125°C)**

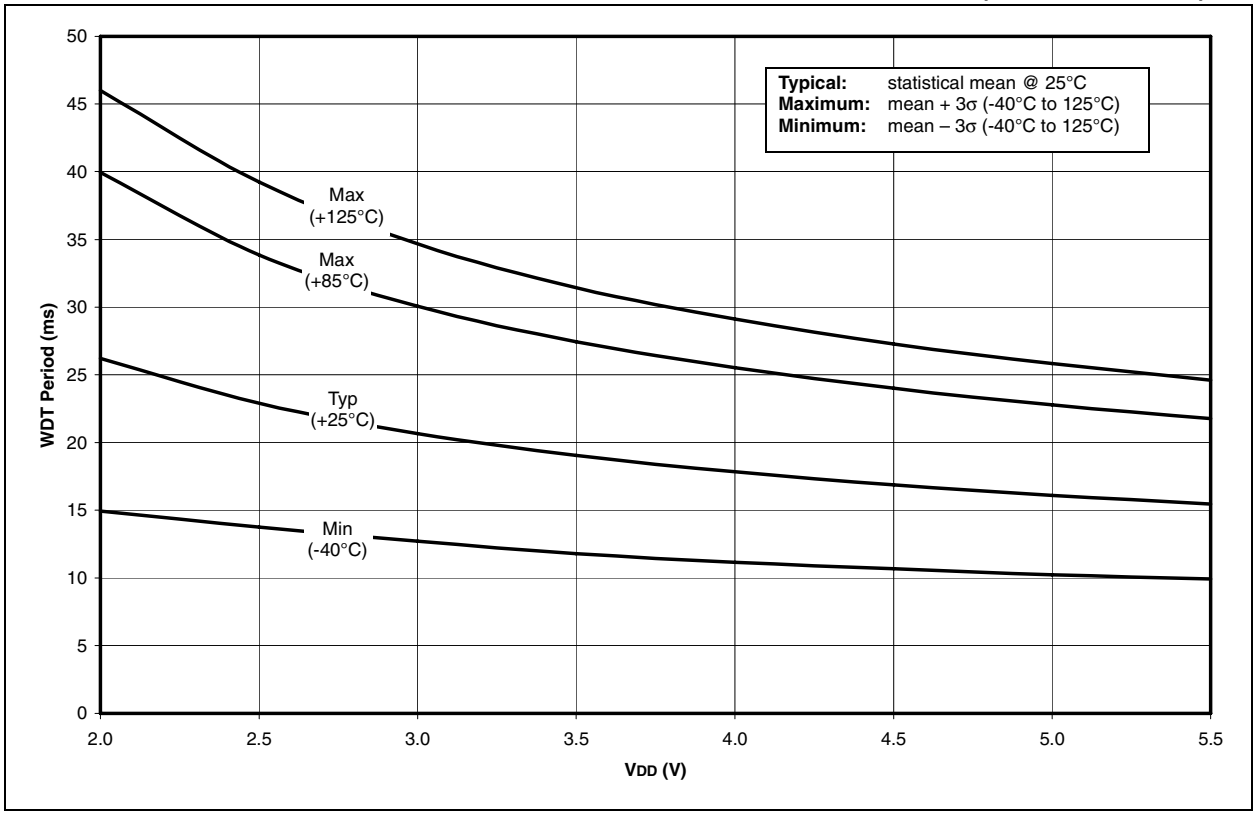


**FIGURE 23-20: ΔILVD vs. VDD OVER TEMPERATURE (LVD ENABLED, VLVD = 4.5 - 4.78V)**

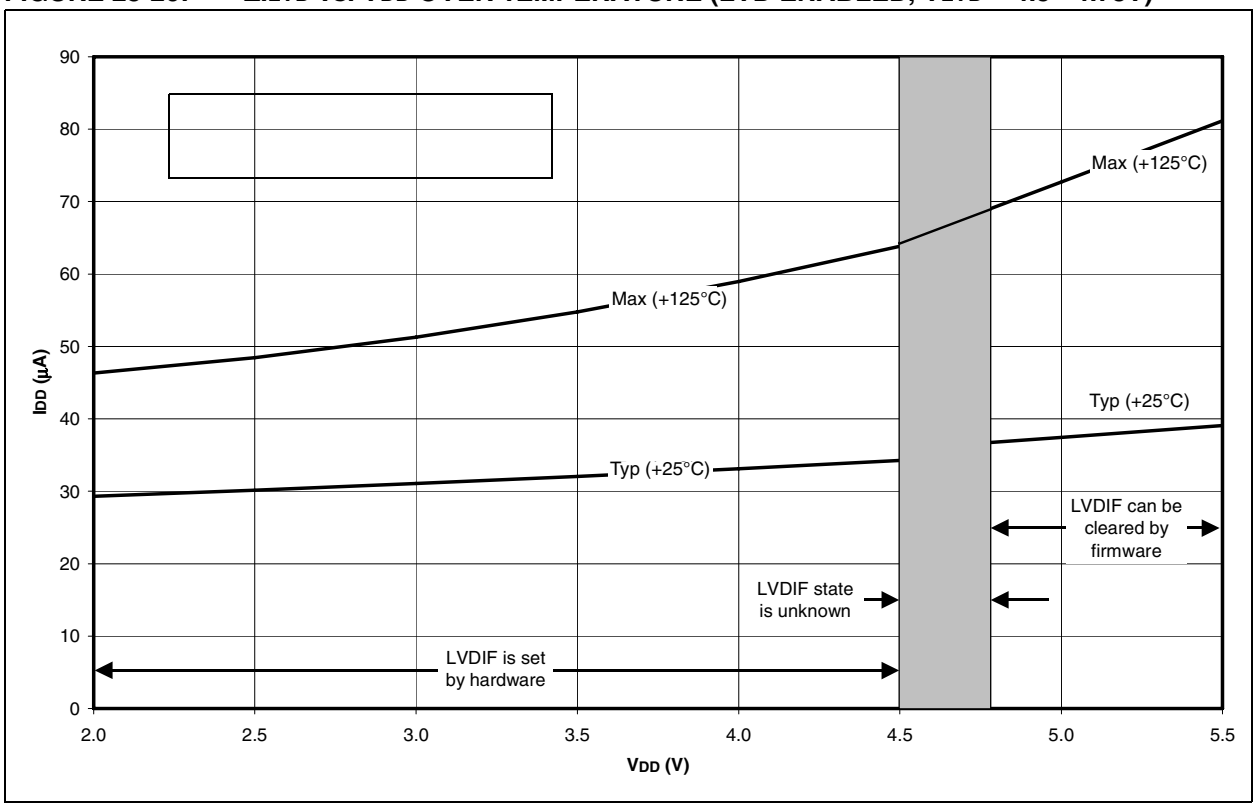



© 2006 Microchip Technology Inc.

**FIGURE 23-21: TYPICAL, MINIMUM AND MAXIMUM $V_{OH}$ vs. $I_{OH}$ ($V_{DD}$ = 5V, -40°C TO +125°C)**

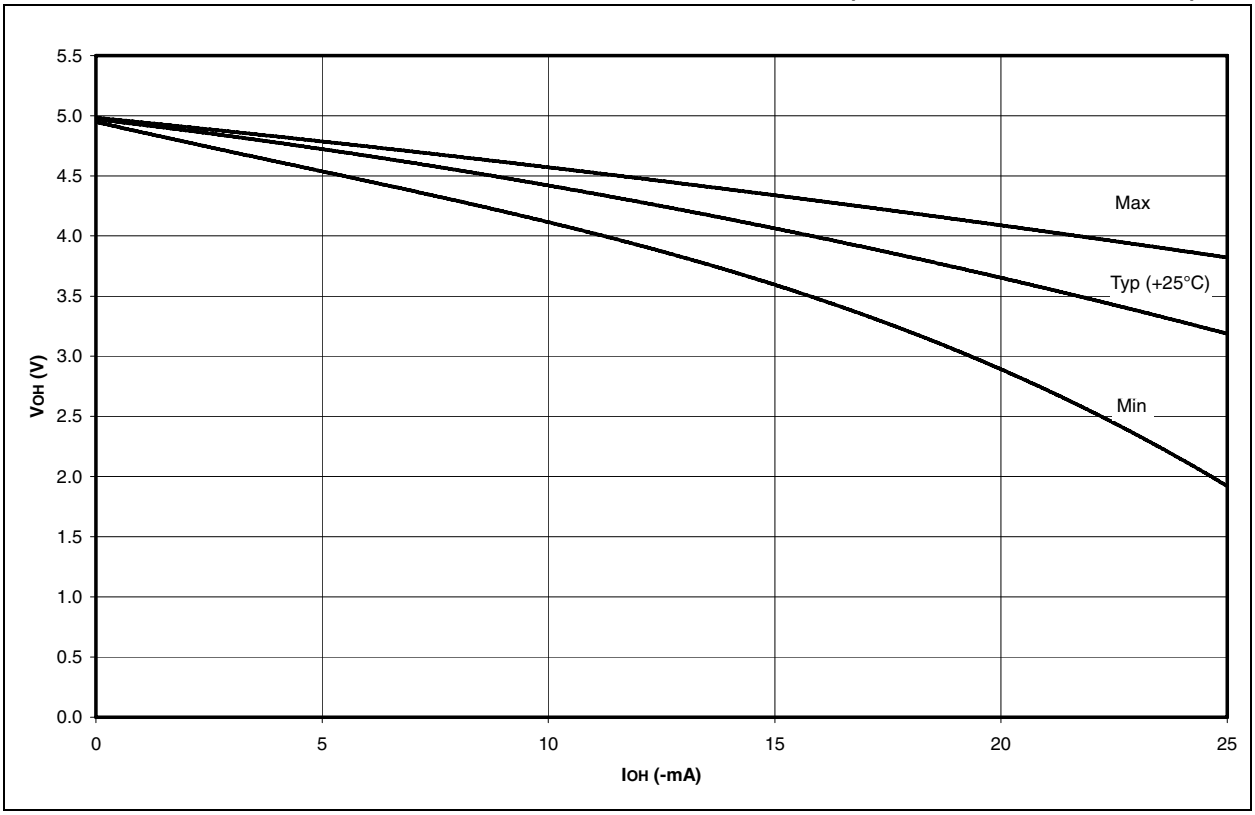


**FIGURE 23-22: TYPICAL, MINIMUM AND MAXIMUM $V_{OH}$ vs. $I_{OH}$ ($V_{DD}$ = 3V, -40°C TO +125°C)**

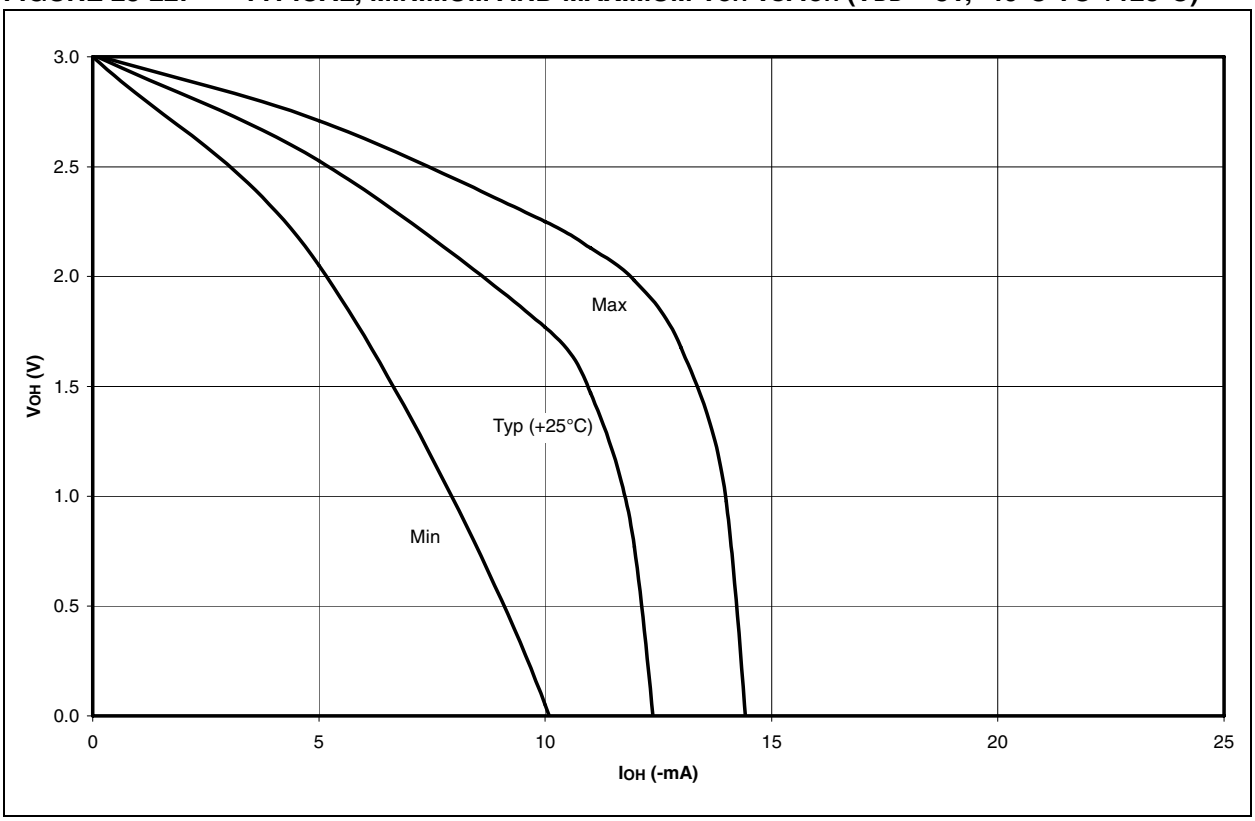

**FIGURE 23-23: TYPICAL AND MAXIMUM VOL vs. IOL (VDD = 5V, -40°C TO +125°C)**

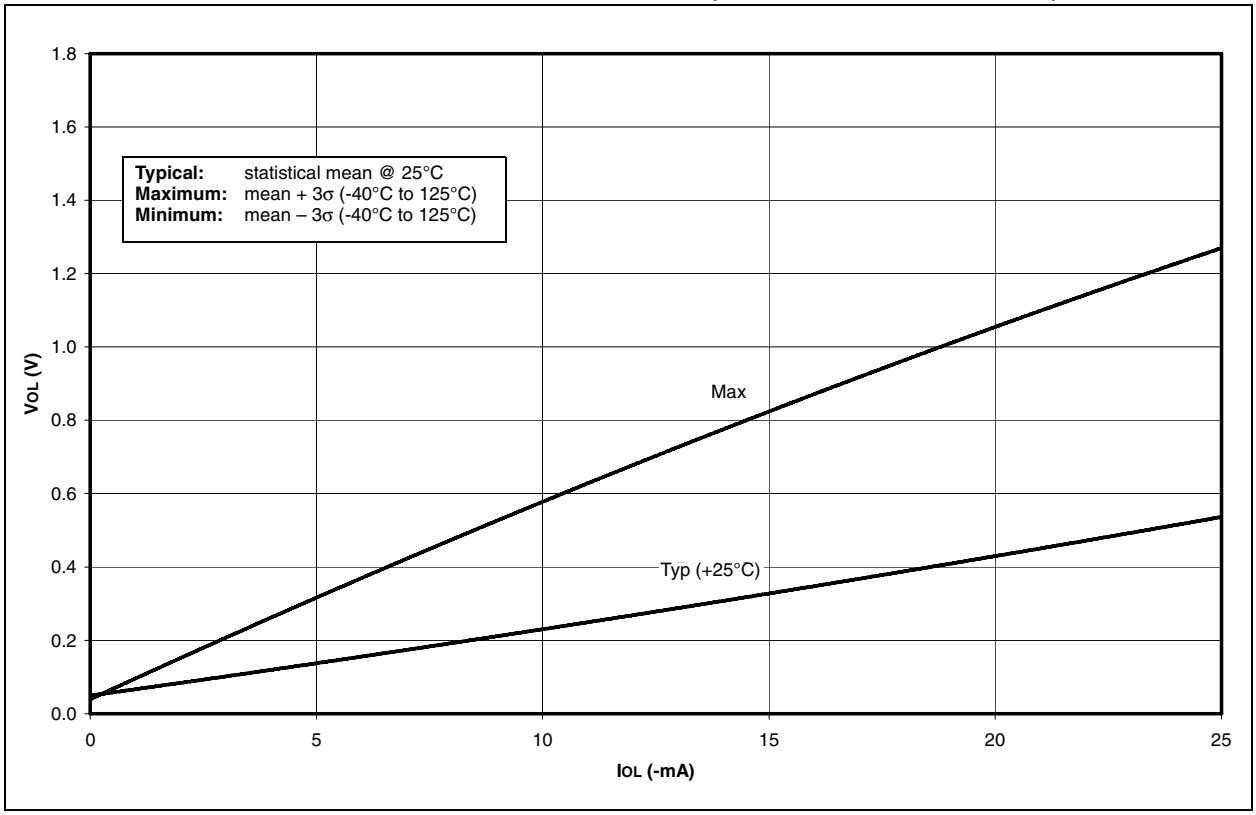


**FIGURE 23-24: TYPICAL AND MAXIMUM VOL vs. IOL (VDD = 3V, -40°C TO +125°C)**

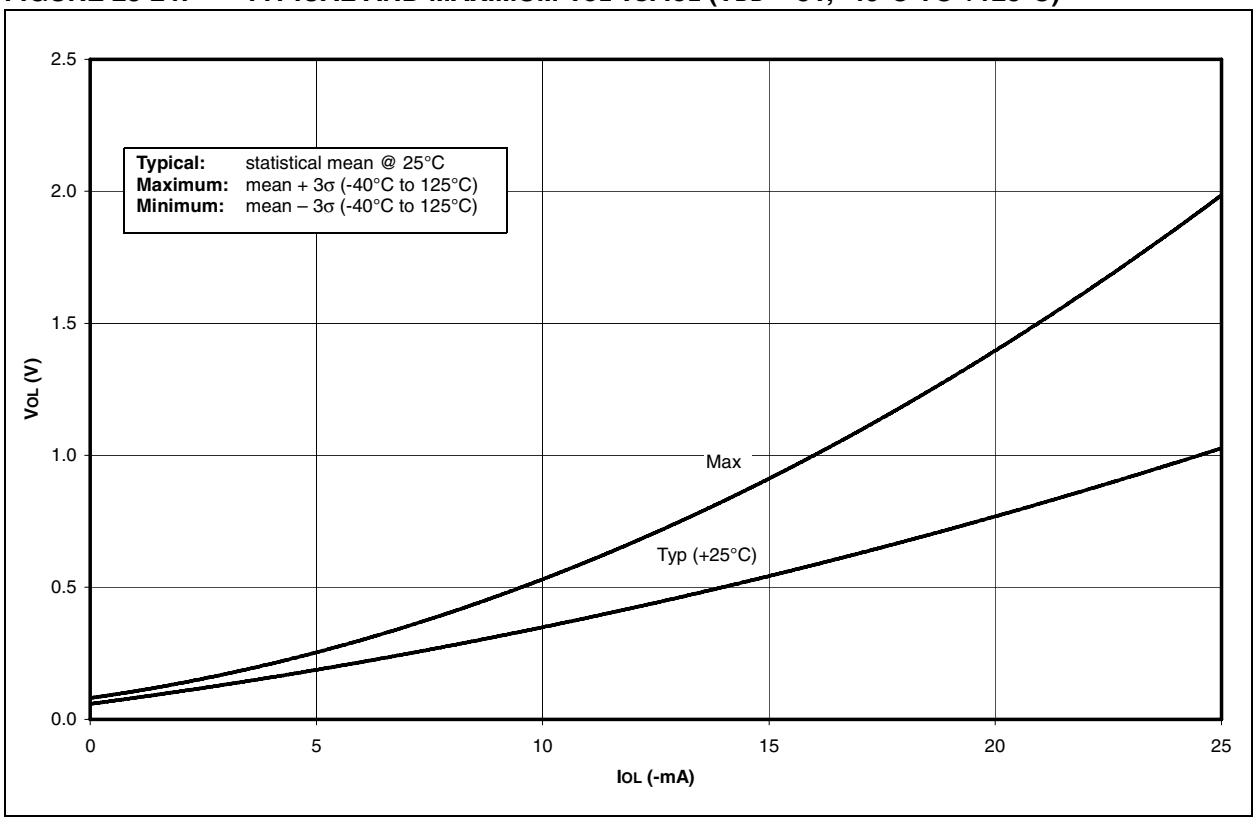



© 2006 Microchip Technology Inc.

**FIGURE 23-25: MINIMUM AND MAXIMUM VIN vs. VDD (ST INPUT, -40°C TO +125°C)**

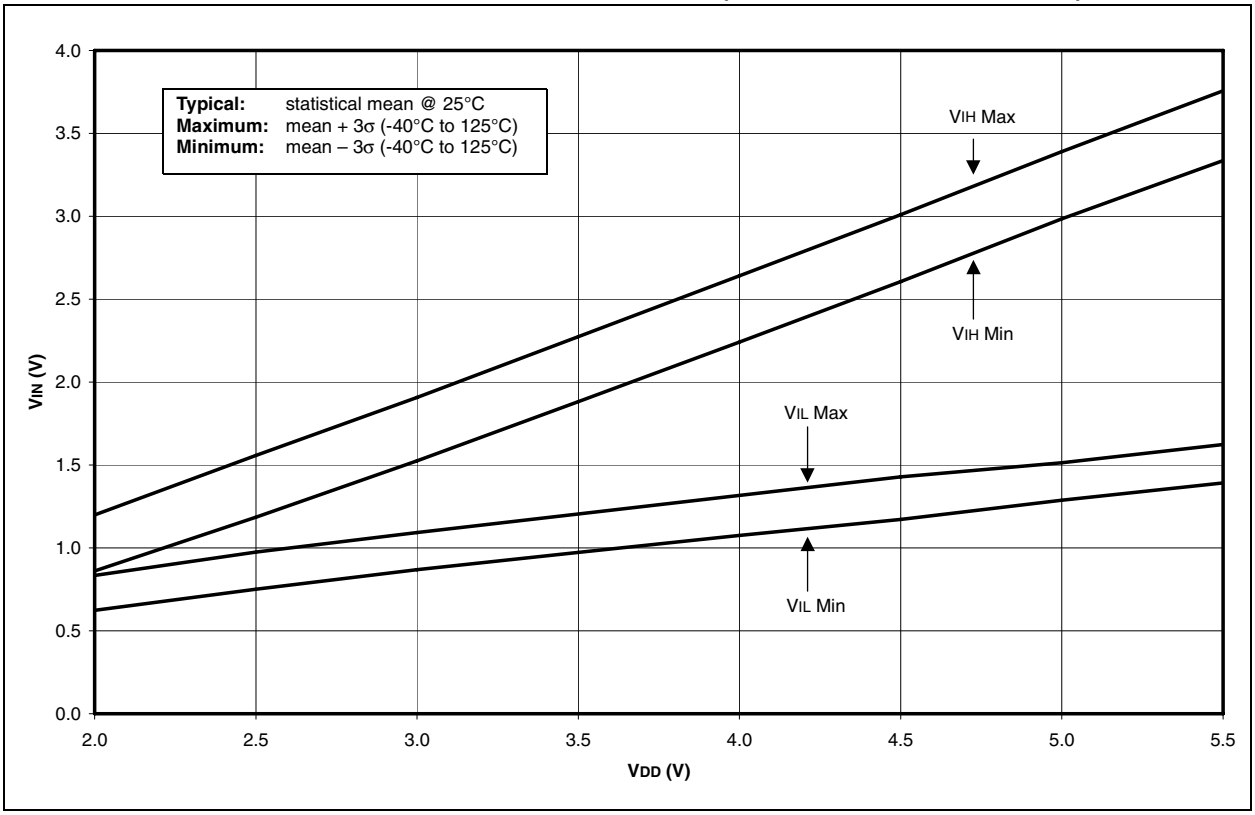


**FIGURE 23-26: MINIMUM AND MAXIMUM VIN vs. VDD (TTL INPUT, -40°C TO +125°C)**

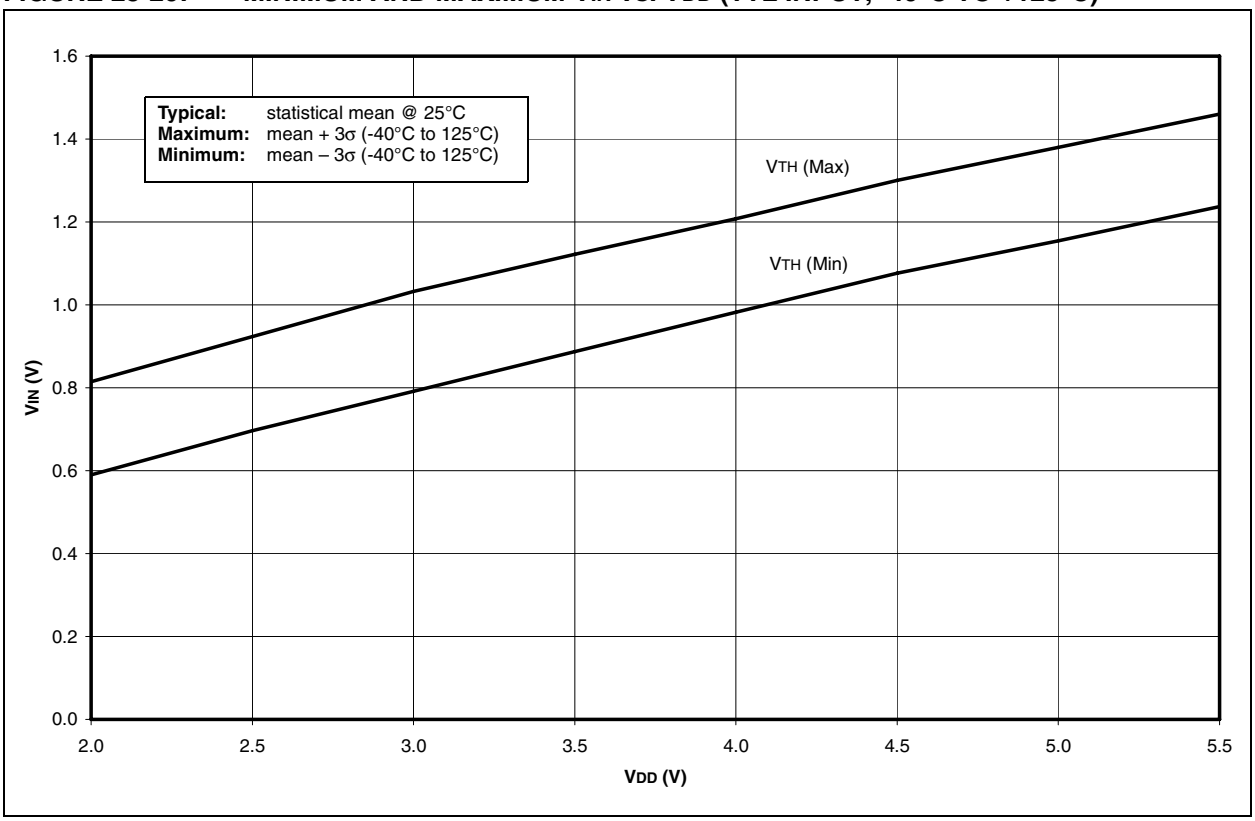

**FIGURE 23-27: MINIMUM AND MAXIMUM VIN vs. VDD (I2C INPUT, -40°C TO +125°C)**

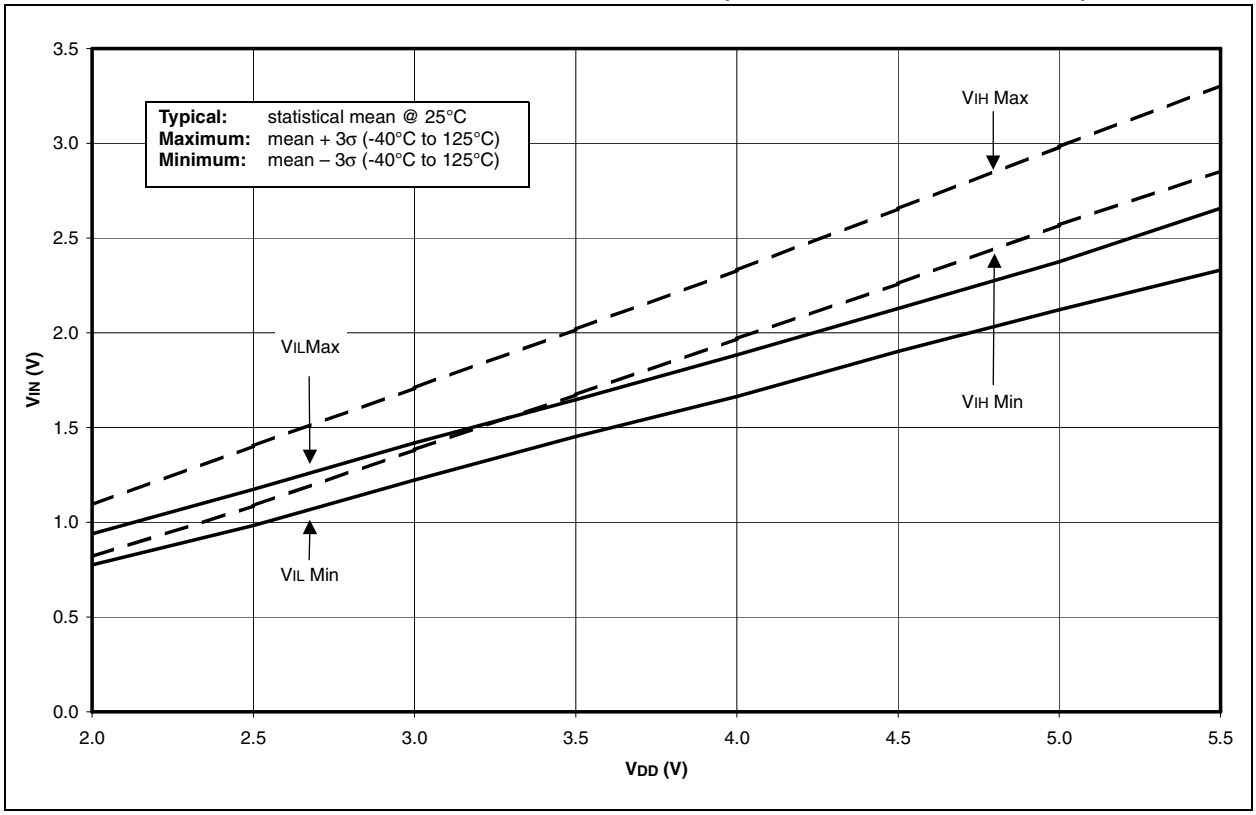


**FIGURE 23-28: A/D NON-LINEARITY vs. VREFH (VDD = VREFH, -40°C TO +125°C)**

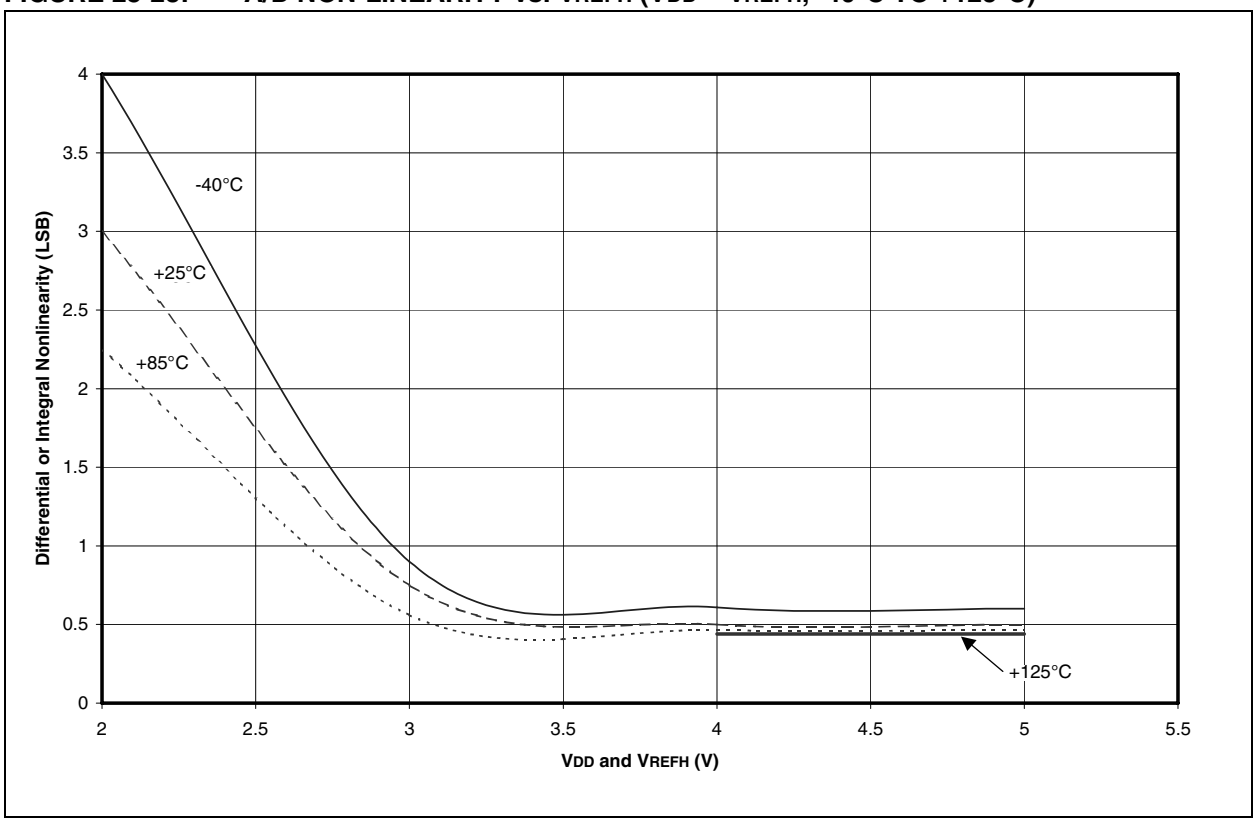



© 2006 Microchip Technology Inc.

**FIGURE 23-29: A/D NON-LINEARITY vs. VREFH (VDD = 5V, -40°C TO +125°C)**

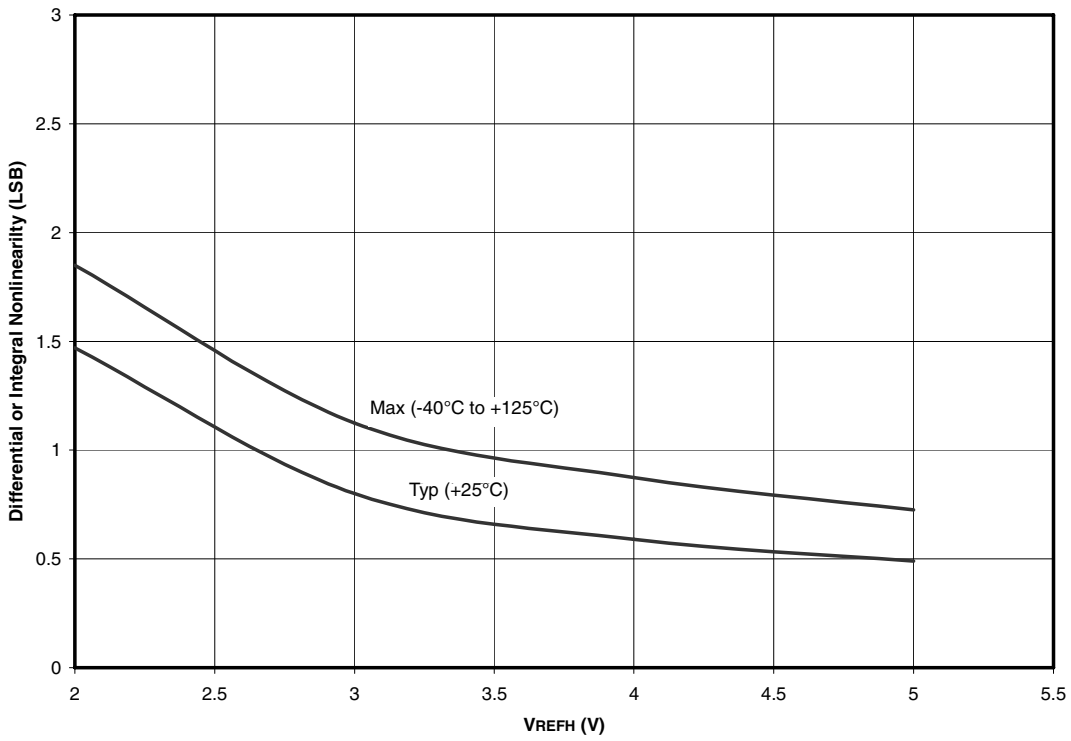

**NOTES:**


© 2006 Microchip Technology Inc.

# 24.0 PACKAGING INFORMATION

## 24.1 Package Marking Information

28-Lead SPDIP

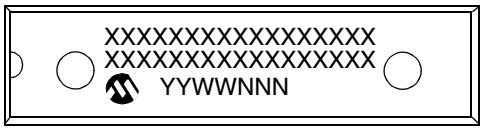


Example

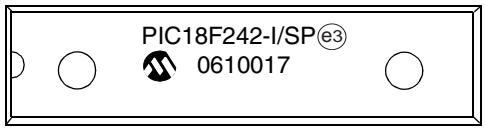


28-Lead SOIC

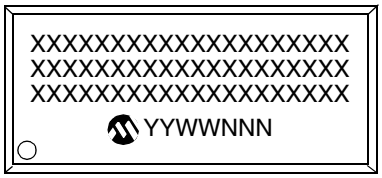


Example

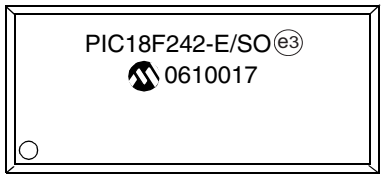


40-Lead PDIP

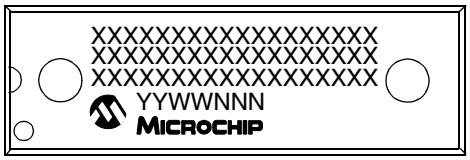


Example

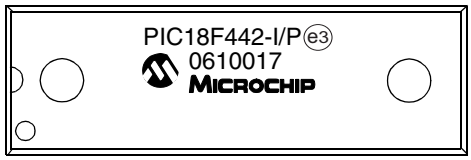


| | | |
|---|---|---|
| **Legend:** | XX...X | Customer-specific information |
| | Y | Year code (last digit of calendar year) |
| | YY | Year code (last 2 digits of calendar year) |
| | WW | Week code (week of January 1 is week ‘01’) |
| | NNN | Alphanumeric traceability code |
| | e3 | Pb-free JEDEC designator for Matte Tin (Sn) |
| | * | This package is Pb-free. The Pb-free JEDEC designator (e3) can be found on the outer packaging for this package. |

**Note**: In the event the full Microchip part number cannot be marked on one line, it will be carried over to the next line, thus limiting the number of available characters for customer-specific information.

## Package Marking Information (Cont'd)

44-Lead TQFP

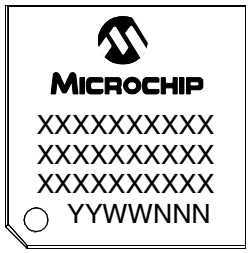


Example

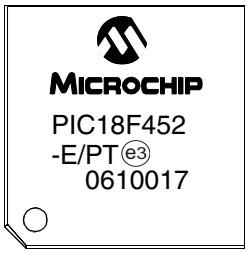


44-Lead PLCC

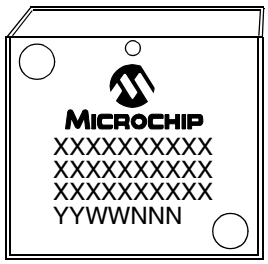


Example

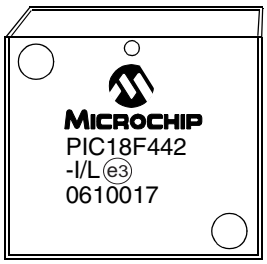



© 2006 Microchip Technology Inc.

## 24.2 Package Details

The following sections give the technical details of the packages.

### 28-Lead Skinny Plastic Dual In-line (SP) – 300 mil Body (PDIP)

**Note:** For the most current package drawings, please see the Microchip Packaging Specification located at http://www.microchip.com/packaging

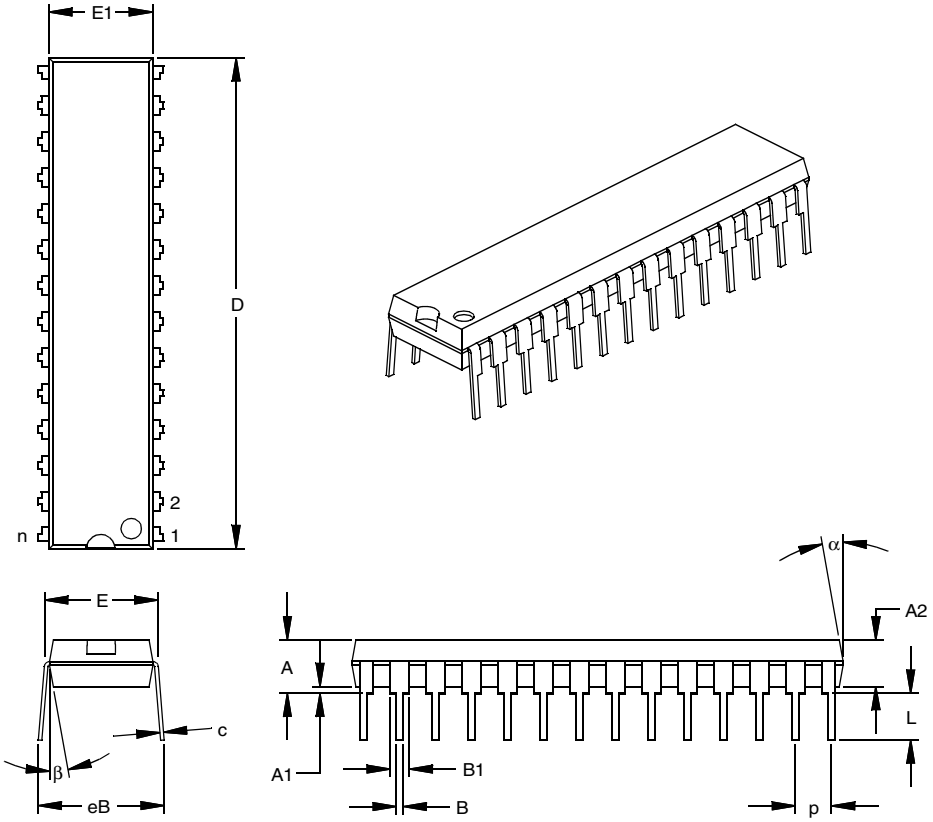


| Units | | INCHES* | | | MILLIMETERS | | |
|---|---|---|---|---|---|---|---|
| Dimension Limits | | MIN | NOM | MAX | MIN | NOM | MAX |
| Number of Pins | n | | 28 | | | 28 | |
| Pitch | p | | .100 | | | 2.54 | |
| Top to Seating Plane | A | .140 | .150 | .160 | 3.56 | 3.81 | 4.06 |
| Molded Package Thickness | A2 | .125 | .130 | .135 | 3.18 | 3.30 | 3.43 |
| Base to Seating Plane | A1 | .015 | | | 0.38 | | |
| Shoulder to Shoulder Width | E | .300 | .310 | .325 | 7.62 | 7.87 | 8.26 |
| Molded Package Width | E1 | .275 | .285 | .295 | 6.99 | 7.24 | 7.49 |
| Overall Length | D | 1.345 | 1.365 | 1.385 | 34.16 | 34.67 | 35.18 |
| Tip to Seating Plane | L | .125 | .130 | .135 | 3.18 | 3.30 | 3.43 |
| Lead Thickness | c | .008 | .012 | .015 | 0.20 | 0.29 | 0.38 |
| Upper Lead Width | B1 | .040 | .053 | .065 | 1.02 | 1.33 | 1.65 |
| Lower Lead Width | B | .016 | .019 | .022 | 0.41 | 0.48 | 0.56 |
| Overall Row Spacing § | eB | .320 | .350 | .430 | 8.13 | 8.89 | 10.92 |
| Mold Draft Angle Top | α | 5 | 10 | 15 | 5 | 10 | 15 |
| Mold Draft Angle Bottom | β | 5 | 10 | 15 | 5 | 10 | 15 |

* Controlling Parameter
§ Significant Characteristic
**Notes:**
Dimension D and E1 do not include mold flash or protrusions. Mold flash or protrusions shall not exceed .010” (0.254mm) per side.
JEDEC Equivalent: MO-095
Drawing No. C04-070

## 28-Lead Plastic Small Outline (SO) – Wide, 300 mil Body (SOIC)

**Note:** For the most current package drawings, please see the Microchip Packaging Specification located at http://www.microchip.com/packaging

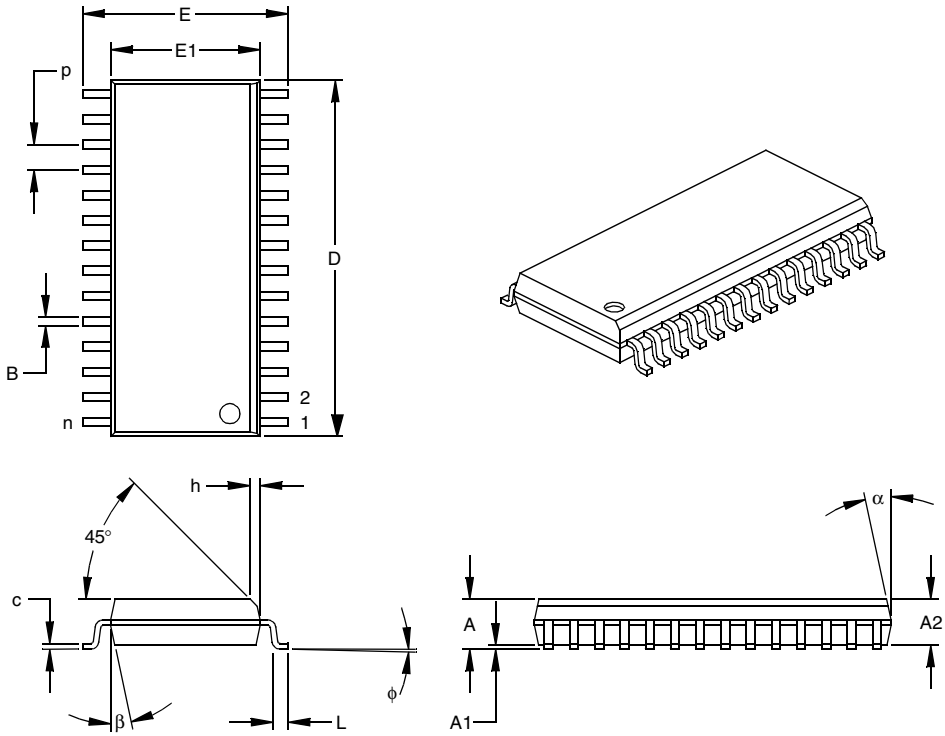


| Units | | INCHES* | | | MILLIMETERS | | |
|---|---|---|---|---|---|---|---|
| Dimension Limits | | MIN | NOM | MAX | MIN | NOM | MAX |
| Number of Pins | n | | 28 | | | 28 | |
| Pitch | p | | .050 | | | 1.27 | |
| Overall Height | A | .093 | .099 | .104 | 2.36 | 2.50 | 2.64 |
| Molded Package Thickness | A2 | .088 | .091 | .094 | 2.24 | 2.31 | 2.39 |
| Standoff § | A1 | .004 | .008 | .012 | 0.10 | 0.20 | 0.30 |
| Overall Width | E | .394 | .407 | .420 | 10.01 | 10.34 | 10.67 |
| Molded Package Width | E1 | .288 | .295 | .299 | 7.32 | 7.49 | 7.59 |
| Overall Length | D | .695 | .704 | .712 | 17.65 | 17.87 | 18.08 |
| Chamfer Distance | h | .010 | .020 | .029 | 0.25 | 0.50 | 0.74 |
| Foot Length | L | .016 | .033 | .050 | 0.41 | 0.84 | 1.27 |
| Foot Angle Top | ϕ | 0 | 4 | 8 | 0 | 4 | 8 |
| Lead Thickness | c | .009 | .011 | .013 | 0.23 | 0.28 | 0.33 |
| Lead Width | B | .014 | .017 | .020 | 0.36 | 0.42 | 0.51 |
| Mold Draft Angle Top | α | 0 | 12 | 15 | 0 | 12 | 15 |
| Mold Draft Angle Bottom | β | 0 | 12 | 15 | 0 | 12 | 15 |

* Controlling Parameter
§ Significant Characteristic
**Notes:**
Dimensions D and E1 do not include mold flash or protrusions. Mold flash or protrusions shall not exceed .010” (0.254mm) per side.
JEDEC Equivalent: MS-013
Drawing No. C04-052


© 2006 Microchip Technology Inc.

## 40-Lead Plastic Dual In-line (P) – 600 mil Body (PDIP)

**Note:** For the most current package drawings, please see the Microchip Packaging Specification located at http://www.microchip.com/packaging

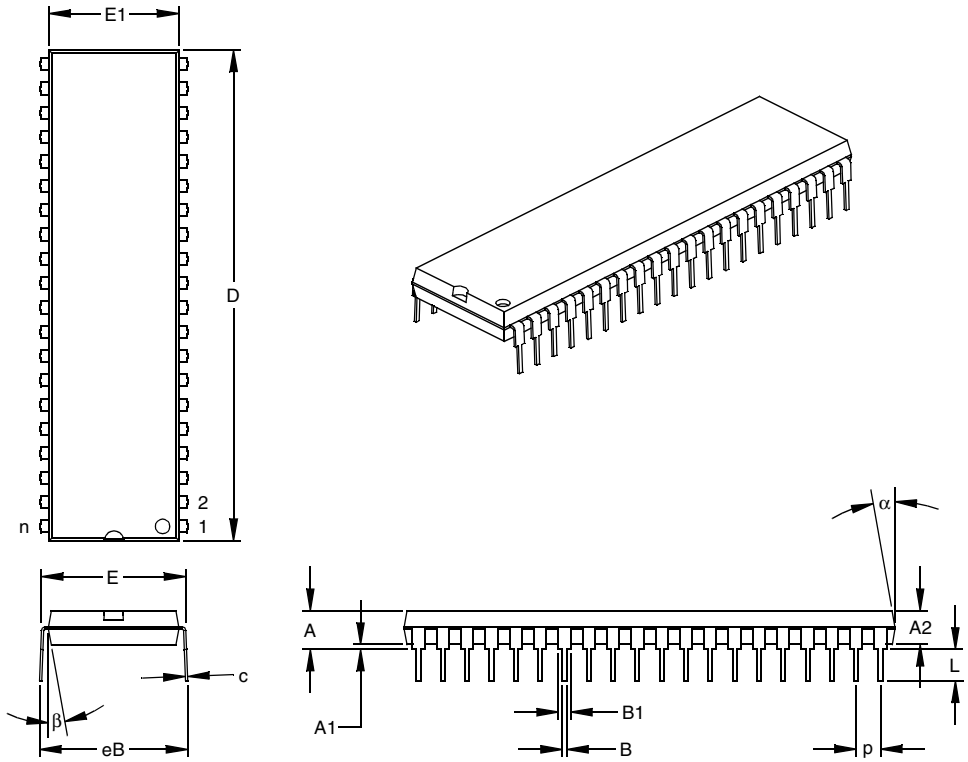


| Units | | INCHES* | | | MILLIMETERS | | |
|---|---|---|---|---|---|---|---|
| Dimension Limits | | MIN | NOM | MAX | MIN | NOM | MAX |
| Number of Pins | n | | 40 | | | 40 | |
| Pitch | p | | .100 | | | 2.54 | |
| Top to Seating Plane | A | .160 | .175 | .190 | 4.06 | 4.45 | 4.83 |
| Molded Package Thickness | A2 | .140 | .150 | .160 | 3.56 | 3.81 | 4.06 |
| Base to Seating Plane | A1 | .015 | | | 0.38 | | |
| Shoulder to Shoulder Width | E | .595 | .600 | .625 | 15.11 | 15.24 | 15.88 |
| Molded Package Width | E1 | .530 | .545 | .560 | 13.46 | 13.84 | 14.22 |
| Overall Length | D | 2.045 | 2.058 | 2.065 | 51.94 | 52.26 | 52.45 |
| Tip to Seating Plane | L | .120 | .130 | .135 | 3.05 | 3.30 | 3.43 |
| Lead Thickness | c | .008 | .012 | .015 | 0.20 | 0.29 | 0.38 |
| Upper Lead Width | B1 | .030 | .050 | .070 | 0.76 | 1.27 | 1.78 |
| Lower Lead Width | B | .014 | .018 | .022 | 0.36 | 0.46 | 0.56 |
| Overall Row Spacing § | eB | .620 | .650 | .680 | 15.75 | 16.51 | 17.27 |
| Mold Draft Angle Top | α | 5 | 10 | 15 | 5 | 10 | 15 |
| Mold Draft Angle Bottom | β | 5 | 10 | 15 | 5 | 10 | 15 |

* Controlling Parameter
§ Significant Characteristic
**Notes:**
Dimensions D and E1 do not include mold flash or protrusions. Mold flash or protrusions shall not exceed .010” (0.254mm) per side.
JEDEC Equivalent: MO-011
Drawing No. C04-016

## 44-Lead Plastic Thin Quad Flatpack (PT) 10x10x1 mm Body, 1.0/0.10 mm Lead Form (TQFP)

**Note:** For the most current package drawings, please see the Microchip Packaging Specification located at http://www.microchip.com/packaging

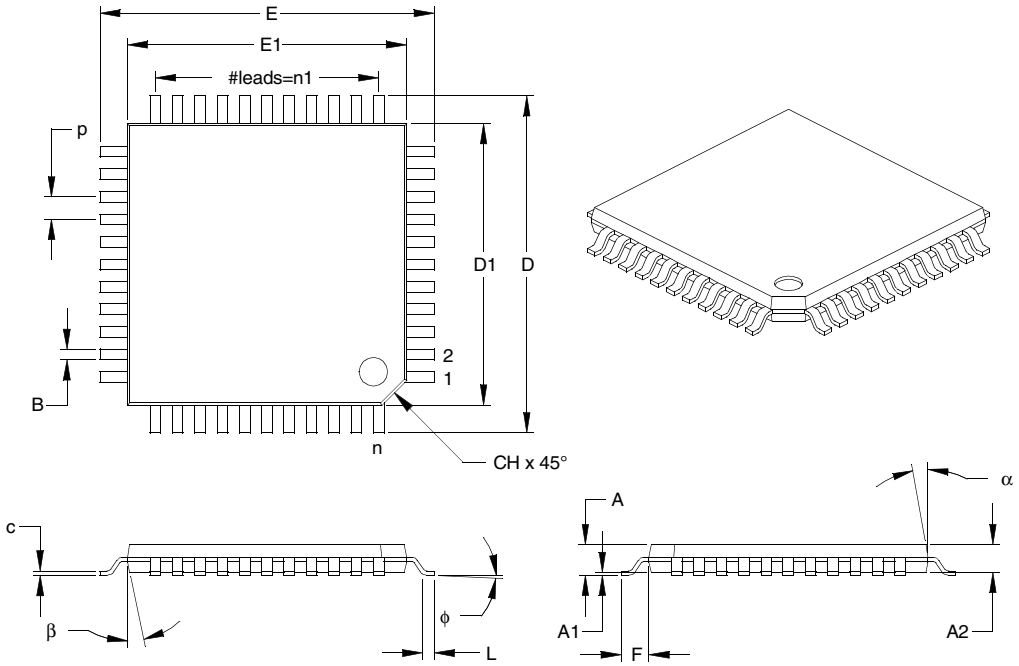


| Units | | INCHES | | | MILLIMETERS* | | |
|---|---|---|---|---|---|---|---|
| Dimension Limits | | MIN | NOM | MAX | MIN | NOM | MAX |
| Number of Pins | n | | 44 | | | 44 | |
| Pitch | p | | .031 | | | 0.80 | |
| Pins per Side | n1 | | 11 | | | 11 | |
| Overall Height | A | .039 | .043 | .047 | 1.00 | 1.10 | 1.20 |
| Molded Package Thickness | A2 | .037 | .039 | .041 | 0.95 | 1.00 | 1.05 |
| Standoff | A1 | .002 | .004 | .006 | 0.05 | 0.10 | 0.15 |
| Foot Length | L | .018 | .024 | .030 | 0.45 | 0.60 | 0.75 |
| Footprint (Reference) | F | | .039 REF. | | | 1.00 REF. | |
| Foot Angle | φ | 0 | 3.5 | 7 | 0 | 3.5 | 7 |
| Overall Width | E | .463 | .472 | .482 | 11.75 | 12.00 | 12.25 |
| Overall Length | D | .463 | .472 | .482 | 11.75 | 12.00 | 12.25 |
| Molded Package Width | E1 | .390 | .394 | .398 | 9.90 | 10.00 | 10.10 |
| Molded Package Length | D1 | .390 | .394 | .398 | 9.90 | 10.00 | 10.10 |
| Lead Thickness | c | .004 | .006 | .008 | 0.09 | 0.15 | 0.20 |
| Lead Width | B | .012 | .015 | .017 | 0.30 | 0.38 | 0.44 |
| Pin 1 Corner Chamfer | CH | .025 | .035 | .045 | 0.64 | 0.89 | 1.14 |
| Mold Draft Angle Top | α | 5 | 10 | 15 | 5 | 10 | 15 |
| Mold Draft Angle Bottom | β | 5 | 10 | 15 | 5 | 10 | 15 |

* Controlling Parameter

**Notes:**

Dimensions D and E1 do not include mold flash or protrusions. Mold flash or protrusions shall not exceed .010" (0.254mm) per side.

REF: Reference Dimension, usually without tolerance, for information purposes only.

See ASME Y14.5M

JEDEC Equivalent: MS-026

Drawing No. C04-076

Revised 07-22-05


© 2006 Microchip Technology Inc.

## 44-Lead Plastic Leaded Chip Carrier (L) – Square (PLCC)

**Note:** For the most current package drawings, please see the Microchip Packaging Specification located at http://www.microchip.com/packaging

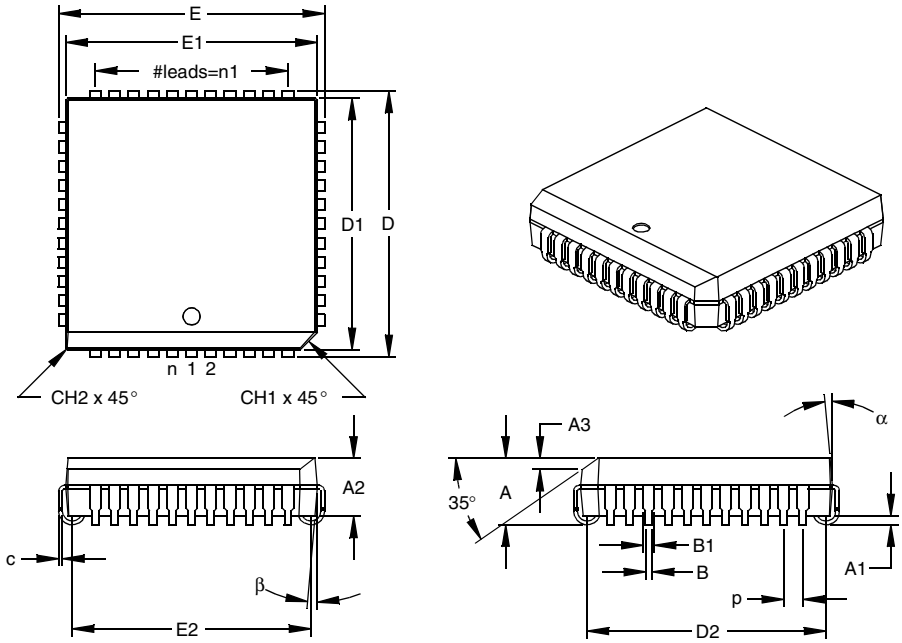


| Units | | INCHES* | | | MILLIMETERS | | |
|---|---|---|---|---|---|---|---|
| Dimension Limits | | MIN | NOM | MAX | MIN | NOM | MAX |
| Number of Pins | n | | 44 | | | 44 | |
| Pitch | p | | .050 | | | 1.27 | |
| Pins per Side | n1 | | 11 | | | 11 | |
| Overall Height | A | .165 | .173 | .180 | 4.19 | 4.39 | 4.57 |
| Molded Package Thickness | A2 | .145 | .153 | .160 | 3.68 | 3.87 | 4.06 |
| Standoff § | A1 | .020 | .028 | .035 | 0.51 | 0.71 | 0.89 |
| Side 1 Chamfer Height | A3 | .024 | .029 | .034 | 0.61 | 0.74 | 0.86 |
| Corner Chamfer 1 | CH1 | .040 | .045 | .050 | 1.02 | 1.14 | 1.27 |
| Corner Chamfer (others) | CH2 | .000 | .005 | .010 | 0.00 | 0.13 | 0.25 |
| Overall Width | E | .685 | .690 | .695 | 17.40 | 17.53 | 17.65 |
| Overall Length | D | .685 | .690 | .695 | 17.40 | 17.53 | 17.65 |
| Molded Package Width | E1 | .650 | .653 | .656 | 16.51 | 16.59 | 16.66 |
| Molded Package Length | D1 | .650 | .653 | .656 | 16.51 | 16.59 | 16.66 |
| Footprint Width | E2 | .590 | .620 | .630 | 14.99 | 15.75 | 16.00 |
| Footprint Length | D2 | .590 | .620 | .630 | 14.99 | 15.75 | 16.00 |
| Lead Thickness | c | .008 | .011 | .013 | 0.20 | 0.27 | 0.33 |
| Upper Lead Width | B1 | .026 | .029 | .032 | 0.66 | 0.74 | 0.81 |
| Lower Lead Width | B | .013 | .020 | .021 | 0.33 | 0.51 | 0.53 |
| Mold Draft Angle Top | α | 0 | 5 | 10 | 0 | 5 | 10 |
| Mold Draft Angle Bottom | β | 0 | 5 | 10 | 0 | 5 | 10 |

* Controlling Parameter
§ Significant Characteristic
**Notes:**
Dimensions D and E1 do not include mold flash or protrusions. Mold flash or protrusions shall not exceed .010” (0.254mm) per side.
JEDEC Equivalent: MO-047
Drawing No. C04-048

**NOTES:**


© 2006 Microchip Technology Inc.

# APPENDIX A: REVISION HISTORY

## Revision A (June 2001)

Original data sheet for the PIC18FXX2 family.

## Revision B (August 2002)

This revision includes the DC and AC Characteristics Graphs and Tables. The Electrical Specifications in Section 22.0 have been updated and there have been minor corrections to the data sheet text.

## Revision C (October 2006)

Packaging diagrams updated.

# APPENDIX B: DEVICE DIFFERENCES

The differences between the devices listed in this data sheet are shown in Table B-1.

**TABLE B-1: DEVICE DIFFERENCES**

| Feature | PIC18F242 | PIC18F252 | PIC18F442 | PIC18F452 |
|---|---|---|---|---|
| Program Memory (Kbytes) | 16 | 32 | 16 | 32 |
| Data Memory (Bytes) | 768 | 1536 | 768 | 1536 |
| A/D Channels | 5 | 5 | 8 | 8 |
| Parallel Slave Port (PSP) | No | No | Yes | Yes |
| Package Types | 28-pin DIP<br>28-pin SOIC | 28-pin DIP<br>28-pin SOIC | 40-pin DIP<br>44-pin PLCC<br>44-pin TQFP | 40-pin DIP<br>44-pin PLCC<br>44-pin TQFP |

© 2006 Microchip Technology Inc.

## APPENDIX C: CONVERSION CONSIDERATIONS

This appendix discusses the considerations for converting from previous versions of a device to the ones listed in this data sheet. Typically, these changes are due to the differences in the process technology used. An example of this type of conversion is from a PIC16C74A to a PIC16C74B.

**Not Applicable**

## APPENDIX D: MIGRATION FROM BASELINE TO ENHANCED DEVICES

This section discusses how to migrate from a Baseline device (i.e., PIC16C5X) to an Enhanced MCU device (i.e., PIC18FXXX).

The following are the list of modifications over the PIC16C5X microcontroller family:

**Not Currently Available**


© 2006 Microchip Technology Inc.

## APPENDIX E: MIGRATION FROM MID-RANGE TO ENHANCED DEVICES

A detailed discussion of the differences between the mid-range MCU devices (i.e., PIC16CXXX) and the enhanced devices (i.e., PIC18FXXX) is provided in AN716, “Migrating Designs from PIC16C74A/74B to PIC18F442”. The changes discussed, while device specific, are generally applicable to all mid-range to enhanced device migrations.

This Application Note is available as Literature Number DS00716.

## APPENDIX F: MIGRATION FROM HIGH-END TO ENHANCED DEVICES

A detailed discussion of the migration pathway and differences between the high-end MCU devices (i.e., PIC17CXXX) and the enhanced devices (i.e., PIC18FXXX) is provided in AN726, “PIC17CXXX to PIC18FXXX Migration”. This Application Note is available as Literature Number DS00726.

**NOTES:**


© 2006 Microchip Technology Inc.

# INDEX

## A


A/D ..... 181
  A/D Converter Flag (ADIF Bit) ..... 183
  A/D Converter Interrupt, Configuring ..... 184
  Acquisition Requirements ..... 184
  ADCON0 Register ..... 181
  ADCON1 Register ..... 181
  ADRESH Register ..... 181
  ADRESH/ADRESL Registers ..... 183
  ADRESL Register ..... 181
  Analog Port Pins ..... 99, 100
  Analog Port Pins, Configuring ..... 186
  Associated Registers ..... 188
  Configuring the Module ..... 184
  Conversion Clock (TAD) ..... 186
  Conversion Status (GO/DONE Bit) ..... 183
  Conversions ..... 187
  Converter Characteristics ..... 287
  Equations
    Acquisition Time ..... 185
    Minimum Charging Time ..... 185
  Examples
    Calculating the Minimum Required
      Acquisition Time ..... 185
  Result Registers ..... 187
  Special Event Trigger (CCP) ..... 120, 188
  TAD vs. Device Operating Frequencies ..... 186
  Use of the CCP2 Trigger ..... 188
Absolute Maximum Ratings ..... 259
AC (Timing) Characteristics ..... 269
  Load Conditions for Device Timing
    Specifications ..... 270
  Parameter Symbology ..... 269
  Temperature and Voltage Specifications - AC ..... 270
  Timing Conditions ..... 270
ACKSTAT Status Flag ..... 155
ADCON0 Register ..... 181
  GO/DONE Bit ..... 183
ADCON1 Register ..... 181
ADDLW ..... 217
ADDWF ..... 217
ADDWFC ..... 218
ADRESH Register ..... 181
ADRESH/ADRESL Registers ..... 183
ADRESL Register ..... 181
Analog-to-Digital Converter. *See* A/D
ANDLW ..... 218
ANDWF ..... 219
Assembler
  MPASM Assembler ..... 253


## B


Baud Rate Generator ..... 151
BC ..... 219
BCF ..... 220
BF Status Flag ..... 155
Block Diagrams
  A/D Converter ..... 183
  Analog Input Model ..... 184
  Baud Rate Generator ..... 151
  Capture Mode Operation ..... 119
  Compare Mode Operation ..... 120
  Low Voltage Detect
    External Reference Source ..... 190
    Internal Reference Source ..... 190
  MSSP
    I$^2$C Mode ..... 134
  MSSP (SPI Mode) ..... 125
  On-Chip Reset Circuit ..... 25
  Parallel Slave Port (PORTD and PORTE) ..... 100
  PIC18F2X2 ..... 8
  PIC18F4X2 ..... 9
  PLL ..... 19
  PORTC (Peripheral Output Override) ..... 93
  PORTD (I/O Mode) ..... 95
  PORTE (I/O Mode) ..... 97
  PWM Operation (Simplified) ..... 122
  RA3:RA0 and RA5 Port Pins ..... 87
  RA4/T0CKI Pin ..... 88
  RA6 Pin ..... 88
  RB2:RB0 Port Pins ..... 91
  RB3 Pin ..... 91
  RB7:RB4 Port Pins ..... 90
  Table Read Operation ..... 55
  Table Write Operation ..... 56
  Table Writes to FLASH Program Memory ..... 61
  Timer0 in 16-bit Mode ..... 104
  Timer0 in 8-bit Mode ..... 104
  Timer1 ..... 108
  Timer1 (16-bit R/W Mode) ..... 108
  Timer2 ..... 112
  Timer3 ..... 114
  Timer3 (16-bit R/W Mode) ..... 114
  USART
    Asynchronous Receive ..... 174
    Asynchronous Transmit ..... 172
  Watchdog Timer ..... 204
BN ..... 220
BNC ..... 221
BNN ..... 221
BNOV ..... 222
BNZ ..... 222
BOR. *See* Brown-out Reset
BOV ..... 225
BRA ..... 223
BRG. *See* Baud Rate Generator
Brown-out Reset (BOR) ..... 26
BSF ..... 223
BTFSC ..... 224
BTFSS ..... 224
BTG ..... 225
Bus Collision During a STOP Condition ..... 163
BZ ..... 226

## C


CALL ..... 226
Capture (CCP Module) ..... 119
  Associated Registers ..... 121
  CCP Pin Configuration ..... 119
  CCPR1H:CCPR1L Registers ..... 119
  Software Interrupt ..... 119
  Timer1/Timer3 Mode Selection ..... 119
Capture/Compare/PWM (CCP) ..... 117
  Capture Mode. *See* Capture
  CCP1 ..... 118
    CCPR1H Register ..... 118
    CCPR1L Register ..... 118
  CCP2 ..... 118
    CCPR2H Register ..... 118
    CCPR2L Register ..... 118
  Compare Mode. *See* Compare
  Interaction of Two CCP Modules ..... 118
  PWM Mode. *See* PWM
  Timer Resources ..... 118
Clocking Scheme/Instruction Cycle ..... 39
CLRF ..... 227
CLRWDT ..... 227
Code Examples
  16 x 16 Signed Multiply Routine ..... 72
  16 x 16 Unsigned Multiply Routine ..... 72
  8 x 8 Signed Multiply Routine ..... 71
  8 x 8 Unsigned Multiply Routine ..... 71
  Changing Between Capture Prescalers ..... 119
  Data EEPROM Read ..... 67
  Data EEPROM Refresh Routine ..... 68
  Data EEPROM Write ..... 67
  Erasing a FLASH Program Memory Row ..... 60
  Fast Register Stack ..... 39
  How to Clear RAM (Bank1) Using
    Indirect Addressing ..... 50
  Initializing PORTA ..... 87
  Initializing PORTB ..... 90
  Initializing PORTC ..... 93
  Initializing PORTD ..... 95
  Initializing PORTE ..... 97
  Loading the SSPBUF (SSPSR) Register ..... 128
  Reading a FLASH Program Memory Word ..... 59
  Saving STATUS, WREG and BSR
    Registers in RAM ..... 85
  Writing to FLASH Program Memory ..... 62–63
Code Protection ..... 195
COMF ..... 228
Compare (CCP Module) ..... 120
  Associated Registers ..... 121
  CCP Pin Configuration ..... 120
  CCPR1 Register ..... 120
  Software Interrupt ..... 120
  Special Event Trigger ..... 109, 115, 120, 188
  Timer1/Timer3 Mode Selection ..... 120
Configuration Bits ..... 195
Context Saving During Interrupts ..... 85
Conversion Considerations ..... 314
CPFSEQ ..... 228
CPFSGT ..... 229
CPFSLT ..... 229


## D


Data EEPROM Memory
  Associated Registers ..... 69
  EEADR Register ..... 65
  EECON1 Register ..... 65
  EECON2 Register ..... 65
  Operation During Code Protect ..... 68
  Protection Against Spurious Write ..... 68
  Reading ..... 67
  Using ..... 68
  Write Verify ..... 68
  Writing ..... 67
Data Memory ..... 42
  General Purpose Registers ..... 42
  Map for PIC18F242/442 ..... 43
  Map for PIC18F252/452 ..... 44
  Special Function Registers ..... 42
DAW ..... 230
DC and AC Characteristics
  Graphs and Tables ..... 289
DC Characteristics ..... 261, 265
DCFSNZ ..... 231
DECF ..... 230
DECFSZ ..... 231
Development Support ..... 253
Device Differences ..... 313
Device Overview ..... 7
  Features ..... 7
Direct Addressing ..... 51
  Example ..... 49


## E


Electrical Characteristics ..... 259
Errata ..... 5


## F


Firmware Instructions ..... 211
FLASH Program Memory ..... 55
  Associated Registers ..... 63
  Control Registers ..... 56
  Erase Sequence ..... 60
  Erasing ..... 60
  Operation During Code Protect ..... 63
  Reading ..... 59
  TABLAT Register ..... 58
  Table Pointer ..... 58
    Boundaries Based on Operation ..... 58
  Table Pointer Boundaries ..... 58
  Table Reads and Table Writes ..... 55
    Block Diagrams
      Reads from FLASH Program Memory ..... 59
  Writing to ..... 61
    Protection Against Spurious Writes ..... 63
    Unexpected Termination ..... 63
    Write Verify ..... 63


## G


General Call Address Support ..... 148
GOTO ..... 232



© 2006 Microchip Technology Inc.

## I


I/O Ports ..... 87
I²C (MSSP Module)
  ACK Pulse ..... 139
  Read/Write Bit Information (R/W Bit) ..... 139
I²C (SSP Module)
  ACK Pulse ..... 138
I²C Master Mode Reception ..... 155
I²C Mode
  Clock Stretching ..... 144
I²C Mode (MSSP Module) ..... 134
  Registers ..... 134
I²C Module
  ACK Pulse ..... 138, 139
  Acknowledge Sequence Timing ..... 158
  Baud Rate Generator ..... 151
  Bus Collision
    Repeated START Condition ..... 162
    START Condition ..... 160
  Clock Arbitration ..... 152
  Effect of a RESET ..... 159
  General Call Address Support ..... 148
  Master Mode ..... 149
    Operation ..... 150
    Repeated START Condition Timing ..... 154
  Master Mode START Condition ..... 153
  Master Mode Transmission ..... 155
  Multi-Master Communication, Bus Collision
    and Arbitration ..... 159
  Multi-Master Mode ..... 159
  Operation ..... 138
  Read/Write Bit Information (R/W Bit) ..... 138, 139
  Serial Clock (RC3/SCK/SCL) ..... 139
  Slave Mode ..... 138
    Addressing ..... 138
    Reception ..... 139
    Transmission ..... 139
  Slave Mode Timing (10-bit Reception,
    SEN = 0) ..... 142
  Slave Mode Timing (10-bit Reception,
    SEN = 1) ..... 147
  Slave Mode Timing (10-bit Transmission) ..... 143
  Slave Mode Timing (7-bit Reception,
    SEN = 0) ..... 140
  Slave Mode Timing (7-bit Reception,
    SEN = 1) ..... 146
  Slave Mode Timing (7-bit Transmission) ..... 141
  SLEEP Operation ..... 159
  STOP Condition Timing ..... 158
ICEPIC In-Circuit Emulator ..... 254
ID Locations ..... 195, 210
INCF ..... 232
INCFSZ ..... 233
In-Circuit Debugger ..... 210
In-Circuit Serial Programming (ICSP) ..... 195, 210
Indirect Addressing ..... 51
  INDF and FSR Registers ..... 50
Indirect Addressing Operation ..... 51
Indirect File Operand ..... 42
INFSNZ ..... 233
Instruction Cycle ..... 39
Instruction Flow/Pipelining ..... 40
Instruction Format ..... 213
Instruction Set ..... 211
  ADDLW ..... 217
  ADDWF ..... 217
  ADDWFC ..... 218
  ANDLW ..... 218
  ANDWF ..... 219
  BC ..... 219
  BCF ..... 220
  BN ..... 220
  BNC ..... 221
  BNN ..... 221
  BNOV ..... 222
  BNZ ..... 222
  BOV ..... 225
  BRA ..... 223
  BSF ..... 223
  BTFSC ..... 224
  BTFSS ..... 224
  BTG ..... 225
  BZ ..... 226
  CALL ..... 226
  CLRF ..... 227
  CLRWDT ..... 227
  COMF ..... 228
  CPFSEQ ..... 228
  CPFSGT ..... 229
  CPFSLT ..... 229
  DAW ..... 230
  DCFSNZ ..... 231
  DECF ..... 230
  DECFSZ ..... 231
  GOTO ..... 232
  INCF ..... 232
  INCFSZ ..... 233
  INFSNZ ..... 233
  IORLW ..... 234
  IORWF ..... 234
  LFSR ..... 235
  MOVF ..... 235
  MOVFF ..... 236
  MOVLB ..... 236
  MOVLW ..... 237
  MOVWF ..... 237
  MULLW ..... 238
  MULWF ..... 238
  NEGF ..... 239
  NOP ..... 239
  POP ..... 240
  PUSH ..... 240
  RCALL ..... 241
  RESET ..... 241
  RETFIE ..... 242
  RETLW ..... 242
  RETURN ..... 243
  RLCF ..... 243
  RLNCF ..... 244
  RRCF ..... 244
  RRNCF ..... 245
  SETF ..... 245
  SLEEP ..... 246
  SUBFWB ..... 246
  SUBLW ..... 247
  SUBWF ..... 247
  SUBWFB ..... 248
  SWAPF ..... 248

TBLRD ..... 249
TBLWT ..... 250
TSTFSZ ..... 251
XORLW ..... 251
XORWF ..... 252
Summary Table ..... 214
Instructions in Program Memory ..... 40
Two-Word Instructions ..... 41
INT Interrupt (RB0/INT). *See* Interrupt Sources
INTCON Register
RBIF Bit ..... 90
INTCON Registers ..... 75–77
Inter-Integrated Circuit. *See* I$^2$C
Interrupt Sources ..... 195
A/D Conversion Complete ..... 184
Capture Complete (CCP) ..... 119
Compare Complete (CCP) ..... 120
INT0 ..... 85
Interrupt-on-Change (RB7:RB4 ) ..... 90
PORTB, Interrupt-on-Change ..... 85
RB0/INT Pin, External ..... 85
TMR0 ..... 85
TMR0 Overflow ..... 105
TMR1 Overflow ..... 107, 109
TMR2 to PR2 Match ..... 112
TMR2 to PR2 Match (PWM) ..... 111, 122
TMR3 Overflow ..... 113, 115
USART Receive/Transmit Complete ..... 165
Interrupts ..... 73
Logic ..... 74
Interrupts, Enable Bits
CCP1 Enable (CCP1IE Bit) ..... 119
Interrupts, Flag Bits
A/D Converter Flag (ADIF Bit) ..... 183
CCP1 Flag (CCP1IF Bit) ..... 119
CCP1IF Flag (CCP1IF Bit) ..... 120
Interrupt-on-Change (RB7:RB4) Flag
(RBIF Bit) ..... 90
IORLW ..... 234
IORWF ..... 234
IPR Registers ..... 82–83


## K


KEELOQ Evaluation and Programming Tools ..... 256


## L


LFSR ..... 235
Lookup Tables
Computed GOTO ..... 41
Table Reads, Table Writes ..... 41
Low Voltage Detect ..... 189
Converter Characteristics ..... 267
Effects of a RESET ..... 193
Operation ..... 192
Current Consumption ..... 193
During SLEEP ..... 193
Reference Voltage Set Point ..... 193
Typical Application ..... 189
LVD. *See* Low Voltage Detect. ..... 189


## M


Master SSP (MSSP) Module Overview ..... 125
Master Synchronous Serial Port (MSSP). *See* MSSP.
Master Synchronous Serial Port. *See* MSSP
Memory Organization
Data Memory ..... 42
Program Memory ..... 35
Memory Programming Requirements ..... 268
Migration from Baseline to Enhanced Devices ..... 314
Migration from High-End to Enhanced Devices ..... 315
Migration from Mid-Range to Enhanced Devices ..... 315
MOVF ..... 235
MOVFF ..... 236
MOVLB ..... 236
MOVLW ..... 237
MOVWF ..... 237
MPLAB C17 and MPLAB C18 C Compilers ..... 253
MPLAB ICD In-Circuit Debugger ..... 255
MPLAB ICE High Performance Universal In-Circuit
Emulator with MPLAB IDE ..... 254
MPLAB Integrated Development
Environment Software ..... 253
MPLINK Object Linker/MPLIB Object Librarian ..... 254
MSSP ..... 125
Control Registers (general) ..... 125
Enabling SPI I/O ..... 129
Operation ..... 128
Typical Connection ..... 129
MSSP Module
SPI Master Mode ..... 130
SPI Master./Slave Connection ..... 129
SPI Slave Mode ..... 131
MULLW ..... 238
MULWF ..... 238


## N


NEGF ..... 239
NOP ..... 239


## O


Opcode Field Descriptions ..... 212
OPTION_REG Register
PSA Bit ..... 105
T0CS Bit ..... 105
T0PS2:T0PS0 Bits ..... 105
T0SE Bit ..... 105
Oscillator Configuration ..... 17
EC ..... 17
ECIO ..... 17
HS ..... 17
HS + PLL ..... 17
LP ..... 17
RC ..... 17
RCIO ..... 17
XT ..... 17
Oscillator Selection ..... 195
Oscillator, Timer1 ..... 107, 109, 115
Oscillator, Timer3 ..... 113
Oscillator, WDT ..... 203



© 2006 Microchip Technology Inc.

## P


Packaging ..... 305
  Details ..... 307
  Marking Information ..... 305
Parallel Slave Port
  PORTD ..... 100
Parallel Slave Port (PSP) ..... 95, 100
  Associated Registers ..... 101
  RE0/$\overline{RD}$/AN5 Pin ..... 99, 100
  RE1/$\overline{WR}$/AN6 Pin ..... 99, 100
  RE2/$\overline{CS}$/AN7 Pin ..... 99, 100
  Select (PSPMODE Bit) ..... 95, 100
PIC18F2X2 Pin Functions
  $\overline{MCLR}$/VPP ..... 10
  OSC1/CLKI ..... 10
  OSC2/CLKO/RA6 ..... 10
  RA0/AN0 ..... 10
  RA1/AN1 ..... 10
  RA2/AN2/VREF- ..... 10
  RA3/AN3/VREF+ ..... 10
  RA4/T0CKI ..... 10
  RA5/AN4/$\overline{SS}$/LVDIN ..... 10
  RB0/INT0 ..... 11
  RB1/INT1 ..... 11
  RB2/INT2 ..... 11
  RB3/CCP2 ..... 11
  RB4 ..... 11
  RB5/PGM ..... 11
  RB6/PGC ..... 11
  RB7/PGD ..... 11
  RC0/T1OSO/T1CKI ..... 12
  RC1/T1OSI/CCP2 ..... 12
  RC2/CCP1 ..... 12
  RC3/SCK/SCL ..... 12
  RC4/SDI/SDA ..... 12
  RC5/SDO ..... 12
  RC6/TX/CK ..... 12
  RC7/RX/DT ..... 12
  VDD ..... 12
  VSS ..... 12
PIC18F4X2 Pin Functions
  $\overline{MCLR}$/VPP ..... 13
  OSC1/CLKI ..... 13
  OSC2/CLKO ..... 13
  RA0/AN0 ..... 13
  RA1/AN1 ..... 13
  RA2/AN2/VREF- ..... 13
  RA3/AN3/VREF+ ..... 13
  RA4/T0CKI ..... 13
  RA5/AN4/$\overline{SS}$/LVDIN ..... 13
  RB0/INT ..... 14
  RB1 ..... 14
  RB2 ..... 14
  RB3 ..... 14
  RB4 ..... 14
  RB5/PGM ..... 14
  RB6/PGC ..... 14
  RB7/PGD ..... 14
  RC0/T1OSO/T1CKI ..... 15
  RC1/T1OSI/CCP2 ..... 15
  RC2/CCP1 ..... 15
  RC3/SCK/SCL ..... 15
  RC4/SDI/SDA ..... 15
  RC5/SDO ..... 15
  RC6/TX/CK ..... 15
  RC7/RX/DT ..... 15
  RD0/PSP0 ..... 16
  RD1/PSP1 ..... 16
  RD2/PSP2 ..... 16
  RD3/PSP3 ..... 16
  RD4/PSP4 ..... 16
  RD5/PSP5 ..... 16
  RD6/PSP6 ..... 16
  RD7/PSP7 ..... 16
  RE0/$\overline{RD}$/AN5 ..... 16
  RE1/$\overline{WR}$/AN6 ..... 16
  RE2/$\overline{CS}$/AN7 ..... 16
  VDD ..... 16
  VSS ..... 16
PIC18FXX2 Voltage-Frequency Graph
  (Industrial) ..... 260
PIC18LFXX2 Voltage-Frequency Graph
  (Industrial) ..... 260
PICDEM 1 Low Cost PICmicro
  Demonstration Board ..... 255
PICDEM 17 Demonstration Board ..... 256
PICDEM 2 Low Cost PIC16CXX
  Demonstration Board ..... 255
PICDEM 3 Low Cost PIC16CXXX
  Demonstration Board ..... 256
PICSTART Plus Entry Level Development
  Programmer ..... 255
PIE Registers ..... 80–81
Pinout I/O Descriptions
  PIC18F2X2 ..... 10
PIR Registers ..... 78–79
PLL Lock Time-out ..... 26
Pointer, FSR ..... 50
POP ..... 240
POR. *See* Power-on Reset
PORTA
  Associated Registers ..... 89
  LATA Register ..... 87
  PORTA Register ..... 87
  TRISA Register ..... 87
PORTB
  Associated Registers ..... 92
  LATB Register ..... 90
  PORTB Register ..... 90
  RB0/INT Pin, External ..... 85
  RB7:RB4 Interrupt-on-Change Flag (RBIF Bit) ..... 90
  TRISB Register ..... 90
PORTC
  Associated Registers ..... 94
  LATC Register ..... 93
  PORTC Register ..... 93
  RC3/SCK/SCL Pin ..... 139
  RC7/RX/DT Pin ..... 168
  TRISC Register ..... 93, 165
PORTD
  Associated Registers ..... 96
  LATD Register ..... 95
  Parallel Slave Port (PSP) Function ..... 95
  PORTD Register ..... 95
  TRISD Register ..... 95

PORTE
Analog Port Pins ..... 99, 100
Associated Registers ..... 99
LATE Register ..... 97
PORTE Register ..... 97
PSP Mode Select (PSPMODE Bit) ..... 95, 100
RE0/RD/AN5 Pin ..... 99, 100
RE1/WR/AN6 Pin ..... 99, 100
RE2/CS/AN7 Pin ..... 99, 100
TRISE Register ..... 97
Postscaler, WDT
Assignment (PSA Bit) ..... 105
Rate Select (T0PS2:T0PS0 Bits) ..... 105
Switching Between Timer0 and WDT ..... 105
Power-down Mode. *See* SLEEP
Power-on Reset (POR) ..... 26
Oscillator Start-up Timer (OST) ..... 26
Power-up Timer (PWRT) ..... 26
Prescaler, Capture ..... 119
Prescaler, Timer0 ..... 105
Assignment (PSA Bit) ..... 105
Rate Select (T0PS2:T0PS0 Bits) ..... 105
Switching Between Timer0 and WDT ..... 105
Prescaler, Timer2 ..... 122
PRO MATE II Universal Device Programmer ..... 255
Product Identification System ..... 327
Program Counter
PCL Register ..... 39
PCLATH Register ..... 39
PCLATU Register ..... 39
Program Memory
Interrupt Vector ..... 35
Map and Stack for PIC18F442/242 ..... 36
Map and Stack for PIC18F452/252 ..... 36
RESET Vector ..... 35
Program Verification and Code Protection ..... 207
Associated Registers ..... 207
Programming, Device Instructions ..... 211
PSP. *See* Parallel Slave Port.
Pulse Width Modulation. *See* PWM (CCP Module).
PUSH ..... 240
PWM (CCP Module) ..... 122
Associated Registers ..... 123
CCPR1H:CCPR1L Registers ..... 122
Duty Cycle ..... 122
Example Frequencies/Resolutions ..... 123
Period ..... 122
Setup for PWM Operation ..... 123
TMR2 to PR2 Match ..... 111, 122

## Q

Q Clock ..... 122

## R

RAM. *See* Data Memory
RC Oscillator ..... 18
RCALL ..... 241
RCSTA Register
SPEN Bit ..... 165
Register File ..... 42
Registers
ADCON0 (A/D Control 0) ..... 181
ADCON1 (A/D Control 1) ..... 182
CCP1CON and CCP2CON
(Capture/Compare/PWM Control) ..... 117
CONFIG1H (Configuration 1 High) ..... 196
CONFIG2H (Configuration 2 High) ..... 197
CONFIG2L (Configuration 2 Low) ..... 197
CONFIG3H (Configuration 3 High) ..... 198
CONFIG4L (Configuration 4 Low) ..... 198
CONFIG5H (Configuration 5 High) ..... 199
CONFIG5L (Configuration 5 Low) ..... 199
CONFIG6H (Configuration 6 High) ..... 200
CONFIG6L (Configuration 6 Low) ..... 200
CONFIG7H (Configuration 7 High) ..... 201
CONFIG7L (Configuration 7 Low) ..... 201
DEVID1 (Device ID Register 1) ..... 202
DEVID2 (Device ID Register 2) ..... 202
EECON1 (Data EEPROM Control 1) ..... 57, 66
File Summary ..... 46–48
INTCON (Interrupt Control) ..... 75
INTCON2 (Interrupt Control 2) ..... 76
INTCON3 (Interrupt Control 3) ..... 77
IPR1 (Peripheral Interrupt Priority 1) ..... 82
IPR2 (Peripheral Interrupt Priority 2) ..... 83
LVDCON (LVD Control) ..... 191
OSCCON (Oscillator Control) ..... 21
PIE1 (Peripheral Interrupt Enable 1) ..... 80
PIE2 (Peripheral Interrupt Enable 2) ..... 81
PIR1 (Peripheral Interrupt Request 1) ..... 78
PIR2 (Peripheral Interrupt Request 2) ..... 79
RCON (Register Control) ..... 84
RCON (RESET Control) ..... 53
RCSTA (Receive Status and Control) ..... 167
SSPCON1 (MSSP Control 1)
$I^2C$ Mode ..... 136
SPI Mode ..... 127
SSPCON2 (MSSP Control 2)
$I^2C$ Mode ..... 137
SSPSTAT (MSSP Status)
$I^2C$ Mode ..... 135
SPI Mode ..... 126
STATUS ..... 52
STKPTR (Stack Pointer) ..... 38
T0CON (Timer0 Control) ..... 103
T1CON (Timer 1 Control) ..... 107
T2CON (Timer 2 Control) ..... 111
T3CON (Timer3 Control) ..... 113
TRISE ..... 98
TXSTA (Transmit Status and Control) ..... 166
WDTCON (Watchdog Timer Control) ..... 203
RESET ..... 25, 195, 241
Brown-out Reset (BOR) ..... 195
MCLR Reset (During SLEEP) ..... 25
MCLR Reset (Normal Operation) ..... 25
Oscillator Start-up Timer (OST) ..... 195
Power-on Reset (POR) ..... 25, 195
Power-up Timer (PWRT) ..... 195
Programmable Brown-out Reset (BOR) ..... 25
RESET Instruction ..... 25
Stack Full Reset ..... 25
Stack Underflow Reset ..... 25
Watchdog Timer (WDT) Reset ..... 25


© 2006 Microchip Technology Inc.

RETFIE ..... 242
RETLW ..... 242
RETURN ..... 243
Revision History ..... 313
RLCF ..... 243
RLNCF ..... 244
RRCF ..... 244
RRNCF ..... 245

## S

SCI. *See* USART
SCK ..... 125
SDI ..... 125
SDO ..... 125
Serial Clock, SCK ..... 125
Serial Communication Interface. *See* USART
Serial Data In, SDI ..... 125
Serial Data Out, SDO ..... 125
Serial Peripheral Interface. *See* SPI
SETF ..... 245
Slave Select Synchronization ..... 131
Slave Select, $\overline{SS}$ ..... 125
SLEEP ..... 195, 205, 246
Software Simulator (MPLAB SIM) ..... 254
Special Event Trigger. *See* Compare
Special Features of the CPU ..... 195
    Configuration Registers ..... 196–201
Special Function Registers ..... 42
    Map ..... 45
SPI
    Master Mode ..... 130
    Serial Clock ..... 125
    Serial Data In ..... 125
    Serial Data Out ..... 125
    Slave Select ..... 125
    SPI Clock ..... 130
    SPI Mode ..... 125
SPI Master/Slave Connection ..... 129
SPI Module
    Associated Registers ..... 133
    Bus Mode Compatibility ..... 133
    Effects of a RESET ..... 133
    Master/Slave Connection ..... 129
    Slave Mode ..... 131
    Slave Select Synchronization ..... 131
    Slave Synch Timing ..... 131
    SLEEP Operation ..... 133
$\overline{SS}$ ..... 125
SSP
    $I^2C$ Mode. *See* $I^2C$
    SPI Mode ..... 125
    SPI Mode. *See* SPI
    SSPBUF Register ..... 130
    SSPSR Register ..... 130
    TMR2 Output for Clock Shift ..... 111, 112
SSPOV Status Flag ..... 155
SSPSTAT Register
    R/$\overline{W}$ Bit ..... 138, 139
Status Bits
    Significance and the Initialization Condition
        for RCON Register ..... 27
SUBFWB ..... 246
SUBLW ..... 247
SUBWF ..... 247
SUBWFB ..... 248
SWAPF ..... 248

## T

TABLAT Register ..... 58
Table Pointer Operations (table) ..... 58
TBLPTR Register ..... 58
TBLRD ..... 249
TBLWT ..... 250
Time-out Sequence ..... 26
    Time-out in Various Situations ..... 27
Timer0 ..... 103
    16-bit Mode Timer Reads and Writes ..... 105
    Associated Registers ..... 105
    Clock Source Edge Select (T0SE Bit) ..... 105
    Clock Source Select (T0CS Bit) ..... 105
    Operation ..... 105
    Overflow Interrupt ..... 105
    Prescaler. *See* Prescaler, Timer0
Timer1 ..... 107
    16-bit Read/Write Mode ..... 109
    Associated Registers ..... 110
    Operation ..... 108
    Oscillator ..... 107, 109
    Overflow Interrupt ..... 107, 109
    Special Event Trigger (CCP) ..... 109, 120
    TMR1H Register ..... 107
    TMR1L Register ..... 107
Timer2 ..... 111
    Associated Registers ..... 112
    Operation ..... 111
    Postscaler. *See* Postscaler, Timer2
    PR2 Register ..... 111, 122
    Prescaler. *See* Prescaler, Timer2
    SSP Clock Shift ..... 111, 112
    TMR2 Register ..... 111
    TMR2 to PR2 Match Interrupt ..... 111, 112, 122
Timer3 ..... 113
    Associated Registers ..... 115
    Operation ..... 114
    Oscillator ..... 113, 115
    Overflow Interrupt ..... 113, 115
    Special Event Trigger (CCP) ..... 115
    TMR3H Register ..... 113
    TMR3L Register ..... 113
Timing Diagrams
        Bus Collision
            Transmit and Acknowledge ..... 159
    A/D Conversion ..... 287
    Acknowledge Sequence ..... 158
    Baud Rate Generator with Clock Arbitration ..... 152
    BRG Reset Due to SDA Arbitration During
        START Condition ..... 161
    Brown-out Reset (BOR) ..... 274
    Bus Collision
        Start Condition (SDA Only) ..... 160
    Bus Collision During a Repeated
        START Condition (Case 1) ..... 162
    Bus Collision During a Repeated
        START Condition (Case 2) ..... 162
    Bus Collision During a START Condition
        (SCL = 0) ..... 161
    Bus Collision During a STOP Condition
        (Case 1) ..... 163
    Bus Collision During a STOP Condition
        (Case 2) ..... 163
    Capture/Compare/PWM (CCP1 and CCP2) ..... 276
    CLKO and I/O ..... 272
    Clock Synchronization ..... 145

Example SPI Master Mode (CKE = 0) ..... 278
Example SPI Master Mode (CKE = 1) ..... 279
Example SPI Slave Mode (CKE = 0) ..... 280
Example SPI Slave Mode (CKE = 1) ..... 281
External Clock (All Modes except PLL) ..... 271
First START Bit Timing ..... 153
I$^2$C Bus Data ..... 282
I$^2$C Bus START/STOP Bits ..... 282
I$^2$C Master Mode (Reception, 7-bit Address) ..... 157
I$^2$C Master Mode (Transmission, 7 or 10-bit Address) ..... 156
I$^2$C Slave Mode Timing (10-bit Reception, SEN = 0) ..... 142
I$^2$C Slave Mode Timing (10-bit Transmission) ..... 143
I$^2$C Slave Mode Timing (7-bit Reception, SEN = 0) ..... 140
I$^2$C Slave Mode Timing (7-bit Reception, SEN = 1) ..... 146, 147
I$^2$C Slave Mode Timing (7-bit Transmission) ..... 141
Low Voltage Detect ..... 192
Master SSP I$^2$C Bus Data ..... 284
Master SSP I$^2$C Bus START/STOP Bits ..... 284
Parallel Slave Port (PIC18F4X2) ..... 277
Parallel Slave Port (Read) ..... 101
Parallel Slave Port (Write) ..... 100
PWM Output ..... 122
Repeat START Condition ..... 154
RESET, Watchdog Timer (WDT), Oscillator Start-up Timer (OST) and Power-up Timer (PWRT) ..... 273
Slave Synchronization ..... 131
Slaver Mode General Call Address Sequence (7 or 10-bit Address Mode) ..... 148
Slow Rise Time ($\overline{\text{MCLR}}$ Tied to VDD) ..... 33
SPI Mode (Master Mode) ..... 130
SPI Mode (Slave Mode with CKE = 0) ..... 132
SPI Mode (Slave Mode with CKE = 1) ..... 132
Stop Condition Receive or Transmit Mode ..... 158
Time-out Sequence on POR w/PLL Enabled ($\overline{\text{MCLR}}$ Tied to VDD) ..... 33
Time-out Sequence on Power-up ($\overline{\text{MCLR}}$ Not Tied to VDD)
Case 1 ..... 32
Case 2 ..... 32
Time-out Sequence on Power-up ($\overline{\text{MCLR}}$ Tied to VDD) ..... 32
Timer0 and Timer1 External Clock ..... 275
Timing for Transition Between Timer1 and OSC1 (HS with PLL) ..... 23
Transition Between Timer1 and OSC1 (HS, XT, LP) ..... 22
Transition Between Timer1 and OSC1 (RC, EC) ..... 23
Transition from OSC1 to Timer1 Oscillator ..... 22
USART Asynchronous Master Transmission ..... 173
USART Asynchronous Master Transmission (Back to Back) ..... 173
USART Asynchronous Reception ..... 175
USART Synchronous Receive (Master/Slave) ..... 286
USART Synchronous Reception (Master Mode, SREN) ..... 178
USART Synchronous Transmission ..... 177
USART Synchronous Transmission (Master/Slave) ..... 286
USART Synchronous Transmission (Through TXEN) ..... 177
Wake-up from SLEEP via Interrupt ..... 206
Timing Diagrams Requirements
Master SSP I$^2$C Bus START/STOP Bits ..... 284
Timing Requirements
A/D Conversion ..... 288
Capture/Compare/PWM (CCP1 and CCP2) ..... 276
CLKO and I/O ..... 273
Example SPI Mode (Master Mode, CKE = 0) ..... 278
Example SPI Mode (Master Mode, CKE = 1) ..... 279
Example SPI Mode (Slave Mode, CKE = 0) ..... 280
Example SPI Slave Mode (CKE = 1) ..... 281
External Clock ..... 271
I$^2$C Bus Data (Slave Mode) ..... 283
Master SSP I$^2$C Bus Data ..... 285
Parallel Slave Port (PIC18F4X2) ..... 277
RESET, Watchdog Timer, Oscillator Start-up Timer, Power-up Timer and Brown-out Reset Requirements ..... 274
Timer0 and Timer1 External Clock ..... 275
USART Synchronous Receive ..... 286
USART Synchronous Transmission ..... 286
Timing Specifications
PLL Clock ..... 272
TRISE Register
PSPMODE Bit ..... 95, 100
TSTFSZ ..... 251
Two-Word Instructions
Example Cases ..... 41
TXSTA Register
BRGH Bit ..... 168

## U

Universal Synchronous Asynchronous Receiver Transmitter. *See* USART
USART ..... 165
Asynchronous Mode ..... 172
Associated Registers, Receive ..... 175
Associated Registers, Transmit ..... 173
Receiver ..... 174
Transmitter ..... 172
Baud Rate Generator (BRG) ..... 168
Associated Registers ..... 168
Baud Rate Error, Calculating ..... 168
Baud Rate Formula ..... 168
Baud Rates for Asynchronous Mode (BRGH = 0) ..... 170
Baud Rates for Asynchronous Mode (BRGH = 1) ..... 171
Baud Rates for Synchronous Mode ..... 169
High Baud Rate Select (BRGH Bit) ..... 168
Sampling ..... 168
Serial Port Enable (SPEN Bit) ..... 165
Synchronous Master Mode ..... 176
Associated Registers, Reception ..... 178
Associated Registers, Transmit ..... 176
Reception ..... 178
Transmission ..... 176
Synchronous Slave Mode ..... 179
Associated Registers, Receive ..... 180
Associated Registers, Transmit ..... 179
Reception ..... 180
Transmission ..... 179


© 2006 Microchip Technology Inc.

## W

Wake-up from SLEEP ..... 195, 205
Using Interrupts ..... 205
Watchdog Timer (WDT) ..... 195, 203
Associated Registers ..... 204
Control Register ..... 203
Postscaler ..... 203, 204
Programming Considerations ..... 203
RC Oscillator ..... 203
Time-out Period ..... 203
WCOL ..... 153
WCOL Status Flag .....153, 155, 158
WWW, On-Line Support ..... 5

## X

XORLW ..... 251
XORWF ..... 252

**NOTES:**


© 2006 Microchip Technology Inc.

## THE MICROCHIP WEB SITE

Microchip provides online support via our WWW site at www.microchip.com. This web site is used as a means to make files and information easily available to customers. Accessible by using your favorite Internet browser, the web site contains the following information:

- **Product Support** – Data sheets and errata, application notes and sample programs, design resources, user's guides and hardware support documents, latest software releases and archived software
- **General Technical Support** – Frequently Asked Questions (FAQ), technical support requests, online discussion groups, Microchip consultant program member listing
- **Business of Microchip** – Product selector and ordering guides, latest Microchip press releases, listing of seminars and events, listings of Microchip sales offices, distributors and factory representatives

## CUSTOMER CHANGE NOTIFICATION SERVICE

Microchip's customer notification service helps keep customers current on Microchip products. Subscribers will receive e-mail notification whenever there are changes, updates, revisions or errata related to a specified product family or development tool of interest.

To register, access the Microchip web site at www.microchip.com, click on Customer Change Notification and follow the registration instructions.

## CUSTOMER SUPPORT

Users of Microchip products can receive assistance through several channels:

- Distributor or Representative
- Local Sales Office
- Field Application Engineer (FAE)
- Technical Support
- Development Systems Information Line

Customers should contact their distributor, representative or field application engineer (FAE) for support. Local sales offices are also available to help customers. A listing of sales offices and locations is included in the back of this document.

**Technical support is available through the web site at: http://support.microchip.com**

## READER RESPONSE

It is our intention to provide you with the best documentation possible to ensure successful use of your Microchip product. If you wish to provide your comments on organization, clarity, subject matter, and ways in which our documentation can better serve you, please FAX your comments to the Technical Publications Manager at (480) 792-4150.

Please list the following information, and use this outline to provide us with your comments about this document.

To: Technical Publications Manager  Total Pages Sent _____

RE: Reader Response

From: Name _____

Company _____

Address _____

City / State / ZIP / Country _____

Telephone: (_____) _____ - _____  FAX: (_____) _____ - _____

Application (optional):

Would you like a reply?____Y ____N

Device: PIC18FXX2  Literature Number: DS39564C

Questions:

1. What are the best features of this document?

_____

_____

2. How does this document meet your hardware and software development needs?

_____

_____

3. Do you find the organization of this document easy to follow? If not, why?

_____

_____

4. What additions to the document do you think would enhance the structure and subject?

_____

_____

5. What deletions from the document could be made without affecting the overall usefulness?

_____

_____

6. Is there any incorrect or misleading information (what and where)?

_____

_____

7. How would you improve this document?

_____

_____

 © 2006 Microchip Technology Inc.

## PIC18FXX2 PRODUCT IDENTIFICATION SYSTEM

To order or obtain information, e.g., on pricing or delivery, refer to the factory or the listed sales office.

| PART NO. | – | X | /XX | XXX |
|---|---|---|---|---|
| Device | | Temperature Range | Package | Pattern |

| | |
|---|---|
| Device | PIC18FXX2(1), PIC18FXX2T(2); VDD range 4.2V to 5.5V<br>PIC18LFXX2(1), PIC18LFXX2T(2); VDD range 2.5V to 5.5V |
| Temperature Range | I = -40°C to +85°C (Industrial)<br>E = -40°C to +125°C (Extended) |
| Package | PT = TQFP (Thin Quad Flatpack)<br>SO = SOIC<br>SP = Skinny Plastic DIP<br>P = PDIP<br>L = PLCC |
| Pattern | QTP, SQTP, Code or Special Requirements (blank otherwise) |

**Examples:**

a) PIC18LF452 - I/P 301 = Industrial temp., PDIP package, Extended VDD limits, QTP pattern #301.

b) PIC18LF242 - I/SO = Industrial temp., SOIC package, Extended VDD limits.

c) PIC18F442 - E/P = Extended temp., PDIP package, normal VDD limits.

**Note 1:** F = Standard Voltage range
LF = Wide Voltage Range

**2:** T = in tape and reel - SOIC, PLCC, and TQFP packages only.

# WORLDWIDE SALES AND SERVICE

## AMERICAS

**Corporate Office**
2355 West Chandler Blvd.
Chandler, AZ 85224-6199
Tel: 480-792-7200
Fax: 480-792-7277
Technical Support:
http://support.microchip.com
Web Address:
www.microchip.com

**Atlanta**
Alpharetta, GA
Tel: 770-640-0034
Fax: 770-640-0307

**Boston**
Westborough, MA
Tel: 774-760-0087
Fax: 774-760-0088

**Chicago**
Itasca, IL
Tel: 630-285-0071
Fax: 630-285-0075

**Dallas**
Addison, TX
Tel: 972-818-7423
Fax: 972-818-2924

**Detroit**
Farmington Hills, MI
Tel: 248-538-2250
Fax: 248-538-2260

**Kokomo**
Kokomo, IN
Tel: 765-864-8360
Fax: 765-864-8387

**Los Angeles**
Mission Viejo, CA
Tel: 949-462-9523
Fax: 949-462-9608

**Santa Clara**
Santa Clara, CA
Tel: 408-961-6444
Fax: 408-961-6445

**Toronto**
Mississauga, Ontario,
Canada
Tel: 905-673-0699
Fax: 905-673-6509

## ASIA/PACIFIC

**Asia Pacific Office**
Suites 3707-14, 37th Floor
Tower 6, The Gateway
Habour City, Kowloon
Hong Kong
Tel: 852-2401-1200
Fax: 852-2401-3431

**Australia - Sydney**
Tel: 61-2-9868-6733
Fax: 61-2-9868-6755

**China - Beijing**
Tel: 86-10-8528-2100
Fax: 86-10-8528-2104

**China - Chengdu**
Tel: 86-28-8665-5511
Fax: 86-28-8665-7889

**China - Fuzhou**
Tel: 86-591-8750-3506
Fax: 86-591-8750-3521

**China - Hong Kong SAR**
Tel: 852-2401-1200
Fax: 852-2401-3431

**China - Qingdao**
Tel: 86-532-8502-7355
Fax: 86-532-8502-7205

**China - Shanghai**
Tel: 86-21-5407-5533
Fax: 86-21-5407-5066

**China - Shenyang**
Tel: 86-24-2334-2829
Fax: 86-24-2334-2393

**China - Shenzhen**
Tel: 86-755-8203-2660
Fax: 86-755-8203-1760

**China - Shunde**
Tel: 86-757-2839-5507
Fax: 86-757-2839-5571

**China - Wuhan**
Tel: 86-27-5980-5300
Fax: 86-27-5980-5118

**China - Xian**
Tel: 86-29-8833-7250
Fax: 86-29-8833-7256

## ASIA/PACIFIC

**India - Bangalore**
Tel: 91-80-4182-8400
Fax: 91-80-4182-8422

**India - New Delhi**
Tel: 91-11-4160-8631
Fax: 91-11-4160-8632

**India - Pune**
Tel: 91-20-2566-1512
Fax: 91-20-2566-1513

**Japan - Yokohama**
Tel: 81-45-471- 6166
Fax: 81-45-471-6122

**Korea - Gumi**
Tel: 82-54-473-4301
Fax: 82-54-473-4302

**Korea - Seoul**
Tel: 82-2-554-7200
Fax: 82-2-558-5932 or
82-2-558-5934

**Malaysia - Penang**
Tel: 60-4-646-8870
Fax: 60-4-646-5086

**Philippines - Manila**
Tel: 63-2-634-9065
Fax: 63-2-634-9069

**Singapore**
Tel: 65-6334-8870
Fax: 65-6334-8850

**Taiwan - Hsin Chu**
Tel: 886-3-572-9526
Fax: 886-3-572-6459

**Taiwan - Kaohsiung**
Tel: 886-7-536-4818
Fax: 886-7-536-4803

**Taiwan - Taipei**
Tel: 886-2-2500-6610
Fax: 886-2-2508-0102

**Thailand - Bangkok**
Tel: 66-2-694-1351
Fax: 66-2-694-1350

## EUROPE

**Austria - Wels**
Tel: 43-7242-2244-3910
Fax: 43-7242-2244-393

**Denmark - Copenhagen**
Tel: 45-4450-2828
Fax: 45-4485-2829

**France - Paris**
Tel: 33-1-69-53-63-20
Fax: 33-1-69-30-90-79

**Germany - Munich**
Tel: 49-89-627-144-0
Fax: 49-89-627-144-44

**Italy - Milan**
Tel: 39-0331-742611
Fax: 39-0331-466781

**Netherlands - Drunen**
Tel: 31-416-690399
Fax: 31-416-690340

**Spain - Madrid**
Tel: 34-91-708-08-90
Fax: 34-91-708-08-91

**UK - Wokingham**
Tel: 44-118-921-5869
Fax: 44-118-921-5820

08/29/06


© 2006 Microchip Technology Inc.

Компания «ЭлектроПласт» предлагает заключение долгосрочных отношений при поставках импортных электронных компонентов на взаимовыгодных условиях!

Наши преимущества:

- Оперативные поставки широкого спектра электронных компонентов отечественного и импортного производства напрямую от производителей и с крупнейших мировых складов;
- Поставка более 17-ти миллионов наименований электронных компонентов;
- Поставка сложных, дефицитных, либо снятых с производства позиций;
- Оперативные сроки поставки под заказ (от 5 рабочих дней);
- Экспресс доставка в любую точку России;
- Техническая поддержка проекта, помощь в подборе аналогов, поставка прототипов;
- Система менеджмента качества сертифицирована по Международному стандарту ISO 9001;
- Лицензия ФСБ на осуществление работ с использованием сведений, составляющих государственную тайну;
- Поставка специализированных компонентов (Xilinx, Altera, Analog Devices, Intersil, Interpoint, Microsemi, Aeroflex, Peregrine, Syfer, Eurofarad, Texas Instrument, Miteq, Cobham, E2V, MA-COM, Hittite, Mini-Circuits,General Dynamics и др.);

Помимо этого, одним из направлений компании «ЭлектроПласт» является направление «Источники питания». Мы предлагаем Вам помощь Конструкторского отдела:

- Подбор оптимального решения, техническое обоснование при выборе компонента;
- Подбор аналогов;
- Консультации по применению компонента;
- Поставка образцов и прототипов;
- Техническая поддержка проекта;
- Защита от снятия компонента с производства.

**Как с нами связаться**

**Телефон:** 8 (812) 309 58 32 (многоканальный)
**Факс:** 8 (812) 320-02-42
**Электронная почта:** org@eplast1.ru
**Адрес:** 198099, г. Санкт-Петербург, ул. Калинина, дом 2, корпус 4, литера А.