COSEL DC-DC Converters PCB Mount type

SUCS1R5

Ordering information

SUC S 1R5 12 05 B P -□

① ② ③ ④ ⑤ ⑥ ⑦ ⑧

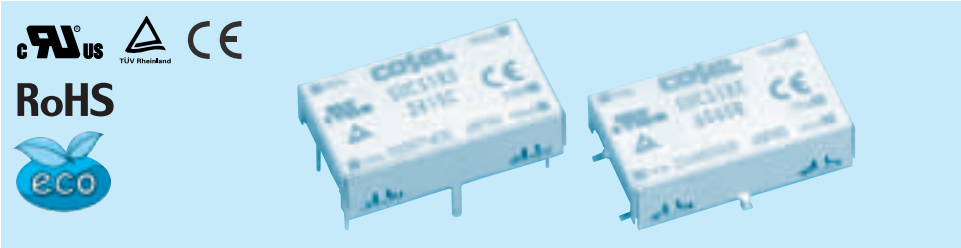

①Series name
②Single output
③Output wattage
④Input voltage
⑤Output voltage
⑥Mounting type
B :SMD
C :DIP
⑦Packing form
Blank:Plastic cover
P :Tray (SMD type)
⑧Optional
C :with coating (only DIP type)*

*Safety standards are pending

MODEL		SUCS1R5053R3	SUCS1R50505	SUCS1R50512	SUCS1R50515	SUCS1R5123R3	SUCS1R51205	SUCS1R51212	SUCS1R51215
MAX OUTPUT WATTAGE[W]		1.32	1.5	1.56	1.5	1.32	1.5	1.56	1.5
DC OUTPUT	VOLTAGE[V] *1	3.3	5	12	15	3.3	5	12	15
	CURRENT[A]	0.4	0.3	0.13	0.1	0.4	0.3	0.13	0.1

SPECIFICATIONS

	MODEL		SUCS1R5053R3	SUCS1R50505	SUCS1R50512	SUCS1R50515	SUCS1R5123R3	SUCS1R51205	SUCS1R51212	SUCS1R51215
INPUT	VOLTAGE[V]		DC4.5 - 9				DC9 - 18			
	CURRENT[A]	*2	0.388typ	0.417typ	0.433typ	0.417typ	0.157typ	0.169typ	0.176typ	0.169typ
	EFFICIENCY[%]	*2	68typ	72typ	72typ	72typ	70typ	74typ	74typ	74typ
OUTPUT	VOLTAGE[V]		3.3	5	12	15	3.3	5	12	15
	CURRENT[A]		0.4	0.3	0.13	0.1	0.4	0.3	0.13	0.1
	LINE REGULATION[mV]		20max	20max	48max	60max	20max	20max	48max	60max
	LOAD REGULATION[mV]		40max	40max	100max	120max	40max	40max	100max	120max
	RIPPLE[mVp-p]	-20 to +55℃ *3	80max	80max	120max	120max	80max	80max	120max	120max
		-40 to -20℃ *3	120max	120max	150max	150max	120max	120max	150max	150max
	RIPPLE NOISE[mVp-p]	-20 to +55℃ *3	120max	120max	150max	150max	120max	120max	150max	150max
		-40 to -20℃ *3	200max	200max	200max	200max	200max	200max	200max	200max
	TEMPERATURE REGULATION[mV]	-20 to +55℃	50max	50max	150max	180max	50max	50max	150max	180max
		-40 to +55℃	80max	80max	240max	290max	80max	80max	240max	290max
	DRIFT[mV]	*4	20max	20max	48max	60max	20max	20max	48max	60max
	START-UP TIME[ms]		20max (Minimum input, Io=100%)							
	OUTPUT VOLTAGE ADJUSTMENT RANGE		Fixed (TRM pin open) ±5% adjustable by external VR							
	OUTPUT VOLTAGE SETTING[V] (±3%)		3.21 - 3.42	4.90 - 5.21	11.64 - 12.36	14.55 - 15.45	3.21 - 3.42	4.90 - 5.21	11.64 - 12.36	14.55 - 15.45
PROTECTION CIRCUIT AND OTHERS	OVERCURRENT PROTECTION		Works over 105% of rating and recovers automatically							

MODEL		SUCS1R5243R3	SUCS1R52405	SUCS1R52412	SUCS1R52415	SUCS1R5483R3	SUCS1R54805	SUCS1R54812	SUCS1R54815
MAX OUTPUT WATTAGE[W]		1.32	1.5	1.56	1.5	1.32	1.5	1.56	1.5
DC OUTPUT	VOLTAGE[V] *1	3.3	5	12	15	3.3	5	12	15
	CURRENT[A]	0.4	0.3	0.13	0.1	0.4	0.3	0.13	0.1

SPECIFICATIONS

	MODEL		SUCS1R5243R3	SUCS1R52405	SUCS1R52412	SUCS1R52415	SUCS1R5483R3	SUCS1R54805	SUCS1R54812	SUCS1R54815
INPUT	VOLTAGE[V]		DC18 - 36				DC36 - 76			
	CURRENT[A]	*2	0.079typ	0.084typ	0.087typ	0.083typ	0.039typ	0.042typ	0.043typ	0.042typ
	EFFICIENCY[%]	*2	70typ	74typ	75typ	75typ	70typ	74typ	75typ	75typ
OUTPUT	VOLTAGE[V]		3.3	5	12	15	3.3	5	12	15
	CURRENT[A]		0.4	0.3	0.13	0.1	0.4	0.3	0.13	0.1
	LINE REGULATION[mV]		20max	20max	48max	60max	20max	20max	48max	60max
	LOAD REGULATION[mV]		40max	40max	100max	120max	40max	40max	100max	120max
	RIPPLE[mVp-p]	-20 to +55℃ *3	80max	80max	120max	120max	80max	80max	120max	120max
		-40 to -20℃ *3	120max	120max	150max	150max	120max	120max	150max	150max
	RIPPLE NOISE[mVp-p]	-20 to +55℃ *3	120max	120max	150max	150max	120max	120max	150max	150max
		-40 to -20℃ *3	200max	200max	200max	200max	200max	200max	200max	200max
	TEMPERATURE REGULATION[mV]	-20 to +55℃	50max	50max	150max	180max	50max	50max	150max	180max
		-40 to +55℃	80max	80max	240max	290max	80max	80max	240max	290max
	DRIFT[mV]	*4	20max	20max	48max	60max	20max	20max	48max	60max
	START-UP TIME[ms]		20max (Minimum input, Io=100%)							
	OUTPUT VOLTAGE ADJUSTMENT RANGE		Fixed (TRM pin open) ±5% adjustable by external VR							
	OUTPUT VOLTAGE SETTING[V] (±3%)		3.21 - 3.42	4.90 - 5.21	11.64 - 12.36	14.55 - 15.45	3.21 - 3.42	4.90 - 5.21	11.64 - 12.36	14.55 - 15.45
PROTECTION CIRCUIT AND OTHERS	OVERCURRENT PROTECTION		Works over 105% of rating and recovers automatically							

GENERAL SPECIFICATIONS

ISOLATION	INPUT-OUTPUT	AC500V 1minute, Cutoff current = 10mA, DC500V 50MΩ min (20±15℃)
	INPUT-CASE	AC500V 1minute, Cutoff current = 10mA, DC500V 50MΩ min (20±15℃)
	OUTPUT-CASE	AC500V 1minute, Cutoff current = 10mA, DC500V 50MΩ min (20±15℃)
ENVIRONMENT	OPERATING TEMP.,HUMID.AND ALTITUDE	-40 to +85℃, 20 - 95%RH (Non condensing) (Required Derating), 3,000m (10,000feet) max
	STORAGE TEMP.,HUMID.AND ALTITUDE	-40 to +100℃, 20 - 95%RH (Non condensing), 9,000m (30,000feet) max
	VIBRATION	10 - 55Hz, 98.0m/s² (10G), 3minutes period, 60minutes each along X, Y and Z axis
	IMPACT	490.3m/s² (50G), 11ms, once each along X, Y and Z axis
SAFETY	AGENCY APPROVALS	UL60950-1, C-UL, EN60950-1
OTHERS	CASE SIZE/WEIGHT	22.4×7.0×13.2mm [0.88×0.28×0.52 inches] (W×H×D) / 3g max
	COOLING METHOD	Convection/Forced air

*1 SUCW1R5xx12/SUCW1R5xx15 is available as single output, +24V/+30V.
*2 Rated input 5V, 12V, 24V or 48V DC Io=100%
*3 Ripple and Ripple Noise is measured by using measuring board with capacitor with in 25mm from output pin terminals.
*4 Drift is the change in DC output for an eight hour period after a half-hour warm-up at 25℃.
* Parallel operation with other model is not possible.

External view

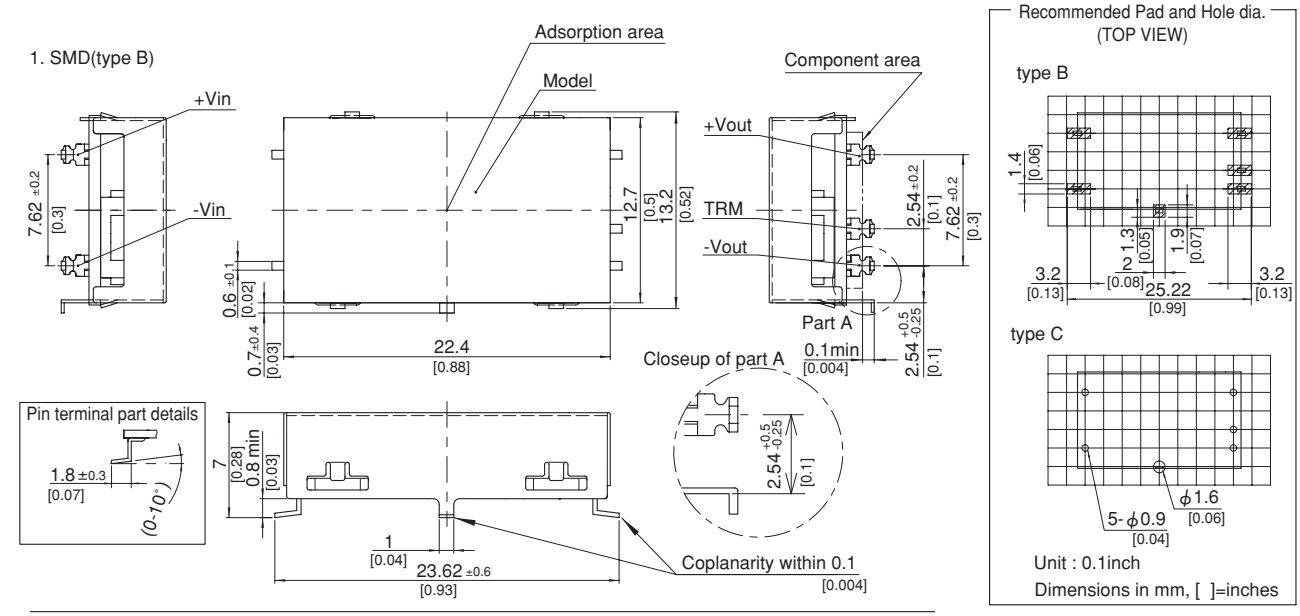

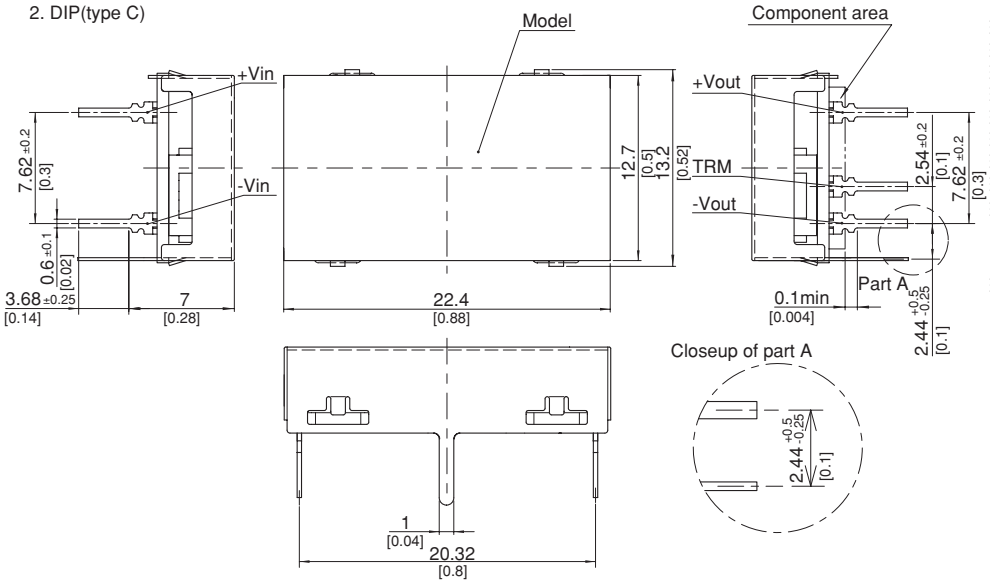

※ Tolerance ±0.5 [±0.02]
※ Dimensions in mm, [ ]=inches
※ Pin terminal thickness : 0.3±0.1 [0.012]
※ Pin terminal material : Copper alloy
※ Plating treatment of terminal : Lead free plating
※ Case thickness : 0.2±0.05 [0.008]
※ Case material : Brass
※ Plating treatment of case : Nickel plating
※ Please keep enough creepage distance with the pattern on PCB and other components.
※ Weight : 3g max

COSEL DC-DC Converters PCB Mount type

SUCS3

Ordering information

SUC S 3 12 05 B P -□

① ② ③ ④ ⑤ ⑥ ⑦ ⑧

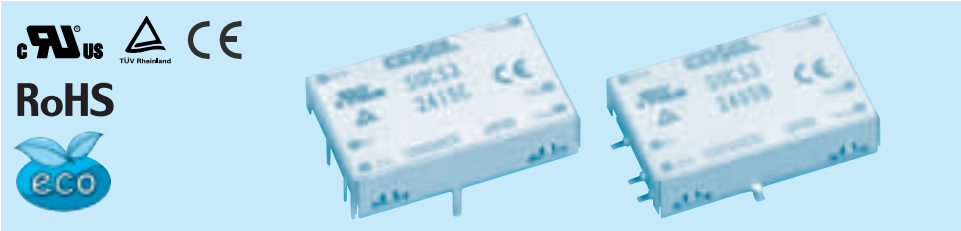

①Series name
②Single output
③Output wattage
④Input voltage
⑤Output voltage
⑥Mounting type
B :SMD
C :DIP
⑦Packing form
Blank:Plastic cover
P :Tray (SMD type)
⑧Optional
G :Capacitor between Input and Output is removed.
C :with coating (only DIP type)*

* Safety standards are pending

MODEL		SUCS3053R3	SUCS30505	SUCS30512	SUCS30515	SUCS3123R3	SUCS31205	SUCS31212	SUCS31215
MAX OUTPUT WATTAGE[W]		1.98	3	3	3	1.98	3	3	3
DC OUTPUT	VOLTAGE[V] *1	3.3	5	12	15	3.3	5	12	15
	CURRENT[A]	0.6	0.6	0.25	0.2	0.6	0.6	0.25	0.2

SPECIFICATIONS

	MODEL		SUCS3053R3	SUCS30505	SUCS30512	SUCS30515	SUCS3123R3	SUCS31205	SUCS31212	SUCS31215
INPUT	VOLTAGE[V]		DC4.5 - 9				DC9 - 18			
	CURRENT[A]	*2	0.550typ	0.800typ	0.780typ	0.780typ	0.223typ	0.325typ	0.317typ	0.321typ
	EFFICIENCY[%]	*2	72typ	75typ	77typ	77typ	74typ	77typ	79typ	78typ
OUTPUT	VOLTAGE[V]		3.3	5	12	15	3.3	5	12	15
	CURRENT[A]		0.6	0.6	0.25	0.2	0.6	0.6	0.25	0.2
	LINE REGULATION[mV]		20max	20max	48max	60max	20max	20max	48max	60max
	LOAD REGULATION[mV]		40max	40max	100max	120max	40max	40max	100max	120max
	RIPPLE[mVp-p]	-20 to +55℃ *3	80max	80max	120max	120max	80max	80max	120max	120max
		-40 to -20℃ *3	120max	120max	150max	150max	120max	120max	150max	150max
	RIPPLE NOISE[mVp-p]	-20 to +55℃ *3	120max	120max	150max	150max	120max	120max	150max	150max
		-40 to -20℃ *3	200max	200max	200max	200max	200max	200max	200max	200max
	TEMPERATURE REGULATION[mV]	-20 to +55℃	50max	50max	150max	180max	50max	50max	150max	180max
		-40 to +55℃	80max	80max	240max	290max	80max	80max	240max	290max
	DRIFT[mV]	*4	20max	20max	48max	60max	20max	20max	48max	60max
	START-UP TIME[ms]		20max (Minimum input, Io=100%)							
	OUTPUT VOLTAGE ADJUSTMENT RANGE		Fixed (TRM pin open) ±5% adjustable by external VR							
	OUTPUT VOLTAGE SETTING[V] (±3%)		3.21 - 3.42	4.90 - 5.21	11.64 - 12.36	14.55 - 15.45	3.21 - 3.42	4.90 - 5.21	11.64 - 12.36	14.55 - 15.45
PROTECTION CIRCUIT AND OTHERS	OVERCURRENT PROTECTION		Works over 105% of rating and recovers automatically							
	REMOTE ON/OFF		Provided (Negative logic L : ON, H : OFF)							

MODEL		SUCS3243R3	SUCS32405	SUCS32412	SUCS32415	SUCS3483R3	SUCS34805	SUCS34812	SUCS34815
MAX OUTPUT WATTAGE[W]		1.98	3	3	3	1.98	3	3	3
DC OUTPUT	VOLTAGE[V] *1	3.3	5	12	15	3.3	5	12	15
	CURRENT[A]	0.6	0.6	0.25	0.2	0.6	0.6	0.25	0.2

SU·SUC/SUT

SPECIFICATIONS

	MODEL		SUCS3243R3	SUCS32405	SUCS32412	SUCS32415	SUCS3483R3	SUCS34805	SUCS34812	SUCS34815
INPUT	VOLTAGE[V]		DC18 - 36				DC36 - 76			
	CURRENT[A]	*2	0.114typ	0.163typ	0.159typ	0.161typ	0.057typ	0.082typ	0.080typ	0.080typ
	EFFICIENCY[%]	*2	73typ	77typ	79typ	78typ	72typ	77typ	79typ	79typ
OUTPUT	VOLTAGE[V]		3.3	5	12	15	3.3	5	12	15
	CURRENT[A]		0.6	0.6	0.25	0.2	0.6	0.6	0.25	0.2
	LINE REGULATION[mV]		20max	20max	48max	60max	20max	20max	48max	60max
	LOAD REGULATION[mV]		40max	40max	100max	120max	40max	40max	100max	120max
	RIPPLE[mVp-p]	-20 to +55℃ *3	80max	80max	120max	120max	80max	80max	120max	120max
		-40 to -20℃ *3	120max	120max	150max	150max	120max	120max	150max	150max
	RIPPLE NOISE[mVp-p]	-20 to +55℃ *3	120max	120max	150max	150max	120max	120max	150max	150max
		-40 to -20℃ *3	200max	200max	200max	200max	200max	200max	200max	200max
	TEMPERATURE REGULATION[mV]	-20 to +55℃	50max	50max	150max	180max	50max	50max	150max	180max
		-40 to +55℃	80max	80max	240max	290max	80max	80max	240max	290max
	DRIFT[mV]	*4	20max	20max	48max	60max	20max	20max	48max	60max
	START-UP TIME[ms]		20max (Minimum input, Io=100%)							
	OUTPUT VOLTAGE ADJUSTMENT RANGE		Fixed (TRM pin open) ±5% adjustable by external VR							
	OUTPUT VOLTAGE SETTING[V] (±3%)		3.21 - 3.42	4.90 - 5.21	11.64 - 12.36	14.55 - 15.45	3.21 - 3.42	4.90 - 5.21	11.64 - 12.36	14.55 - 15.45
PROTECTION CIRCUIT AND OTHERS	OVERCURRENT PROTECTION		Works over 105% of rating and recovers automatically							
	REMOTE ON/OFF		Provided (Negative logic L : ON, H : OFF)							

GENERAL SPECIFICATIONS

ISOLATION	INPUT-OUTPUT	AC500V 1minute, Cutoff current = 10mA, DC500V 50MΩ min (20±15℃)
	INPUT-CASE	AC500V 1minute, Cutoff current = 10mA, DC500V 50MΩ min (20±15℃)
	OUTPUT-CASE	AC500V 1minute, Cutoff current = 10mA, DC500V 50MΩ min (20±15℃)
ENVIRONMENT	OPERATING TEMP.,HUMID.AND ALTITUDE	-40 to +85℃, 20 - 95%RH (Non condensing) (Required Derating), 3,000m (10,000feet) max
	STORAGE TEMP.,HUMID.AND ALTITUDE	-40 to +100℃, 20 - 95%RH (Non condensing), 9,000m (30,000feet) max
	VIBRATION	10 - 55Hz, 98.0m/s² (10G), 3minutes period, 60minutes each along X, Y and Z axis
	IMPACT	490.3m/s² (50G), 11ms, once each along X, Y and Z axis
SAFETY	AGENCY APPROVALS	UL60950-1, C-UL, EN60950-1
OTHERS	CASE SIZE/WEIGHT	25×7.0×16.1mm [0.98×0.28×0.63 inches] (W×H×D) / 5g max
	COOLING METHOD	Convection/Forced air

*1 SUCW3xx12/SUCW3xx15 is available as single output, +24V/+30V.
*2 Rated input 5V, 12V, 24V or 48V DC Io=100%
*3 Ripple and Ripple Noise is measured by using measuring board with capacitor with in 25mm from output pin terminals.
*4 Drift is the change in DC output for an eight hour period after a half-hour warm-up at 25℃.
* Parallel operation with other model is not possible.

External view

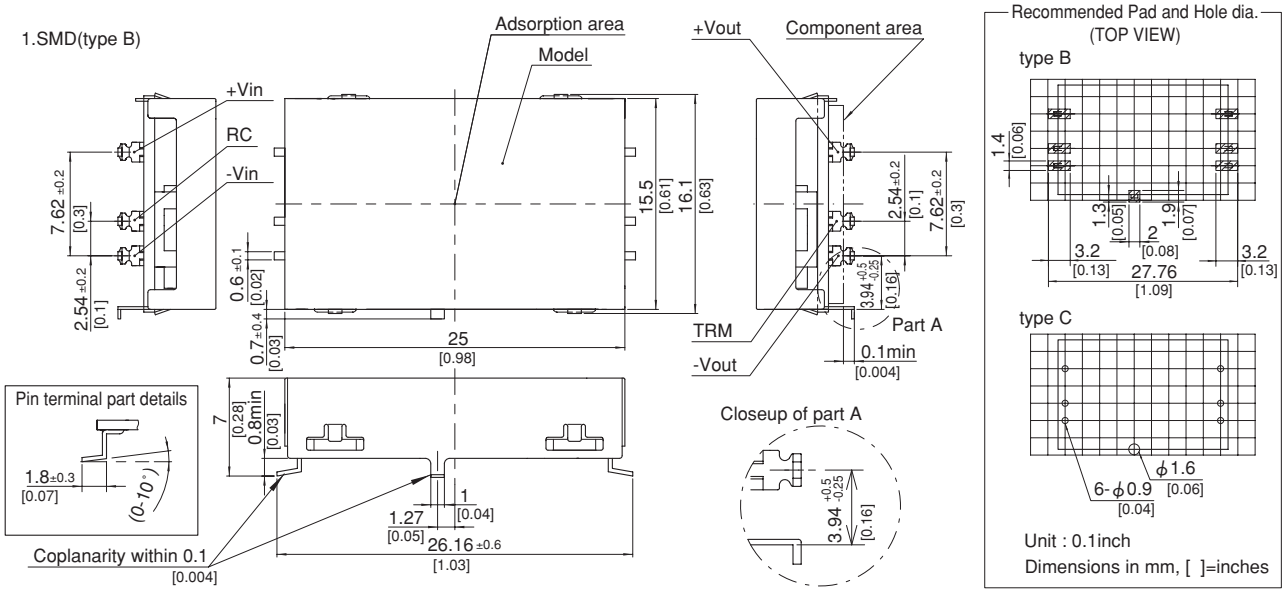

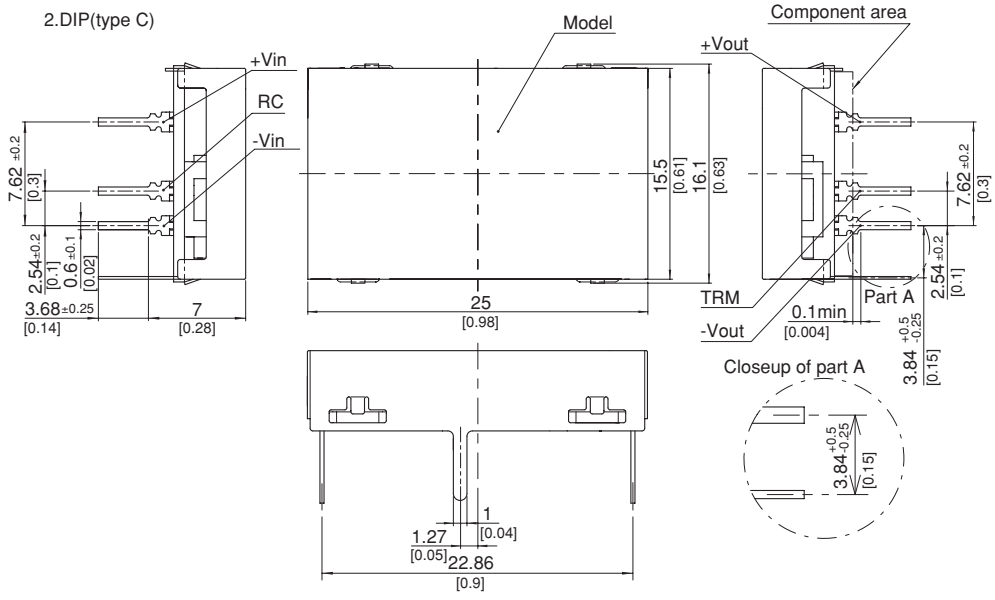

※ Tolerance ±0.5 [±0.02]
※ Dimensions in mm, [ ]=inches
※ Pin terminal thickness : 0.3±0.1 [0.012]
※ Pin terminal material : Copper alloy
※ Plating treatment of terminal : Lead free plating
※ Case thickness : 0.2±0.05 [0.008]
※ Case material : Brass
※ Plating treatment of case : Nickel plating
※ Please keep enough creepage distance with the pattern on PCB and other components.
※ Weight : 5g max

COSEL DC-DC Converters PCB Mount type

SUCS6

Ordering information

SUC	S	6	12	05	B	P	-□
①	②	③	④	⑤	⑥	⑦	⑧

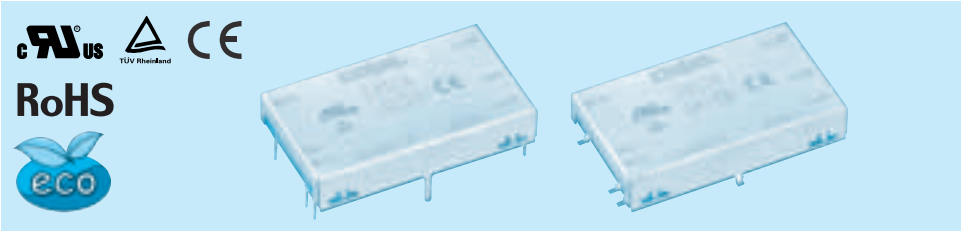

①Series name
②Single output
③Output wattage
④Input voltage
⑤Output voltage
⑥Mounting type
B :SMD
C :DIP
⑦Packing form
Blank:Plastic cover
P :Tray (SMD type)
⑧Optional
G :Capacitor between Input and Output is removed.
C :with coating (only DIP type)*

* Safety standards are pending

MODEL		SUCS6053R3	SUCS60505	SUCS60512	SUCS60515	SUCS6123R3	SUCS61205	SUCS61212	SUCS61215
MAX OUTPUT WATTAGE[W]		3.96	5	6	6	4.46	6	6	6
DC OUTPUT	VOLTAGE[V] *1	3.3	5	12	15	3.3	5	12	15
	CURRENT[A]	1.2	1	0.5	0.4	1.35	1.2	0.5	0.4

SPECIFICATIONS

	MODEL		SUCS6053R3	SUCS60505	SUCS60512	SUCS60515	SUCS6123R3	SUCS61205	SUCS61212	SUCS61215
INPUT	VOLTAGE[V]		DC4.5 - 9				DC9 - 18			
	CURRENT[A]	*2	1.100typ	1.316typ	1.500typ	1.500typ	0.502typ	0.617typ	0.588typ	0.588typ
	EFFICIENCY[%]	*2	72typ	76typ	80typ	80typ	74typ	81typ	85typ	85typ
OUTPUT	VOLTAGE[V]		3.3	5	12	15	3.3	5	12	15
	CURRENT[A]		1.2	1	0.5	0.4	1.35	1.2	0.5	0.4
	LINE REGULATION[mV]		20max	20max	48max	60max	20max	20max	48max	60max
	LOAD REGULATION[mV]		40max	40max	100max	120max	40max	40max	100max	120max
	RIPPLE[mVp-p]	-20 to +55℃ *3	80max	80max	120max	120max	80max	80max	120max	120max
		-40 to -20℃ *3	120max	120max	150max	150max	120max	120max	150max	150max
	RIPPLE NOISE[mVp-p]	-20 to +55℃ *3	120max	120max	150max	150max	120max	120max	150max	150max
		-40 to -20℃ *3	200max	200max	200max	200max	200max	200max	200max	200max
	TEMPERATURE REGULATION[mV]	-20 to +55℃	50max	50max	150max	180max	50max	50max	150max	180max
		-40 to +55℃	80max	80max	240max	290max	80max	80max	240max	290max
	DRIFT[mV]	*4	20max	20max	48max	60max	20max	20max	48max	60max
	START-UP TIME[ms]		20max (Minimum input, Io=100%)							
	OUTPUT VOLTAGE ADJUSTMENT RANGE		Fixed (TRM pin open) ±5% adjustable by external VR							
	OUTPUT VOLTAGE SETTING[V] (±3%)		3.21 - 3.42	4.90 - 5.21	11.64 - 12.36	14.55 - 15.45	3.21 - 3.42	4.90 - 5.21	11.64 - 12.36	14.55 - 15.45
PROTECTION CIRCUIT AND OTHERS	OVERCURRENT PROTECTION		Works over 105% of rating and recovers automatically							
	REMOTE ON/OFF		Provided (Negative logic L : ON, H : OFF)							

MODEL		SUCS6243R3	SUCS62405	SUCS62412	SUCS62415	SUCS6483R3	SUCS64805	SUCS64812	SUCS64815
MAX OUTPUT WATTAGE[W]		4.46	6	6	6	4.46	6	6	6
DC OUTPUT	VOLTAGE[V] *1	3.3	5	12	15	3.3	5	12	15
	CURRENT[A]	1.35	1.2	0.5	0.4	1.35	1.2	0.5	0.4

SPECIFICATIONS

	MODEL		SUCS6243R3	SUCS62405	SUCS62412	SUCS62415	SUCS6483R3	SUCS64805	SUCS64812	SUCS64815
INPUT	VOLTAGE[V]		DC18 - 36				DC36 - 76			
	CURRENT[A]	*2	0.248typ	0.309typ	0.291typ	0.291typ	0.121typ	0.154typ	0.145typ	0.145typ
	EFFICIENCY[%]	*2	75typ	81typ	86typ	86typ	77typ	81typ	86typ	86typ
OUTPUT	VOLTAGE[V]		3.3	5	12	15	3.3	5	12	15
	CURRENT[A]		1.35	1.2	0.5	0.4	1.35	1.2	0.5	0.4
	LINE REGULATION[mV]		20max	20max	48max	60max	20max	20max	48max	60max
	LOAD REGULATION[mV]		40max	40max	100max	120max	40max	40max	100max	120max
	RIPPLE[mVp-p]	-20 to +55℃ *3	80max	80max	120max	120max	80max	80max	120max	120max
		-40 to -20℃ *3	120max	120max	150max	150max	120max	120max	150max	150max
	RIPPLE NOISE[mVp-p]	-20 to +55℃ *3	120max	120max	150max	150max	120max	120max	150max	150max
		-40 to -20℃ *3	200max	200max	200max	200max	200max	200max	200max	200max
	TEMPERATURE REGULATION[mV]	-20 to +55℃	50max	50max	150max	180max	50max	50max	150max	180max
		-40 to +55℃	80max	80max	240max	290max	80max	80max	240max	290max
	DRIFT[mV]	*4	20max	20max	48max	60max	20max	20max	48max	60max
	START-UP TIME[ms]		20max (Minimum input, Io=100%)							
	OUTPUT VOLTAGE ADJUSTMENT RANGE		Fixed (TRM pin open) ±5% adjustable by external VR							
	OUTPUT VOLTAGE SETTING[V] (±3%)		3.21 - 3.42	4.90 - 5.21	11.64 - 12.36	14.55 - 15.45	3.21 - 3.42	4.90 - 5.21	11.64 - 12.36	14.55 - 15.45
PROTECTION CIRCUIT AND OTHERS	OVERCURRENT PROTECTION		Works over 105% of rating and recovers automatically							
	REMOTE ON/OFF		Provided (Negative logic L : ON, H : OFF)							

GENERAL SPECIFICATIONS

ISOLATION	INPUT-OUTPUT	AC500V 1minute, Cutoff current = 10mA, DC500V 50MΩ min (20±15℃)
	INPUT-CASE	AC500V 1minute, Cutoff current = 10mA, DC500V 50MΩ min (20±15℃)
	OUTPUT-CASE	AC500V 1minute, Cutoff current = 10mA, DC500V 50MΩ min (20±15℃)
ENVIRONMENT	OPERATING TEMP.,HUMID.AND ALTITUDE	-40 to +85℃, 20 - 95%RH (Non condensing) (Required Derating), 3,000m (10,000feet) max
	STORAGE TEMP.,HUMID.AND ALTITUDE	-40 to +100℃, 20 - 95%RH (Non condensing), 9,000m (30,000feet) max
	VIBRATION	10 - 55Hz, 98.0m/s² (10G), 3minutes period, 60minutes each along X, Y and Z axis
	IMPACT	490.3m/s² (50G), 11ms, once each along X, Y and Z axis
SAFETY	AGENCY APPROVALS	UL60950-1, C-UL, EN60950-1
OTHERS	CASE SIZE/WEIGHT	32.6×7.0×19.1mm [1.28×0.28×0.75 inches] (W×H×D) / 7g max
	COOLING METHOD	Convection/Forced air

*1 SUCW6xx12/SUCW6xx15 is available as single output, +24V/+30V.
*2 Rated input 5V, 12V, 24V or 48V DC Io=100%
*3 Ripple and Ripple Noise is measured by using measuring board with capacitor with in 25mm from output pin terminals.
*4 Drift is the change in DC output for an eight hour period after a half-hour warm-up at 25℃.
* Parallel operation with other model is not possible.

External view

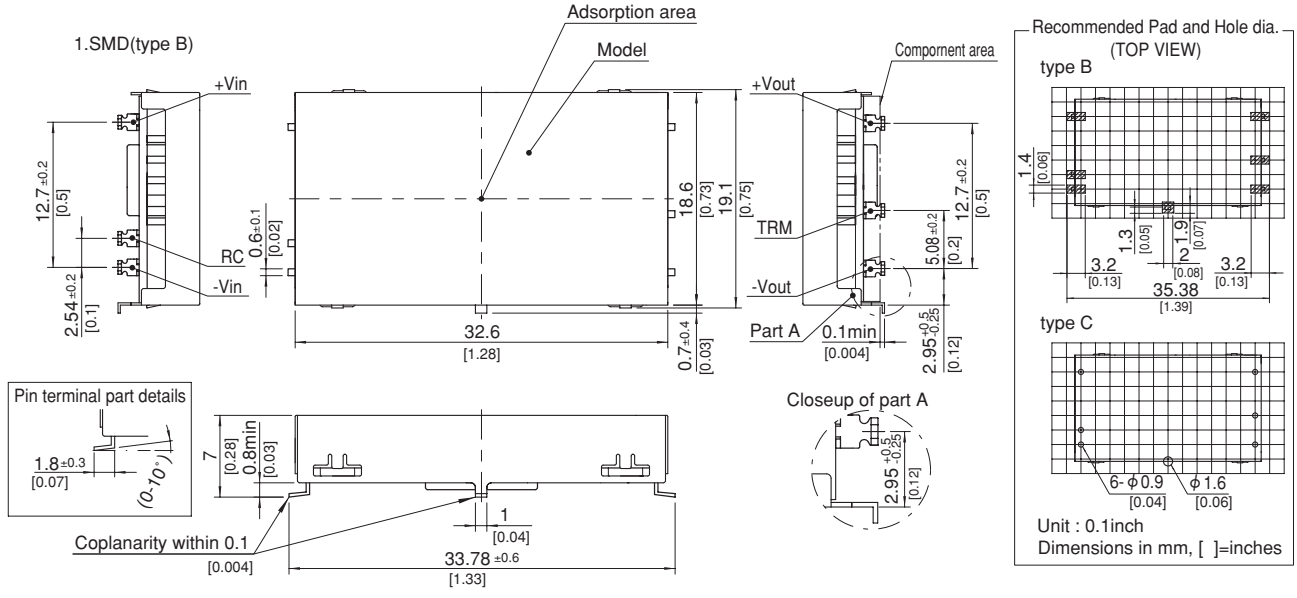

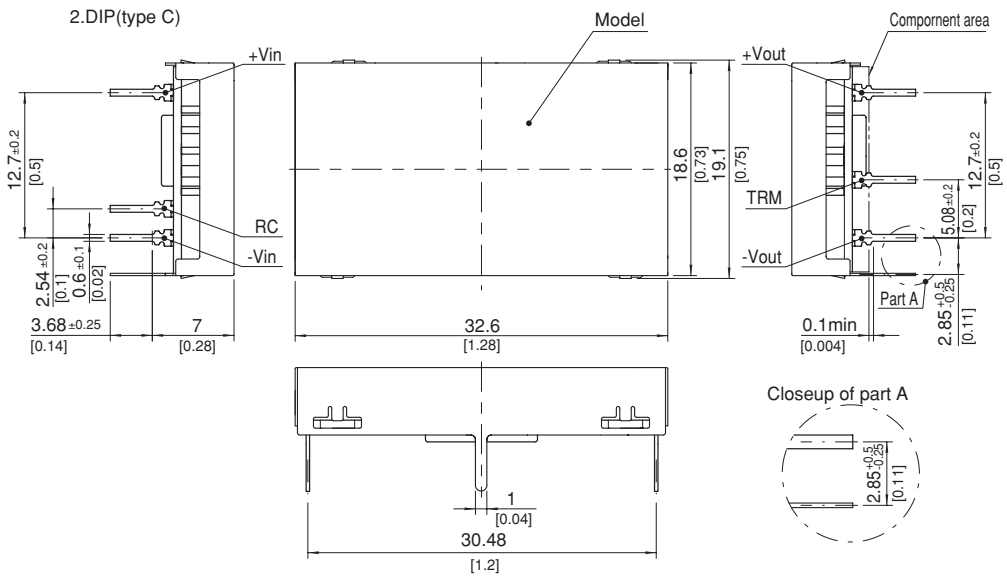

※ Tolerance ±0.5 [±0.02]
※ Dimensions in mm, [ ]=inches
※ Pin terminal thickness : 0.3±0.1 [0.012]
※ Pin terminal material : Copper alloy
※ Plating treatment of terminal : Lead free plating
※ Case thickness : 0.2±0.05 [0.008]
※ Case material : Brass
※ Plating treatment of case : Nickel plating
※ Please keep enough creepage distance with the pattern on PCB and other components.
※ Weight : 7g max

COSEL DC-DC Converters PCB Mount type

SUCS10

Ordering information

SUC S 10 12 05 B P -□

① ② ③ ④ ⑤ ⑥ ⑦ ⑧

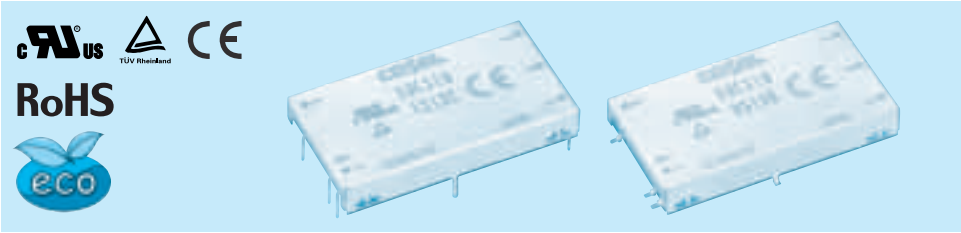

①Series name
②Single output
③Output wattage
④Input voltage
⑤Output voltage
⑥Mounting type
B :SMD
C :DIP
⑦Packing form
Blank:Plastic cover
P :Tray (SMD type)
⑧Optional
G :Capacitor between Input and Output is removed.
C :with coating (only DIP type)*

* Safety standards are pending

MODEL		SUCS10053R3	SUCS100505	SUCS100512	SUCS100515	SUCS10123R3	SUCS101205	SUCS101212	SUCS101215
MAX OUTPUT WATTAGE[W]		8.58	10	10.8	10.5	8.58	10	12	12
DC OUTPUT	VOLTAGE[V] *1	3.3	5	12	15	3.3	5	12	15
	CURRENT[A]	2.6	2	0.9	0.7	2.6	2	1	0.8

SPECIFICATIONS

	MODEL		SUCS10053R3	SUCS100505	SUCS100512	SUCS100515	SUCS10123R3	SUCS101205	SUCS101212	SUCS101215
INPUT	VOLTAGE[V]		DC4.5 - 9				DC9 - 18			
	CURRENT[A]	*2	2.12typ	2.41typ	2.54typ	2.47typ	0.872typ	0.980typ	1.15typ	1.15typ
	EFFICIENCY[%]	*2	81typ	83typ	85typ	85typ	82typ	85typ	87typ	87typ
OUTPUT	VOLTAGE[V]		3.3	5	12	15	3.3	5	12	15
	CURRENT[A]		2.6	2	0.9	0.7	2.6	2	1	0.8
	LINE REGULATION[mV]		20max	20max	48max	60max	20max	20max	48max	60max
	LOAD REGULATION[mV]		40max	40max	100max	120max	40max	40max	100max	120max
	RIPPLE[mVp-p]	-20 to +55℃ *3	80max	80max	120max	120max	80max	80max	120max	120max
		-40 to -20℃ *3	120max	120max	150max	150max	120max	120max	150max	150max
	RIPPLE NOISE[mVp-p]	-20 to +55℃ *3	120max	120max	150max	150max	120max	120max	150max	150max
		-40 to -20℃ *3	200max	200max	200max	200max	200max	200max	200max	200max
	TEMPERATURE REGULATION[mV]	-20 to +55℃	50max	50max	150max	180max	50max	50max	150max	180max
		-40 to +55℃	80max	80max	240max	290max	80max	80max	240max	290max
	DRIFT[mV]	*4	20max	20max	48max	60max	20max	20max	48max	60max
	START-UP TIME[ms]		20max (Minimum input, Io=100%)							
	OUTPUT VOLTAGE ADJUSTMENT RANGE		Fixed (TRM pin open) ±5% adjustable by external VR							
	OUTPUT VOLTAGE SETTING[V] (±3%)		3.21 - 3.42	4.90 - 5.21	11.64 - 12.36	14.55 - 15.45	3.21 - 3.42	4.90 - 5.21	11.64 - 12.36	14.55 - 15.45
PROTECTION CIRCUIT AND OTHERS	OVERCURRENT PROTECTION		Works over 105% of rating and recovers automatically							
	REMOTE ON/OFF		Provided (Negative logic L : ON, H : OFF)							

MODEL		SUCS10243R3	SUCS102405	SUCS102412	SUCS102415	SUCS10483R3	SUCS104805	SUCS104812	SUCS104815
MAX OUTPUT WATTAGE[W]		8.58	10	12	12	8.58	10	12	12
DC OUTPUT	VOLTAGE[V] *1	3.3	5	12	15	3.3	5	12	15
	CURRENT[A]	2.6	2	1	0.8	2.6	2	1	0.8

SU-SUC/SUT

SPECIFICATIONS

	MODEL		SUCS10243R3	SUCS102405	SUCS102412	SUCS102415	SUCS10483R3	SUCS104805	SUCS104812	SUCS104815
INPUT	VOLTAGE[V]		DC18 - 36				DC36 - 76			
	CURRENT[A]	*2	0.436typ	0.490typ	0.575typ	0.575typ	0.218typ	0.245typ	0.287typ	0.287typ
	EFFICIENCY[%]	*2	82typ	85typ	87typ	87typ	82typ	85typ	87typ	87typ
OUTPUT	VOLTAGE[V]		3.3	5	12	15	3.3	5	12	15
	CURRENT[A]		2.6	2	1	0.8	2.6	2	1	0.8
	LINE REGULATION[mV]		20max	20max	48max	60max	20max	20max	48max	60max
	LOAD REGULATION[mV]		40max	40max	100max	120max	40max	40max	100max	120max
	RIPPLE[mVp-p]	-20 to +55℃ *3	80max	80max	120max	120max	80max	80max	120max	120max
		-40 to -20℃ *3	120max	120max	150max	150max	120max	120max	150max	150max
	RIPPLE NOISE[mVp-p]	-20 to +55℃ *3	120max	120max	150max	150max	120max	120max	150max	150max
		-40 to -20℃ *3	200max	200max	200max	200max	200max	200max	200max	200max
	TEMPERATURE REGULATION[mV]	-20 to +55℃	50max	50max	150max	180max	50max	50max	150max	180max
		-40 to +55℃	80max	80max	240max	290max	80max	80max	240max	290max
	DRIFT[mV]	*4	20max	20max	48max	60max	20max	20max	48max	60max
	START-UP TIME[ms]		20max (Minimum input, Io=100%)							
	OUTPUT VOLTAGE ADJUSTMENT RANGE		Fixed (TRM pin open) ±5% adjustable by external VR							
	OUTPUT VOLTAGE SETTING[V] (±3%)		3.21 - 3.42	4.90 - 5.21	11.64 - 12.36	14.55 - 15.45	3.21 - 3.42	4.90 - 5.21	11.64 - 12.36	14.55 - 15.45
PROTECTION CIRCUIT AND OTHERS	OVERCURRENT PROTECTION		Works over 105% of rating and recovers automatically							
	REMOTE ON/OFF		Provided (Negative logic L : ON, H : OFF)							

GENERAL SPECIFICATIONS

ISOLATION	INPUT-OUTPUT	AC500V 1minute, Cutoff current = 10mA, DC500V 50MΩ min (20±15℃)
	INPUT-CASE	AC500V 1minute, Cutoff current = 10mA, DC500V 50MΩ min (20±15℃)
	OUTPUT-CASE	AC500V 1minute, Cutoff current = 10mA, DC500V 50MΩ min (20±15℃)
ENVIRONMENT	OPERATING TEMP.,HUMID.AND ALTITUDE	-40 to +85℃, 20 - 95%RH (Non condensing) (Required Derating), 3,000m (10,000feet) max
	STORAGE TEMP.,HUMID.AND ALTITUDE	-40 to +100℃, 20 - 95%RH (Non condensing), 9,000m (30,000feet) max
	VIBRATION	10 - 55Hz, 98.0m/s² (10G), 3minutes period, 60minutes each along X, Y and Z axis
	IMPACT	490.3m/s² (50G), 11ms, once each along X, Y and Z axis
SAFETY	AGENCY APPROVALS	UL60950-1, C-UL, EN60950-1
OTHERS	CASE SIZE/WEIGHT	40.2×7.0×22.0mm [1.58×0.28×0.87 inches] (W×H×D) / 10g max
	COOLING METHOD	Convection/Forced air

*1 SUCW10xx12/SUCW10xx15 is available as single output, +24V/+30V.
*2 Rated input 5V, 12V, 24V or 48V DC Io=100%
*3 Ripple and Ripple Noise is measured by using measuring board with capacitor with in 25mm from output pin terminals.
*4 Drift is the change in DC output for an eight hour period after a half-hour warm-up at 25℃.
* Parallel operation with other model is not possible.

External view

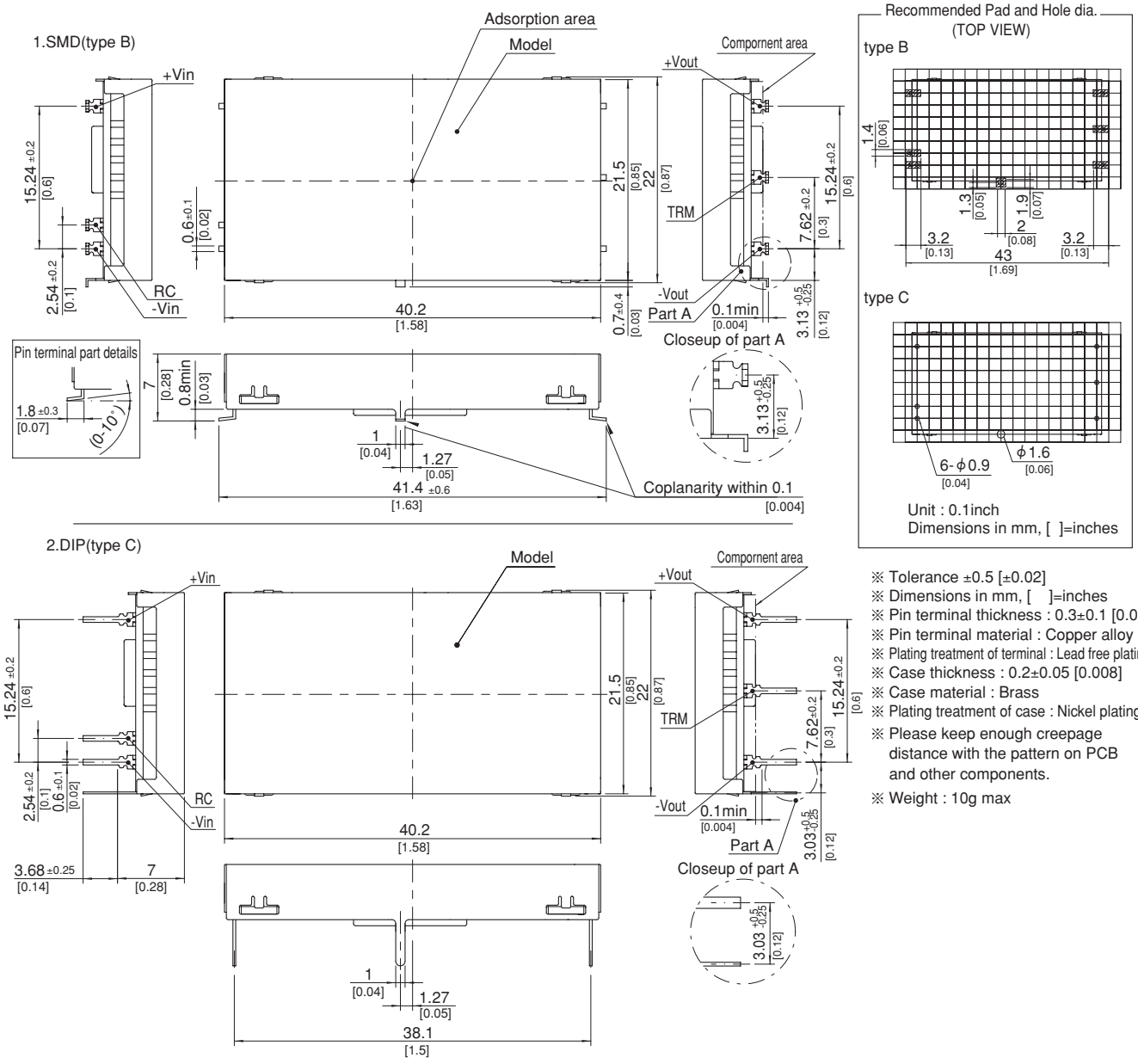

※ Tolerance ±0.5 [±0.02]
※ Dimensions in mm, [ ]=inches
※ Pin terminal thickness : 0.3±0.1 [0.012]
※ Pin terminal material : Copper alloy
※ Plating treatment of terminal : Lead free plating
※ Case thickness : 0.2±0.05 [0.008]
※ Case material : Brass
※ Plating treatment of case : Nickel plating
※ Please keep enough creepage distance with the pattern on PCB and other components.
※ Weight : 10g max

Mouser Electronics

Authorized Distributor

Click to View Pricing, Inventory, Delivery & Lifecycle Information:

Cosel:

SUCS102415C SUCS6483R3BP SUCS32415C SUCS30512C-G SUCS1R50512B SUCS32412C SUCS100515B SUCS1R51212C-C SUCS64815C SUCS62415C-C SUCS1R5243R3C SUCS101215C-C SUCS32412B-G SUCS1R52405BP SUCS6123R3C-C SUCS102415B-G SUCS34805C-C SUCS31212C-G SUCS6053R3C-G SUCS1R54812BP SUCS102412B-G SUCS60512C SUCS101205BP SUCS1R5053R3C SUCS1R54815B SUCS3243R3B SUCS64805BP SUCS104805B SUCS102405C-C SUCS61212C-G SUCS32415B SUCS64812C-C SUCS62412BP SUCS31215BP SUCS61215C SUCS101212B SUCS102412C SUCS31205C SUCS3483R3BP SUCS30505C SUCS100505C SUCS1R51215C SUCS101212C-C SUCS1R54815C-C SUCS6243R3B-G SUCS6243R3C SUCS1R50512C-C SUCS1R54805BP SUCS32405BP SUCS62405BP SUCS61205BP SUCS60505B SUCS32405C-C SUCS1R51205BP SUCS10243R3B SUCS101205B-G SUCS31205B SUCS30515C SUCS10483R3BP SUCS100515C-C SUCS64812B SUCS3053R3BP SUCS1R52405B SUCS60515C-G SUCS102415B SUCS1R52415C SUCS31212C-C SUCS3243R3C-G SUCS62405C-C SUCS34815BP SUCS30512B SUCS64815BP SUCS101215C SUCS6053R3C SUCS1R51205B SUCS104815BP SUCS60512BP SUCS3243R3BP-G SUCS1R52412B SUCS61212C-C SUCS62412C SUCS64805C-C SUCS62415C SUCS104805C-C SUCS10483R3B SUCS102405B-G SUCS1R54812B SUCS104812C SUCS3483R3C-C SUCS30505B SUCS1R5483R3C SUCS1R5053R3BP SUCS32415C-G SUCS101205C-C SUCS31205BP-G SUCS1R5243R3BP SUCS10123R3BP SUCS100515C SUCS6483R3B SUCS6243R3B

Компания «ЭлектроПласт» предлагает заключение долгосрочных отношений при поставках импортных электронных компонентов на взаимовыгодных условиях!

Наши преимущества:

- Оперативные поставки широкого спектра электронных компонентов отечественного и импортного производства напрямую от производителей и с крупнейших мировых складов;
- Поставка более 17-ти миллионов наименований электронных компонентов;
- Поставка сложных, дефицитных, либо снятых с производства позиций;
- Оперативные сроки поставки под заказ (от 5 рабочих дней);
- Экспресс доставка в любую точку России;
- Техническая поддержка проекта, помощь в подборе аналогов, поставка прототипов;
- Система менеджмента качества сертифицирована по Международному стандарту ISO 9001;
- Лицензия ФСБ на осуществление работ с использованием сведений, составляющих государственную тайну;
- Поставка специализированных компонентов (Xilinx, Altera, Analog Devices, Intersil, Interpoint, Microsemi, Aeroflex, Peregrine, Syfer, Eurofarad, Texas Instrument, Miteq, Cobham, E2V, MA-COM, Hittite, Mini-Circuits,General Dynamics и др.);

Помимо этого, одним из направлений компании «ЭлектроПласт» является направление «Источники питания». Мы предлагаем Вам помощь Конструкторского отдела:

- Подбор оптимального решения, техническое обоснование при выборе компонента;
- Подбор аналогов;
- Консультации по применению компонента;
- Поставка образцов и прототипов;
- Техническая поддержка проекта;
- Защита от снятия компонента с производства.

Как с нами связаться

Телефон: 8 (812) 309 58 32 (многоканальный)
Факс: 8 (812) 320-02-42
Электронная почта: org@eplast1.ru
Адрес: 198099, г. Санкт-Петербург, ул. Калинина, дом 2, корпус 4, литера А.