Features

- High Performance, Low Power AVR® 8-Bit Microcontroller
- Advanced RISC Architecture
  - 120 Powerful Instructions – Most Single Clock Cycle Execution
  - 32 x 8 General Purpose Working Registers
  - Fully Static Operation
  - Up to 20 MIPS Througput at 20 MHz
- High Endurance Non-volatile Memory segments
  - 1K Bytes of In-System Self-programmable Flash program memory
  - 64 Bytes EEPROM
  - 64 Bytes Internal SRAM
  - Write/Erase Cycles: 10,000 Flash/100,000 EEPROM
  - Data retention: 20 Years at 85°C/100 Years at 25°C (see page 6)
  - Programming Lock for Self-Programming Flash & EEPROM Data Security
- Peripheral Features
  - One 8-bit Timer/Counter with Prescaler and Two PWM Channels
  - 4-channel, 10-bit ADC with Internal Voltage Reference
  - Programmable Watchdog Timer with Separate On-chip Oscillator
  - On-chip Analog Comparator
- Special Microcontroller Features
  - debugWIRE On-chip Debug System
  - In-System Programmable via SPI Port
  - External and Internal Interrupt Sources
  - Low Power Idle, ADC Noise Reduction, and Power-down Modes
  - Enhanced Power-on Reset Circuit
  - Programmable Brown-out Detection Circuit with Software Disable Function
  - Internal Calibrated Oscillator
- I/O and Packages
  - 8-pin PDIP/SOIC: Six Programmable I/O Lines
  - 10-pad MLF: Six Programmable I/O Lines
  - 20-pad MLF: Six Programmable I/O Lines
- Operating Voltage:
  - 1.8 – 5.5V
- Speed Grade:
  - 0 – 4 MHz @ 1.8 – 5.5V
  - 0 – 10 MHz @ 2.7 – 5.5V
  - 0 – 20 MHz @ 4.5 – 5.5V
- Industrial Temperature Range
- Low Power Consumption
  - Active Mode:
    - 190 µA at 1.8 V and 1 MHz
  - Idle Mode:
    - 24 µA at 1.8 V and 1 MHz

8-bit AVR® Microcontroller with 1K Bytes In-System Programmable Flash

ATtiny13A

Rev. 8126F–AVR–05/12

1. Pin Configurations

Figure 1-1. Pinout of ATtiny13A

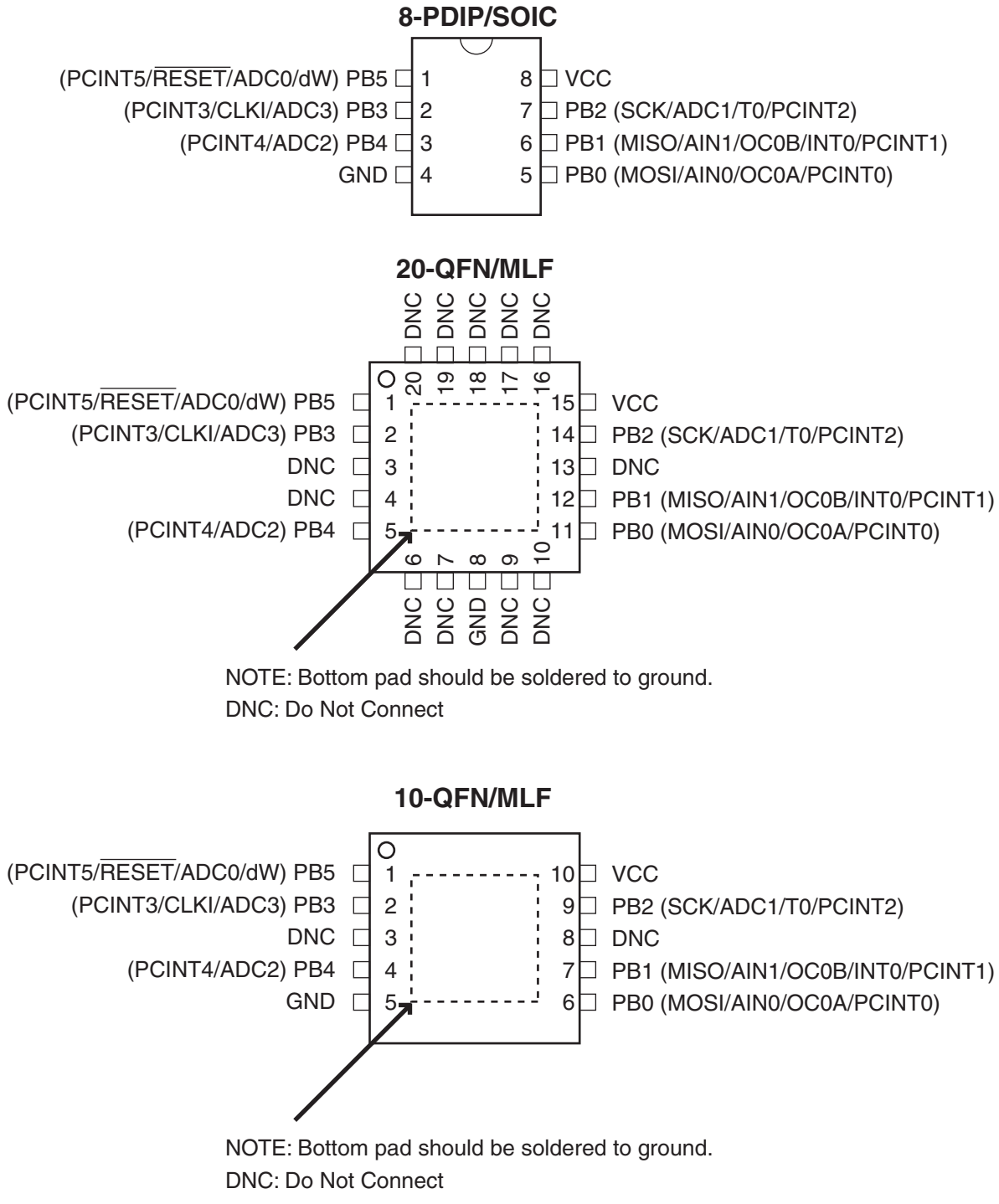

1.1 Pin Description

1.1.1 VCC

Supply voltage.

1.1.2 GND

Ground.

1.1.3 Port B (PB5:PB0)

Port B is a 6-bit bi-directional I/O port with internal pull-up resistors (selected for each bit). The Port B output buffers have symmetrical drive characteristics with both high sink and source capability. As inputs, Port B pins that are externally pulled low will source current if the pull-up resistors are activated. The Port B pins are tri-stated when a reset condition becomes active, even if the clock is not running.

Port B also serves the functions of various special features of the ATtiny13A as listed on page 55.

1.1.4 $\overline{\text{RESET}}$

Reset input. A low level on this pin for longer than the minimum pulse length will generate a reset, even if the clock is not running and provided the reset pin has not been disabled. The minimum pulse length is given in Table 18-4 on page 120. Shorter pulses are not guaranteed to generate a reset.

The reset pin can also be used as a (weak) I/O pin.

2. Overview

The ATtiny13A is a low-power CMOS 8-bit microcontroller based on the AVR enhanced RISC architecture. By executing powerful instructions in a single clock cycle, the ATtiny13A achieves throughputs approaching 1 MIPS per MHz allowing the system designer to optimize power consumption versus processing speed.

2.1 Block Diagram

Figure 2-1. Block Diagram

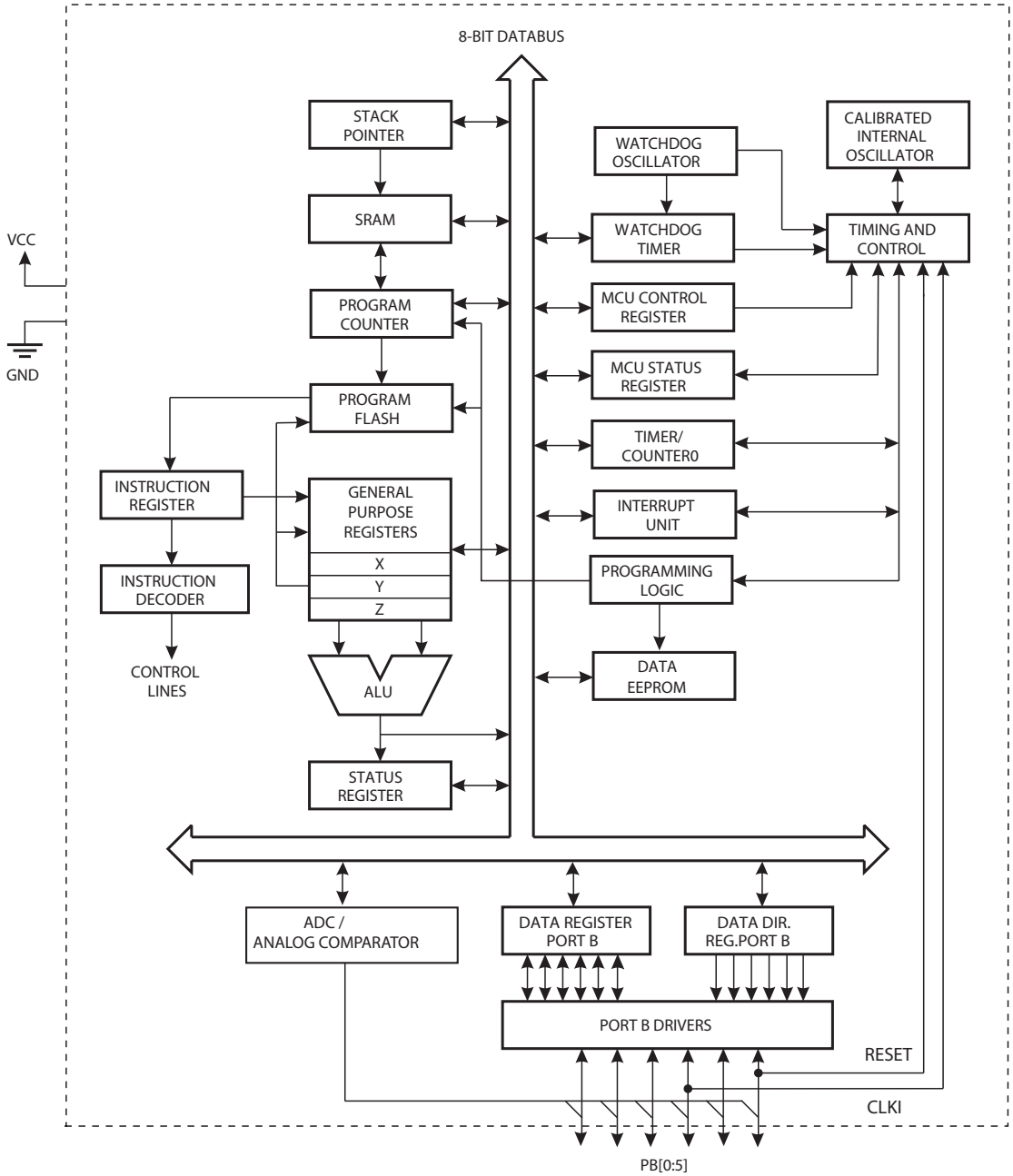

The AVR core combines a rich instruction set with 32 general purpose working registers. All 32 registers are directly connected to the Arithmetic Logic Unit (ALU), allowing two independent registers to be accessed in one single instruction executed in one clock cycle. The resulting architecture is more code efficient while achieving throughputs up to ten times faster than conventional CISC microcontrollers.

The ATtiny13A provides the following features: 1K byte of In-System Programmable Flash, 64 bytes EEPROM, 64 bytes SRAM, 6 general purpose I/O lines, 32 general purpose working registers, one 8-bit Timer/Counter with compare modes, Internal and External Interrupts, a 4-channel, 10-bit ADC, a programmable Watchdog Timer with internal Oscillator, and three software selectable power saving modes. The Idle mode stops the CPU while allowing the SRAM, Timer/Counter, ADC, Analog Comparator, and Interrupt system to continue functioning. The Power-down mode saves the register contents, disabling all chip functions until the next Interrupt or Hardware Reset. The ADC Noise Reduction mode stops the CPU and all I/O modules except ADC, to minimize switching noise during ADC conversions.

The device is manufactured using Atmel's high density non-volatile memory technology. The On-chip ISP Flash allows the Program memory to be re-programmed In-System through an SPI serial interface, by a conventional non-volatile memory programmer or by an On-chip boot code running on the AVR core.

The ATtiny13A AVR is supported with a full suite of program and system development tools including: C Compilers, Macro Assemblers, Program Debugger/Simulators, and Evaluation kits.

3. About

3.1 Resources

A comprehensive set of drivers, application notes, data sheets and descriptions on development tools are available for download at http://www.atmel.com/avr.

3.2 Code Examples

This documentation contains simple code examples that briefly show how to use various parts of the device. These code examples assume that the part specific header file is included before compilation. Be aware that not all C compiler vendors include bit definitions in the header files and interrupt handling in C is compiler dependent. Please confirm with the C compiler documentation for more details.

3.3 Data Retention

Reliability Qualification results show that the projected data retention failure rate is much less than 1 PPM over 20 years at 85°C or 100 years at 25°C.

4. CPU Core

This section discusses the AVR core architecture in general. The main function of the CPU core is to ensure correct program execution. The CPU must therefore be able to access memories, perform calculations, control peripherals, and handle interrupts.

4.1 Architectural Overview

Figure 4-1. Block Diagram of the AVR Architecture

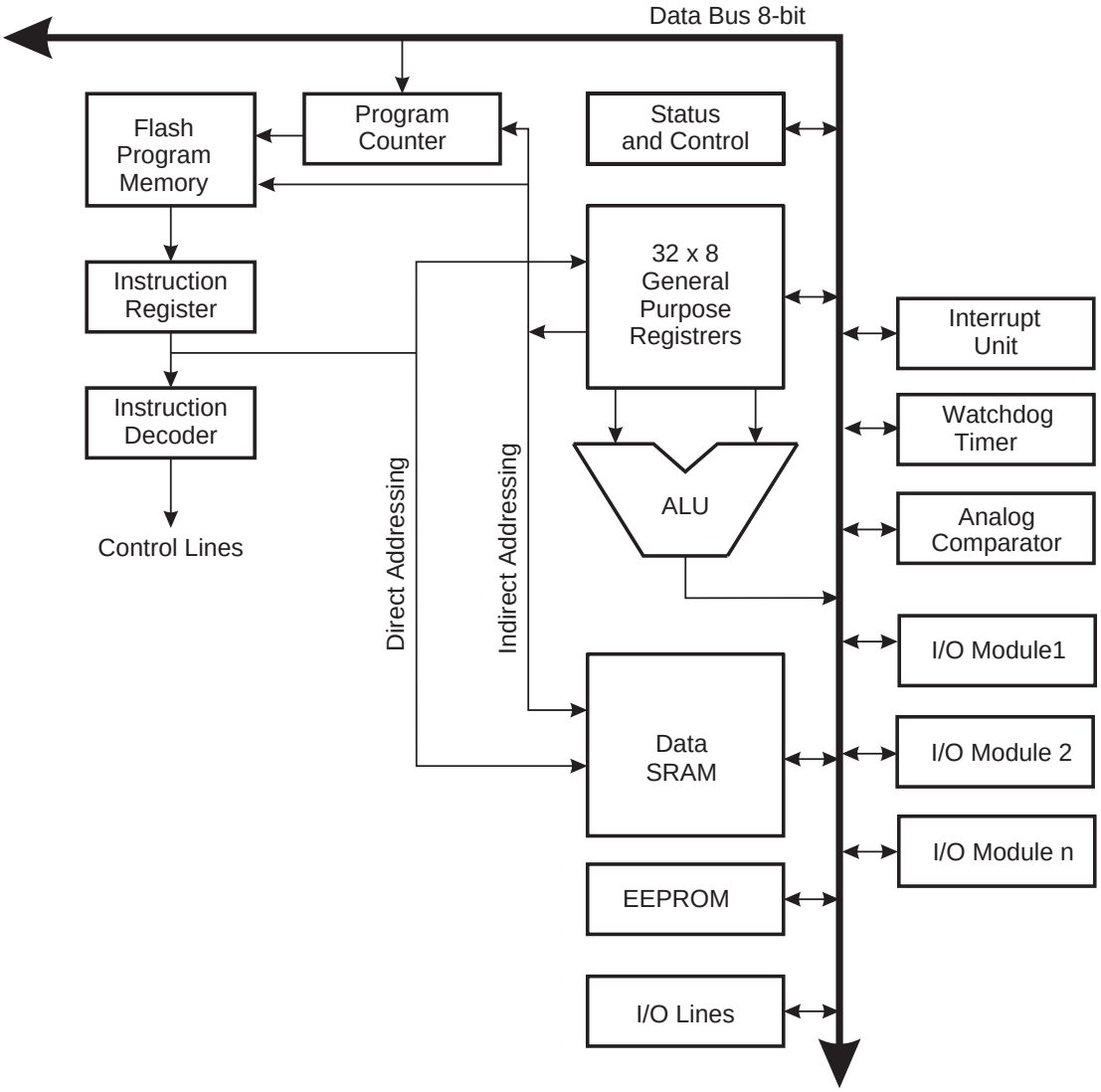

In order to maximize performance and parallelism, the AVR uses a Harvard architecture – with separate memories and buses for program and data. Instructions in the Program memory are executed with a single level pipelining. While one instruction is being executed, the next instruction is pre-fetched from the Program memory. This concept enables instructions to be executed in every clock cycle. The Program memory is In-System Reprogrammable Flash memory.

The fast-access Register File contains 32 x 8-bit general purpose working registers with a single clock cycle access time. This allows single-cycle Arithmetic Logic Unit (ALU) operation. In a typical ALU operation, two operands are output from the Register File, the operation is executed, and the result is stored back in the Register File – in one clock cycle.

Six of the 32 registers can be used as three 16-bit indirect address register pointers for Data Space addressing – enabling efficient address calculations. One of the these address pointers can also be used as an address pointer for look up tables in Flash Program memory. These added function registers are the 16-bit X-, Y-, and Z-register, described later in this section.

The ALU supports arithmetic and logic operations between registers or between a constant and a register. Single register operations can also be executed in the ALU. After an arithmetic operation, the Status Register is updated to reflect information about the result of the operation.

Program flow is provided by conditional and unconditional jump and call instructions, able to directly address the whole address space. Most AVR instructions have a single 16-bit word format. Every Program memory address contains a 16- or 32-bit instruction.

During interrupts and subroutine calls, the return address Program Counter (PC) is stored on the Stack. The Stack is effectively allocated in the general data SRAM, and consequently the Stack size is only limited by the total SRAM size and the usage of the SRAM. All user programs must initialize the SP in the Reset routine (before subroutines or interrupts are executed). The Stack Pointer (SP) is read/write accessible in the I/O space. The data SRAM can easily be accessed through the five different addressing modes supported in the AVR architecture.

The memory spaces in the AVR architecture are all linear and regular memory maps.

A flexible interrupt module has its control registers in the I/O space with an additional Global Interrupt Enable bit in the Status Register. All interrupts have a separate Interrupt Vector in the Interrupt Vector table. The interrupts have priority in accordance with their Interrupt Vector position. The lower the Interrupt Vector address, the higher the priority.

The I/O memory space contains 64 addresses for CPU peripheral functions as Control Registers, SPI, and other I/O functions. The I/O memory can be accessed directly, or as the Data Space locations following those of the Register File, 0x20 - 0x5F.

4.2 ALU – Arithmetic Logic Unit

The high-performance AVR ALU operates in direct connection with all the 32 general purpose working registers. Within a single clock cycle, arithmetic operations between general purpose registers or between a register and an immediate are executed. The ALU operations are divided into three main categories – arithmetic, logical, and bit-functions. Some implementations of the architecture also provide a powerful multiplier supporting both signed/unsigned multiplication and fractional format. See the “Instruction Set” section for a detailed description.

4.3 Status Register

The Status Register contains information about the result of the most recently executed arithmetic instruction. This information can be used for altering program flow in order to perform conditional operations. Note that the Status Register is updated after all ALU operations, as specified in the Instruction Set Reference. This will in many cases remove the need for using the dedicated compare instructions, resulting in faster and more compact code.

The Status Register is not automatically stored when entering an interrupt routine and restored when returning from an interrupt. This must be handled by software.

4.3.1 SREG – Status Register

Bit	7	6	5	4	3	2	1	0	
0x3F	I	T	H	S	V	N	Z	C	SREG
Read/Write	R/W	R/W	R/W	R/W	R/W	R/W	R/W	R/W	
Initial Value	0	0	0	0	0	0	0	0	

- **Bit 7 – I: Global Interrupt Enable**

The Global Interrupt Enable bit must be set for the interrupts to be enabled. The individual interrupt enable control is then performed in separate control registers. If the Global Interrupt Enable Register is cleared, none of the interrupts are enabled independent of the individual interrupt enable settings. The I-bit is cleared by hardware after an interrupt has occurred, and is set by the RETI instruction to enable subsequent interrupts. The I-bit can also be set and cleared by the application with the SEI and CLI instructions, as described in the instruction set reference.

- **Bit 6 – T: Bit Copy Storage**

The Bit Copy instructions BLD (Bit LoaD) and BST (Bit STore) use the T-bit as source or destination for the operated bit. A bit from a register in the Register File can be copied into T by the BST instruction, and a bit in T can be copied into a bit in a register in the Register File by the BLD instruction.

- **Bit 5 – H: Half Carry Flag**

The Half Carry Flag H indicates a Half Carry in some arithmetic operations. Half Carry is useful in BCD arithmetic. See the “Instruction Set Description” for detailed information.

- **Bit 4 – S: Sign Bit, S = N $\oplus$ V**

The S-bit is always an exclusive or between the Negative Flag N and the Two’s Complement Overflow Flag V. See the “Instruction Set Description” for detailed information.

- **Bit 3 – V: Two’s Complement Overflow Flag**

The Two’s Complement Overflow Flag V supports two’s complement arithmetics. See the “Instruction Set Description” for detailed information.

- **Bit 2 – N: Negative Flag**

The Negative Flag N indicates a negative result in an arithmetic or logic operation. See the “Instruction Set Description” for detailed information.

- **Bit 1 – Z: Zero Flag**

The Zero Flag Z indicates a zero result in an arithmetic or logic operation. See the “Instruction Set Description” for detailed information.

- **Bit 0 – C: Carry Flag**

The Carry Flag C indicates a carry in an arithmetic or logic operation. See the “Instruction Set Description” for detailed information.

4.4 General Purpose Register File

The Register File is optimized for the AVR Enhanced RISC instruction set. In order to achieve the required performance and flexibility, the following input/output schemes are supported by the Register File:

- One 8-bit output operand and one 8-bit result input
- Two 8-bit output operands and one 8-bit result input
- Two 8-bit output operands and one 16-bit result input
- One 16-bit output operand and one 16-bit result input

Figure 4-2 shows the structure of the 32 general purpose working registers in the CPU.

Figure 4-2. AVR CPU General Purpose Working Registers

	7 0	Addr.	
	R0	0x00	
	R1	0x01	
	R2	0x02	
	...		
	R13	0x0D	
General	R14	0x0E	
Purpose	R15	0x0F	
Working	R16	0x10	
Registers	R17	0x11	
	...		
	R26	0x1A	X-register Low Byte
	R27	0x1B	X-register High Byte
	R28	0x1C	Y-register Low Byte
	R29	0x1D	Y-register High Byte
	R30	0x1E	Z-register Low Byte
	R31	0x1F	Z-register High Byte

Most of the instructions operating on the Register File have direct access to all registers, and most of them are single cycle instructions.

As shown in Figure 4-2 on page 10, each register is also assigned a Data memory address, mapping them directly into the first 32 locations of the user Data Space. Although not being physically implemented as SRAM locations, this memory organization provides great flexibility in access of the registers, as the X-, Y- and Z-pointer registers can be set to index any register in the file.

4.4.1 The X-register, Y-register, and Z-register

The registers R26..R31 have some added functions to their general purpose usage. These registers are 16-bit address pointers for indirect addressing of the data space. The three indirect address registers X, Y, and Z are defined as described in Figure 4-3 on page 11.

Figure 4-3. The X-, Y-, and Z-registers

In the different addressing modes these address registers have functions as fixed displacement, automatic increment, and automatic decrement (see the instruction set reference for details).

4.5 Stack Pointer

The Stack is mainly used for storing temporary data, for storing local variables and for storing return addresses after interrupts and subroutine calls. The Stack Pointer Register always points to the top of the Stack. Note that the Stack is implemented as growing from higher memory locations to lower memory locations. This implies that a Stack PUSH command decreases the Stack Pointer.

The Stack Pointer points to the data SRAM Stack area where the Subroutine and Interrupt Stacks are located. This Stack space in the data SRAM is automaticall defined to the last address in SRAM during power on reset. The Stack Pointer must be set to point above 0x60. The Stack Pointer is decremented by one when data is pushed onto the Stack with the PUSH instruction, and it is decremented by two when the return address is pushed onto the Stack with subroutine call or interrupt. The Stack Pointer is incremented by one when data is popped from the Stack with the POP instruction, and it is incremented by two when data is popped from the Stack with return from subroutine RET or return from interrupt RETI.

The AVR Stack Pointer is implemented as two 8-bit registers in the I/O space. The number of bits actually used is implementation dependent. Note that the data space in some implementations of the AVR architecture is so small that only SPL is needed. In this case, the SPH Register will not be present.

4.5.1 SPL – Stack Pointer Low

Bit	7	6	5	4	3	2	1	0	
0x3D	SP7	SP6	SP5	SP4	SP3	SP2	SP1	SP0	SPL
Read/Write	R/W	R/W	R/W	R/W	R/W	R/W	R/W	R/W	
Initial Value	1	0	0	1	1	1	1	1	

4.6 Instruction Execution Timing

This section describes the general access timing concepts for instruction execution. The AVR CPU is driven by the CPU clock clk_{CPU}, directly generated from the selected clock source for the chip. No internal clock division is used.

Figure 4-4 on page 12 shows the parallel instruction fetches and instruction executions enabled by the Harvard architecture and the fast access Register File concept. This is the basic pipelining concept to obtain up to 1 MIPS per MHz with the corresponding unique results for functions per cost, functions per clocks, and functions per power-unit.

Figure 4-4. The Parallel Instruction Fetches and Instruction Executions

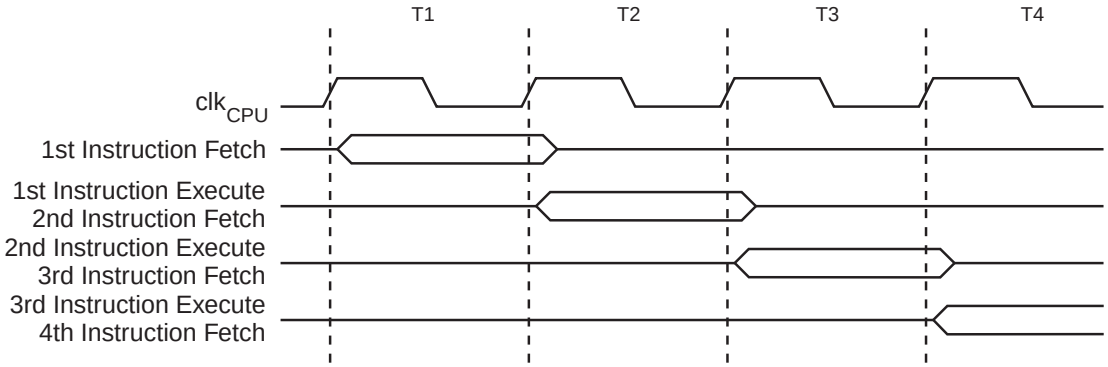

Figure 4-5 on page 12 shows the internal timing concept for the Register File. In a single clock cycle an ALU operation using two register operands is executed, and the result is stored back to the destination register.

Figure 4-5. Single Cycle ALU Operation

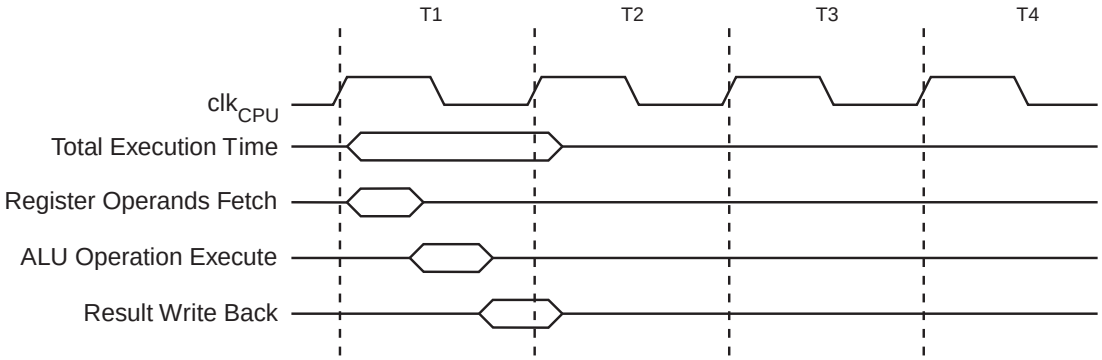

4.7 Reset and Interrupt Handling

The AVR provides several different interrupt sources. These interrupts and the separate Reset Vector each have a separate Program Vector in the Program memory space. All interrupts are assigned individual enable bits which must be written logic one together with the Global Interrupt Enable bit in the Status Register in order to enable the interrupt.

The lowest addresses in the Program memory space are by default defined as the Reset and Interrupt Vectors. The complete list of vectors is shown in "Interrupts" on page 45. The list also determines the priority levels of the different interrupts. The lower the address the higher is the

priority level. RESET has the highest priority, and next is INT0 – the External Interrupt Request 0.

When an interrupt occurs, the Global Interrupt Enable I-bit is cleared and all interrupts are disabled. The user software can write logic one to the I-bit to enable nested interrupts. All enabled interrupts can then interrupt the current interrupt routine. The I-bit is automatically set when a Return from Interrupt instruction – RETI – is executed.

There are basically two types of interrupts. The first type is triggered by an event that sets the Interrupt Flag. For these interrupts, the Program Counter is vectored to the actual Interrupt Vector in order to execute the interrupt handling routine, and hardware clears the corresponding Interrupt Flag. Interrupt Flags can also be cleared by writing a logic one to the flag bit position(s) to be cleared. If an interrupt condition occurs while the corresponding interrupt enable bit is cleared, the Interrupt Flag will be set and remembered until the interrupt is enabled, or the flag is cleared by software. Similarly, if one or more interrupt conditions occur while the Global Interrupt Enable bit is cleared, the corresponding Interrupt Flag(s) will be set and remembered until the Global Interrupt Enable bit is set, and will then be executed by order of priority.

The second type of interrupts will trigger as long as the interrupt condition is present. These interrupts do not necessarily have Interrupt Flags. If the interrupt condition disappears before the interrupt is enabled, the interrupt will not be triggered.

When the AVR exits from an interrupt, it will always return to the main program and execute one more instruction before any pending interrupt is served.

Note that the Status Register is not automatically stored when entering an interrupt routine, nor restored when returning from an interrupt routine. This must be handled by software.

When using the CLI instruction to disable interrupts, the interrupts will be immediately disabled. No interrupt will be executed after the CLI instruction, even if it occurs simultaneously with the CLI instruction. The following example shows how this can be used to avoid interrupts during the timed EEPROM write sequence.

Assembly Code Example

```
in r16, SREG     ; store SREG value
cli    ; disable interrupts during timed sequence
sbi EECR, EEMPE  ; start EEPROM write
sbi EECR, EEPE
out SREG, r16    ; restore SREG value (I-bit)
```

C Code Example

```
char cSREG;
cSREG = SREG; /* store SREG value */
/* disable interrupts during timed sequence */
__disable_interrupt();
EECR |= (1<<EEMPE); /* start EEPROM write */
EECR |= (1<<EEPE);
SREG = cSREG; /* restore SREG value (I-bit) */
```

Note: See “Code Examples” on page 6.

When using the SEI instruction to enable interrupts, the instruction following SEI will be executed before any pending interrupts, as shown in this example.

Assembly Code Example

`sei  ; set Global Interrupt Enable`
`sleep; enter sleep, waiting for interrupt`
`; note: will enter sleep before any pending`
`; interrupt(s)`

C Code Example

`__enable_interrupt(); /* set Global Interrupt Enable */`
`__sleep(); /* enter sleep, waiting for interrupt */`
`/* note: will enter sleep before any pending interrupt(s) */`

Note: See "Code Examples" on page 6.

4.7.1 Interrupt Response Time

The interrupt execution response for all the enabled AVR interrupts is four clock cycles minimum. After four clock cycles the Program Vector address for the actual interrupt handling routine is executed. During this four clock cycle period, the Program Counter is pushed onto the Stack. The vector is normally a jump to the interrupt routine, and this jump takes three clock cycles. If an interrupt occurs during execution of a multi-cycle instruction, this instruction is completed before the interrupt is served. If an interrupt occurs when the MCU is in sleep mode, the interrupt execution response time is increased by four clock cycles. This increase comes in addition to the start-up time from the selected sleep mode.

A return from an interrupt handling routine takes four clock cycles. During these four clock cycles, the Program Counter (two bytes) is popped back from the Stack, the Stack Pointer is incremented by two, and the I-bit in SREG is set.

5. Memories

This section describes the different memories in the ATtiny13A. The AVR architecture has two main memory spaces, the Data memory and the Program memory space. In addition, the ATtiny13A features an EEPROM Memory for data storage. All three memory spaces are linear and regular.

5.1 In-System Reprogrammable Flash Program Memory

The ATtiny13A contains 1K byte On-chip In-System Reprogrammable Flash memory for program storage. Since all AVR instructions are 16 or 32 bits wide, the Flash is organized as 512 x 16.

The Flash memory has an endurance of at least 10,000 write/erase cycles. The ATtiny13A Program Counter (PC) is nine bits wide, thus addressing the 512 Program memory locations. "Memory Programming" on page 103 contains a detailed description on Flash data serial downloading using the SPI pins.

Constant tables can be allocated within the entire Program memory address space (see the LPM – Load Program memory instruction description).

Timing diagrams for instruction fetch and execution are presented in "Instruction Execution Timing" on page 12.

Figure 5-1. Program Memory Map

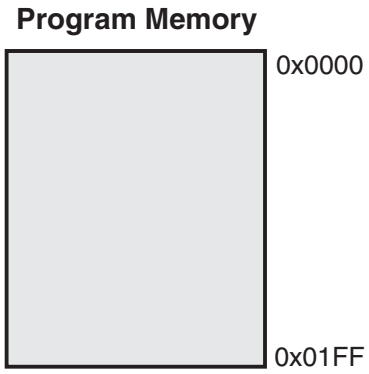

5.2 SRAM Data Memory

Figure 5-2 on page 16 shows how the ATtiny13A SRAM Memory is organized.

The lower 160 Data memory locations address both the Register File, the I/O memory and the internal data SRAM. The first 32 locations address the Register File, the next 64 locations the standard I/O memory, and the last 64 locations address the internal data SRAM.

The five different addressing modes for the Data memory cover: Direct, Indirect with Displacement, Indirect, Indirect with Pre-decrement, and Indirect with Post-increment. In the Register File, registers R26 to R31 feature the indirect addressing pointer registers.

The direct addressing reaches the entire data space.

The Indirect with Displacement mode reaches 63 address locations from the base address given by the Y- or Z-register.

When using register indirect addressing modes with automatic pre-decrement and post-increment, the address registers X, Y, and Z are decremented or incremented.

The 32 general purpose working registers, 64 I/O Registers, and the 64 bytes of internal data SRAM in the ATtiny13A are all accessible through all these addressing modes. The Register File is described in "General Purpose Register File" on page 10.

Figure 5-2. Data Memory Map

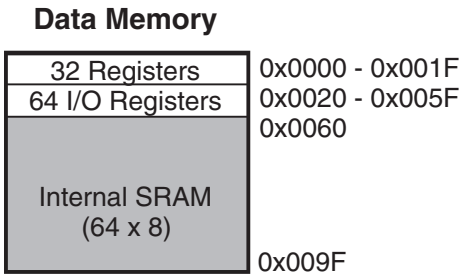

5.2.1 Data Memory Access Times

This section describes the general access timing concepts for internal memory access. The internal data SRAM access is performed in two clk_{CPU} cycles as described in Figure 5-3.

Figure 5-3. On-chip Data SRAM Access Cycles

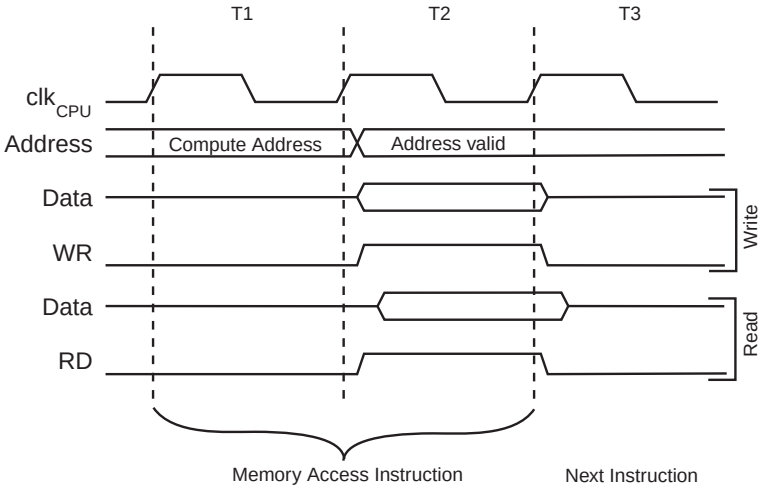

5.3 EEPROM Data Memory

The ATtiny13A contains 64 bytes of data EEPROM memory. It is organized as a separate data space, in which single bytes can be read and written. The EEPROM has an endurance of at least 100,000 write/erase cycles. The access between the EEPROM and the CPU is described in the following, specifying the EEPROM Address Registers, the EEPROM Data Register, and the EEPROM Control Register. For a detailed description of Serial data downloading to the EEPROM, see page 106.

5.3.1 EEPROM Read/Write Access

The EEPROM Access Registers are accessible in the I/O space.

The write access times for the EEPROM are given in Table 5-1 on page 21. A self-timing function, however, lets the user software detect when the next byte can be written. If the user code contains instructions that write the EEPROM, some precautions must be taken. In heavily filtered power supplies, V_{CC} is likely to rise or fall slowly on Power-up/down. This causes the device for some period of time to run at a voltage lower than specified as minimum for the clock frequency used. See "Preventing EEPROM Corruption" on page 19 for details on how to avoid problems in these situations.

In order to prevent unintentional EEPROM writes, a specific write procedure must be followed. Refer to "Atomic Byte Programming" on page 17 and "Split Byte Programming" on page 17 for details on this.

When the EEPROM is read, the CPU is halted for four clock cycles before the next instruction is executed. When the EEPROM is written, the CPU is halted for two clock cycles before the next instruction is executed.

5.3.2 Atomic Byte Programming

Using Atomic Byte Programming is the simplest mode. When writing a byte to the EEPROM, the user must write the address into the EEARL Register and data into EEDR Register. If the EEPMn bits are zero, writing EEPE (within four cycles after EEMPE is written) will trigger the erase/write operation. Both the erase and write cycle are done in one operation and the total programming time is given in Table 5-1 on page 21. The EEPE bit remains set until the erase and write operations are completed. While the device is busy with programming, it is not possible to do any other EEPROM operations.

5.3.3 Split Byte Programming

It is possible to split the erase and write cycle in two different operations. This may be useful if the system requires short access time for some limited period of time (typically if the power supply voltage falls). In order to take advantage of this method, it is required that the locations to be written have been erased before the write operation. But since the erase and write operations are split, it is possible to do the erase operations when the system allows doing time-critical operations (typically after Power-up).

5.3.4 Erase

To erase a byte, the address must be written to EEARL. If the EEPMn bits are 0b01, writing the EEPE (within four cycles after EEMPE is written) will trigger the erase operation only (programming time is given in Table 5-1 on page 21). The EEPE bit remains set until the erase operation completes. While the device is busy programming, it is not possible to do any other EEPROM operations.

5.3.5 Write

To write a location, the user must write the address into EEARL and the data into EEDR. If the EEPMn bits are 0b10, writing the EEPE (within four cycles after EEMPE is written) will trigger the write operation only (programming time is given in Table 5-1 on page 21). The EEPE bit remains set until the write operation completes. If the location to be written has not been erased before write, the data that is stored must be considered as lost. While the device is busy with programming, it is not possible to do any other EEPROM operations.

The calibrated Oscillator is used to time the EEPROM accesses. Make sure the Oscillator frequency is within the requirements described in "OSCCAL – Oscillator Calibration Register" on page 27.

The following code examples show one assembly and one C function for erase, write, or atomic write of the EEPROM. The examples assume that interrupts are controlled (e.g., by disabling interrupts globally) so that no interrupts will occur during execution of these functions.

Assembly Code Example

```
EEPROM_write:
  ; Wait for completion of previous write
  sbic EECR,EEPE
  rjmp EEPROM_write
  ; Set Programming mode
  ldi  r16, (0<<EEPM1)|(0<<EEPM0)
  out  EECR, r16
  ; Set up address (r17) in address register
  out EEARL, r17
  ; Write data (r16) to data register
  out EEDR,r16
  ; Write logical one to EEMPE
  sbi  EECR,EEMPE
  ; Start eeprom write by setting EEPE
  sbi  EECR,EEPE
  ret
```

C Code Example

```
void EEPROM_write(unsigned char ucAddress, unsigned char ucData)
{
  /* Wait for completion of previous write */
  while(EECR & (1<<EEPE))
    ;
  /* Set Programming mode */
  EECR = (0<<EEPM1)|(0>>EEPM0)
  /* Set up address and data registers */
  EEARL = ucAddress;
  EEDR = ucData;
  /* Write logical one to EEMPE */
  EECR |= (1<<EEMPE);
  /* Start eeprom write by setting EEPE */
  EECR |= (1<<EEPE);
}
```

Note: See "Code Examples" on page 6.

The next code examples show assembly and C functions for reading the EEPROM. The examples assume that interrupts are controlled so that no interrupts will occur during execution of these functions.

Assembly Code Example

```
EEPROM_read:
  ; Wait for completion of previous write
  sbic EECR,EEPE
  rjmp EEPROM_read
  ; Set up address (r17) in address register
  out  EEARL, r17
  ; Start eeprom read by writing EERE
  sbi  EECR,EERE
  ; Read data from data register
  in   r16,EEDR
  ret
```

C Code Example

```
unsigned char EEPROM_read(unsigned char ucAddress)
{
  /* Wait for completion of previous write */
  while(EECR & (1<<EEPE))
    ;
  /* Set up address register */
  EEARL = ucAddress;
  /* Start eeprom read by writing EERE */
  EECR |= (1<<EERE);
  /* Return data from data register */
  return EEDR;
}
```

Note: See “Code Examples” on page 6.

5.3.6 Preventing EEPROM Corruption

During periods of low V_{CC}, the EEPROM data can be corrupted because the supply voltage is too low for the CPU and the EEPROM to operate properly. These issues are the same as for board level systems using EEPROM, and the same design solutions should be applied.

An EEPROM data corruption can be caused by two situations when the voltage is too low. First, a regular write sequence to the EEPROM requires a minimum voltage to operate correctly. Secondly, the CPU itself can execute instructions incorrectly, if the supply voltage is too low.

EEPROM data corruption can easily be avoided by following this design recommendation:

Keep the AVR RESET active (low) during periods of insufficient power supply voltage. This can be done by enabling the internal Brown-out Detector (BOD). If the detection level of the internal BOD does not match the needed detection level, an external low V_{CC} reset protection circuit can be used. If a reset occurs while a write operation is in progress, the write operation will be completed provided that the power supply voltage is sufficient.

5.4 I/O Memory

The I/O space definition of the ATtiny13A is shown in "Register Summary" on page 158.

All ATtiny13A I/Os and peripherals are placed in the I/O space. All I/O locations may be accessed by the LD/LDS/LDD and ST/STS/STD instructions, transferring data between the 32 general purpose working registers and the I/O space. I/O Registers within the address range 0x00 - 0x1F are directly bit-accessible using the SBI and CBI instructions. In these registers, the value of single bits can be checked by using the SBIS and SBIC instructions. Refer to the instruction set section for more details. When using the I/O specific commands IN and OUT, the I/O addresses 0x00 - 0x3F must be used. When addressing I/O Registers as data space using LD and ST instructions, 0x20 must be added to these addresses.

For compatibility with future devices, reserved bits should be written to zero if accessed. Reserved I/O memory addresses should never be written.

Some of the Status Flags are cleared by writing a logical one to them. Note that, unlike most other AVRs, the CBI and SBI instructions will only operate on the specified bit, and can therefore be used on registers containing such Status Flags. The CBI and SBI instructions work with registers 0x00 to 0x1F only.

The I/O and Peripherals Control Registers are explained in later sections.

5.5 Register Description

5.5.1 EEARL – EEPROM Address Register

Bit	7	6	5	4	3	2	1	0	
0x1E	–	–	EEAR5	EEAR4	EEAR3	EEAR2	EEAR1	EEAR0	EEARL
Read/Write	R	R	R/W	R/W	R/W	R/W	R/W	R/W	
Initial Value	0	0	X	X	X	X	X	X	

- **Bits 7:6 – Res: Reserved Bits**

These bits are reserved bits in the ATtiny13A and will always read as zero.

- **Bits 5:0 – EEAR[5:0]: EEPROM Address**

The EEPROM Address Register – EEARL – specifies the EEPROM address in the 64 bytes EEPROM space. The EEPROM data bytes are addressed linearly between 0 and 63. The initial value of EEARL is undefined. A proper value must be written before the EEPROM may be accessed.

5.5.2 EEDR – EEPROM Data Register

Bit	7	6	5	4	3	2	1	0	
0x1D	EEDR7	EEDR6	EEDR5	EEDR4	EEDR3	EEDR2	EEDR1	EEDR0	EEDR
Read/Write	R/W	R/W	R/W	R/W	R/W	R/W	R/W	R/W	
Initial Value	X	X	X	X	X	X	X	X	

- **Bits 7:0 – EEDR[7:0]: EEPROM Data**

For the EEPROM write operation the EEDR Register contains the data to be written to the EEPROM in the address given by the EEARL Register. For the EEPROM read operation, the EEDR contains the data read out from the EEPROM at the address given by EEARL.

5.5.3 EECR – EEPROM Control Register

Bit	7	6	5	4	3	2	1	0	
0x1C	–	–	EEPM1	EEPM0	EERIE	EEMPE	EEPE	EERE	EECR
Read/Write	R	R	R/W	R/W	R/W	R/W	R/W	R/W	
Initial Value	0	0	X	X	0	0	X	0	

- **Bit 7 – Res: Reserved Bit**

This bit is reserved for future use and will always read as 0 in ATtiny13A. For compatibility with future AVR devices, always write this bit to zero. After reading, mask out this bit.

- **Bit 6 – Res: Reserved Bit**

This bit is reserved in the ATtiny13A and will always read as zero.

- **Bits 5:4 – EEPM[1:0]: EEPROM Programming Mode Bits**

The EEPROM Programming mode bits setting defines which programming action that will be triggered when writing EEPE. It is possible to program data in one atomic operation (erase the old value and program the new value) or to split the Erase and Write operations in two different operations. The Programming times for the different modes are shown in Table 5-1 on page 21. While EEPE is set, any write to EEPMn will be ignored. During reset, the EEPMn bits will be reset to 0b00 unless the EEPROM is busy programming.

Table 5-1. EEPROM Mode Bits

EEPM1	EEPM0	Programming Time	Operation
0	0	3.4 ms	Erase and Write in one operation (Atomic Operation)
0	1	1.8 ms	Erase Only
1	0	1.8 ms	Write Only
1	1	–	Reserved for future use

- **Bit 3 – EERIE: EEPROM Ready Interrupt Enable**

Writing EERIE to one enables the EEPROM Ready Interrupt if the I-bit in SREG is set. Writing EERIE to zero disables the interrupt. The EEPROM Ready Interrupt generates a constant interrupt when Non-volatile memory is ready for programming.

- **Bit 2 – EEMPE: EEPROM Master Program Enable**

The EEMPE bit determines whether writing EEPE to one will have effect or not.

When EEMPE is set, setting EEPE within four clock cycles will program the EEPROM at the selected address. If EEMPE is zero, setting EEPE will have no effect. When EEMPE has been written to one by software, hardware clears the bit to zero after four clock cycles.

- **Bit 1 – EEPE: EEPROM Program Enable**

The EEPROM Program Enable Signal EEPE is the programming enable signal to the EEPROM. When EEPE is written, the EEPROM will be programmed according to the EEPMn bits setting. The EEMPE bit must be written to one before a logical one is written to EEPE, otherwise no EEPROM write takes place. When the write access time has elapsed, the EEPE bit is cleared by hardware. When EEPE has been set, the CPU is halted for two cycles before the next instruction is executed.

- **Bit 0 – EERE: EEPROM Read Enable**

The EEPROM Read Enable Signal – EERE – is the read strobe to the EEPROM. When the correct address is set up in the EEARL Register, the EERE bit must be written to one to trigger the EEPROM read. The EEPROM read access takes one instruction, and the requested data is available immediately. When the EEPROM is read, the CPU is halted for four cycles before the next instruction is executed. The user should poll the EEPE bit before starting the read operation. If a write operation is in progress, it is neither possible to read the EEPROM, nor to change the EEARL Register.

6. System Clock and Clock Options

6.1 Clock Systems and their Distribution

Figure 6-1 presents the principal clock systems in the AVR and their distribution. All of the clocks need not be active at a given time. In order to reduce power consumption, the clocks to modules not being used can be halted by using different sleep modes, as described in "Power Management and Sleep Modes" on page 30. The clock systems are detailed below.

Figure 6-1. Clock Distribution

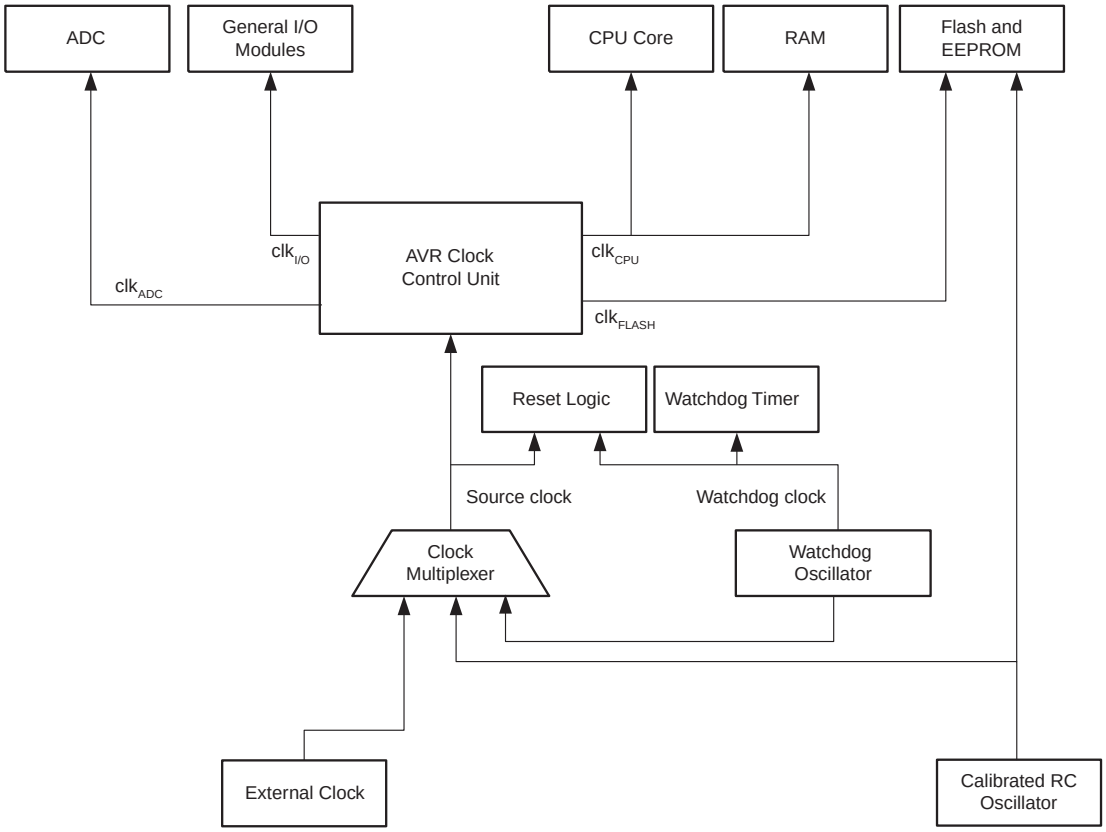

6.1.1 CPU Clock – clk_{CPU}

The CPU clock is routed to parts of the system concerned with operation of the AVR core. Examples of such modules are the General Purpose Register File, the Status Register and the Data memory holding the Stack Pointer. Halting the CPU clock inhibits the core from performing general operations and calculations.

6.1.2 I/O Clock – $clk_{I/O}$

The I/O clock is used by the majority of the I/O modules, like Timer/Counter. The I/O clock is also used by the External Interrupt module, but note that some external interrupts are detected by asynchronous logic, allowing such interrupts to be detected even if the I/O clock is halted.

6.1.3 Flash Clock – clk_{FLASH}

The Flash clock controls operation of the Flash interface. The Flash clock is usually active simultaneously with the CPU clock.

6.1.4 ADC Clock – clk_{ADC}

The ADC is provided with a dedicated clock domain. This allows halting the CPU and I/O clocks in order to reduce noise generated by digital circuitry. This gives more accurate ADC conversion results.

6.2 Clock Sources

The device has the following clock source options, selectable by Flash fuse bits as shown below. The clock from the selected source is input to the AVR clock generator, and routed to the appropriate modules.

Table 6-1. Device Clocking Options Select

Device Clocking Option	CKSEL[1:0][1]
External Clock (see page 24)	00
Calibrated Internal 4.8/9.6 MHz Oscillator (see page 25)	01, 10
Internal 128 kHz Oscillator (see page 26)	11

Note: 1. For all fuses “1” means unprogrammed while “0” means programmed.

The various choices for each clocking option is given in the following sections. When the CPU wakes up from Power-down or Power-save, the selected clock source is used to time the start-up, ensuring stable Oscillator operation before instruction execution starts. When the CPU starts from reset, there is an additional delay allowing the power to reach a stable level before commencing normal operation. The Watchdog Oscillator is used for timing this real-time part of the start-up time. The number of WDT Oscillator cycles used for each time-out is shown in Table 6-2.

Table 6-2. Number of Watchdog Oscillator Cycles

Typ Time-out	Number of Cycles
4 ms	512
64 ms	8K (8,192)

6.2.1 External Clock

To drive the device from an external clock source, CLKI should be driven as shown in Figure 6-2. To run the device on an external clock, the CKSEL fuses must be programmed to “00”.

Figure 6-2. External Clock Drive Configuration

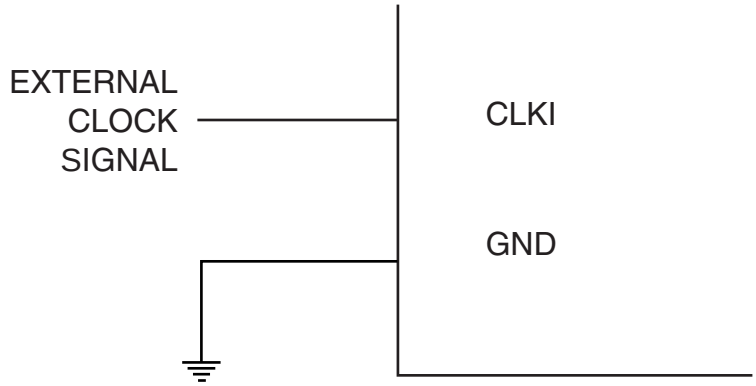

When this clock source is selected, start-up times are determined by the SUT fuses as shown in Table 6-3.

Table 6-3. Start-up Times for the External Clock Selection

SUT[1:0]	Start-up Time from Power-down and Power-save	Additional Delay from Reset	Recommended Usage
00	6 CK	14CK	BOD enabled
01	6 CK	14CK + 4 ms	Fast rising power
10	6 CK	14CK + 64 ms	Slowly rising power
11	Reserved		

When applying an external clock, it is required to avoid sudden changes in the applied clock frequency to ensure stable operation of the MCU. A variation in frequency of more than 2% from one clock cycle to the next can lead to unpredictable behavior. It is required to ensure that the MCU is kept in Reset during such changes in the clock frequency.

Note that the System Clock Prescaler can be used to implement run-time changes of the internal clock frequency while still ensuring stable operation. Refer to "System Clock Prescaler" on page 26 for details.

6.2.2 Calibrated Internal 4.8/9.6 MHz Oscillator

The calibrated internal oscillator provides a 4.8 or 9.6 MHz clock source. The frequency is nominal at 3V and 25°C. If the frequency exceeds the specification of the device (depends on V_{CC}), the CKDIV8 fuse must be programmed so that the internal clock is divided by 8 during start-up. See "System Clock Prescaler" on page 26. for more details.

The internal oscillator is selected as the system clock by programming the CKSEL fuses as shown in Table 6-4. If selected, it will operate with no external components.

Table 6-4. Internal Calibrated RC Oscillator Operating Modes

CKSEL[1:0]	Nominal Frequency
10[1]	9.6 MHz
01	4.8 MHz

Note: 1. The device is shipped with this option selected.

During reset, hardware loads the calibration data into the OSCCAL register and thereby automatically calibrates the oscillator. There are separate calibration bytes for 4.8 and 9.6 MHz operation but only one is automatically loaded during reset (see section "Calibration Bytes" on page 105). This is because the only difference between 4.8 MHz and 9.6 MHz mode is an internal clock divider.

By changing the OSCCAL register from SW, see "OSCCAL – Oscillator Calibration Register" on page 27, it is possible to get a higher calibration accuracy than by using the factory calibration. See "Calibrated Internal RC Oscillator Accuracy" on page 119.

When this oscillator is used as the chip clock, the Watchdog Oscillator will still be used for the Watchdog Timer and for the Reset Time-out. For more information on the pre-programmed calibration value, see the section "Calibration Bytes" on page 105.

When this Oscillator is selected, start-up times are determined by the SUT fuses as shown in Table 6-5.

Table 6-5. Start-up Times for the Internal Calibrated RC Oscillator Clock Selection

SUT[1:0]	Start-up Time from Power-down	Additional Delay from Reset (V_{CC} = 5.0V)	Recommended Usage
00	6 CK	14CK[2]	BOD enabled
01	6 CK	14CK + 4 ms	Fast rising power
10[1]	6 CK	14CK + 64 ms	Slowly rising power
11	Reserved		

Notes: 1. The device is shipped with this option selected.
2. If the RSTDISBL fuse is programmed, this start-up time will be increased to 14CK + 4 ms to ensure programming mode can be entered.

6.2.3 Internal 128 kHz Oscillator

The 128 kHz internal Oscillator is a low power Oscillator providing a clock of 128 kHz. The frequency depends on supply voltage, temperature and batch variations. This clock may be select as the system clock by programming the CKSEL fuses to “11”.

When this clock source is selected, start-up times are determined by the SUT fuses as shown in Table 6-6.

Table 6-6. Start-up Times for the 128 kHz Internal Oscillator

SUT[1:0]	Start-up Time from Power-down and Power-save	Additional Delay from Reset	Recommended Usage
00	6 CK	14CK[1]	BOD enabled
01	6 CK	14CK + 4 ms	Fast rising power
10	6 CK	14CK + 64 ms	Slowly rising power
11	Reserved		

Note: 1. If the RSTDISBL fuse is programmed, this start-up time will be increased to 14CK + 4 ms to ensure programming mode can be entered.

6.2.4 Default Clock Source

The device is shipped with CKSEL = “10”, SUT = “10”, and CKDIV8 programmed. The default clock source setting is therefore the Internal RC Oscillator running at 9.6 MHz with longest start-up time and an initial system clock prescaling of 8. This default setting ensures that all users can make their desired clock source setting using an In-System or High-voltage Programmer.

6.3 System Clock Prescaler

The ATtiny13A system clock can be divided by setting the “CLKPR – Clock Prescale Register” on page 28. This feature can be used to decrease power consumption when the requirement for processing power is low. This can be used with all clock source options, and it will affect the clock frequency of the CPU and all synchronous peripherals. $clk_{I/O}$, clk_{ADC}, clk_{CPU}, and clk_{FLASH} are divided by a factor as shown in Table 6-8 on page 28.

6.3.1 Switching Time

When switching between prescaler settings, the System Clock Prescaler ensures that no glitches occur in the clock system and that no intermediate frequency is higher than neither the clock frequency corresponding to the previous setting, nor the clock frequency corresponding to the new setting.

The ripple counter that implements the prescaler runs at the frequency of the undivided clock, which may be faster than the CPU's clock frequency. Hence, it is not possible to determine the state of the prescaler – even if it were readable, and the exact time it takes to switch from one clock division to another cannot be exactly predicted.

From the time the CLKPS values are written, it takes between T1 + T2 and T1 + 2*T2 before the new clock frequency is active. In this interval, 2 active clock edges are produced. Here, T1 is the previous clock period, and T2 is the period corresponding to the new prescaler setting.

6.4 Register Description

6.4.1 OSCCAL – Oscillator Calibration Register

Bit	7	6	5	4	3	2	1	0	
0x31	–	CAL6	CAL5	CAL4	CAL3	CAL2	CAL1	CAL0	OSCCAL
Read/Write	R	R/W	R/W	R/W	R/W	R/W	R/W	R/W	
Initial Value	0	Device Specific Calibration Value							

- **Bit 7 – Res: Reserved Bit**

This bit is reserved bit in ATtiny13A and it will always read zero.

- **Bits 6:0 – CAL[6:0]: Oscillator Calibration Value**

Writing the calibration byte to this address will trim the internal Oscillator to remove process variations from the Oscillator frequency. This is done automatically during Chip Reset. When OSCCAL is zero, the lowest available frequency is chosen. Writing non-zero values to this register will increase the frequency of the internal Oscillator. Writing 0x7F to the register gives the highest available frequency.

The calibrated Oscillator is used to time EEPROM and Flash access. If EEPROM or Flash is written, do not calibrate to more than 10% above the nominal frequency. Otherwise, the EEPROM or Flash write may fail. Note that the Oscillator is intended for calibration to 9.6 MHz or 4.8 MHz. Tuning to other values is not guaranteed, as indicated in Table 6-7 below.

To ensure stable operation of the MCU the calibration value should be changed in small steps. A variation in frequency of more than 2% from one cycle to the next can lead to unpredicatble behavior. Changes in OSCCAL should not exceed 0x20 for each calibration. It is required to ensure that the MCU is kept in Reset during such changes in the clock frequency

Table 6-7. Internal RC Oscillator Frequency Range

OSCCAL Value	Typical Lowest Frequency with Respect to Nominal Frequency	Typical Highest Frequency with Respect to Nominal Frequency
0x00	50%	100%
0x3F	75%	150%
0x7F	100%	200%

6.4.2 CLKPR – Clock Prescale Register

Bit	7	6	5	4	3	2	1	0	
0x26	CLKPCE	–	–	–	CLKPS3	CLKPS2	CLKPS1	CLKPS0	CLKPR
Read/Write	R/W	R	R	R	R/W	R/W	R/W	R/W	
Initial Value	0	0	0	0	See Bit Description				

- **Bit 7 – CLKPCE: Clock Prescaler Change Enable**

The CLKPCE bit must be written to logic one to enable change of the CLKPS bits. The CLKPCE bit is only updated when the other bits in CLKPR are simultaneously written to zero. CLKPCE is cleared by hardware four cycles after it is written or when the CLKPS bits are written. Rewriting the CLKPCE bit within this time-out period does neither extend the time-out period, nor clear the CLKPCE bit.

- **Bits 6:4 – Res: Reserved Bits**

These bits are reserved bits in the ATtiny13A and will always read as zero.

- **Bits 3:0 – CLKPS[3:0]: Clock Prescaler Select Bits 3 - 0**

These bits define the division factor between the selected clock source and the internal system clock. These bits can be written run-time to vary the clock frequency to suit the application requirements. As the divider divides the master clock input to the MCU, the speed of all synchronous peripherals is reduced when a division factor is used. The division factors are given in Table 6-8 on page 28.

To avoid unintentional changes of clock frequency, a special write procedure must be followed to change the CLKPS bits:

1. Write the Clock Prescaler Change Enable (CLKPCE) bit to one and all other bits in CLKPR to zero.
2. Within four cycles, write the desired value to CLKPS while writing a zero to CLKPCE.

Interrupts must be disabled when changing prescaler setting to make sure the write procedure is not interrupted.

The CKDIV8 Fuse determines the initial value of the CLKPS bits. If CKDIV8 is unprogrammed, the CLKPS bits will be reset to “0000”. If CKDIV8 is programmed, CLKPS bits are reset to “0011”, giving a division factor of eight at start up. This feature should be used if the selected clock source has a higher frequency than the maximum frequency of the device at the present operating conditions. Note that any value can be written to the CLKPS bits regardless of the CKDIV8 Fuse setting. The Application software must ensure that a sufficient division factor is chosen if the selcted clock source has a higher frequency than the maximum frequency of the device at the present operating conditions. The device is shipped with the CKDIV8 Fuse programmed.

Table 6-8. Clock Prescaler Select

CLKPS3	CLKPS2	CLKPS1	CLKPS0	Clock Division Factor
0	0	0	0	1
0	0	0	1	2
0	0	1	0	4
0	0	1	1	8

Table 6-8. Clock Prescaler Select (Continued)

CLKPS3	CLKPS2	CLKPS1	CLKPS0	Clock Division Factor
0	1	0	0	16
0	1	0	1	32
0	1	1	0	64
0	1	1	1	128
1	0	0	0	256
1	0	0	1	Reserved
1	0	1	0	Reserved
1	0	1	1	Reserved
1	1	0	0	Reserved
1	1	0	1	Reserved
1	1	1	0	Reserved
1	1	1	1	Reserved

7. Power Management and Sleep Modes

The high performance and industry leading code efficiency makes the AVR microcontrollers an ideal choise for low power applications. In addition, sleep modes enable the application to shut down unused modules in the MCU, thereby saving power. The AVR provides various sleep modes allowing the user to tailor the power consumption to the application's requirements.

7.1 Sleep Modes

Figure 6-1 on page 23 presents the different clock systems in the ATtiny13A, and their distribution. The figure is helpful in selecting an appropriate sleep mode. Table 7-1 shows the different sleep modes and their wake up sources.

Table 7-1. Active Clock Domains and Wake-up Sources in the Different Sleep Modes

	Active Clock Domains				Oscillators	Wake-up Sources				
Sleep Mode	clk_{CPU}	clk_{FLASH}	clk_{IO}	clk_{ADC}	Main Clock Source Enabled	INT0 and Pin Change	SPM/ EEPROM Ready	ADC	Other I/O	Watchdog Interrupt
Idle			X	X	X	X	X	X	X	X
ADC Noise Reduction				X	X	X(1)	X	X		X
Power-down						X(1)				X

Note: 1. For INT0, only level interrupt.

To enter any of the three sleep modes, the SE bit in MCUCR must be written to logic one and a SLEEP instruction must be executed. The SM[1:0] bits in the MCUCR Register select which sleep mode (Idle, ADC Noise Reduction, or Power-down) will be activated by the SLEEP instruction. See Table 7-2 on page 34 for a summary.

If an enabled interrupt occurs while the MCU is in a sleep mode, the MCU wakes up. The MCU is then halted for four cycles in addition to the start-up time, executes the interrupt routine, and resumes execution from the instruction following SLEEP. The contents of the Register File and SRAM are unaltered when the device wakes up from sleep. If a reset occurs during sleep mode, the MCU wakes up and executes from the Reset Vector.

Note that if a level triggered interrupt is used for wake-up from Power-down mode, the changed level must be held for some time to wake up the MCU. Refer to "External Interrupts" on page 46 for details.

7.1.1 Idle Mode

When the SM[1:0] bits are written to 00, the SLEEP instruction makes the MCU enter Idle mode, stopping the CPU but allowing Analog Comparator, ADC, Timer/Counter, Watchdog, and the interrupt system to continue operating. This sleep mode basically halts clk_{CPU} and clk_{FLASH}, while allowing the other clocks to run.

Idle mode enables the MCU to wake up from external triggered interrupts as well as internal ones like the Timer Overflow. If wake-up from the Analog Comparator interrupt is not required, the Analog Comparator can be powered down by setting the ACD bit in the Analog Comparator

Control and Status Register – ACSR. This will reduce power consumption in Idle mode. If the ADC is enabled, a conversion starts automatically when this mode is entered.

7.1.2 ADC Noise Reduction Mode

When the SM[1:0] bits are written to 01, the SLEEP instruction makes the MCU enter ADC Noise Reduction mode, stopping the CPU but allowing the ADC, the external interrupts, and the Watchdog to continue operating (if enabled). This sleep mode halts $clk_{I/O}$, clk_{CPU}, and clk_{FLASH}, while allowing the other clocks to run.

This improves the noise environment for the ADC, enabling higher resolution measurements. If the ADC is enabled, a conversion starts automatically when this mode is entered. Apart form the ADC Conversion Complete interrupt, only an External Reset, a Watchdog Reset, a Brown-out Reset, an SPM/EEPROM ready interrupt, an external level interrupt on INT0 or a pin change interrupt can wake up the MCU from ADC Noise Reduction mode.

7.1.3 Power-down Mode

When the SM[1:0] bits are written to 10, the SLEEP instruction makes the MCU enter Power-down mode. In this mode, the Oscillator is stopped, while the external interrupts, and the Watchdog continue operating (if enabled). Only an External Reset, a Watchdog Reset, a Brown-out Reset, an external level interrupt on INT0, or a pin change interrupt can wake up the MCU. This sleep mode halts all generated clocks, allowing operation of asynchronous modules only.

7.2 Software BOD Disable

When the Brown-out Detector (BOD) is enabled by BODLEVEL fuses (see Table 17-3 on page 104), the BOD is actively monitoring the supply voltage during a sleep period. It is possible to save power by disabling the BOD by software in Power-Down sleep mode. The sleep mode power consumption will then be at the same level as when BOD is globally disabled by fuses.

If BOD is disabled by software, the BOD function is turned off immediately after entering the sleep mode. Upon wake-up from sleep, BOD is automatically enabled again. This ensures safe operation in case the V_{CC} level has dropped during the sleep period.

When the BOD has been disabled, the wake-up time from sleep mode will be approximately 60µs to ensure that the BOD is working correctly before the MCU continues executing code.

BOD disable is controlled by the BODS (BOD Sleep) bit of BOD Control Register, see “BODCR – Brown-Out Detector Control Register” on page 33. Writing this bit to one turns off BOD in Power-Down and Stand-By, while writing a zero keeps the BOD active. The default setting is zero, i.e. BOD active.

Writing to the BODS bit is controlled by a timed sequence and an enable bit, see “BODCR – Brown-Out Detector Control Register” on page 33.

7.3 Power Reduction Register

The Power Reduction Register (see “PRR – Power Reduction Register” on page 34) provides a method to reduce power consumption by stopping the clock to individual peripherals. The current state of the peripheral is frozen and the I/O registers can not be read or written. When stopping the clock resources used by the peripheral will remain occupied, hence the peripheral should in most cases be disabled before stopping the clock. Waking up a module (by clearing the bit in PRR) puts the module in the same state as before shutdown.

Modules can be shut down in Idle and Active modes, significantly helping to reduce the overall power consumption. In all other sleep modes, the clock is already stopped. See "Supply Current of I/O Modules" on page 124 for examples.

7.4 Minimizing Power Consumption

There are several issues to consider when trying to minimize the power consumption in an AVR controlled system. In general, sleep modes should be used as much as possible, and the sleep mode should be selected so that as few as possible of the device's functions are operating. All functions not needed should be disabled. In particular, the following modules may need special consideration when trying to achieve the lowest possible power consumption.

7.4.1 Analog to Digital Converter

If enabled, the ADC will be enabled in all sleep modes. To save power, the ADC should be disabled before entering any sleep mode. When the ADC is turned off and on again, the next conversion will be an extended conversion. Refer to "Analog to Digital Converter" on page 82 for details on ADC operation.

7.4.2 Analog Comparator

When entering Idle mode, the Analog Comparator should be disabled if not used. When entering ADC Noise Reduction mode, the Analog Comparator should be disabled. In the other sleep modes, the Analog Comparator is automatically disabled. However, if the Analog Comparator is set up to use the Internal Voltage Reference as input, the Analog Comparator should be disabled in all sleep modes. Otherwise, the Internal Voltage Reference will be enabled, independent of sleep mode. Refer to "Analog Comparator" on page 79 for details on how to configure the Analog Comparator.

7.4.3 Brown-out Detector

If the Brown-out Detector is not needed in the application, this module should be turned off. If the Brown-out Detector is enabled by the BODLEVEL fuses, it will be enabled in all sleep modes, and hence, always consume power. In the deeper sleep modes, this will contribute significantly to the total current consumption. See "Brown-out Detection" on page 37 and "Software BOD Disable" on page 31 for details on how to configure the Brown-out Detector.

7.4.4 Internal Voltage Reference

The Internal Voltage Reference will be enabled when needed by the Brown-out Detection, the Analog Comparator or the ADC. If these modules are disabled as described in the sections above, the internal voltage reference will be disabled and it will not be consuming power. When turned on again, the user must allow the reference to start up before the output is used. If the reference is kept on in sleep mode, the output can be used immediately. Refer to "Internal Voltage Reference" on page 38 for details on the start-up time.

7.4.5 Watchdog Timer

If the Watchdog Timer is not needed in the application, this module should be turned off. If the Watchdog Timer is enabled, it will be enabled in all sleep modes, and hence, always consume power. In the deeper sleep modes, this will contribute significantly to the total current consumption. Refer to "Interrupts" on page 45 for details on how to configure the Watchdog Timer.

7.4.6 Port Pins

When entering a sleep mode, all port pins should be configured to use minimum power. The most important thing is then to ensure that no pins drive resistive loads. In sleep modes where both the I/O clock ($clk_{I/O}$) and the ADC clock (clk_{ADC}) are stopped, the input buffers of the device will be disabled. This ensures that no power is consumed by the input logic when not needed. In some cases, the input logic is needed for detecting wake-up conditions, and it will then be enabled. Refer to the section "Digital Input Enable and Sleep Modes" on page 53 for details on which pins are enabled. If the input buffer is enabled and the input signal is left floating or has an analog signal level close to $V_{CC}/2$, the input buffer will use excessive power.

For analog input pins, the digital input buffer should be disabled at all times. An analog signal level close to $V_{CC}/2$ on an input pin can cause significant current even in active mode. Digital input buffers can be disabled by writing to the Digital Input Disable Register (DIDR0). Refer to "DIDR0 – Digital Input Disable Register 0" on page 81 for details.

7.5 Register Description

7.5.1 BODCR – Brown-Out Detector Control Register

The BOD Control Register contains control bits for disabling the BOD by software.

Bit	7	6	5	4	3	2	1	0	
0x30	–	–	–	–	–	–	BODS	BODSE	BODCR
Read/Write	R	R	R	R	R	R	R/W	R/W	
Initial Value	0	0	0	0	0	0	0	0	

- **Bit 1 – BODS: BOD Sleep**

In order to disable BOD during sleep the BODS bit must be written to logic one. This is controlled by a timed sequence and the enable bit, BODSE. First, both BODS and BODSE must be set to one. Second, within four clock cycles, BODS must be set to one and BODSE must be set to zero. The BODS bit is active three clock cycles after it is set. A sleep instruction must be executed while BODS is active in order to turn off the BOD for the actual sleep mode. The BODS bit is automatically cleared after three clock cycles.

- **Bit 0 – BODSE: BOD Sleep Enable**

The BODSE bit enables setting of BODS control bit, as explained on BODS bit description. BOD disable is controlled by a timed sequence.

7.5.2 MCUCR – MCU Control Register

The MCU Control Register contains control bits for power management.

Bit	7	6	5	4	3	2	1	0	
0x35	–	PUD	SE	SM1	SM0	–	ISC01	ISC00	MCUCR
Read/Write	R	R/W	R/W	R/W	R/W	R	R/W	R/W	
Initial Value	0	0	0	0	0	0	0	0	

- **Bit 5 – SE: Sleep Enable**

The SE bit must be written to logic one to make the MCU enter the sleep mode when the SLEEP instruction is executed. To avoid the MCU entering the sleep mode unless it is the programmer's purpose, it is recommended to write the Sleep Enable (SE) bit to one just before the execution of the SLEEP instruction and to clear it immediately after waking up.

- **Bits 4:3 – SM[1:0]: Sleep Mode Select Bits 1:0**

These bits select between the three available sleep modes as shown in Table 7-2 on page 34.

Table 7-2. Sleep Mode Select

SM1	SM0	Sleep Mode
0	0	Idle
0	1	ADC Noise Reduction
1	0	Power-down
1	1	Reserved

7.5.3 PRR – Power Reduction Register

The Power Reduction Register provides a method to reduce power consumption by allowing peripheral clock signals to be disabled.

Bit	7	6	5	4	3	2	1	0	
0x25	–	–	–	–	–	–	PRTIM0	PRADC	PRR
Read/Write	R	R	R	R	R	R	R/W	R/W	
Initial Value	0	0	0	0	0	0	0	0	

- **Bits 7:2 – Res: Reserved Bits**

These bits are reserved and will always read as zero.

- **Bit 1 – PRTIM0: Power Reduction Timer/Counter0**

Writing a logic one to this bit shuts down the Timer/Counter0 module. When the Timer/Counter0 is enabled, operation will continue like before the shutdown.

- **Bit 0 – PRADC: Power Reduction ADC**

Writing a logic one to this bit shuts down the ADC. The ADC must be disabled before shut down. The analog comparator cannot be used when the ADC is shut down.

8. System Control and Reset

8.1 Resetting the AVR

During reset, all I/O Registers are set to their initial values, and the program starts execution from the Reset Vector. The instruction placed at the Reset Vector must be a RJMP – Relative Jump – instruction to the reset handling routine. If the program never enables an interrupt source, the Interrupt Vectors are not used, and regular program code can be placed at these locations. The circuit diagram in Figure 8-1 on page 35 shows the reset logic. "System and Reset Characteristics" on page 120 defines the electrical parameters of the reset circuitry.

Figure 8-1. Reset Logic

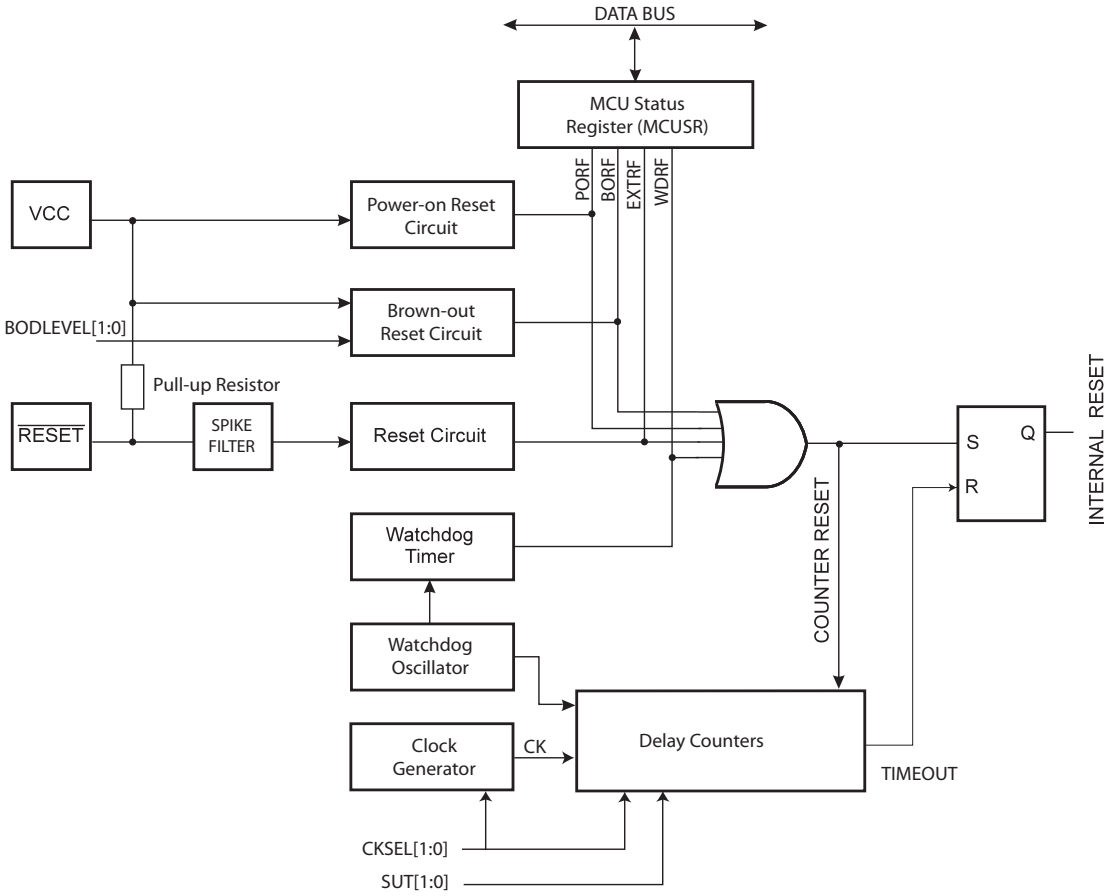

The I/O ports of the AVR are immediately reset to their initial state when a reset source goes active. This does not require any clock source to be running.

After all reset sources have gone inactive, a delay counter is invoked, stretching the internal reset. This allows the power to reach a stable level before normal operation starts. The time-out period of the delay counter is defined by the user through the SUT and CKSEL fuses. The different selections for the delay period are presented in "Clock Sources" on page 24.

8.2 Reset Sources

The ATtiny13A has four sources of reset:

- Power-on Reset. The MCU is reset when the supply voltage is below the Power-on Reset threshold (V_{POT}).
- External Reset. The MCU is reset when a low level is present on the $\overline{RESET}$ pin for longer than the minimum pulse length.
- Watchdog Reset. The MCU is reset when the Watchdog Timer period expires and the Watchdog is enabled.
- Brown-out Reset. The MCU is reset when the supply voltage V_{CC} is below the Brown-out Reset threshold (V_{BOT}) and the Brown-out Detector is enabled.

8.2.1 Power-on Reset

A Power-on Reset (POR) pulse is generated by an On-chip detection circuit. The detection level is defined in "System and Reset Characteristics" on page 120. The POR is activated whenever V_{CC} is below the detection level. The POR circuit can be used to trigger the Start-up Reset, as well as to detect a failure in supply voltage.

A Power-on Reset (POR) circuit ensures that the device is reset from Power-on. Reaching the Power-on Reset threshold voltage invokes the delay counter, which determines how long the device is kept in RESET after V_{CC} rise. The RESET signal is activated again, without any delay, when V_{CC} decreases below the detection level.

Figure 8-2. MCU Start-up, $\overline{RESET}$ Tied to V_{CC}

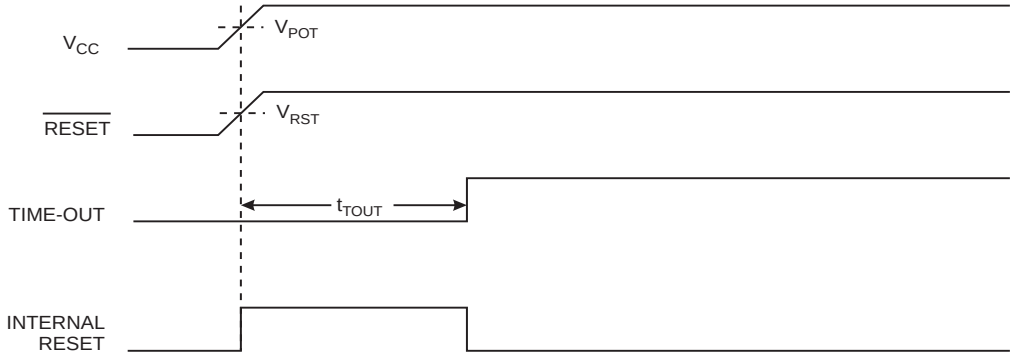

Figure 8-3. MCU Start-up, $\overline{RESET}$ Extended Externally

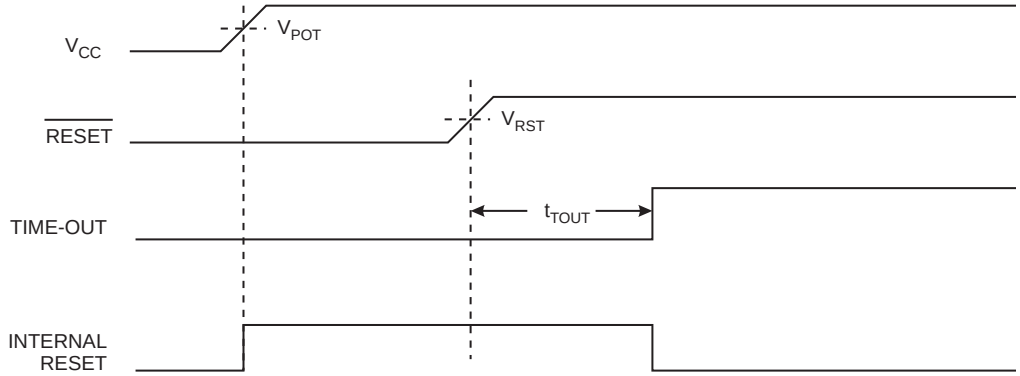

8.2.2 External Reset

An External Reset is generated by a low level on the $\overline{\text{RESET}}$ pin if enabled. Reset pulses longer than the minimum pulse width (See "System and Reset Characteristics" on page 120.) will generate a reset, even if the clock is not running. Shorter pulses are not guaranteed to generate a reset. When the applied signal reaches the Reset Threshold Voltage – V_{RST} – on its positive edge, the delay counter starts the MCU after the Time-out period – t_{TOUT} – has expired.

Figure 8-4. External Reset During Operation

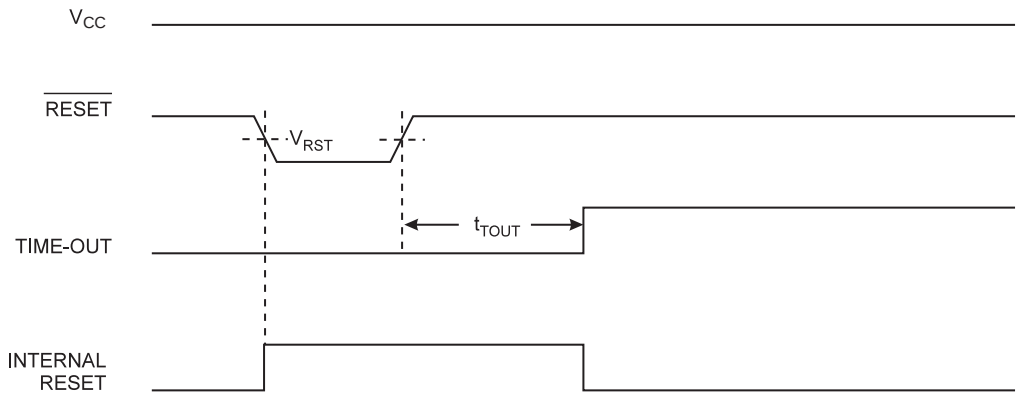

8.2.3 Brown-out Detection

ATtiny13A has an On-chip Brown-out Detection (BOD) circuit for monitoring the V_{CC} level during operation by comparing it to a fixed trigger level. The trigger level for the BOD can be selected by the BODLEVEL fuses. The trigger level has a hysteresis to ensure spike free Brown-out Detection. The hysteresis on the detection level should be interpreted as $V_{BOT+} = V_{BOT} + V_{HYST}/2$ and $V_{BOT-} = V_{BOT} - V_{HYST}/2$.

When the BOD is enabled, and V_{CC} decreases to a value below the trigger level (V_{BOT-} in Figure 8-5 on page 37), the Brown-out Reset is immediately activated. When V_{CC} increases above the trigger level (V_{BOT+} in Figure 8-5 on page 37), the delay counter starts the MCU after the Time-out period t_{TOUT} has expired.

The BOD circuit will only detect a drop in V_{CC} if the voltage stays below the trigger level for longer than t_{BOD} given in "System and Reset Characteristics" on page 120.

Figure 8-5. Brown-out Reset During Operation

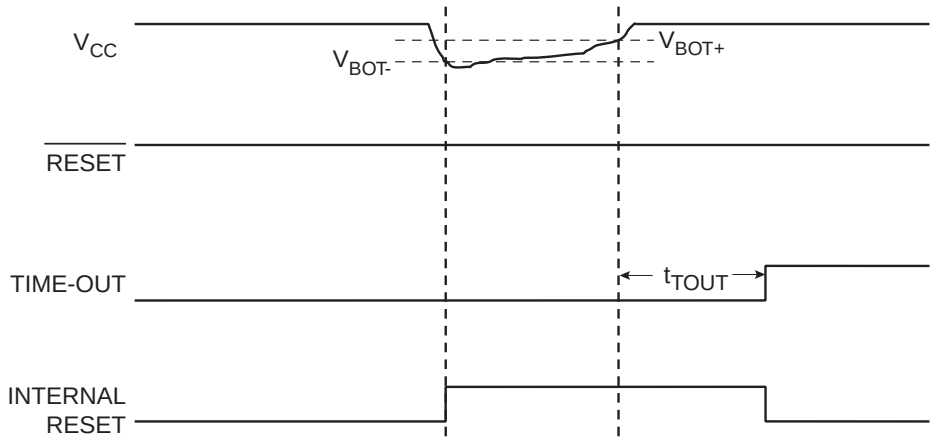

8.2.4 Watchdog Reset

When the Watchdog times out, it will generate a short reset pulse of one CK cycle duration. On the falling edge of this pulse, the delay timer starts counting the Time-out period t_{TOUT}. Refer to "Interrupts" on page 45 for details on operation of the Watchdog Timer.

Figure 8-6. Watchdog Reset During Operation

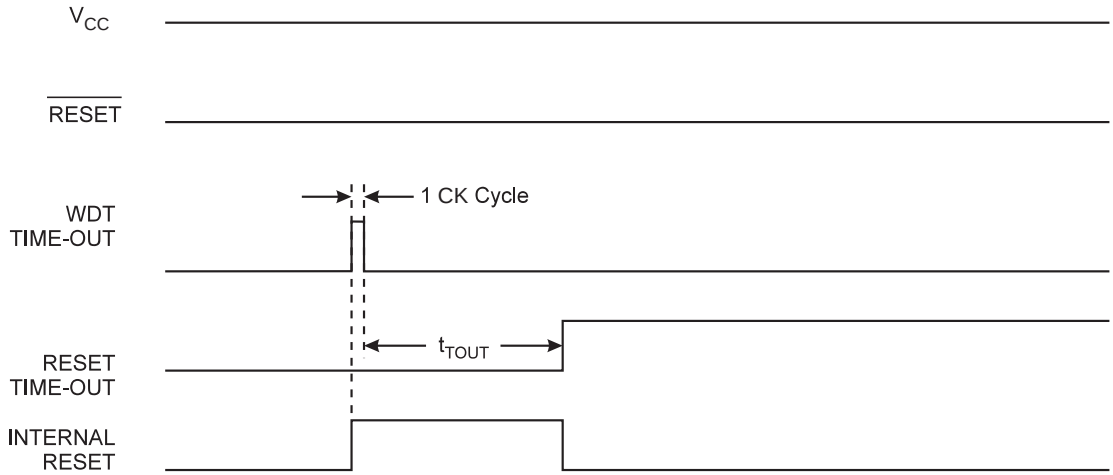

8.3 Internal Voltage Reference

ATtiny13A features an internal bandgap reference. This reference is used for Brown-out Detection, and it can be used as an input to the Analog Comparator or the ADC.

8.3.1 Voltage Reference Enable Signals and Start-up Time

The voltage reference has a start-up time that may influence the way it should be used. The start-up time is given in "System and Reset Characteristics" on page 120. To save power, the reference is not always turned on. The reference is on during the following situations:

- When the BOD is enabled (by programming the BODLEVEL[1:0] fuse).
- When the bandgap reference is connected to the Analog Comparator (by setting the ACBG bit in ACSR).
- When the ADC is enabled.

Thus, when the BOD is not enabled, after setting the ACBG bit or enabling the ADC, the user must always allow the reference to start up before the output from the Analog Comparator or ADC is used. To reduce power consumption in Power-down mode, the user can avoid the three conditions above to ensure that the reference is turned off before entering Power-down mode.

8.4 Watchdog Timer

ATtiny13A has an Enhanced Watchdog Timer (WDT). The WDT is a timer counting cycles of a separate on-chip 128 kHz oscillator. The WDT gives an interrupt or a system reset when the counter reaches a given time-out value. In normal operation mode, it is required that the system uses the WDR - Watchdog Timer Reset - instruction to restart the counter before the time-out

value is reached. If the system doesn't restart the counter, an interrupt or system reset will be issued.

Figure 8-7. Watchdog Timer

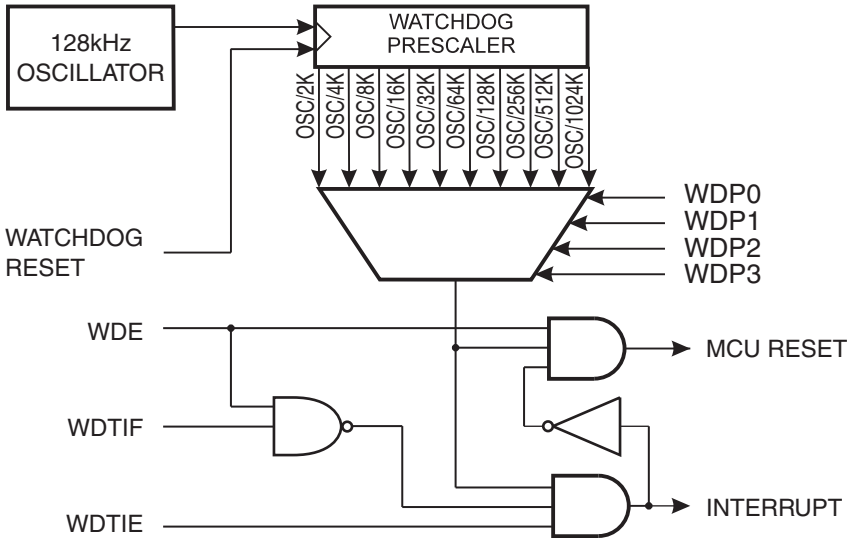

In Interrupt mode, the WDT gives an interrupt when the timer expires. This interrupt can be used to wake the device from sleep-modes, and also as a general system timer. One example is to limit the maximum time allowed for certain operations, giving an interrupt when the operation has run longer than expected. In System Reset mode, the WDT gives a reset when the timer expires. This is typically used to prevent system hang-up in case of runaway code. The third mode, Interrupt and System Reset mode, combines the other two modes by first giving an interrupt and then switch to System Reset mode. This mode will for instance allow a safe shutdown by saving critical parameters before a system reset.

The Watchdog always on (WDTON) fuse, if programmed, will force the Watchdog Timer to System Reset mode. With the fuse programmed the System Reset mode bit (WDE) and Interrupt mode bit (WDTIE) are locked to 1 and 0 respectively. To further ensure program security, alterations to the Watchdog set-up must follow timed sequences. The sequence for clearing WDE and changing time-out configuration is as follows:

1. In the same operation, write a logic one to the Watchdog change enable bit (WDCE) and WDE. A logic one must be written to WDE regardless of the previous value of the WDE bit.
2. Within the next four clock cycles, write the WDE and Watchdog prescaler bits (WDP) as desired, but with the WDCE bit cleared. This must be done in one operation.

The following code example shows one assembly and one C function for turning off the Watchdog Timer. The example assumes that interrupts are controlled (e.g. by disabling interrupts globally) so that no interrupts will occur during the execution of these functions.

Assembly Code Example

```
WDT_off:
  ; Turn off global interrupt
  cli
  ; Reset Watchdog Timer
  wdr
  ; Clear WDRF in MCUSR
  in    r16, MCUSR
  andi  r16, (0xff - (1<<WDRF))
  out   MCUSR, r16
  ; Write logical one to WDCE and WDE
  ; Keep old prescaler setting to prevent unintentional time-out
  in    r16, WDTCR
  ori   r16, (1<<WDCE) | (1<<WDE)
  out   WDTCR, r16
  ; Turn off WDT
  ldi   r16, (0<<WDE)
  out   WDTCR, r16
  ; Turn on global interrupt
  sei
  ret
```

C Code Example

```
void WDT_off(void)
{
  __disable_interrupt();
  __watchdog_reset();
  /* Clear WDRF in MCUSR */
  MCUSR &= ~(1<<WDRF);
  /* Write logical one to WDCE and WDE */
  /* Keep old prescaler setting to prevent unintentional time-out */
  WDTCR |= (1<<WDCE) | (1<<WDE);
  /* Turn off WDT */
  WDTCR = 0x00;
  __enable_interrupt();
}
```

Note: See "Code Examples" on page 6.

If the Watchdog is accidentally enabled, for example by a runaway pointer or brown-out condition, the device will be reset and the Watchdog Timer will stay enabled. If the code is not set up to handle the Watchdog, this might lead to an eternal loop of time-out resets. To avoid this situa-

tion, the application software should always clear the Watchdog System Reset Flag (WDRF) and the WDE control bit in the initialisation routine, even if the Watchdog is not in use.

The following code example shows one assembly and one C function for changing the time-out value of the Watchdog Timer.

Assembly Code Example

```
WDT_Prescaler_Change:
  ; Turn off global interrupt
  cli
  ; Reset Watchdog Timer
  wdr
  ; Start timed sequence
  in    r16, WDTCR
  ori   r16, (1<<WDCE) | (1<<WDE)
  out   WDTCR, r16
  ; --  Got four cycles to set the new values from here -
  ; Set new prescaler(time-out) value = 64K cycles (~0.5 s)
  ldi   r16, (1<<WDE) | (1<<WDP2) | (1<<WDP0)
  out   WDTCR, r16
  ; --  Finished setting new values, used 2 cycles -
  ; Turn on global interrupt
  sei
  ret
```

C Code Example

```
void WDT_Prescaler_Change(void)
{
  __disable_interrupt();
  __watchdog_reset();
  /* Start timed sequence */
  WDTCR |= (1<<WDCE) | (1<<WDE);
  /* Set new prescaler(time-out) value = 64K cycles (~0.5 s) */
  WDTCR = (1<<WDE) | (1<<WDP2) | (1<<WDP0);
  __enable_interrupt();
}
```

Note: See “Code Examples” on page 6.

The Watchdog Timer should be reset before any change of the WDP bits, since a change in the WDP bits can result in a time-out when switching to a shorter time-out period.

8.5 Register Description

8.5.1 MCUSR – MCU Status Register

The MCU Status Register provides information on which reset source caused an MCU Reset.

Bit	7	6	5	4	3	2	1	0	
0x34	–	–	–	–	WDRF	BORF	EXTRF	PORF	MCUSR
Read/Write	R	R	R	R	R/W	R/W	R/W	R/W	
Initial Value	0	0	0	0	See Bit Description				

- **Bits 7:4 – Res: Reserved Bits**

These bits are reserved bits in the ATtiny13A and will always read as zero.

- **Bit 3 – WDRF: Watchdog Reset Flag**

This bit is set if a Watchdog Reset occurs. The bit is reset by a Power-on Reset, or by writing a logic zero to the flag.

- **Bit 2 – BORF: Brown-out Reset Flag**

This bit is set if a Brown-out Reset occurs. The bit is reset by a Power-on Reset, or by writing a logic zero to the flag.

- **Bit 1 – EXTRF: External Reset Flag**

This bit is set if an External Reset occurs. The bit is reset by a Power-on Reset, or by writing a logic zero to the flag.

- **Bit 0 – PORF: Power-on Reset Flag**

This bit is set if a Power-on Reset occurs. The bit is reset only by writing a logic zero to the flag.

To make use of the Reset Flags to identify a reset condition, the user should read and then reset the MCUSR as early as possible in the program. If the register is cleared before another reset occurs, the source of the reset can be found by examining the Reset Flags.

8.5.2 WDTCR – Watchdog Timer Control Register

Bit	7	6	5	4	3	2	1	0	
0x21	WDTIF	WDTIE	WDP3	WDCE	WDE	WDP2	WDP1	WDP0	WDTCR
Read/Write	R/W	R/W	R/W	R/W	R/W	R/W	R/W	R/W	
Initial Value	0	0	0	0	X	0	0	0	

- **Bit 7 – WDTIF: Watchdog Timer Interrupt Flag**

This bit is set when a time-out occurs in the Watchdog Timer and the Watchdog Timer is configured for interrupt. WDTIF is cleared by hardware when executing the corresponding interrupt handling vector. Alternatively, WDTIF is cleared by writing a logic one to the flag. When the I-bit in SREG and WDTIE are set, the Watchdog Time-out Interrupt is executed.

- **Bit 6 – WDTIE: Watchdog Timer Interrupt Enable**

When this bit is written to one and the I-bit in the Status Register is set, the Watchdog Interrupt is enabled. If WDE is cleared in combination with this setting, the Watchdog Timer is in Interrupt Mode, and the corresponding interrupt is executed if time-out in the Watchdog Timer occurs.

If WDE is set, the Watchdog Timer is in Interrupt and System Reset Mode. The first time-out in the Watchdog Timer will set WDTIF. Executing the corresponding interrupt vector will clear WDTIE and WDTIF automatically by hardware (the Watchdog goes to System Reset Mode).

This is useful for keeping the Watchdog Timer security while using the interrupt. To stay in Interrupt and System Reset Mode, WDTIE must be set after each interrupt. This should however not be done within the interrupt service routine itself, as this might compromise the safety-function of the Watchdog System Reset mode. If the interrupt is not executed before the next time-out, a System Reset will be applied.

Table 8-1. Watchdog Timer Configuration

WDTON[(1)]	WDE	WDTIE	Mode	Action on Time-out
1	0	0	Stopped	None
1	0	1	Interrupt Mode	Interrupt
1	1	0	System Reset Mode	Reset
1	1	1	Interrupt and System Reset Mode	Interrupt, then go to System Reset Mode
0	x	x	System Reset Mode	Reset

Note: 1. WDTON fuse set to “0“ means programmed and “1“ means unprogrammed.

- **Bit 4 – WDCE: Watchdog Change Enable**

This bit is used in timed sequences for changing WDE and prescaler bits. To clear the WDE bit, and/or change the prescaler bits, WDCE must be set.

Once written to one, hardware will clear WDCE after four clock cycles.

- **Bit 3 – WDE: Watchdog System Reset Enable**

WDE is overridden by WDRF in MCUSR. This means that WDE is always set when WDRF is set. To clear WDE, WDRF must be cleared first. This feature ensures multiple resets during conditions causing failure, and a safe start-up after the failure.

- **Bit 5, 2:0 – WDP[3:0]: Watchdog Timer Prescaler 3, 2, 1 and 0**

The WDP[3:0] bits determine the Watchdog Timer prescaling when the Watchdog Timer is running. The different prescaling values and their corresponding time-out periods are shown in Table 8-2 on page 43.

Table 8-2. Watchdog Timer Prescale Select

WDP3	WDP2	WDP1	WDP0	Number of WDT Oscillator Cycles	Typical Time-out at V_{CC} = 5.0V
0	0	0	0	2K (2048) cycles	16 ms
0	0	0	1	4K (4096) cycles	32 ms
0	0	1	0	8K (8192) cycles	64 ms
0	0	1	1	16K (16384) cycles	0.125 s
0	1	0	0	32K (32768) cycles	0.25 s
0	1	0	1	64K (65536) cycles	0.5 s
0	1	1	0	128K (131072) cycles	1.0 s
0	1	1	1	256K (262144) cycles	2.0 s
1	0	0	0	512K (524288) cycles	4.0 s
1	0	0	1	1024K (1048576) cycles	8.0 s

Table 8-2. Watchdog Timer Prescale Select (Continued)

WDP3	WDP2	WDP1	WDP0	Number of WDT Oscillator Cycles	Typical Time-out at V_{CC} = 5.0V
1	0	1	0	Reserved	
1	0	1	1		
1	1	0	0		
1	1	0	1		
1	1	1	0		
1	1	1	1		

9. Interrupts

This section describes the specifics of the interrupt handling as performed in ATtiny13A. For a general explanation of the AVR interrupt handling, refer to "Reset and Interrupt Handling" on page 12.

9.1 Interrupt Vectors

The interrupt vectors of ATtiny13A are described in Table 9-1 below.

Table 9-1. Reset and Interrupt Vectors

Vector No.	Program Address	Source	Interrupt Definition
1	0x0000	RESET	External Pin, Power-on Reset, Brown-out Reset, Watchdog Reset
2	0x0001	INT0	External Interrupt Request 0
3	0x0002	PCINT0	Pin Change Interrupt Request 0
4	0x0003	TIM0_OVF	Timer/Counter Overflow
5	0x0004	EE_RDY	EEPROM Ready
6	0x0005	ANA_COMP	Analog Comparator
7	0x0006	TIM0_COMPA	Timer/Counter Compare Match A
8	0x0007	TIM0_COMPB	Timer/Counter Compare Match B
9	0x0008	WDT	Watchdog Time-out
10	0x0009	ADC	ADC Conversion Complete

If the program never enables an interrupt source, the Interrupt Vectors are not used, and regular program code can be placed at these locations.

The most typical and general program setup for the Reset and Interrupt Vector Addresses in ATtiny13A is:

```
Address  Labels Code                    Comments
0x0000          rjmp   RESET            ; Reset Handler
0x0001          rjmp   EXT_INT0         ; IRQ0 Handler
0x0002          rjmp   PCINT0           ; PCINT0 Handler
0x0003          rjmp   TIM0_OVF         ; Timer0 Overflow Handler
0x0004          rjmp   EE_RDY           ; EEPROM Ready Handler
0x0005          rjmp   ANA_COMP         ; Analog Comparator Handler
0x0006          rjmp   TIM0_COMPA       ; Timer0 CompareA Handler
0x0007          rjmp   TIM0_COMPB       ; Timer0 CompareB Handler
0x0008          rjmp   WATCHDOG         ; Watchdog Interrupt Handler
0x0009          rjmp   ADC              ; ADC Conversion Handler
;
0x000A   RESET: ldi    r16, low(RAMEND); Main program start
0x000B    out    SPL,r16               ; Set Stack Pointer to top of RAM
0x000C          sei                    ; Enable interrupts
0x000D    <instr>  xxx
  ...     ...     ...  ...
```

9.2 External Interrupts

The External Interrupts are triggered by the INT0 pin or any of the PCINT[5:0] pins. Observe that, if enabled, the interrupts will trigger even if the INT0 or PCINT[5:0] pins are configured as outputs. This feature provides a way of generating a software interrupt. Pin change interrupts PCI will trigger if any enabled PCINT[5:0] pin toggles. The PCMSK Register control which pins contribute to the pin change interrupts. Pin change interrupts on PCINT[5:0] are detected asynchronously. This implies that these interrupts can be used for waking the part also from sleep modes other than Idle mode.

The INT0 interrupts can be triggered by a falling or rising edge or a low level. This is set up as indicated in the specification for the MCU Control Register – MCUCR. When the INT0 interrupt is enabled and is configured as level triggered, the interrupt will trigger as long as the pin is held low. Note that recognition of falling or rising edge interrupts on INT0 requires the presence of an I/O clock, described in “Clock Systems and their Distribution” on page 23.

9.2.1 Low Level Interrupt

A low level interrupt on INT0 is detected asynchronously. This implies that this interrupt can be used for waking the part also from sleep modes other than Idle mode. The I/O clock is halted in all sleep modes except Idle mode.

Note that if a level triggered interrupt is used for wake-up from Power-down, the required level must be held long enough for the MCU to complete the wake-up to trigger the level interrupt. If the level disappears before the end of the Start-up Time, the MCU will still wake up, but no interrupt will be generated. The start-up time is defined by the SUT and CKSEL fuses as described in “System Clock and Clock Options” on page 23.

If the low level on the interrupt pin is removed before the device has woken up then program execution will not be diverted to the interrupt service routine but continue from the instruction following the SLEEP command.

9.2.2 Pin Change Interrupt Timing

An example of timing of a pin change interrupt is shown in Figure 9-1 below.

Figure 9-1. Timing of pin change interrupts

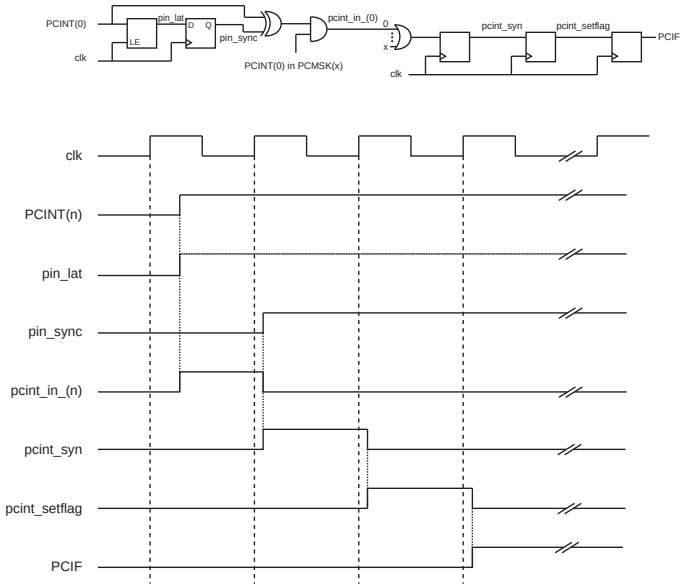

9.3 Register Description

9.3.1 MCUCR – MCU Control Register

The External Interrupt Control Register A contains control bits for interrupt sense control.

Bit	7	6	5	4	3	2	1	0	
0x35	–	PUD	SE	SM1	SM0	–	ISC01	ISC00	MCUCR
Read/Write	R	R/W	R/W	R/W	R/W	R	R/W	R/W	
Initial Value	0	0	0	0	0	0	0	0	

- **Bits 1:0 – ISC0[1:0]: Interrupt Sense Control 0 Bit 1 and Bit 0**

The External Interrupt 0 is activated by the external pin INT0 if the SREG I-flag and the corresponding interrupt mask are set. The level and edges on the external INT0 pin that activate the interrupt are defined in Table 9-2 on page 47. The value on the INT0 pin is sampled before detecting edges. If edge or toggle interrupt is selected, pulses that last longer than one clock period will generate an interrupt. Shorter pulses are not guaranteed to generate an interrupt. If low level interrupt is selected, the low level must be held until the completion of the currently executing instruction to generate an interrupt.

Table 9-2. Interrupt 0 Sense Control

ISC01	ISC00	Description
0	0	The low level of INT0 generates an interrupt request.
0	1	Any logical change on INT0 generates an interrupt request.
1	0	The falling edge of INT0 generates an interrupt request.
1	1	The rising edge of INT0 generates an interrupt request.

9.3.2 GIMSK – General Interrupt Mask Register

Bit	7	6	5	4	3	2	1	0	
0x3B	–	INT0	PCIE	–	–	–	–	–	GIMSK
Read/Write	R	R/W	R/W	R	R	R	R	R	
Initial Value	0	0	0	0	0	0	0	0	

- **Bits 7, 4:0 – Res: Reserved Bits**

These bits are reserved bits in the ATtiny13A and will always read as zero.

- **Bit 6 – INT0: External Interrupt Request 0 Enable**

When the INT0 bit is set (one) and the I-bit in the Status Register (SREG) is set (one), the external pin interrupt is enabled. The Interrupt Sense Control0 bits 1/0 (ISC01 and ISC00) in the MCU Control Register (MCUCR) define whether the external interrupt is activated on rising and/or falling edge of the INT0 pin or level sensed. Activity on the pin will cause an interrupt request even if INT0 is configured as an output. The corresponding interrupt of External Interrupt Request 0 is executed from the INT0 Interrupt Vector.

- **Bit 5 – PCIE: Pin Change Interrupt Enable**

When the PCIE bit is set (one) and the I-bit in the Status Register (SREG) is set (one), pin change interrupt is enabled. Any change on any enabled PCINT[5:0] pin will cause an interrupt. The corresponding interrupt of Pin Change Interrupt Request is executed from the PCI Interrupt Vector. PCINT[5:0] pins are enabled individually by the PCMSK Register.

9.3.3 GIFR – General Interrupt Flag Register

Bit	7	6	5	4	3	2	1	0	
0x3A	–	INTF0	PCIF	–	–	–	–	–	GIFR
Read/Write	R	R/W	R/W	R	R	R	R	R	
Initial Value	0	0	0	0	0	0	0	0	

- **Bits 7, 4:0 – Res: Reserved Bits**

These bits are reserved bits in the ATtiny13A and will always read as zero.

- **Bit 6 – INTF0: External Interrupt Flag 0**

When an edge or logic change on the INT0 pin triggers an interrupt request, INTF0 becomes set (one). If the I-bit in SREG and the INT0 bit in GIMSK are set (one), the MCU will jump to the corresponding Interrupt Vector. The flag is cleared when the interrupt routine is executed. Alternatively, the flag can be cleared by writing a logical one to it. This flag is always cleared when INT0 is configured as a level interrupt.

- **Bit 5 – PCIF: Pin Change Interrupt Flag**

When a logic change on any PCINT[5:0] pin triggers an interrupt request, PCIF becomes set (one). If the I-bit in SREG and the PCIE bit in GIMSK are set (one), the MCU will jump to the corresponding Interrupt Vector. The flag is cleared when the interrupt routine is executed. Alternatively, the flag can be cleared by writing a logical one to it.

9.3.4 PCMSK – Pin Change Mask Register

Bit	7	6	5	4	3	2	1	0	
0x15	–	–	PCINT5	PCINT4	PCINT3	PCINT2	PCINT1	PCINT0	PCMSK
Read/Write	R	R	R/W	R/W	R/W	R/W	R/W	R/W	
Initial Value	0	0	0	0	0	0	0	0	

- **Bits 7:6 – Res: Reserved Bits**

These bits are reserved bits in the ATtiny13A and will always read as zero.

- **Bits 5:0 – PCINT[5:0]: Pin Change Enable Mask 5:0**

Each PCINT[5:0] bit selects whether pin change interrupt is enabled on the corresponding I/O pin. If PCINT[5:0] is set and the PCIE bit in GIMSK is set, pin change interrupt is enabled on the corresponding I/O pin. If PCINT[5:0] is cleared, pin change interrupt on the corresponding I/O pin is disabled.

10. I/O Ports

10.1 Overview

All AVR ports have true Read-Modify-Write functionality when used as general digital I/O ports. This means that the direction of one port pin can be changed without unintentionally changing the direction of any other pin with the SBI and CBI instructions. The same applies when changing drive value (if configured as output) or enabling/disabling of pull-up resistors (if configured as input). Each output buffer has symmetrical drive characteristics with both high sink and source capability. The pin driver is strong enough to drive LED displays directly. All port pins have individually selectable pull-up resistors with a supply-voltage invariant resistance. All I/O pins have protection diodes to both V_{CC} and Ground as indicated in Figure 10-1. Refer to "Electrical Characteristics" on page 117 for a complete list of parameters.

Figure 10-1. I/O Pin Equivalent Schematic

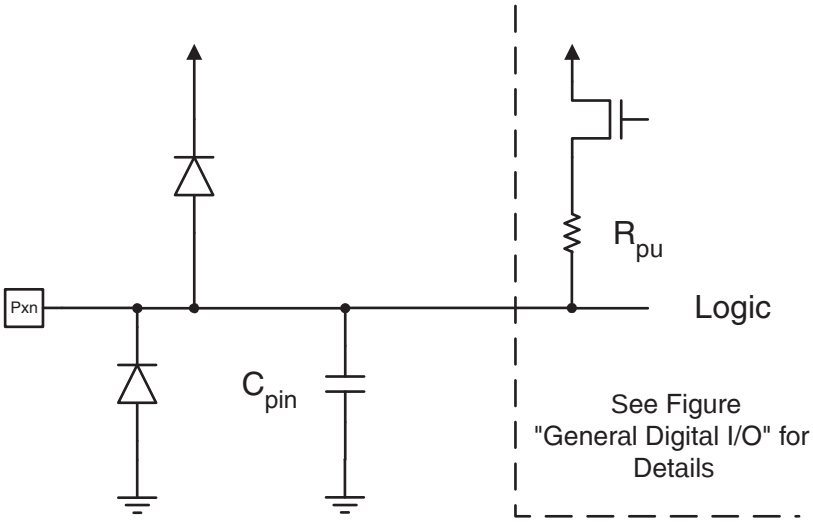

All registers and bit references in this section are written in general form. A lower case "x" represents the numbering letter for the port, and a lower case "n" represents the bit number. However, when using the register or bit defines in a program, the precise form must be used. For example, PORTB3 for bit no. 3 in Port B, here documented generally as PORTxn. The physical I/O Registers and bit locations are listed in "Register Description" on page 57.

Three I/O memory address locations are allocated for each port, one each for the Data Register – PORTx, Data Direction Register – DDRx, and the Port Input Pins – PINx. The Port Input Pins I/O location is read only, while the Data Register and the Data Direction Register are read/write. However, writing a logic one to a bit in the PINx Register, will result in a toggle in the corresponding bit in the Data Register. In addition, the Pull-up Disable – PUD bit in MCUCR disables the pull-up function for all pins in all ports when set.

Using the I/O port as General Digital I/O is described in "Ports as General Digital I/O" on page 50. Most port pins are multiplexed with alternate functions for the peripheral features on the device. How each alternate function interferes with the port pin is described in "Alternate Port Functions" on page 54. Refer to the individual module sections for a full description of the alternate functions.

Note that enabling the alternate function of some of the port pins does not affect the use of the other pins in the port as general digital I/O.

10.2 Ports as General Digital I/O

The ports are bi-directional I/O ports with optional internal pull-ups. Figure 10-2 on page 50 shows a functional description of one I/O-port pin, here generically called Pxn.

Figure 10-2. General Digital I/O[1]

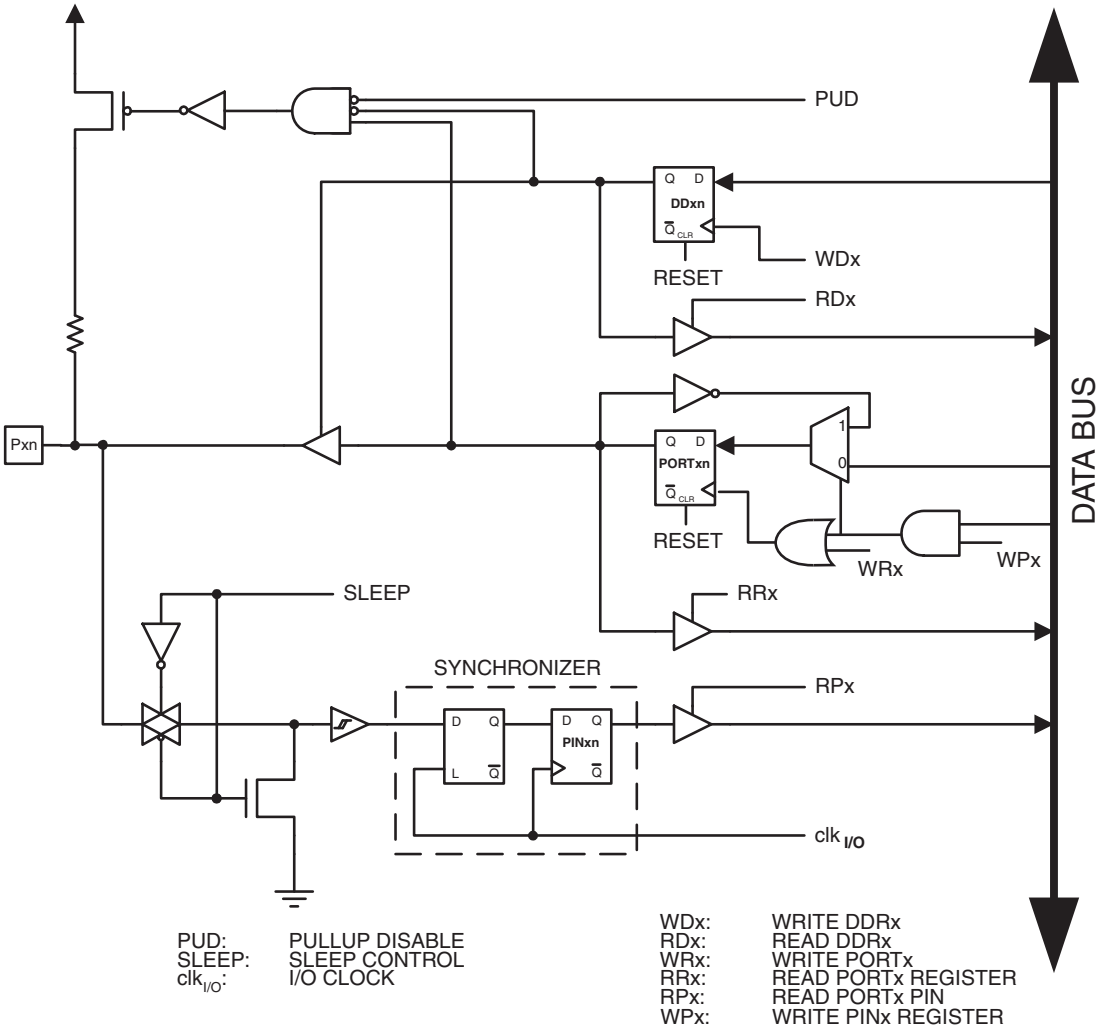

Note: 1. WRx, WPx, WDx, RRx, RPx, and RDx are common to all pins within the same port. $clk_{I/O}$, SLEEP, and PUD are common to all ports.

10.2.1 Configuring the Pin

Each port pin consists of three register bits: DDxn, PORTxn, and PINxn. As shown in "Register Description" on page 57, the DDxn bits are accessed at the DDRx I/O address, the PORTxn bits at the PORTx I/O address, and the PINxn bits at the PINx I/O address.

The DDxn bit in the DDRx Register selects the direction of this pin. If DDxn is written logic one, Pxn is configured as an output pin. If DDxn is written logic zero, Pxn is configured as an input pin.

If PORTxn is written logic one when the pin is configured as an input pin, the pull-up resistor is activated. To switch the pull-up resistor off, PORTxn has to be written logic zero or the pin has to be configured as an output pin. The port pins are tri-stated when reset condition becomes active, even if no clocks are running.

If PORTxn is written logic one when the pin is configured as an output pin, the port pin is driven high (one). If PORTxn is written logic zero when the pin is configured as an output pin, the port pin is driven low (zero).

10.2.2 Toggling the Pin

Writing a logic one to PINxn toggles the value of PORTxn, independent on the value of DDRxn. Note that the SBI instruction can be used to toggle one single bit in a port.

10.2.3 Switching Between Input and Output

When switching between tri-state ({DDxn, PORTxn} = 0b00) and output high ({DDxn, PORTxn} = 0b11), an intermediate state with either pull-up enabled {DDxn, PORTxn} = 0b01) or output low ({DDxn, PORTxn} = 0b10) must occur. Normally, the pull-up enabled state is fully acceptable, as a high-impedant environment will not notice the difference between a strong high driver and a pull-up. If this is not the case, the PUD bit in the MCUCR Register can be set to disable all pull-ups in all ports.

Switching between input with pull-up and output low generates the same problem. The user must use either the tri-state ({DDxn, PORTxn} = 0b00) or the output high state ({DDxn, PORTxn} = 0b10) as an intermediate step.

Table 10-1 summarizes the control signals for the pin value.

Table 10-1. Port Pin Configurations

DDxn	PORTxn	PUD (in MCUCR)	I/O	Pull-up	Comment
0	0	X	Input	No	Tri-state (Hi-Z)
0	1	0	Input	Yes	Pxn will source current if ext. pulled low.
0	1	1	Input	No	Tri-state (Hi-Z)
1	0	X	Output	No	Output Low (Sink)
1	1	X	Output	No	Output High (Source)

10.2.4 Reading the Pin Value

Independent of the setting of Data Direction bit DDxn, the port pin can be read through the PINxn Register bit. As shown in Figure 10-2 on page 50, the PINxn Register bit and the preceding latch constitute a synchronizer. This is needed to avoid metastability if the physical pin changes value near the edge of the internal clock, but it also introduces a delay. Figure 10-3 on page 52 shows a timing diagram of the synchronization when reading an externally applied pin value. The maximum and minimum propagation delays are denoted $t_{pd,max}$ and $t_{pd,min}$ respectively.

Figure 10-3. Synchronization when Reading an Externally Applied Pin value

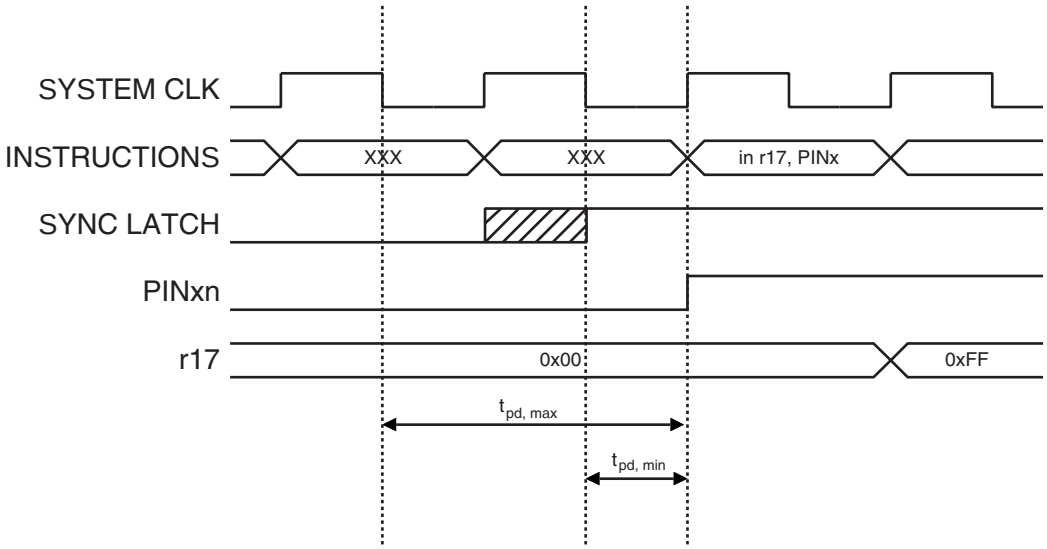

Consider the clock period starting shortly after the first falling edge of the system clock. The latch is closed when the clock is low, and goes transparent when the clock is high, as indicated by the shaded region of the “SYNC LATCH” signal. The signal value is latched when the system clock goes low. It is clocked into the PINxn Register at the succeeding positive clock edge. As indicated by the two arrows tpd,max and tpd,min, a single signal transition on the pin will be delayed between ½ and 1½ system clock period depending upon the time of assertion.

When reading back a software assigned pin value, a nop instruction must be inserted as indicated in Figure 10-4 on page 52. The out instruction sets the “SYNC LATCH” signal at the positive edge of the clock. In this case, the delay tpd through the synchronizer is one system clock period.

Figure 10-4. Synchronization when Reading a Software Assigned Pin Value

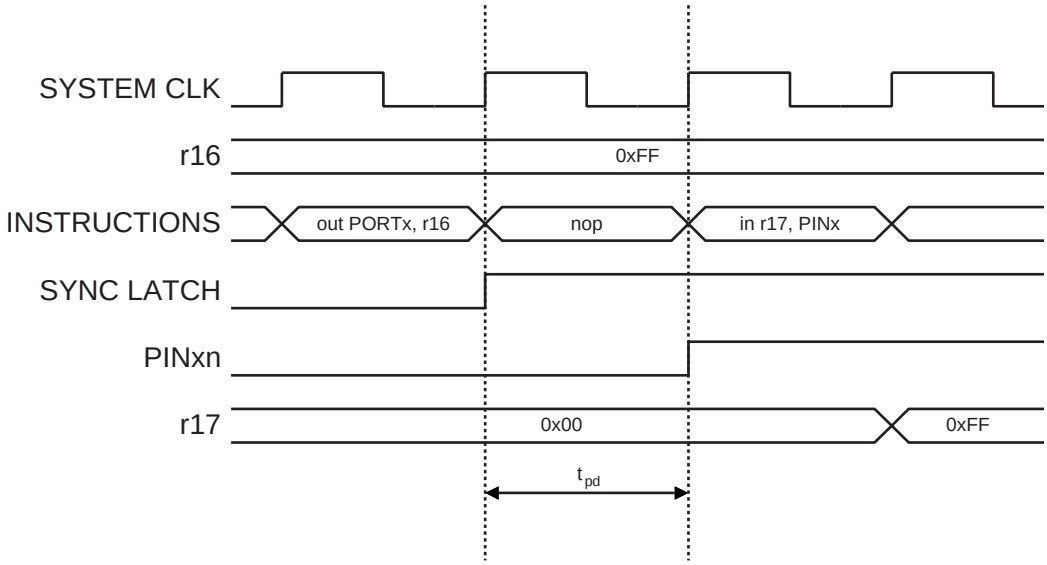

The following code example shows how to set port B pins 0 and 1 high, 2 and 3 low, and define the port pins from 4 to 5 as input with a pull-up assigned to port pin 4. The resulting pin values are read back again, but as previously discussed, a nop instruction is included to be able to read back the value recently assigned to some of the pins.

Assembly Code Example[1]

```
...
; Define pull-ups and set outputs high
; Define directions for port pins
ldi  r16,(1<<PB4)|(1<<PB1)|(1<<PB0)
ldi  r17,(1<<DDB3)|(1<<DDB2)|(1<<DDB1)|(1<<DDB0)
out  PORTB,r16
out  DDRB,r17
; Insert nop for synchronization
nop
; Read port pins
in   r16,PINB
...
```

C Code Example

```
unsigned char i;
...
/* Define pull-ups and set outputs high */
/* Define directions for port pins */
PORTB = (1<<PB4)|(1<<PB1)|(1<<PB0);
DDRB = (1<<DDB3)|(1<<DDB2)|(1<<DDB1)|(1<<DDB0);
/* Insert nop for synchronization*/
__no_operation();
/* Read port pins */
i = PINB;
...
```

Note: 1. For the assembly program, two temporary registers are used to minimize the time from pull-ups are set on pins 0, 1 and 4, until the direction bits are correctly set, defining bit 2 and 3 as low and redefining bits 0 and 1 as strong high drivers.

Note: See "Code Examples" on page 6.

10.2.5 Digital Input Enable and Sleep Modes

As shown in Figure 10-2 on page 50, the digital input signal can be clamped to ground at the input of the schmitt-trigger. The signal denoted SLEEP in the figure, is set by the MCU Sleep Controller in Power-down mode, Power-save mode, and Standby mode to avoid high power consumption if some input signals are left floating, or have an analog signal level close to $V_{CC}/2$.

SLEEP is overridden for port pins enabled as external interrupt pins. If the external interrupt request is not enabled, SLEEP is active also for these pins. SLEEP is also overridden by various other alternate functions as described in "Alternate Port Functions" on page 54.

If a logic high level ("one") is present on an asynchronous external interrupt pin configured as "Interrupt on Rising Edge, Falling Edge, or Any Logic Change on Pin" while the external interrupt is *not* enabled, the corresponding External Interrupt Flag will be set when resuming from the above mentioned Sleep mode, as the clamping in these sleep mode produces the requested logic change.

10.2.6 Unconnected Pins

If some pins are unused, it is recommended to ensure that these pins have a defined level. Even though most of the digital inputs are disabled in the deep sleep modes as described above, floating inputs should be avoided to reduce current consumption in all other modes where the digital inputs are enabled (Reset, Active mode and Idle mode).

The simplest method to ensure a defined level of an unused pin, is to enable the internal pull-up. In this case, the pull-up will be disabled during reset. If low power consumption during reset is important, it is recommended to use an external pull-up or pull-down. Connecting unused pins directly to V_{CC} or GND is not recommended, since this may cause excessive currents if the pin is accidentally configured as an output.

10.3 Alternate Port Functions

Most port pins have alternate functions in addition to being general digital I/Os. Figure 10-5 shows how port pin control signals from the simplified Figure 10-2 on page 50 can be overridden by alternate functions.

Figure 10-5. Alternate Port Functions

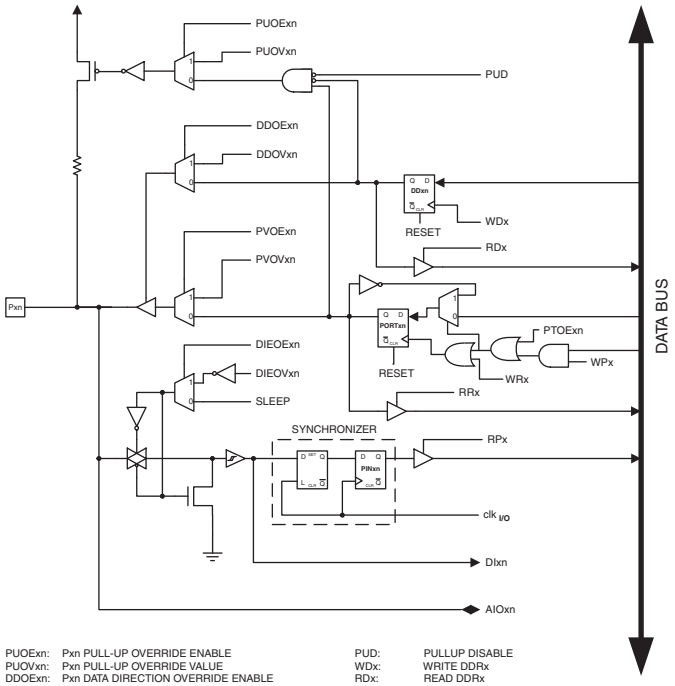

PUOExn:	Pxn PULL-UP OVERRIDE ENABLE	PUD:	PULLUP DISABLE
PUOVxn:	Pxn PULL-UP OVERRIDE VALUE	WDx:	WRITE DDRx
DDOExn:	Pxn DATA DIRECTION OVERRIDE ENABLE	RDx:	READ DDRx
DDOVxn:	Pxn DATA DIRECTION OVERRIDE VALUE	RRx:	READ PORTx REGISTER
PVOExn:	Pxn PORT VALUE OVERRIDE ENABLE	WRx:	WRITE PORTx
PVOVxn:	Pxn PORT VALUE OVERRIDE VALUE	RPx:	READ PORTx PIN
DIEOExn:	Pxn DIGITAL INPUT-ENABLE OVERRIDE ENABLE	WPx:	WRITE PINx
DIEOVxn:	Pxn DIGITAL INPUT-ENABLE OVERRIDE VALUE	$clk_{I/O}$:	I/O CLOCK
SLEEP:	SLEEP CONTROL	DIxn:	DIGITAL INPUT PIN n ON PORTx
PTOExn:	Pxn, PORT TOGGLE OVERRIDE ENABLE	AIOxn:	ANALOG INPUT/OUTPUT PIN n ON PORTx

Note: WRx, WPx, WDx, RRx, RPx, and RDx are common to all pins within the same port. $clk_{I/O}$, SLEEP, and PUD are common to all ports. All other signals are unique for each pin.

The overriding signals may not be present in all port pins, but Figure 10-5 serves as a generic description applicable to all port pins in the AVR microcontroller family.

Table 10-2 on page 55 summarizes the function of the overriding signals. The pin and port indexes from Figure 10-5 on page 54 are not shown in the succeeding tables. The overriding signals are generated internally in the modules having the alternate function.

Table 10-2. Generic Description of Overriding Signals for Alternate Functions

Signal Name	Full Name	Description
PUOE	Pull-up Override Enable	If this signal is set, the pull-up enable is controlled by the PUOV signal. If this signal is cleared, the pull-up is enabled when {DDxn, PORTxn, PUD} = 0b010.
PUOV	Pull-up Override Value	If PUOE is set, the pull-up is enabled/disabled when PUOV is set/cleared, regardless of the setting of the DDxn, PORTxn, and PUD Register bits.
DDOE	Data Direction Override Enable	If this signal is set, the Output Driver Enable is controlled by the DDOV signal. If this signal is cleared, the Output driver is enabled by the DDxn Register bit.
DDOV	Data Direction Override Value	If DDOE is set, the Output Driver is enabled/disabled when DDOV is set/cleared, regardless of the setting of the DDxn Register bit.
PVOE	Port Value Override Enable	If this signal is set and the Output Driver is enabled, the port value is controlled by the PVOV signal. If PVOE is cleared, and the Output Driver is enabled, the port Value is controlled by the PORTxn Register bit.
PVOV	Port Value Override Value	If PVOE is set, the port value is set to PVOV, regardless of the setting of the PORTxn Register bit.
PTOE	Port Toggle Override Enable	If PTOE is set, the PORTxn Register bit is inverted.
DIEOE	Digital Input Enable Override Enable	If this bit is set, the Digital Input Enable is controlled by the DIEOV signal. If this signal is cleared, the Digital Input Enable is determined by MCU state (Normal mode, sleep mode).
DIEOV	Digital Input Enable Override Value	If DIEOE is set, the Digital Input is enabled/disabled when DIEOV is set/cleared, regardless of the MCU state (Normal mode, sleep mode).
DI	Digital Input	This is the Digital Input to alternate functions. In the figure, the signal is connected to the output of the schmitt-trigger but before the synchronizer. Unless the Digital Input is used as a clock source, the module with the alternate function will use its own synchronizer.
AIO	Analog Input/Output	This is the Analog Input/Output to/from alternate functions. The signal is connected directly to the pad, and can be used bi-directionally.

The following subsections shortly describe the alternate functions for each port, and relate the overriding signals to the alternate function. Refer to the alternate function description for further details.

10.3.1 Alternate Functions of Port B

The Port B pins with alternate function are shown in Table 10-3 on page 56.

Table 10-3. Port B Pins Alternate Functions

Port Pin	Alternate Function
PB5	$\overline{\text{RESET}}$: Reset Pin dW: debugWIRE I/O ADC0: ADC Input Channel 0 PCINT5: Pin Change Interrupt, Source 5
PB4	ADC2: ADC Input Channel 2 PCINT4: Pin Change Interrupt 0, Source 4
PB3	CLKI: External Clock Input ADC3: ADC Input Channel 3 PCINT3: Pin Change Interrupt 0, Source 3
PB2	SCK: Serial Clock Input ADC1: ADC Input Channel 1 T0: Timer/Counter0 Clock Source. PCINT2: Pin Change Interrupt 0, Source 2
PB1	MISO: SPI Master Data Input / Slave Data Output AIN1: Analog Comparator, Negative Input OC0B: Timer/Counter0 Compare Match B Output INT0: External Interrupt 0 Input PCINT1:Pin Change Interrupt 0, Source 1
PB0	MOSI:: SPI Master Data Output / Slave Data Input AIN0: Analog Comparator, Positive Input OC0A: Timer/Counter0 Compare Match A output PCINT0: Pin Change Interrupt 0, Source 0

Table 10-4 and Table 10-5 relate the alternate functions of Port B to the overriding signals shown in Figure 10-5 on page 54.

Table 10-4. Overriding Signals for Alternate Functions in PB[5:3]

Signal	PB5/RESET/ADC0/PCINT5	PB4/ADC2/PCINT4	PB3/ADC3/CLKI/PCINT3
PUOE	$\overline{\text{RSTDISBL}}$(1) • DWEN(1)	0	0
PUOV	1	0	0
DDOE	RSTDISBL(1) • DWEN(1)	0	0
DDOV	debugWire Transmit	0	0
PVOE	0	0	0
PVOV	0	0	0
PTOE	0	0	0
DIEOE	$\overline{\text{RSTDISBL}}$(1) + (PCINT5 • PCIE + ADC0D)	PCINT4 • PCIE + ADC2D	PCINT3 • PCIE + ADC3D
DIEOV	ADC0D	ADC2D	ADC3D
DI	PCINT5 Input	PCINT4 Input	PCINT3 Input
AIO	RESET Input, ADC0 Input	ADC2 Input	ADC3 Input

Note: 1. 1 when the fuse is “0” (Programmed).

Table 10-5. Overriding Signals for Alternate Functions in PB[2:0]

Signal Name	PB2/SCK/ADC1/ T0/PCINT2	PB1/MISO/AIN1/ OC0B/INT0/PCINT1	PB0/MOSI/AIN0/ AREF/OC0A/PCINT0
PUOE	0	0	0
PUOV	0	0	0
DDOE	0	0	0
DDOV	0	0	0
PVOE	0	OC0B Enable	OC0A Enable
PVOV	0	OC0B	OC0A
PTOE	0	0	0
DIEOE	PCINT2 • PCIE + ADC1D	PCINT1 • PCIE + AIN1D	PCINT0 • PCIE + AIN0D
DIEOV	ADC1D	AIN1D	AIN0D
DI	T0/PCINT2 Input	INT0/PCINT1 Input	PCINT0 Input
AIO	ADC1 Input	Analog Comparator Negative Input	Analog Comparator Positive Input

10.4 Register Description

10.4.1 MCUCR – MCU Control Register

Bit	7	6	5	4	3	2	1	0	
0x35	–	PUD	SE	SM1	SM0	–	ISC01	ISC00	MCUCR
Read/Write	R	R/W	R/W	R/W	R/W	R	R/W	R/W	
Initial Value	0	0	0	0	0	0	0	0	

- **Bits 7, 2 – Res: Reserved Bits**

These bits are reserved bits in the ATtiny13A and will always read as zero.

- **Bit 6 – PUD: Pull-up Disable**

When this bit is written to one, the pull-ups in the I/O ports are disabled even if the DDxn and PORTxn Registers are configured to enable the pull-ups ({DDxn, PORTxn} = 0b01). See "Configuring the Pin" on page 50 for more details about this feature.

10.4.2 PORTB – Port B Data Register

Bit	7	6	5	4	3	2	1	0	
0x18	–	–	PORTB5	PORTB4	PORTB3	PORTB2	PORTB1	PORTB0	PORTB
Read/Write	R	R	R/W	R/W	R/W	R/W	R/W	R/W	
Initial Value	0	0	0	0	0	0	0	0	

10.4.3 DDRB – Port B Data Direction Register

Bit	7	6	5	4	3	2	1	0	
0x17	–	–	DDB5	DDB4	DDB3	DDB2	DDB1	DDB0	DDRB
Read/Write	R	R	R/W	R/W	R/W	R/W	R/W	R/W	
Initial Value	0	0	0	0	0	0	0	0	

10.4.4 PINB – Port B Input Pins Address

Bit	7	6	5	4	3	2	1	0	
0x16	–	–	PINB5	PINB4	PINB3	PINB2	PINB1	PINB0	PINB
Read/Write	R	R	R/W	R/W	R/W	R/W	R/W	R/W	
Initial Value	0	0	N/A	N/A	N/A	N/A	N/A	N/A	

11. 8-bit Timer/Counter0 with PWM

11.1 Features

- **Two Independent Output Compare Units**
- **Double Buffered Output Compare Registers**
- **Clear Timer on Compare Match (Auto Reload)**
- **Glitch Free, Phase Correct Pulse Width Modulator (PWM)**
- **Variable PWM Period**
- **Frequency Generator**
- **Three Independent Interrupt Sources (TOV0, OCF0A, and OCF0B)**

11.2 Overview

Timer/Counter0 is a general purpose 8-bit Timer/Counter module, with two independent Output Compare Units, and with PWM support. It allows accurate program execution timing (event management) and wave generation.

A simplified block diagram of the 8-bit Timer/Counter is shown in Figure 11-1 on page 59. For the actual placement of I/O pins, refer to “Pinout of ATtiny13A” on page 2. CPU accessible I/O Registers, including I/O bits and I/O pins, are shown in bold. The device-specific I/O Register and bit locations are listed in the “Register Description” on page 70.

Figure 11-1. 8-bit Timer/Counter Block Diagram

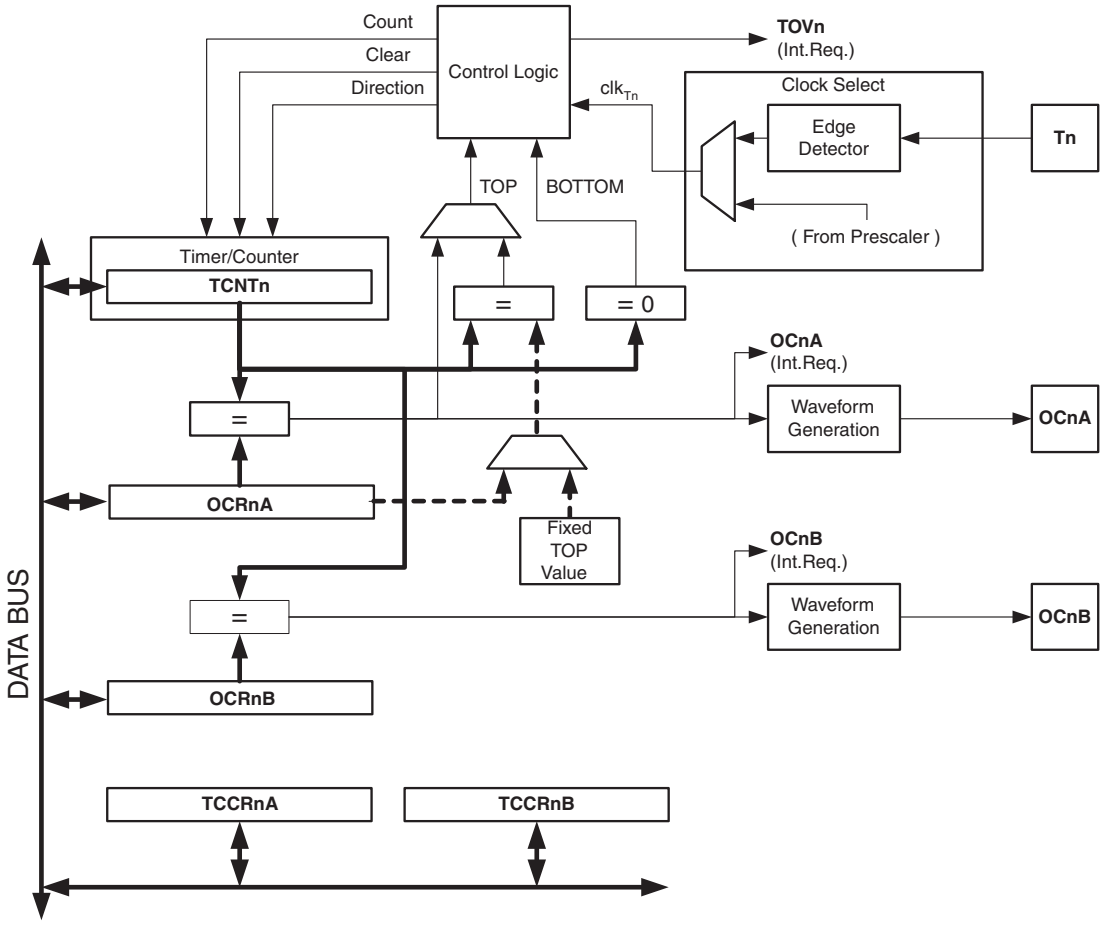

11.2.1 Registers

The Timer/Counter (TCNT0) and Output Compare Registers (OCR0A and OCR0B) are 8-bit registers. Interrupt request (abbreviated to Int.Req. in the figure) signals are all visible in the Timer Interrupt Flag Register (TIFR0). All interrupts are individually masked with the Timer Interrupt Mask Register (TIMSK0). TIFR0 and TIMSK0 are not shown in the figure.

The Timer/Counter can be clocked internally, via the prescaler, or by an external clock source on the T0 pin. The Clock Select logic block controls which clock source and edge the Timer/Counter uses to increment (or decrement) its value. The Timer/Counter is inactive when no clock source is selected. The output from the Clock Select logic is referred to as the timer clock (clk_{T0}).

The double buffered Output Compare Registers (OCR0A and OCR0B) is compared with the Timer/Counter value at all times. The result of the compare can be used by the Waveform Generator to generate a PWM or variable frequency output on the Output Compare pins (OC0A and OC0B). See “Output Compare Unit” on page 61. for details. The Compare Match event will also set the Compare Flag (OCF0A or OCF0B) which can be used to generate an Output Compare interrupt request.

11.2.2 Definitions

Many register and bit references in this section are written in general form. A lower case “n” replaces the Timer/Counter number, in this case 0. A lower case “x” replaces the Output Compare Unit, in this case Compare Unit A or Compare Unit B. However, when using the register or bit defines in a program, the precise form must be used, i.e., TCNT0 for accessing Timer/Counter0 counter value and so on.

The definitions in Table 11-1 on page 60 are also used extensively throughout the document.

Table 11-1. Definitions

BOTTOM	The counter reaches the BOTTOM when it becomes 0x00.
MAX	The counter reaches its MAXimum when it becomes 0xFF (decimal 255).
TOP	The counter reaches the TOP when it becomes equal to the highest value in the count sequence. The TOP value can be assigned to be the fixed value 0xFF (MAX) or the value stored in the OCR0A Register. The assignment is dependent on the mode of operation.

11.3 Timer/Counter Clock Sources

The Timer/Counter can be clocked by an internal or an external clock source. The clock source is selected by the Clock Select logic which is controlled by the Clock Select (CS0[2:0]) bits located in the Timer/Counter Control Register (TCCR0B). For details on clock sources and prescaler, see “Timer/Counter Prescaler” on page 77.

11.4 Counter Unit

The main part of the 8-bit Timer/Counter is the programmable bi-directional counter unit. Figure 11-2 shows a block diagram of the counter and its surroundings.

Figure 11-2. Counter Unit Block Diagram

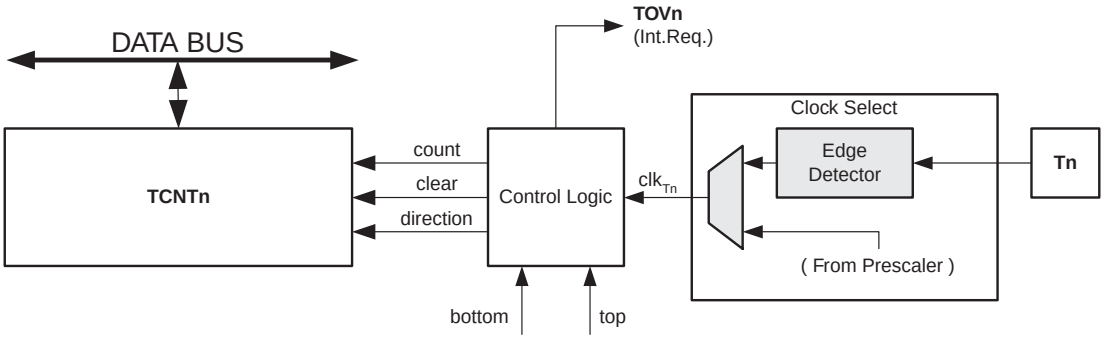

Signal description (internal signals):

count	Increment or decrement TCNT0 by 1.
direction	Select between increment and decrement.
clear	Clear TCNT0 (set all bits to zero).
clk_{Tn}	Timer/Counter clock, referred to as clk_{T0} in the following.
top	Signalize that TCNT0 has reached maximum value.
bottom	Signalize that TCNT0 has reached minimum value (zero).

Depending of the mode of operation used, the counter is cleared, incremented, or decremented at each timer clock (clk_{T0}). clk_{T0} can be generated from an external or internal clock source, selected by the Clock Select bits (CS0[2:0]). When no clock source is selected (CS0[2:0] = 0) the timer is stopped. However, the TCNT0 value can be accessed by the CPU, regardless of whether clk_{T0} is present or not. A CPU write overrides (has priority over) all counter clear or count operations.

The counting sequence is determined by the setting of the WGM01 and WGM00 bits located in the Timer/Counter Control Register (TCCR0A) and the WGM02 bit located in the Timer/Counter Control Register B (TCCR0B). There are close connections between how the counter behaves (counts) and how waveforms are generated on the Output Compare output OC0A. For more details about advanced counting sequences and waveform generation, see "Modes of Operation" on page 64.

The Timer/Counter Overflow Flag (TOV0) is set according to the mode of operation selected by the WGM0[1:0] bits. TOV0 can be used for generating a CPU interrupt.

11.5 Output Compare Unit

The 8-bit comparator continuously compares TCNT0 with the Output Compare Registers (OCR0A and OCR0B). Whenever TCNT0 equals OCR0A or OCR0B, the comparator signals a match. A match will set the Output Compare Flag (OCF0A or OCF0B) at the next timer clock cycle. If the corresponding interrupt is enabled, the Output Compare Flag generates an Output Compare interrupt. The Output Compare Flag is automatically cleared when the interrupt is executed. Alternatively, the flag can be cleared by software by writing a logical one to its I/O bit location. The Waveform Generator uses the match signal to generate an output according to operating mode set by the WGM0[2:0] bits and Compare Output mode (COM0x[1:0]) bits. The max and bottom signals are used by the Waveform Generator for handling the special cases of the extreme values in some modes of operation (See "Modes of Operation" on page 64.).

Figure 11-3 on page 62 shows a block diagram of the Output Compare unit.

Figure 11-3. Output Compare Unit, Block Diagram

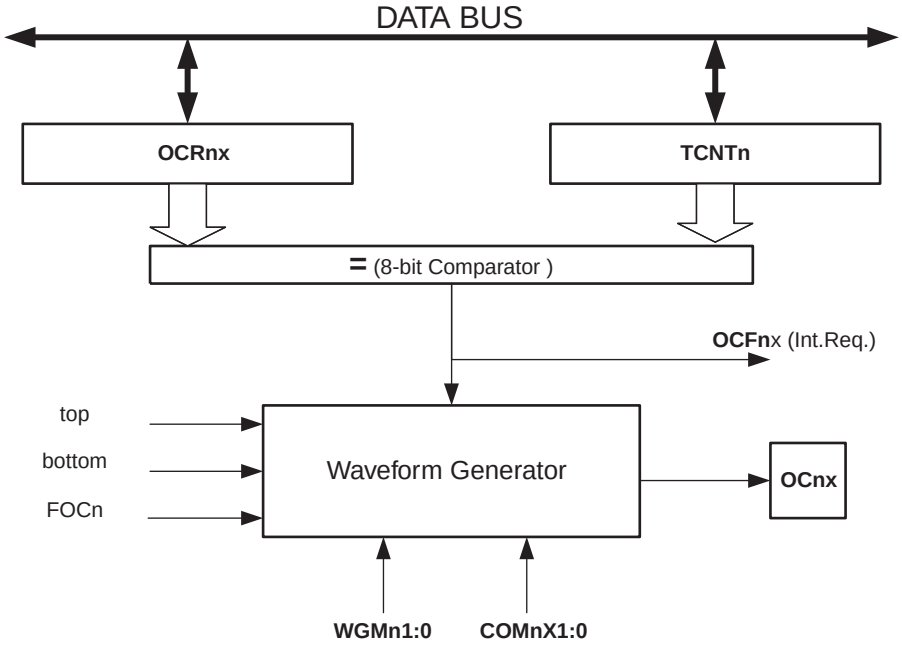

The OCR0x Registers are double buffered when using any of the Pulse Width Modulation (PWM) modes. For the normal and Clear Timer on Compare (CTC) modes of operation, the double buffering is disabled. The double buffering synchronizes the update of the OCR0x Compare Registers to either top or bottom of the counting sequence. The synchronization prevents the occurrence of odd-length, non-symmetrical PWM pulses, thereby making the output glitch-free.

The OCR0x Register access may seem complex, but this is not case. When the double buffering is enabled, the CPU has access to the OCR0x Buffer Register, and if double buffering is disabled the CPU will access the OCR0x directly.

11.5.1 Force Output Compare

In non-PWM waveform generation modes, the match output of the comparator can be forced by writing a one to the Force Output Compare (FOC0x) bit. Forcing Compare Match will not set the OCF0x Flag or reload/clear the timer, but the OC0x pin will be updated as if a real Compare Match had occurred (the COM0x[1:0] bits settings define whether the OC0x pin is set, cleared or toggled).

11.5.2 Compare Match Blocking by TCNT0 Write

All CPU write operations to the TCNT0 Register will block any Compare Match that occur in the next timer clock cycle, even when the timer is stopped. This feature allows OCR0x to be initialized to the same value as TCNT0 without triggering an interrupt when the Timer/Counter clock is enabled.

11.5.3 Using the Output Compare Unit

Since writing TCNT0 in any mode of operation will block all Compare Matches for one timer clock cycle, there are risks involved when changing TCNT0 when using the Output Compare Unit, independently of whether the Timer/Counter is running or not. If the value written to TCNT0 equals the OCR0x value, the Compare Match will be missed, resulting in incorrect waveform

generation. Similarly, do not write the TCNT0 value equal to BOTTOM when the counter is down-counting.

The setup of the OC0x should be performed before setting the Data Direction Register for the port pin to output. The easiest way of setting the OC0x value is to use the Force Output Compare (FOC0x) strobe bits in Normal mode. The OC0x Registers keep their values even when changing between Waveform Generation modes.

Be aware that the COM0x[1:0] bits are not double buffered together with the compare value. Changing the COM0x[1:0] bits will take effect immediately.

11.6 Compare Match Output Unit

The Compare Output mode (COM0x[1:0]) bits have two functions. The Waveform Generator uses the COM0x[1:0] bits for defining the Output Compare (OC0x) state at the next Compare Match. Also, the COM0x[1:0] bits control the OC0x pin output source. Figure 11-4 on page 63 shows a simplified schematic of the logic affected by the COM0x[1:0] bit setting. The I/O Registers, I/O bits, and I/O pins in the figure are shown in bold. Only the parts of the general I/O Port Control Registers (DDR and PORT) that are affected by the COM0x[1:0] bits are shown. When referring to the OC0x state, the reference is for the internal OC0x Register, not the OC0x pin. If a system reset occur, the OC0x Register is reset to “0”.

Figure 11-4. Compare Match Output Unit, Schematic

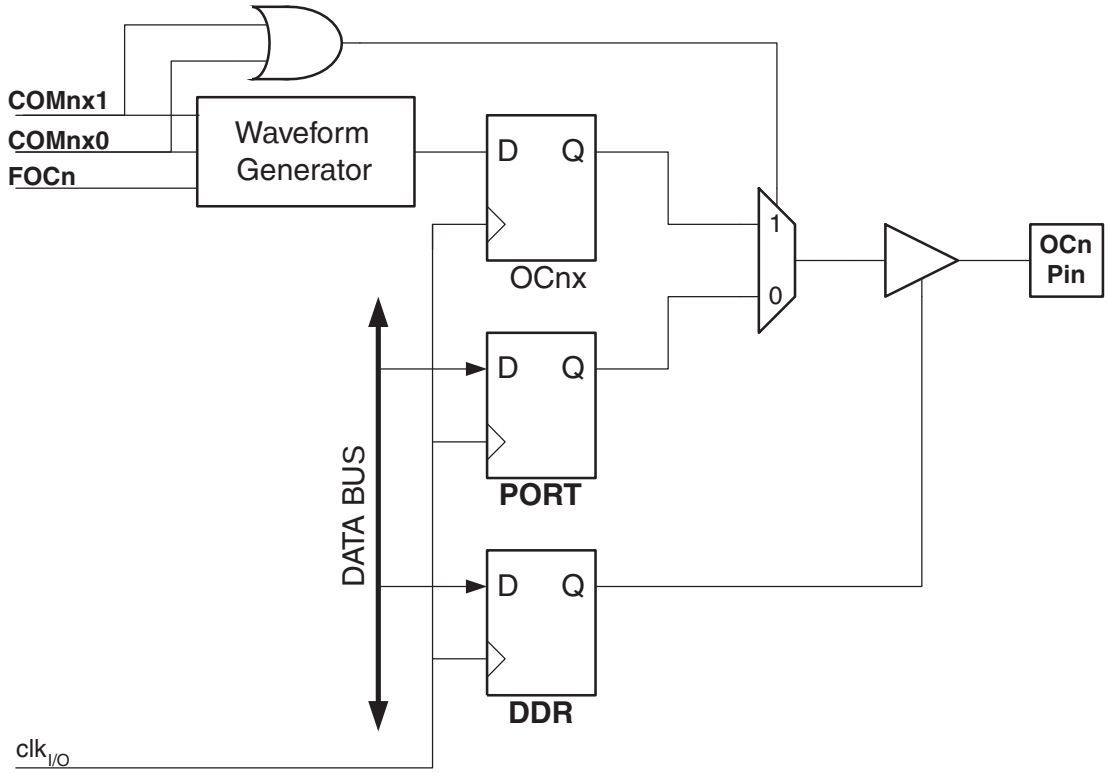

The general I/O port function is overridden by the Output Compare (OC0x) from the Waveform Generator if either of the COM0x[1:0] bits are set. However, the OC0x pin direction (input or output) is still controlled by the Data Direction Register (DDR) for the port pin. The Data Direction Register bit for the OC0x pin (DDR_OC0x) must be set as output before the OC0x value is visible on the pin. The port override function is independent of the Waveform Generation mode.

The design of the Output Compare pin logic allows initialization of the OC0x state before the output is enabled. Note that some COM0x[1:0] bit settings are reserved for certain modes of operation. See “Register Description” on page 70.

11.6.1 Compare Output Mode and Waveform Generation

The Waveform Generator uses the COM0x[1:0] bits differently in Normal, CTC, and PWM modes. For all modes, setting the COM0x[1:0] = 0 tells the Waveform Generator that no action on the OC0x Register is to be performed on the next Compare Match. For compare output actions in the non-PWM modes refer to Table 11-2 on page 70. For fast PWM mode, refer to Table 11-3 on page 71, and for phase correct PWM refer to Table 11-4 on page 71.

A change of the COM0x[1:0] bits state will have effect at the first Compare Match after the bits are written. For non-PWM modes, the action can be forced to have immediate effect by using the FOC0x strobe bits.

11.7 Modes of Operation

The mode of operation, i.e., the behavior of the Timer/Counter and the Output Compare pins, is defined by the combination of the Waveform Generation mode (WGM0[2:0]) and Compare Output mode (COM0x[1:0]) bits. The Compare Output mode bits do not affect the counting sequence, while the Waveform Generation mode bits do. The COM0x[1:0] bits control whether the PWM output generated should be inverted or not (inverted or non-inverted PWM). For non-PWM modes the COM0x[1:0] bits control whether the output should be set, cleared, or toggled at a Compare Match (See “Compare Match Output Unit” on page 63.).

For detailed timing information refer to Figure 11-8 on page 69, Figure 11-9 on page 69, Figure 11-10 on page 69 and Figure 11-11 on page 70 in “Timer/Counter Timing Diagrams” on page 68.

11.7.1 Normal Mode

The simplest mode of operation is the Normal mode (WGM0[2:0] = 0). In this mode the counting direction is always up (incrementing), and no counter clear is performed. The counter simply overruns when it passes its maximum 8-bit value (TOP = 0xFF) and then restarts from the bottom (0x00). In normal operation the Timer/Counter Overflow Flag (TOV0) will be set in the same timer clock cycle as the TCNT0 becomes zero. The TOV0 Flag in this case behaves like a ninth bit, except that it is only set, not cleared. However, combined with the timer overflow interrupt that automatically clears the TOV0 Flag, the timer resolution can be increased by software. There are no special cases to consider in the Normal mode, a new counter value can be written anytime.

The Output Compare Unit can be used to generate interrupts at some given time. Using the Output Compare to generate waveforms in Normal mode is not recommended, since this will occupy too much of the CPU time.

11.7.2 Clear Timer on Compare Match (CTC) Mode

In Clear Timer on Compare or CTC mode (WGM0[2:0] = 2), the OCR0A Register is used to manipulate the counter resolution. In CTC mode the counter is cleared to zero when the counter value (TCNT0) matches the OCR0A. The OCR0A defines the top value for the counter, hence also its resolution. This mode allows greater control of the Compare Match output frequency. It also simplifies the operation of counting external events.

The timing diagram for the CTC mode is shown in Figure 11-5 on page 65. The counter value (TCNT0) increases until a Compare Match occurs between TCNT0 and OCR0A, and then counter (TCNT0) is cleared.

Figure 11-5. CTC Mode, Timing Diagram

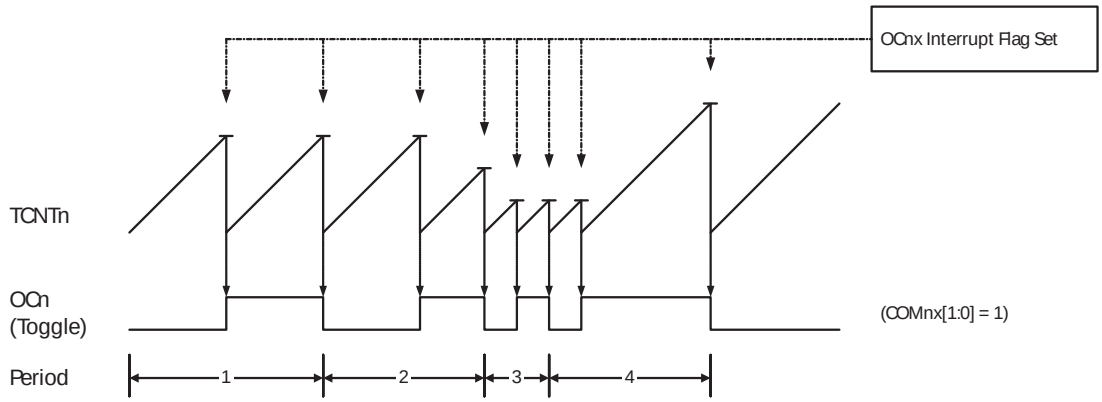

An interrupt can be generated each time the counter value reaches the TOP value by using the OCF0A Flag. If the interrupt is enabled, the interrupt handler routine can be used for updating the TOP value. However, changing TOP to a value close to BOTTOM when the counter is running with none or a low prescaler value must be done with care since the CTC mode does not have the double buffering feature. If the new value written to OCR0A is lower than the current value of TCNT0, the counter will miss the Compare Match. The counter will then have to count to its maximum value (0xFF) and wrap around starting at 0x00 before the Compare Match can occur.

For generating a waveform output in CTC mode, the OC0A output can be set to toggle its logical level on each Compare Match by setting the Compare Output mode bits to toggle mode (COM0A[1:0] = 1). The OC0A value will not be visible on the port pin unless the data direction for the pin is set to output. The waveform generated will have a maximum frequency of $f_{OC0} = f_{clk_I/O}/2$ when OCR0A is set to zero (0x00). The waveform frequency is defined by the following equation:

$$f_{OCnx} = \frac{f_{clk_I/O}}{2 \cdot N \cdot (1 + OCRnx)}$$

The *N* variable represents the prescale factor (1, 8, 64, 256, or 1024).

As for the Normal mode of operation, the TOV0 Flag is set in the same timer clock cycle that the counter counts from MAX to 0x00.

11.7.3 Fast PWM Mode

The fast Pulse Width Modulation or fast PWM mode (WGM0[2:0] = 3 or 7) provides a high frequency PWM waveform generation option. The fast PWM differs from the other PWM option by its single-slope operation. The counter counts from BOTTOM to TOP then restarts from BOTTOM. TOP is defined as 0xFF when WGM0[2:0] = 3, and OCR0A when WGM0[2:0] = 7. In non-inverting Compare Output mode, the Output Compare (OC0x) is cleared on the Compare Match between TCNT0 and OCR0x, and set at BOTTOM. In inverting Compare Output mode, the output is set on Compare Match and cleared at BOTTOM. Due to the single-slope operation, the operating frequency of the fast PWM mode can be twice as high as the phase correct PWM mode that use dual-slope operation. This high frequency makes the fast PWM mode well suited

for power regulation, rectification, and DAC applications. High frequency allows physically small sized external components (coils, capacitors), and therefore reduces total system cost.

In fast PWM mode, the counter is incremented until the counter value matches the TOP value. The counter is then cleared at the following timer clock cycle. The timing diagram for the fast PWM mode is shown in Figure 11-6 on page 66. The TCNT0 value is in the timing diagram shown as a histogram for illustrating the single-slope operation. The diagram includes non-inverted and inverted PWM outputs. The small horizontal line marks on the TCNT0 slopes represent Compare Matches between OCR0x and TCNT0.

Figure 11-6. Fast PWM Mode, Timing Diagram

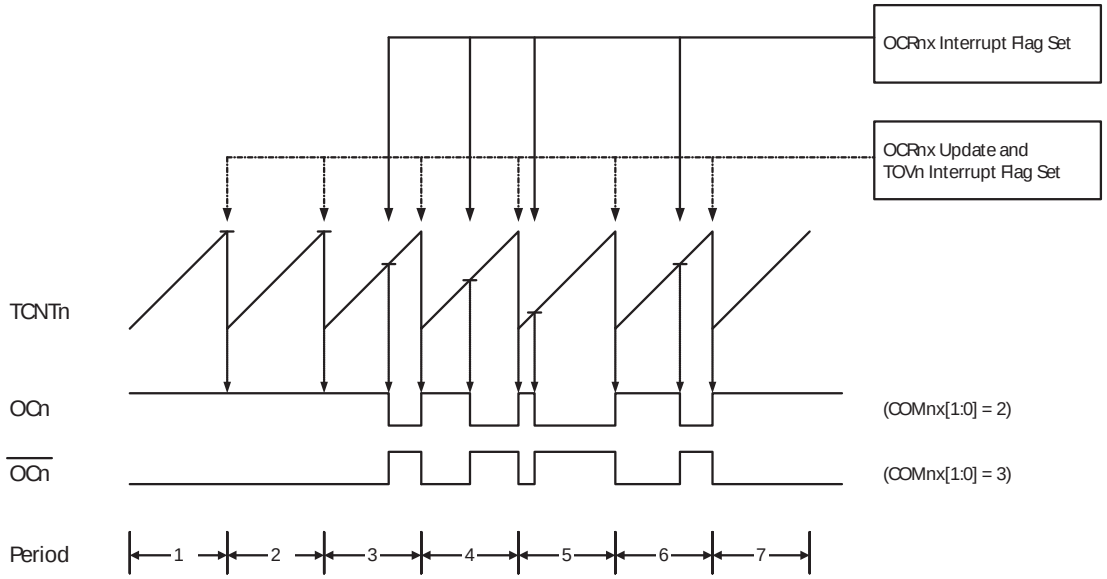

The Timer/Counter Overflow Flag (TOV0) is set each time the counter reaches TOP. If the interrupt is enabled, the interrupt handler routine can be used for updating the compare value.

In fast PWM mode, the compare unit allows generation of PWM waveforms on the OC0x pins. Setting the COM0x[1:0] bits to two will produce a non-inverted PWM and an inverted PWM output can be generated by setting the COM0x[1:0] to three: Setting the COM0A[1:0] bits to one allows the AC0A pin to toggle on Compare Matches if the WGM02 bit is set. This option is not available for the OC0B pin (See Table 11-3 on page 71). The actual OC0x value will only be visible on the port pin if the data direction for the port pin is set as output. The PWM waveform is generated by setting (or clearing) the OC0x Register at the Compare Match between OCR0x and TCNT0, and clearing (or setting) the OC0x Register at the timer clock cycle the counter is cleared (changes from TOP to BOTTOM).

The PWM frequency for the output can be calculated by the following equation:

$$f_{OCnxPWM} = \frac{f_{clk_I/O}}{N \cdot 256}$$

The *N* variable represents the prescale factor (1, 8, 64, 256, or 1024).

The extreme values for the OCR0A Register represents special cases when generating a PWM waveform output in the fast PWM mode. If the OCR0A is set equal to BOTTOM, the output will be a narrow spike for each MAX+1 timer clock cycle. Setting the OCR0A equal to MAX will result

in a constantly high or low output (depending on the polarity of the output set by the COM0A[1:0] bits.)

A frequency (with 50% duty cycle) waveform output in fast PWM mode can be achieved by setting OC0x to toggle its logical level on each Compare Match (COM0x[1:0] = 1). The waveform generated will have a maximum frequency of $f_{OC0} = f_{clk_I/O}/2$ when OCR0A is set to zero. This feature is similar to the OC0A toggle in CTC mode, except the double buffer feature of the Output Compare unit is enabled in the fast PWM mode.

11.7.4 Phase Correct PWM Mode

The phase correct PWM mode (WGM0[2:0] = 1 or 5) provides a high resolution phase correct PWM waveform generation option. The phase correct PWM mode is based on a dual-slope operation. The counter counts repeatedly from BOTTOM to TOP and then from TOP to BOTTOM. TOP is defined as 0xFF when WGM0[2:0] = 1, and OCR0A when WGM0[2:0] = 5. In non-inverting Compare Output mode, the Output Compare (OC0x) is cleared on the Compare Match between TCNT0 and OCR0x while upcounting, and set on the Compare Match while downcounting. In inverting Output Compare mode, the operation is inverted. The dual-slope operation has lower maximum operation frequency than single slope operation. However, due to the symmetric feature of the dual-slope PWM modes, these modes are preferred for motor control applications.

In phase correct PWM mode the counter is incremented until the counter value matches TOP. When the counter reaches TOP, it changes the count direction. The TCNT0 value will be equal to TOP for one timer clock cycle. The timing diagram for the phase correct PWM mode is shown on Figure 11-7 on page 67. The TCNT0 value is in the timing diagram shown as a histogram for illustrating the dual-slope operation. The diagram includes non-inverted and inverted PWM outputs. The small horizontal line marks on the TCNT0 slopes represent Compare Matches between OCR0x and TCNT0.

Figure 11-7. Phase Correct PWM Mode, Timing Diagram

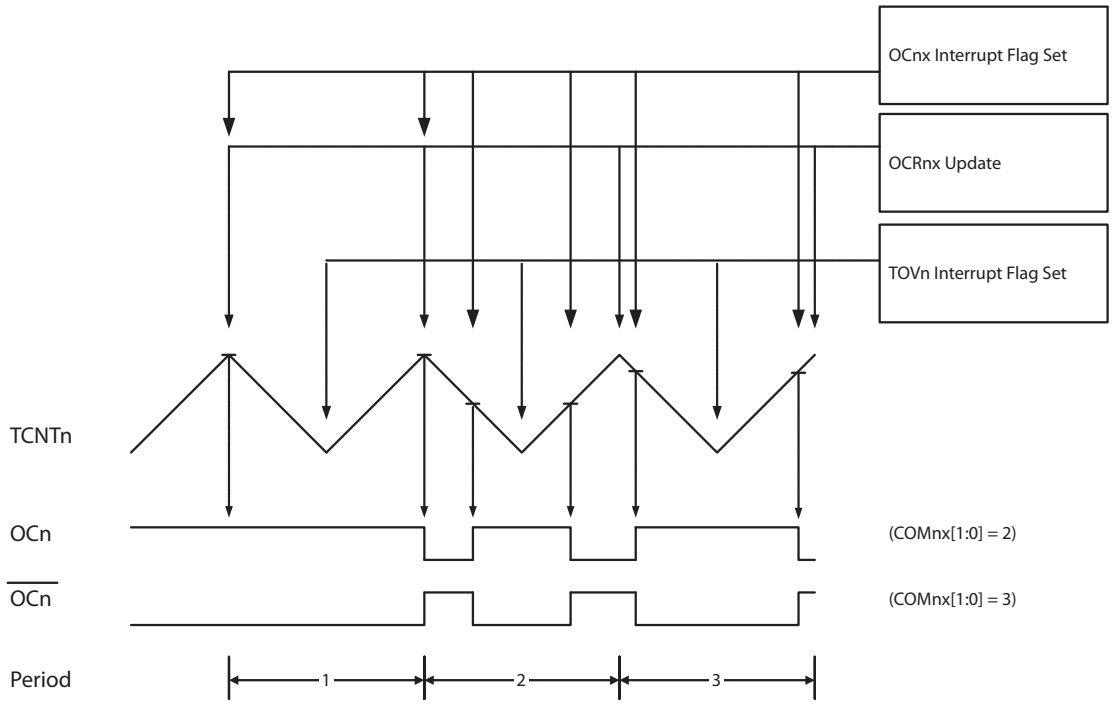

The Timer/Counter Overflow Flag (TOV0) is set each time the counter reaches BOTTOM. The Interrupt Flag can be used to generate an interrupt each time the counter reaches the BOTTOM value.

In phase correct PWM mode, the compare unit allows generation of PWM waveforms on the OC0x pins. Setting the COM0x[1:0] bits to two will produce a non-inverted PWM. An inverted PWM output can be generated by setting the COM0x[1:0] to three: Setting the COM0A0 bits to one allows the OC0A pin to toggle on Compare Matches if the WGM02 bit is set. This option is not available for the OC0B pin (See Table 11-4 on page 71). The actual OC0x value will only be visible on the port pin if the data direction for the port pin is set as output. The PWM waveform is generated by clearing (or setting) the OC0x Register at the Compare Match between OCR0x and TCNT0 when the counter increments, and setting (or clearing) the OC0x Register at Compare Match between OCR0x and TCNT0 when the counter decrements. The PWM frequency for the output when using phase correct PWM can be calculated by the following equation:

$$f_{OCnxPCPWM} = \frac{f_{clk_I/O}}{N \cdot 510}$$

The N variable represents the prescale factor (1, 8, 64, 256, or 1024).

The extreme values for the OCR0A Register represent special cases when generating a PWM waveform output in the phase correct PWM mode. If the OCR0A is set equal to BOTTOM, the output will be continuously low and if set equal to MAX the output will be continuously high for non-inverted PWM mode. For inverted PWM the output will have the opposite logic values.

At the very start of period 2 in Figure 11-7 on page 67 OCn has a transition from high to low even though there is no Compare Match. The point of this transition is to guarantee symmetry around BOTTOM. There are two cases that give a transition without Compare Match.

- OCR0A changes its value from MAX, like in Figure 11-7 on page 67. When the OCR0A value is MAX the OCn pin value is the same as the result of a down-counting Compare Match. To ensure symmetry around BOTTOM the OCn value at MAX must correspond to the result of an up-counting Compare Match.
- The timer starts counting from a value higher than the one in OCR0A, and for that reason misses the Compare Match and hence the OCn change that would have happened on the way up.

11.8 Timer/Counter Timing Diagrams

The Timer/Counter is a synchronous design and the timer clock (clk_{T0}) is therefore shown as a clock enable signal in the following figures. The figures include information on when Interrupt Flags are set. Figure 11-8 on page 69 contains timing data for basic Timer/Counter operation. The figure shows the count sequence close to the MAX value in all modes other than phase correct PWM mode.

Figure 11-8. Timer/Counter Timing Diagram, no Prescaling

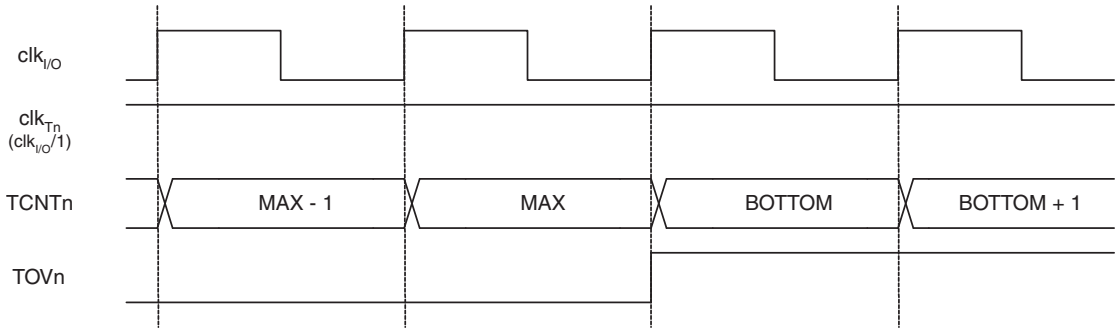

Figure 11-9 shows the same timing data, but with the prescaler enabled.

Figure 11-9. Timer/Counter Timing Diagram, with Prescaler ($f_{clk_I/O}$/8)

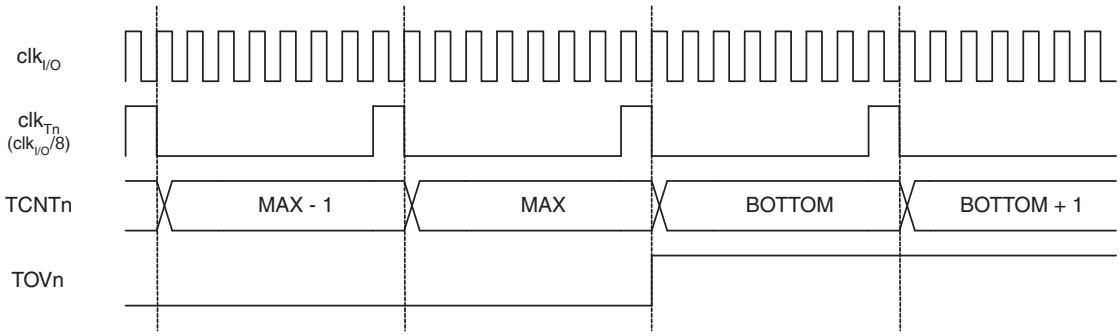

Figure 11-10 shows the setting of OCF0B in all modes and OCF0A in all modes except CTC mode and PWM mode, where OCR0A is TOP.

Figure 11-10. Timer/Counter Timing Diagram, Setting of OCF0x, with Prescaler ($f_{clk_I/O}$/8)

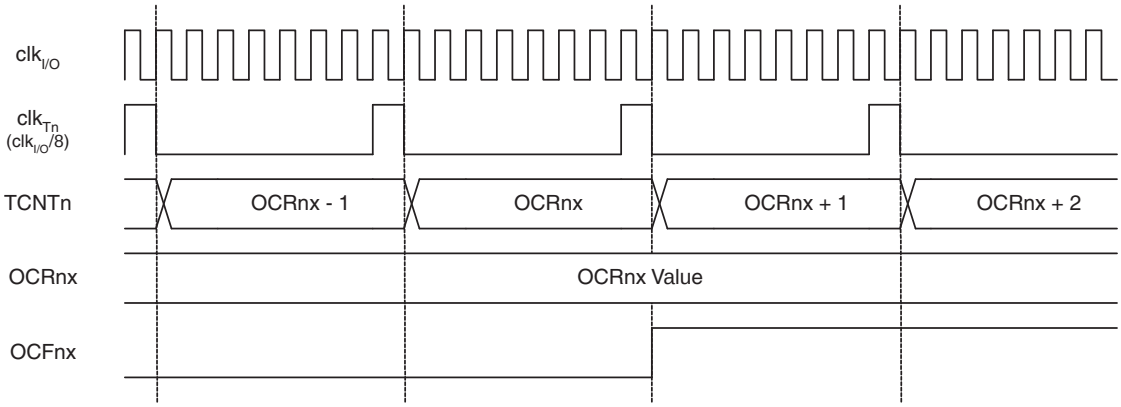

Figure 11-11 shows the setting of OCF0A and the clearing of TCNT0 in CTC mode and fast PWM mode where OCR0A is TOP.

Figure 11-11. Timer/Counter Timing Diagram, Clear Timer on Compare Match mode, with Prescaler ($f_{clk_I/O}/8$)

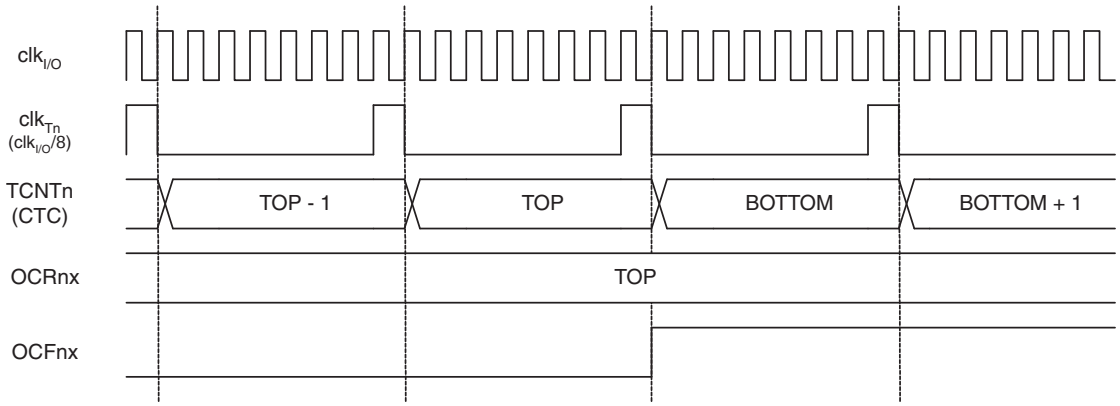

11.9 Register Description

11.9.1 TCCR0A – Timer/Counter Control Register A

Bit	7	6	5	4	3	2	1	0	
0x2F	COM0A1	COM0A0	COM0B1	COM0B0	–	–	WGM01	WGM00	TCCR0A
Read/Write	R/W	R/W	R/W	R/W	R	R	R/W	R/W	
Initial Value	0	0	0	0	0	0	0	0	

- **Bits 7:6 – COM0A[1:0]: Compare Match Output A Mode**

These bits control the Output Compare pin (OC0A) behavior. If one or both of the COM0A[1:0] bits are set, the OC0A output overrides the normal port functionality of the I/O pin it is connected to. However, note that the Data Direction Register (DDR) bit corresponding to the OC0A pin must be set in order to enable the output driver.

When OC0A is connected to the pin, the function of the COM0A[1:0] bits depends on the WGM0[2:0] bit setting.

Table 11-2 shows the COM0A[1:0] bit functionality when the WGM0[2:0] bits are set to a normal or CTC mode (non-PWM).

Table 11-2. Compare Output Mode, non-PWM Mode

COM0A1	COM0A0	Description
0	0	Normal port operation, OC0A disconnected.
0	1	Toggle OC0A on Compare Match
1	0	Clear OC0A on Compare Match
1	1	Set OC0A on Compare Match

Table 11-3 shows the COM0A[1:0] bit functionality when the WGM0[1:0] bits are set to fast PWM mode.

Table 11-3. Compare Output Mode, Fast PWM Mode[1]

COM0A1	COM0A0	Description
0	0	Normal port operation, OC0A disconnected.
0	1	WGM02 = 0: Normal Port Operation, OC0A Disconnected. WGM02 = 1: Toggle OC0A on Compare Match.
1	0	Clear OC0A on Compare Match, set OC0A at TOP
1	1	Set OC0A on Compare Match, clear OC0A at TOP

Note: 1. A special case occurs when OCR0A equals TOP and COM0A1 is set. In this case, the Compare Match is ignored, but the set or clear is done at TOP. See "Fast PWM Mode" on page 65 for more details.

Table 11-4 shows the COM0A[1:0] bit functionality when the WGM0[2:0] bits are set to phase correct PWM mode.

Table 11-4. Compare Output Mode, Phase Correct PWM Mode[1]

COM0A1	COM0A0	Description
0	0	Normal port operation, OC0A disconnected.
0	1	WGM02 = 0: Normal Port Operation, OC0A Disconnected. WGM02 = 1: Toggle OC0A on Compare Match.
1	0	Clear OC0A on Compare Match when up-counting. Set OC0A on Compare Match when down-counting.
1	1	Set OC0A on Compare Match when up-counting. Clear OC0A on Compare Match when down-counting.

Note: 1. A special case occurs when OCR0A equals TOP and COM0A1 is set. In this case, the Compare Match is ignored, but the set or clear is done at TOP. See "Phase Correct PWM Mode" on page 67 for more details.

- **Bits 5:4 – COM0B[1:0]: Compare Match Output B Mode**

These bits control the Output Compare pin (OC0B) behavior. If one or both of the COM0B[1:0] bits are set, the OC0B output overrides the normal port functionality of the I/O pin it is connected to. However, note that the Data Direction Register (DDR) bit corresponding to the OC0B pin must be set in order to enable the output driver.

When OC0B is connected to the pin, the function of the COM0B[1:0] bits depends on the WGM0[2:0] bit setting.

Table 11-5 on page 72 shows the COM0B[1:0] bit functionality when the WGM0[2:0] bits are set to a normal or CTC mode (non-PWM).

Table 11-5. Compare Output Mode, non-PWM Mode

COM0B1	COM0B0	Description
0	0	Normal port operation, OC0B disconnected.
0	1	Toggle OC0B on Compare Match
1	0	Clear OC0B on Compare Match
1	1	Set OC0B on Compare Match

Table 11-6 shows the COM0B[1:0] bit functionality when the WGM0[2:0] bits are set to fast PWM mode.

Table 11-6. Compare Output Mode, Fast PWM Mode(1)

COM0B1	COM0B0	Description
0	0	Normal port operation, OC0B disconnected.
0	1	Reserved
1	0	Clear OC0B on Compare Match, set OC0B at TOP
1	1	Set OC0B on Compare Match, clear OC0B at TOP

Note: 1. A special case occurs when OCR0B equals TOP and COM0B1 is set. In this case, the Compare Match is ignored, but the set or clear is done at TOP. See "Fast PWM Mode" on page 65 for more details.

Table 11-7 shows the COM0B[1:0] bit functionality when the WGM0[2:0] bits are set to phase correct PWM mode.

Table 11-7. Compare Output Mode, Phase Correct PWM Mode(1)

COM0B1	COM0B0	Description
0	0	Normal port operation, OC0B disconnected.
0	1	Reserved
1	0	Clear OC0B on Compare Match when up-counting. Set OC0B on Compare Match when down-counting.
1	1	Set OC0B on Compare Match when up-counting. Clear OC0B on Compare Match when down-counting.

Note: 1. A special case occurs when OCR0B equals TOP and COM0B1 is set. In this case, the Compare Match is ignored, but the set or clear is done at TOP. See "Phase Correct PWM Mode" on page 67 for more details.

- **Bits 3:2 – Res: Reserved Bits**

These bits are reserved bits in the ATtiny13A and will always read as zero.

- **Bits 1:0 – WGM0[1:0]: Waveform Generation Mode**

Combined with the WGM02 bit found in the TCCR0B Register, these bits control the counting sequence of the counter, the source for maximum (TOP) counter value, and what type of waveform generation to be used, see Table 11-8 on page 73. Modes of operation supported by the Timer/Counter unit are: Normal mode (counter), Clear Timer on Compare Match (CTC) mode, and two types of Pulse Width Modulation (PWM) modes (see "Modes of Operation" on page 64).

Table 11-8. Waveform Generation Mode Bit Description

Mode	WGM02	WGM01	WGM00	Timer/Counter Mode of Operation	TOP	Update of OCRx at	TOV Flag Set on(1)(2)
0	0	0	0	Normal	0xFF	Immediate	MAX
1	0	0	1	PWM (Phase Correct)	0xFF	TOP	BOTTOM
2	0	1	0	CTC	OCRA	Immediate	MAX
3	0	1	1	Fast PWM	0xFF	TOP	MAX
4	1	0	0	Reserved	–	–	–
5	1	0	1	PWM (Phase Correct)	OCRA	TOP	BOTTOM
6	1	1	0	Reserved	–	–	–
7	1	1	1	Fast PWM	OCRA	TOP	TOP

Notes: 1. MAX = 0xFF
2. BOTTOM = 0x00

11.9.2 TCCR0B – Timer/Counter Control Register B

Bit	7	6	5	4	3	2	1	0	
0x33	FOC0A	FOC0B	–	–	WGM02	CS02	CS01	CS00	TCCR0B
Read/Write	W	W	R	R	R/W	R/W	R/W	R/W	
Initial Value	0	0	0	0	0	0	0	0	

- **Bit 7 – FOC0A: Force Output Compare A**

The FOC0A bit is only active when the WGM bits specify a non-PWM mode.

However, for ensuring compatibility with future devices, this bit must be set to zero when TCCR0B is written when operating in PWM mode. When writing a logical one to the FOC0A bit, an immediate Compare Match is forced on the Waveform Generation unit. The OC0A output is changed according to its COM0A[1:0] bits setting. Note that the FOC0A bit is implemented as a strobe. Therefore it is the value present in the COM0A[1:0] bits that determines the effect of the forced compare.

A FOC0A strobe will not generate any interrupt, nor will it clear the timer in CTC mode using OCR0A as TOP.

The FOC0A bit is always read as zero.

- **Bit 6 – FOC0B: Force Output Compare B**

The FOC0B bit is only active when the WGM bits specify a non-PWM mode.

However, for ensuring compatibility with future devices, this bit must be set to zero when TCCR0B is written when operating in PWM mode. When writing a logical one to the FOC0B bit, an immediate Compare Match is forced on the Waveform Generation unit. The OC0B output is changed according to its COM0B[1:0] bits setting. Note that the FOC0B bit is implemented as a strobe. Therefore it is the value present in the COM0B[1:0] bits that determines the effect of the forced compare.

A FOC0B strobe will not generate any interrupt, nor will it clear the timer in CTC mode using OCR0B as TOP.

The FOC0B bit is always read as zero.

- **Bits 5:4 – Res: Reserved Bits**

These bits are reserved bits in the ATtiny13A and will always read as zero.

- **Bit 3 – WGM02: Waveform Generation Mode**

See the description in the "TCCR0A – Timer/Counter Control Register A" on page 70.

- **Bits 2:0 – CS0[2:0]: Clock Select**

The three Clock Select bits select the clock source to be used by the Timer/Counter.

Table 11-9. Clock Select Bit Description

CS02	CS01	CS00	Description
0	0	0	No clock source (Timer/Counter stopped)
0	0	1	$clk_{I/O}$/(No prescaling)
0	1	0	$clk_{I/O}$/8 (From prescaler)
0	1	1	$clk_{I/O}$/64 (From prescaler)
1	0	0	$clk_{I/O}$/256 (From prescaler)
1	0	1	$clk_{I/O}$/1024 (From prescaler)
1	1	0	External clock source on T0 pin. Clock on falling edge.
1	1	1	External clock source on T0 pin. Clock on rising edge.

If external pin modes are used for the Timer/Counter0, transitions on the T0 pin will clock the counter even if the pin is configured as an output. This feature allows software control of the counting.

11.9.3 TCNT0 – Timer/Counter Register

Bit	7	6	5	4	3	2	1	0	
0x32	TCNT0[7:0]								TCNT0
Read/Write	R/W	R/W	R/W	R/W	R/W	R/W	R/W	R/W	
Initial Value	0	0	0	0	0	0	0	0	

The Timer/Counter Register gives direct access, both for read and write operations, to the Timer/Counter unit 8-bit counter. Writing to the TCNT0 Register blocks (removes) the Compare Match on the following timer clock. Modifying the counter (TCNT0) while the counter is running, introduces a risk of missing a Compare Match between TCNT0 and the OCR0x Registers.

11.9.4 OCR0A – Output Compare Register A

Bit	7	6	5	4	3	2	1	0	
0x36	OCR0A[7:0]								OCR0A
Read/Write	R/W	R/W	R/W	R/W	R/W	R/W	R/W	R/W	
Initial Value	0	0	0	0	0	0	0	0	

The Output Compare Register A contains an 8-bit value that is continuously compared with the counter value (TCNT0). A match can be used to generate an Output Compare interrupt, or to generate a waveform output on the OC0A pin.

11.9.5 OCR0B – Output Compare Register B

Bit	7	6	5	4	3	2	1	0	
0x29	OCR0B[7:0]								OCR0B
Read/Write	R/W	R/W	R/W	R/W	R/W	R/W	R/W	R/W	
Initial Value	0	0	0	0	0	0	0	0	

The Output Compare Register B contains an 8-bit value that is continuously compared with the counter value (TCNT0). A match can be used to generate an Output Compare interrupt, or to generate a waveform output on the OC0B pin.

11.9.6 TIMSK0 – Timer/Counter Interrupt Mask Register

Bit	7	6	5	4	3	2	1	0	
0x39	–	–	–	–	OCIE0B	OCIE0A	TOIE0	–	TIMSK0
Read/Write	R	R	R	R	R/W	R/W	R/W	R	
Initial Value	0	0	0	0	0	0	0	0	

- **Bits 7:4, 0 – Res: Reserved Bits**

These bits are reserved bits in the ATtiny13A and will always read as zero.

- **Bit 3 – OCIE0B: Timer/Counter Output Compare Match B Interrupt Enable**

When the OCIE0B bit is written to one, and the I-bit in the Status Register is set, the Timer/Counter Compare Match B interrupt is enabled. The corresponding interrupt is executed if a Compare Match in Timer/Counter occurs, i.e., when the OCF0B bit is set in the Timer/Counter Interrupt Flag Register – TIFR0.

- **Bit 2 – OCIE0A: Timer/Counter0 Output Compare Match A Interrupt Enable**

When the OCIE0A bit is written to one, and the I-bit in the Status Register is set, the Timer/Counter0 Compare Match A interrupt is enabled. The corresponding interrupt is executed if a Compare Match in Timer/Counter0 occurs, i.e., when the OCF0A bit is set in the Timer/Counter 0 Interrupt Flag Register – TIFR0.

- **Bit 1 – TOIE0: Timer/Counter0 Overflow Interrupt Enable**

When the TOIE0 bit is written to one, and the I-bit in the Status Register is set, the Timer/Counter0 Overflow interrupt is enabled. The corresponding interrupt is executed if an overflow in Timer/Counter0 occurs, i.e., when the TOV0 bit is set in the Timer/Counter 0 Interrupt Flag Register – TIFR0.

11.9.7 TIFR0 – Timer/Counter 0 Interrupt Flag Register

Bit	7	6	5	4	3	2	1	0	
0x38	–	–	–	–	OCF0B	OCF0A	TOV0	–	TIFR0
Read/Write	R	R	R	R	R/W	R/W	R/W	R	
Initial Value	0	0	0	0	0	0	0	0	

- **Bits 7:4, 0 – Res: Reserved Bits**

These bits are reserved bits in the ATtiny13A and will always read as zero.

- **Bit 3 – OCF0B: Output Compare Flag 0 B**

The OCF0B bit is set when a Compare Match occurs between the Timer/Counter and the data in OCR0B – Output Compare Register0 B. OCF0B is cleared by hardware when executing the corresponding interrupt handling vector. Alternatively, OCF0B is cleared by writing a logic one to the flag. When the I-bit in SREG, OCIE0B (Timer/Counter Compare B Match Interrupt Enable), and OCF0B are set, the Timer/Counter Compare Match Interrupt is executed.

- **Bit 2 – OCF0A: Output Compare Flag 0 A**

The OCF0A bit is set when a Compare Match occurs between the Timer/Counter0 and the data in OCR0A – Output Compare Register0. OCF0A is cleared by hardware when executing the corresponding interrupt handling vector. Alternatively, OCF0A is cleared by writing a logic one to the flag. When the I-bit in SREG, OCIE0A (Timer/Counter0 Compare Match Interrupt Enable), and OCF0A are set, the Timer/Counter0 Compare Match Interrupt is executed.

- **Bit 1 – TOV0: Timer/Counter0 Overflow Flag**

The bit TOV0 is set when an overflow occurs in Timer/Counter0. TOV0 is cleared by hardware when executing the corresponding interrupt handling vector. Alternatively, TOV0 is cleared by writing a logic one to the flag. When the SREG I-bit, TOIE0 (Timer/Counter0 Overflow Interrupt Enable), and TOV0 are set, the Timer/Counter0 Overflow interrupt is executed.

The setting of this flag is dependent of the WGM0[2:0] bit setting. Refer to Table 11-8, “Waveform Generation Mode Bit Description” on page 73.

12. Timer/Counter Prescaler

12.1 Overview

The Timer/Counter can be clocked directly by the system clock (by setting the CSn[2:0] = 1). This provides the fastest operation, with a maximum Timer/Counter clock frequency equal to system clock frequency ($f_{CLK_I/O}$). Alternatively, one of four taps from the prescaler can be used as a clock source. The prescaled clock has a frequency of either $f_{CLK_I/O}/8$, $f_{CLK_I/O}/64$, $f_{CLK_I/O}/256$, or $f_{CLK_I/O}/1024$.

12.2 Prescaler Reset

The prescaler is free running, i.e., operates independently of the Clock Select logic of the Timer/Counter. Since the prescaler is not affected by the Timer/Counter's clock select, the state of the prescaler will have implications for situations where a prescaled clock is used. One example of prescaling artifacts occurs when the timer is enabled and clocked by the prescaler (6 > CSn[2:0] > 1). The number of system clock cycles from when the timer is enabled to the first count occurs can be from 1 to N+1 system clock cycles, where N equals the prescaler divisor (8, 64, 256, or 1024).

It is possible to use the Prescaler Reset for synchronizing the Timer/Counter to program execution.

12.3 External Clock Source

An external clock source applied to the T0 pin can be used as Timer/Counter clock (clk_{T0}). The T0 pin is sampled once every system clock cycle by the pin synchronization logic. The synchronized (sampled) signal is then passed through the edge detector. Figure 12-1 on page 77 shows a functional equivalent block diagram of the T0 synchronization and edge detector logic. The registers are clocked at the positive edge of the internal system clock ($clk_{I/O}$). The latch is transparent in the high period of the internal system clock.

The edge detector generates one clk_{T0} pulse for each positive (CSn[2:0] = 7) or negative (CSn[2:0] = 6) edge it detects.

Figure 12-1. T0 Pin Sampling

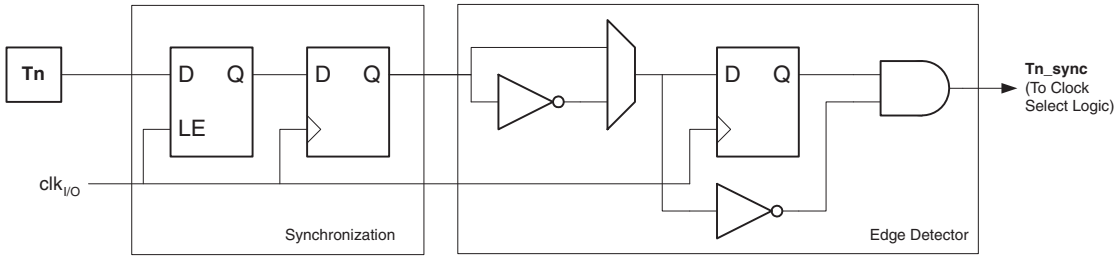

The synchronization and edge detector logic introduces a delay of 2.5 to 3.5 system clock cycles from an edge has been applied to the T0 pin to the counter is updated.

Enabling and disabling of the clock input must be done when T0 has been stable for at least one system clock cycle, otherwise it is a risk that a false Timer/Counter clock pulse is generated.

Each half period of the external clock applied must be longer than one system clock cycle to ensure correct sampling. The external clock must be guaranteed to have less than half the system clock frequency ($f_{ExtClk} < f_{clk_I/O}/2$) given a 50/50% duty cycle. Since the edge detector uses

sampling, the maximum frequency of an external clock it can detect is half the sampling frequency (Nyquist sampling theorem). However, due to variation of the system clock frequency and duty cycle caused by Oscillator source (crystal, resonator, and capacitors) tolerances, it is recommended that maximum frequency of an external clock source is less than $f_{clk_I/O}/2.5$.

An external clock source can not be prescaled.

Figure 12-2. Prescaler for Timer/Counter0

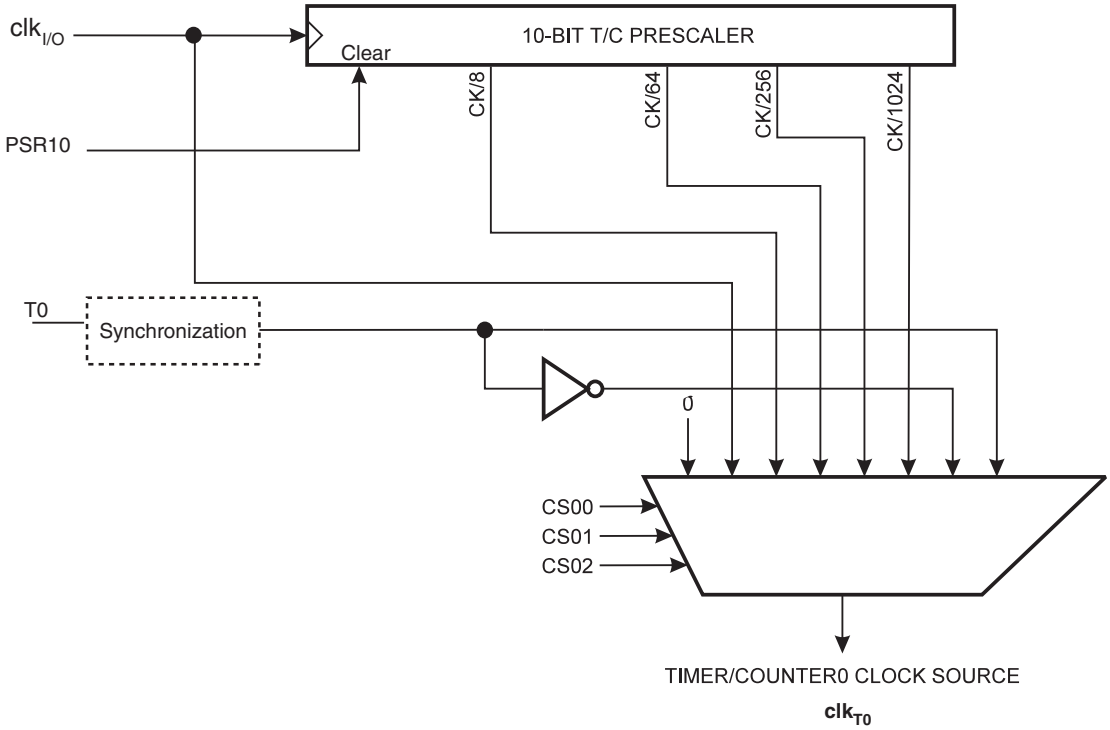

Note: 1. The synchronization logic on the input pins (T0) is shown in Figure 12-1 on page 77.

12.4 Register Description.

12.4.1 GTCCR – General Timer/Counter Control Register

Bit	7	6	5	4	3	2	1	0	
0x28	TSM	–	–	–	–	–	–	PSR10	GTCCR
Read/Write	R/W	R	R	R	R	R	R	R/W	
Initial Value	0	0	0	0	0	0	0	0	

- **Bit 7 – TSM: Timer/Counter Synchronization Mode**

Writing the TSM bit to one activates the Timer/Counter Synchronization mode. In this mode, the value that is written to the PSR10 bit is kept, hence keeping the Prescaler Reset signal asserted. This ensures that the Timer/Counter is halted and can be configured without the risk of advancing during configuration. When the TSM bit is written to zero, the PSR10 bit is cleared by hardware, and the Timer/Counter start counting.

- **Bit 0 – PSR10: Prescaler Reset Timer/Counter0**

When this bit is one, the Timer/Counter0 prescaler will be Reset. This bit is normally cleared immediately by hardware, except if the TSM bit is set.

13. Analog Comparator

The Analog Comparator compares the input values on the positive pin AIN0 and negative pin AIN1. When the voltage on the positive pin AIN0 is higher than the voltage on the negative pin AIN1, the Analog Comparator output, ACO, is set. The comparator can trigger a separate interrupt, exclusive to the Analog Comparator. The user can select Interrupt triggering on comparator output rise, fall or toggle. A block diagram of the comparator and its surrounding logic is shown in Figure 13-1 on page 79.

Figure 13-1. Analog Comparator Block Diagram

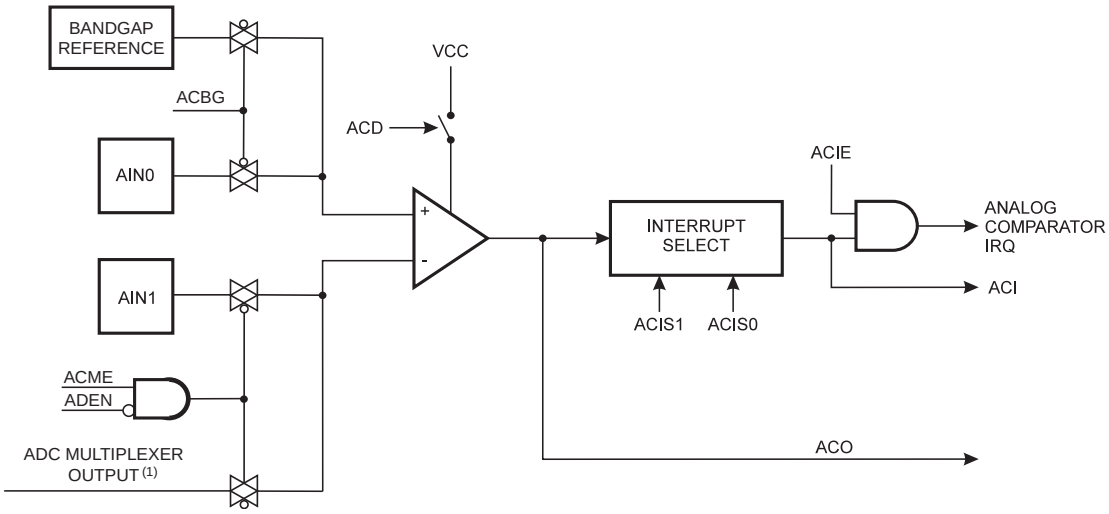

See Figure 1-1 on page 2, Table 10-5 on page 57, and Table 13-2 on page 81 for Analog Comparator pin placement.

13.1 Analog Comparator Multiplexed Input

It is possible to select any of the ADC[3:0] pins to replace the negative input to the Analog Comparator. The ADC multiplexer is used to select this input, and consequently, the ADC must be switched off to utilize this feature. If the Analog Comparator Multiplexer Enable bit (ACME in ADCSRB) is set and the ADC is switched off (ADEN in ADCSRA is zero), MUX[1:0] in ADMUX select the input pin to replace the negative input to the Analog Comparator, as shown in Table 13-1. If ACME is cleared or ADEN is set, AIN1 is applied to the negative input to the Analog Comparator.

Table 13-1. Analog Comparator Multiplexed Input

ACME	ADEN	MUX[1:0]	Analog Comparator Negative Input
0	x	xx	AIN1
1	1	xx	AIN1
1	0	00	ADC0
1	0	01	ADC1
1	0	10	ADC2
1	0	11	ADC3

13.2 Register Description

13.2.1 ADCSRB – ADC Control and Status Register

Bit	7	6	5	4	3	2	1	0	
0x03	–	ACME	–	–	–	ADTS2	ADTS1	ADTS0	ADCSRB
Read/Write	R	R/W	R	R	R	R/W	R/W	R/W	
Initial Value	0	0	0	0	0	0	0	0	

- **Bit 6 – ACME: Analog Comparator Multiplexer Enable**

When this bit is written logic one and the ADC is switched off (ADEN in ADCSRA is zero), the ADC multiplexer selects the negative input to the Analog Comparator. When this bit is written logic zero, AIN1 is applied to the negative input of the Analog Comparator. For a detailed description of this bit, see "Analog Comparator Multiplexed Input" on page 79.

13.2.2 ACSR– Analog Comparator Control and Status Register

Bit	7	6	5	4	3	2	1	0	
0x08	ACD	ACBG	ACO	ACI	ACIE	–	ACIS1	ACIS0	ACSR
Read/Write	R/W	R/W	R	R/W	R/W	R	R/W	R/W	
Initial Value	0	0	N/A	0	0	0	0	0	

- **Bit 7 – ACD: Analog Comparator Disable**

When this bit is written logic one, the power to the Analog Comparator is switched off. This bit can be set at any time to turn off the Analog Comparator. This will reduce power consumption in Active and Idle mode. When changing the ACD bit, the Analog Comparator Interrupt must be disabled by clearing the ACIE bit in ACSR. Otherwise an interrupt can occur when the bit is changed.

- **Bit 6 – ACBG: Analog Comparator Bandgap Select**

When this bit is set, a fixed bandgap reference voltage replaces the positive input to the Analog Comparator. When this bit is cleared, AIN0 is applied to the positive input of the Analog Comparator. When the bandgap reference is used as input to the Analog Comparator, it will take certain time for the voltage to stabilize. If not stabilized, the first value may give a wrong value.

- **Bit 5 – ACO: Analog Comparator Output**

The output of the Analog Comparator is synchronized and then directly connected to ACO. The synchronization introduces a delay of 1 - 2 clock cycles.

- **Bit 4 – ACI: Analog Comparator Interrupt Flag**

This bit is set by hardware when a comparator output event triggers the interrupt mode defined by ACIS1 and ACIS0. The Analog Comparator interrupt routine is executed if the ACIE bit is set and the I-bit in SREG is set. ACI is cleared by hardware when executing the corresponding interrupt handling vector. Alternatively, ACI is cleared by writing a logic one to the flag.

- **Bit 3 – ACIE: Analog Comparator Interrupt Enable**

When the ACIE bit is written logic one and the I-bit in the Status Register is set, the Analog Comparator interrupt is activated. When written logic zero, the interrupt is disabled.

- **Bit 2 – Res: Reserved Bit**

This bit is a reserved bit in the ATtiny13A and will always read as zero.

- **Bits 1:0 – ACIS[1:0]: Analog Comparator Interrupt Mode Select**

These bits determine which comparator events that trigger the Analog Comparator interrupt. The different settings are shown in Table 13-2 on page 81.

Table 13-2. ACIS1/ACIS0 Settings

ACIS1	ACIS0	Interrupt Mode
0	0	Comparator Interrupt on Output Toggle.
0	1	Reserved
1	0	Comparator Interrupt on Falling Output Edge.
1	1	Comparator Interrupt on Rising Output Edge.

When changing the ACIS1/ACIS0 bits, the Analog Comparator Interrupt must be disabled by clearing its Interrupt Enable bit in the ACSR Register. Otherwise an interrupt can occur when the bits are changed.

13.2.3 DIDR0 – Digital Input Disable Register 0

Bit	7	6	5	4	3	2	1	0	
0x14	–	–	ADC0D	ADC2D	ADC3D	ADC1D	AIN1D	AIN0D	DIDR0
Read/Write	R	R	R/W	R/W	R/W	R/W	R/W	R/W	
Initial Value	0	0	0	0	0	0	0	0	

- **Bits 1:0 – AIN1D, AIN0D: AIN[1:0] Digital Input Disable**

When this bit is written logic one, the digital input buffer on the AIN1/0 pin is disabled. The corresponding PIN Register bit will always read as zero when this bit is set. When an analog signal is applied to the AIN1/0 pin and the digital input from this pin is not needed, this bit should be written logic one to reduce power consumption in the digital input buffer.

14. Analog to Digital Converter

14.1 Features

- **10-bit Resolution**
- **0.5 LSB Integral Non-linearity**
- **± 2 LSB Absolute Accuracy**
- **13 - 260 µs Conversion Time**
- **Up to 15 kSPS at Maximum Resolution**
- **Four Multiplexed Single Ended Input Channels**
- **Optional Left Adjustment for ADC Result Readout**
- **0 - V_{CC} ADC Input Voltage Range**
- **Selectable 1.1V ADC Reference Voltage**
- **Free Running or Single Conversion Mode**
- **ADC Start Conversion by Auto Triggering on Interrupt Sources**
- **Interrupt on ADC Conversion Complete**
- **Sleep Mode Noise Canceler**

14.2 Overview

The ATtiny13A features a 10-bit successive approximation ADC. A block diagram of the ADC is shown in Figure 14-1.

Figure 14-1. Analog to Digital Converter Block Schematic

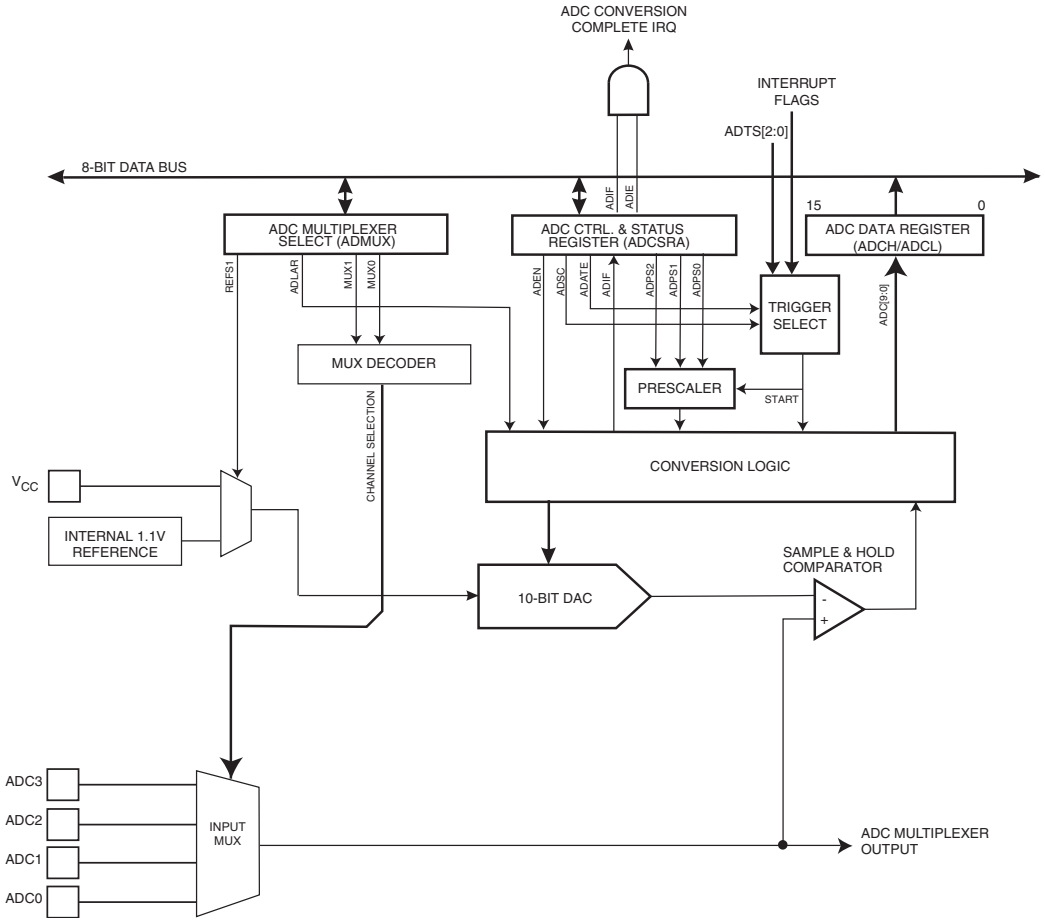

The ADC is connected to a 4-channel Analog Multiplexer which allows four single-ended voltage inputs constructed from the pins of Port B. The single-ended voltage inputs refer to 0V (GND).

The ADC contains a Sample and Hold circuit which ensures that the input voltage to the ADC is held at a constant level during conversion. Internal reference voltages of nominally 1.1V or V_{CC} are provided On-chip.

14.3 Operation

The ADC converts an analog input voltage to a 10-bit digital value through successive approximation. The minimum value represents GND and the maximum value represents the voltage on V_{CC} or an internal 1.1V reference voltage.

The analog input channel is selected by writing to the MUX bits in ADMUX. Any of the ADC input pins, can be selected as single ended inputs to the ADC.

The ADC is enabled by setting the ADC Enable bit, ADEN in ADCSRA. Voltage reference and input channel selections will not go into effect until ADEN is set. The ADC does not consume power when ADEN is cleared, so it is recommended to switch off the ADC before entering power saving sleep modes.

The ADC generates a 10-bit result which is presented in the ADC Data Registers, ADCH and ADCL. By default, the result is presented right adjusted, but can optionally be presented left adjusted by setting the ADLAR bit in ADMUX.

If the result is left adjusted and no more than 8-bit precision is required, it is sufficient to read ADCH. Otherwise, ADCL must be read first, then ADCH, to ensure that the content of the data registers belongs to the same conversion. Once ADCL is read, ADC access to data registers is blocked. This means that if ADCL has been read, and a conversion completes before ADCH is read, neither register is updated and the result from the conversion is lost. When ADCH is read, ADC access to the ADCH and ADCL Registers is re-enabled.

The ADC has its own interrupt which can be triggered when a conversion completes. When ADC access to the data registers is prohibited between reading of ADCH and ADCL, the interrupt will trigger even if the result is lost.

14.4 Starting a Conversion

A single conversion is started by writing a logical one to the ADC Start Conversion bit, ADSC. This bit stays high as long as the conversion is in progress and will be cleared by hardware when the conversion is completed. If a different data channel is selected while a conversion is in progress, the ADC will finish the current conversion before performing the channel change.

Alternatively, a conversion can be triggered automatically by various sources. Auto Triggering is enabled by setting the ADC Auto Trigger Enable bit, ADATE in ADCSRA. The trigger source is selected by setting the ADC Trigger Select bits, ADTS in ADCSRB (see description of the ADTS bits for a list of the trigger sources). When a positive edge occurs on the selected trigger signal, the ADC prescaler is reset and a conversion is started. This provides a method of starting conversions at fixed intervals. If the trigger signal still is set when the conversion completes, a new conversion will not be started. If another positive edge occurs on the trigger signal during conversion, the edge will be ignored. Note that an Interrupt Flag will be set even if the specific interrupt is disabled or the Global Interrupt Enable bit in SREG is cleared. A conversion can thus be triggered without causing an interrupt. However, the Interrupt Flag must be cleared in order to trigger a new conversion at the next interrupt event.

Figure 14-2. ADC Auto Trigger Logic

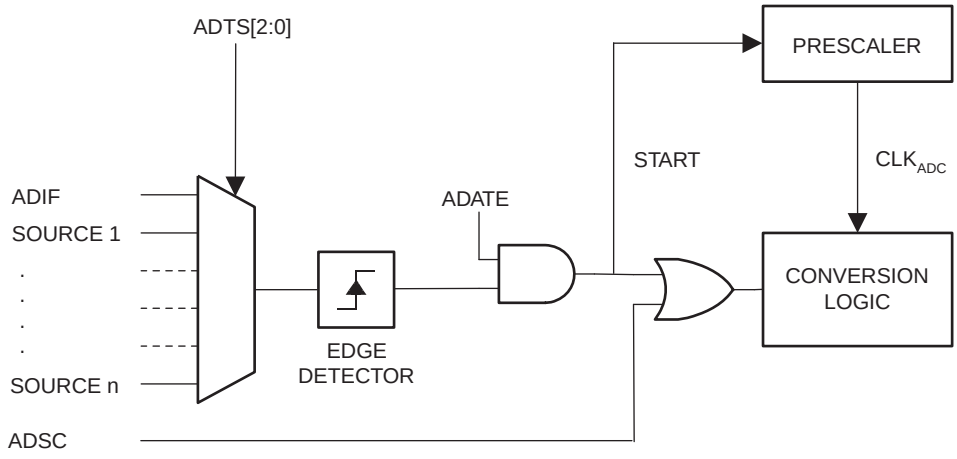

Using the ADC Interrupt Flag as a trigger source makes the ADC start a new conversion as soon as the ongoing conversion has finished. The ADC then operates in Free Running mode, constantly sampling and updating the ADC Data Register. The first conversion must be started by writing a logical one to the ADSC bit in ADCSRA. In this mode the ADC will perform successive conversions independently of whether the ADC Interrupt Flag, ADIF is cleared or not.

If Auto Triggering is enabled, single conversions can be started by writing ADSC in ADCSRA to one. ADSC can also be used to determine if a conversion is in progress. The ADSC bit will be read as one during a conversion, independently of how the conversion was started.

14.5 Prescaling and Conversion Timing

By default, the successive approximation circuitry requires an input clock frequency between 50 kHz and 200 kHz to get maximum resolution. If a lower resolution than 10 bits is needed, the input clock frequency to the ADC can be higher than 200 kHz to get a higher sample rate.

Figure 14-3. ADC Prescaler

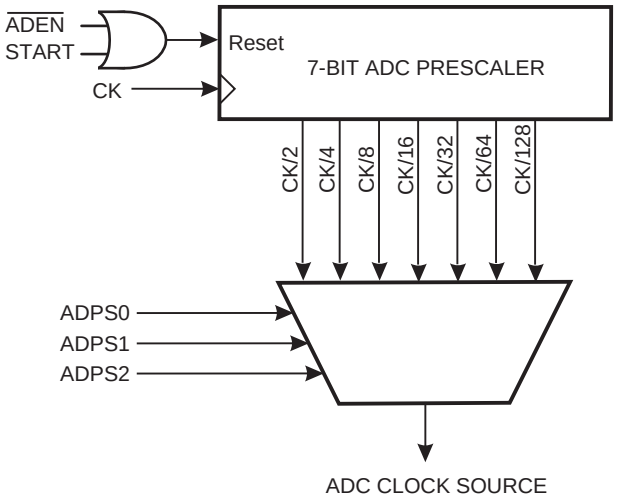

The ADC module contains a prescaler, which generates an acceptable ADC clock frequency from any CPU frequency above 100 kHz. The prescaling is set by the ADPS bits in ADCSRA.

The prescaler starts counting from the moment the ADC is switched on by setting the ADEN bit in ADCSRA. The prescaler keeps running for as long as the ADEN bit is set, and is continuously reset when ADEN is low.

When initiating a single ended conversion by setting the ADSC bit in ADCSRA, the conversion starts at the following rising edge of the ADC clock cycle.

A normal conversion takes 13 ADC clock cycles. The first conversion after the ADC is switched on (ADEN in ADCSRA is set) takes 25 ADC clock cycles in order to initialize the analog circuitry, as shown in Figure 14-4 below.

Figure 14-4. ADC Timing Diagram, First Conversion (Single Conversion Mode)

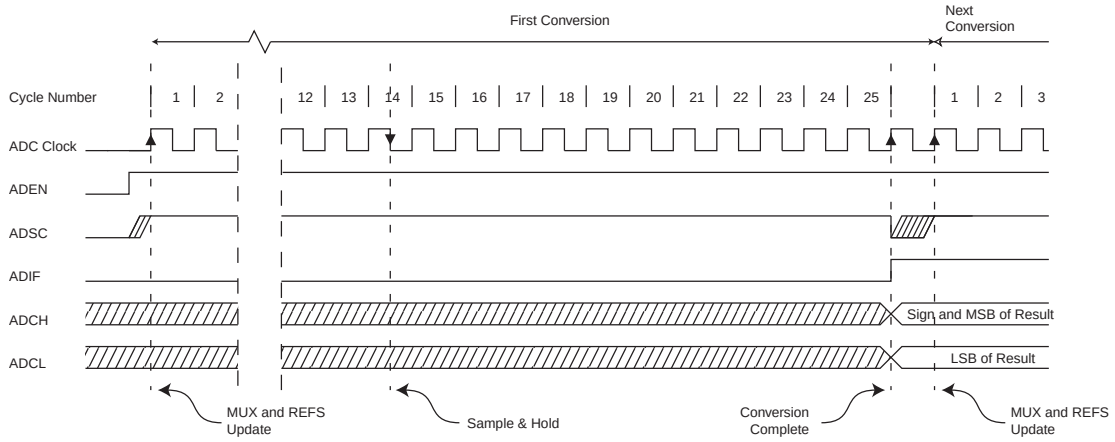

When the bandgap reference voltage is used as input to the ADC, it will take a certain time for the voltage to stabilize. If not stabilized, the first value read after the first conversion may be wrong.

The actual sample-and-hold takes place 1.5 ADC clock cycles after the start of a normal conversion and 14.5 ADC clock cycles after the start of an first conversion. When a conversion is complete, the result is written to the ADC Data Registers, and ADIF is set. In Single Conversion mode, ADSC is cleared simultaneously. The software may then set ADSC again, and a new conversion will be initiated on the first rising ADC clock edge.

Figure 14-5. ADC Timing Diagram, Single Conversion

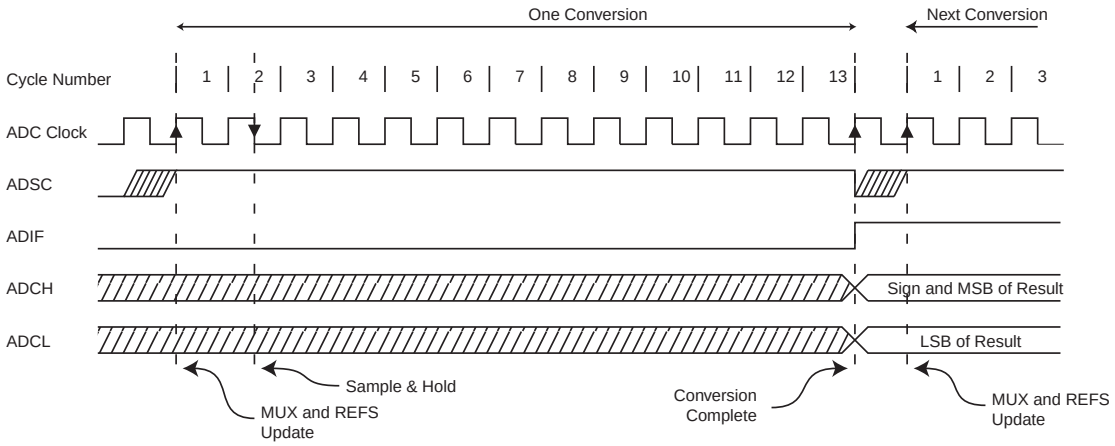

When Auto Triggering is used, the prescaler is reset when the trigger event occurs, as shown in Figure 14-6 below. This assures a fixed delay from the trigger event to the start of conversion. In this mode, the sample-and-hold takes place two ADC clock cycles after the rising edge on the trigger source signal. Three additional CPU clock cycles are used for synchronization logic.

Figure 14-6. ADC Timing Diagram, Auto Triggered Conversion

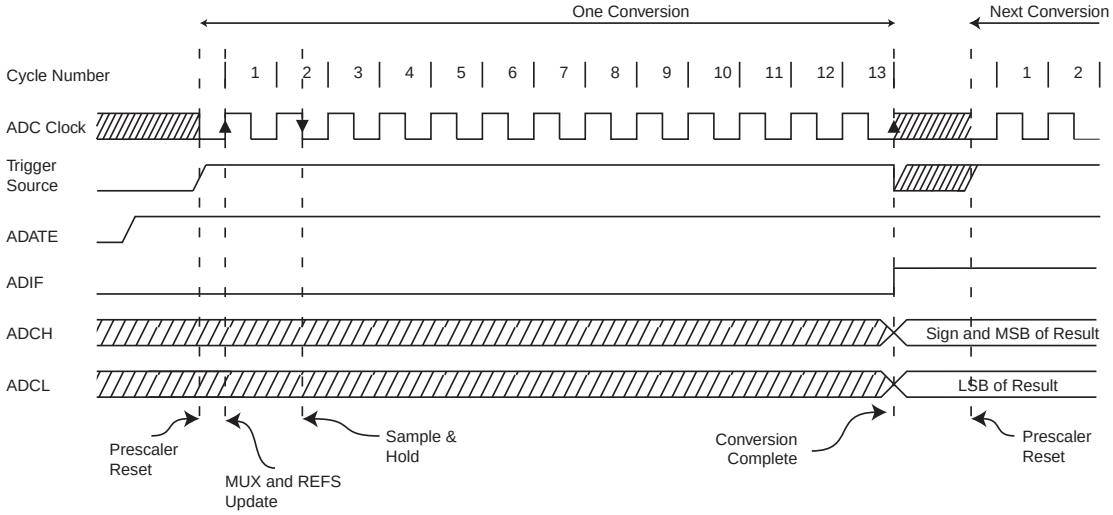

In Free Running mode, a new conversion will be started immediately after the conversion completes, while ADSC remains high.

Figure 14-7. ADC Timing Diagram, Free Running Conversion

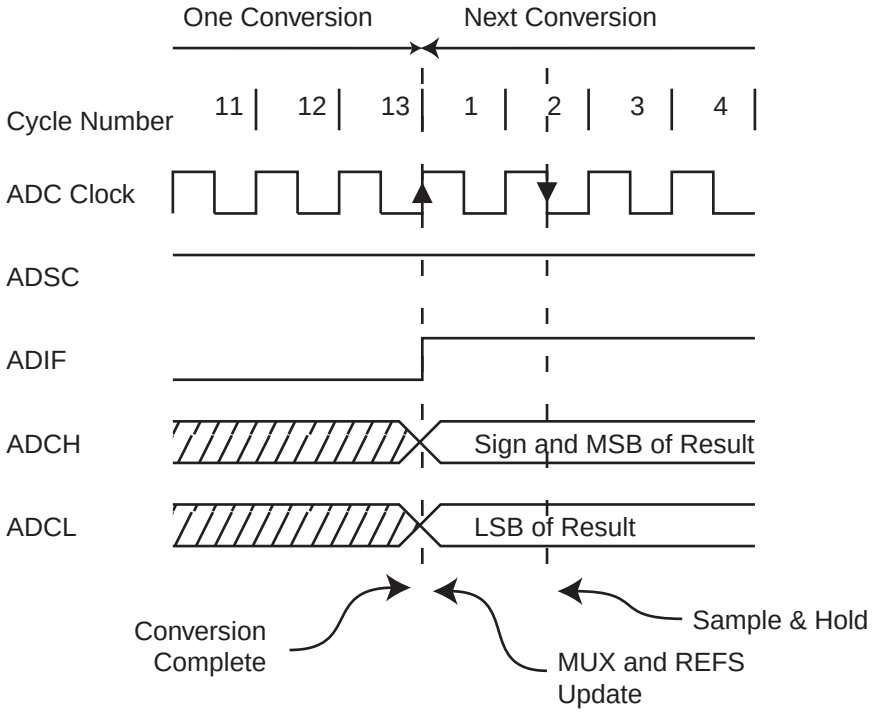

For a summary of conversion times, see Table 14-1.

Table 14-1. ADC Conversion Time

Condition	Sample & Hold (Cycles from Start of Conversion)	Conversion Time (Cycles)
First conversion	13.5	25
Normal conversions	1.5	13
Auto Triggered conversions	2	13.5

14.6 Changing Channel or Reference Selection

The MUXn and REFS[1:0] bits in the ADMUX Register are single buffered through a temporary register to which the CPU has random access. This ensures that the channels and reference selection only takes place at a safe point during the conversion. The channel and reference selection is continuously updated until a conversion is started. Once the conversion starts, the channel and reference selection is locked to ensure a sufficient sampling time for the ADC. Continuous updating resumes in the last ADC clock cycle before the conversion completes (ADIF in ADCSRA is set). Note that the conversion starts on the following rising ADC clock edge after ADSC is written. The user is thus advised not to write new channel or reference selection values to ADMUX until one ADC clock cycle after ADSC is written.

If Auto Triggering is used, the exact time of the triggering event can be indeterministic. Special care must be taken when updating the ADMUX Register, in order to control which conversion will be affected by the new settings.

If both ADATE and ADEN is written to one, an interrupt event can occur at any time. If the ADMUX Register is changed in this period, the user cannot tell if the next conversion is based on the old or the new settings. ADMUX can be safely updated in the following ways:

- When ADATE or ADEN is cleared.
- During conversion, minimum one ADC clock cycle after the trigger event.
- After a conversion, before the Interrupt Flag used as trigger source is cleared.

When updating ADMUX in one of these conditions, the new settings will affect the next ADC conversion.

14.6.1 ADC Input Channels

When changing channel selections, the user should observe the following guidelines to ensure that the correct channel is selected:

In Single Conversion mode, always select the channel before starting the conversion. The channel selection may be changed one ADC clock cycle after writing one to ADSC. However, the simplest method is to wait for the conversion to complete before changing the channel selection.

In Free Running mode, always select the channel before starting the first conversion. The channel selection may be changed one ADC clock cycle after writing one to ADSC. However, the simplest method is to wait for the first conversion to complete, and then change the channel selection. Since the next conversion has already started automatically, the next result will reflect the previous channel selection. Subsequent conversions will reflect the new channel selection.

14.6.2 ADC Voltage Reference

The reference voltage for the ADC (V_{REF}) indicates the conversion range for the ADC. Single ended channels that exceed V_{REF} will result in codes close to 0x3FF. V_{REF} can be selected as either V_{CC}, or internal 1.1V reference. The first ADC conversion result after switching reference voltage source may be inaccurate, and the user is advised to discard this result.

14.7 ADC Noise Canceler

The ADC features a noise canceler that enables conversion during sleep mode to reduce noise induced from the CPU core and other I/O peripherals. The noise canceler can be used with ADC Noise Reduction and Idle mode. To make use of this feature, the following procedure should be used:

- Make sure that the ADC is enabled and is not busy converting. Single Conversion mode must be selected and the ADC conversion complete interrupt must be enabled.
- Enter ADC Noise Reduction mode (or Idle mode). The ADC will start a conversion once the CPU has been halted.
- If no other interrupts occur before the ADC conversion completes, the ADC interrupt will wake up the CPU and execute the ADC Conversion Complete interrupt routine. If another interrupt wakes up the CPU before the ADC conversion is complete, the interrupt will be executed, and an ADC Conversion Complete interrupt request will be generated when the ADC conversion completes. The CPU will remain in active mode until a new sleep command is executed.

Note that the ADC will not be automatically turned off when entering other sleep modes than Idle mode and ADC Noise Reduction mode. The user is advised to write zero to ADEN before entering such sleep modes to avoid excessive power consumption.

14.8 Analog Input Circuitry

The analog input circuitry for single ended channels is shown in Figure 14-8 An analog source applied to ADCn is subjected to pin capacitance and input leakage of that pin, regardless if the channel is chosen as input for the ADC, or not. When the channel is selected, the source drives the S/H capacitor through the series resistance (combined resistance in input path).

Figure 14-8. Analog Input Circuitry

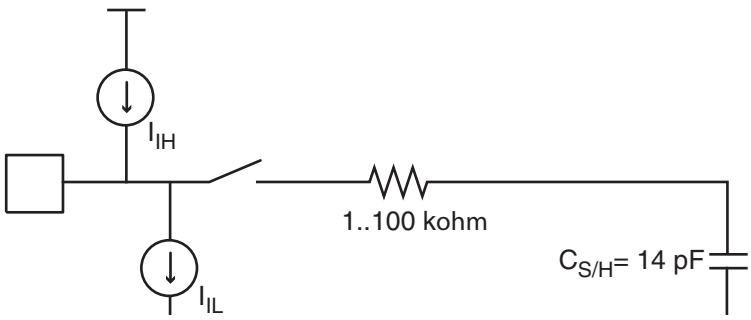

Note: The capacitor in the figure depicts the total capacitance, including the sample/hold capacitor and any stray or parasitic capacitance inside the device. The value given is worst case.

The ADC is optimized for analog signals with an output impedance of approximately 10 kΩ or less. If such a source is used, the sampling time will be negligible. If a source with higher impedance is used, the sampling time will depend on how long time the source needs to charge the S/H capacitor, with can vary widely. The user is recommended to only use low impedant sources with slowly varying signals, since this minimizes the required charge transfer to the S/H capacitor.

Signal components higher than the Nyquist frequency ($f_{ADC}/2$) should not be present to avoid distortion from unpredictable signal convolution. The user is advised to remove high frequency components with a low-pass filter before applying the signals as inputs to the ADC.

14.9 Analog Noise Canceling Techniques

Digital circuitry inside and outside the device generates EMI which might affect the accuracy of analog measurements. When conversion accuracy is critical, the noise level can be reduced by applying the following techniques:

- Keep analog signal paths as short as possible.
- Make sure analog tracks run over the analog ground plane.
- Keep analog tracks well away from high-speed switching digital tracks.
- If any port pin is used as a digital output, it mustn't switch while a conversion is in progress.
- Place bypass capacitors as close to V_{CC} and GND pins as possible.

Where high ADC accuracy is required it is recommended to use ADC Noise Reduction Mode, as described in Section 14.7 on page 88. This is especially the case when system clock frequency is above 1 MHz. A good system design with properly placed, external bypass capacitors does reduce the need for using ADC Noise Reduction Mode

14.10 ADC Accuracy Definitions

An n-bit single-ended ADC converts a voltage linearly between GND and V_{REF} in 2^n steps (LSBs). The lowest code is read as 0, and the highest code is read as 2^n-1.

Several parameters describe the deviation from the ideal behavior:

- Offset: The deviation of the first transition (0x000 to 0x001) compared to the ideal transition (at 0.5 LSB). Ideal value: 0 LSB.

Figure 14-9. Offset Error

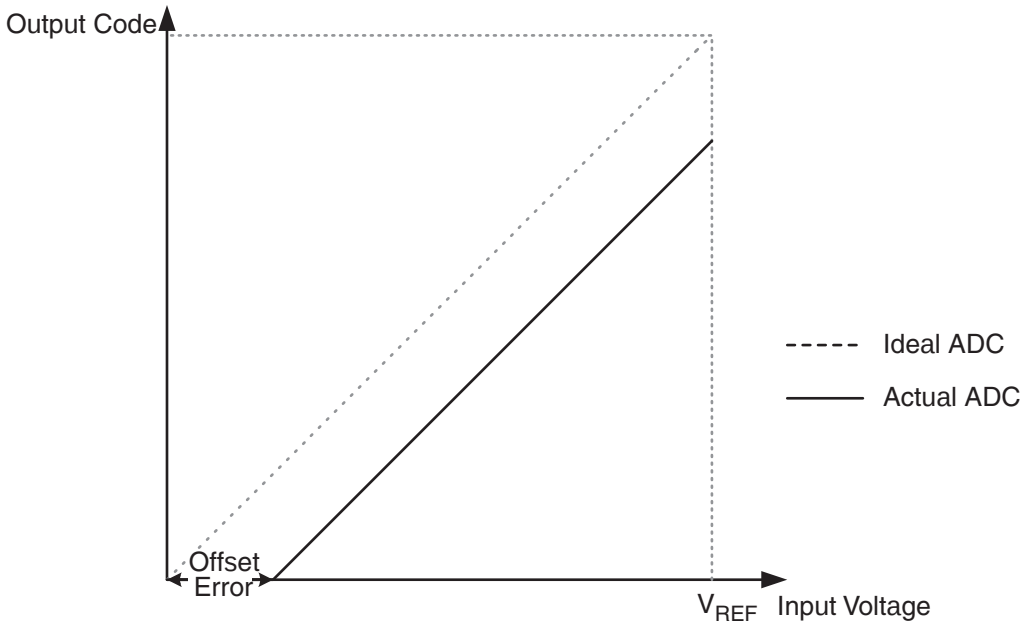

- Gain Error: After adjusting for offset, the Gain Error is found as the deviation of the last transition (0x3FE to 0x3FF) compared to the ideal transition (at 1.5 LSB below maximum). Ideal value: 0 LSB

Figure 14-10. Gain Error

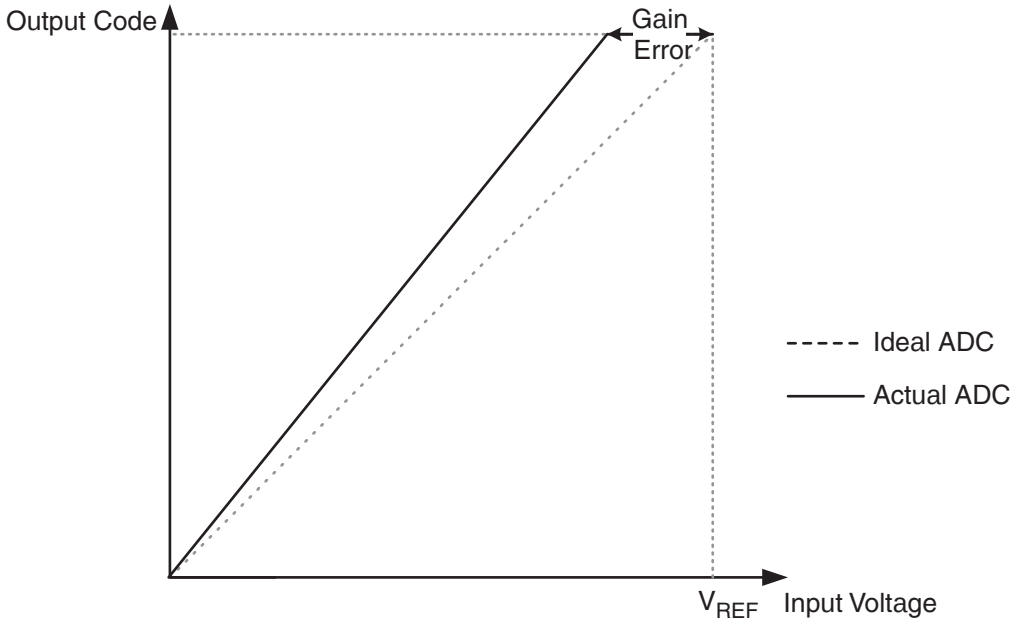

- Integral Non-linearity (INL): After adjusting for offset and gain error, the INL is the maximum deviation of an actual transition compared to an ideal transition for any code. Ideal value: 0 LSB.

Figure 14-11. Integral Non-linearity (INL)

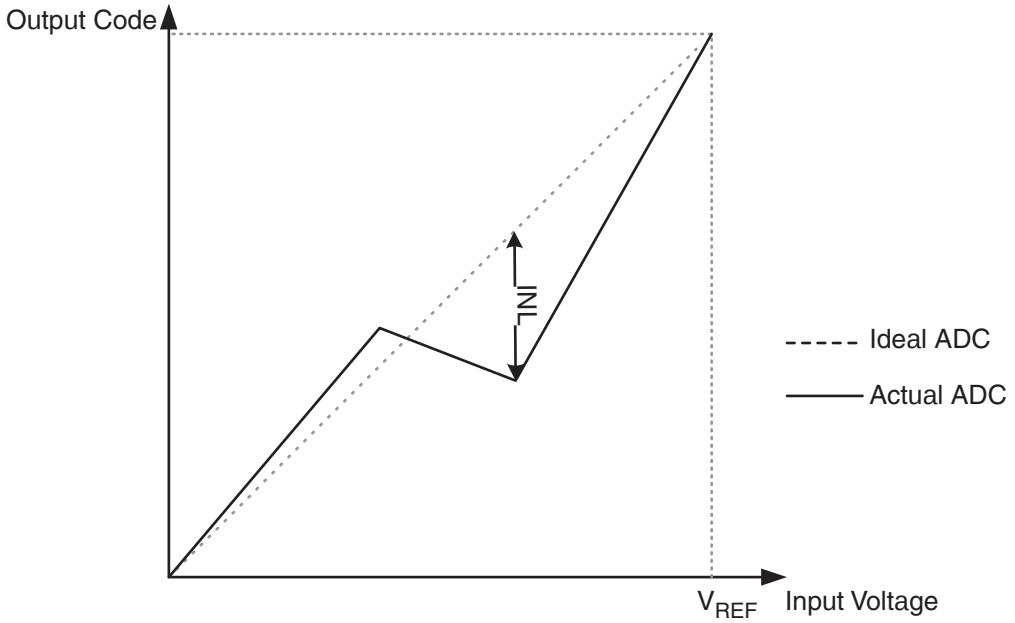

- Differential Non-linearity (DNL): The maximum deviation of the actual code width (the interval between two adjacent transitions) from the ideal code width (1 LSB). Ideal value: 0 LSB.

Figure 14-12. Differential Non-linearity (DNL)

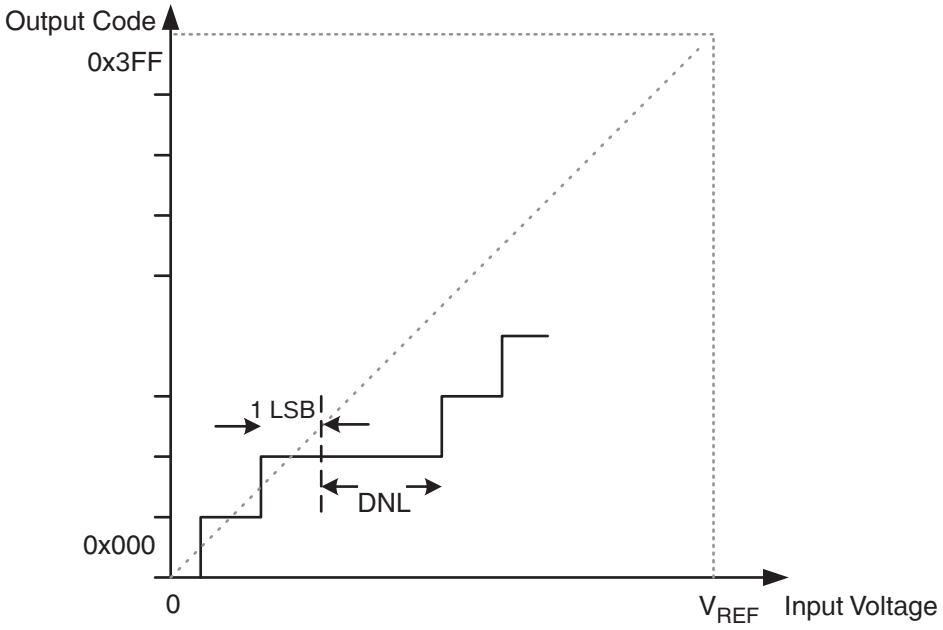

- Quantization Error: Due to the quantization of the input voltage into a finite number of codes, a range of input voltages (1 LSB wide) will code to the same value. Always ± 0.5 LSB.

- Absolute Accuracy: The maximum deviation of an actual (unadjusted) transition compared to an ideal transition for any code. This is the compound effect of offset, gain error, differential error, non-linearity, and quantization error. Ideal value: ± 0.5 LSB.

14.11 ADC Conversion Result

After the conversion is complete (ADIF is high), the conversion result can be found in the ADC Result Registers (ADCL, ADCH).

For single ended conversion, the result is

$$ADC = \frac{V_{IN} \cdot 1024}{V_{REF}}$$

where V_{IN} is the voltage on the selected input pin and V_{REF} the selected voltage reference (see Table 14-2 on page 92 and Table 14-3 on page 93). 0x000 represents analog ground, and 0x3FF represents the selected reference voltage minus one LSB.

14.12 Register Description

14.12.1 ADMUX – ADC Multiplexer Selection Register

Bit	7	6	5	4	3	2	1	0	
0x07	–	REFS0	ADLAR	–	–	–	MUX1	MUX0	ADMUX
Read/Write	R	R/W	R/W	R	R	R	R/W	R/W	
Initial Value	0	0	0	0	0	0	0	0	

- **Bits 7, 4:2 – Res: Reserved Bits**

These bits are reserved bits in the ATtiny13A and will always read as zero.

- **Bit 6 – REFS0: Reference Selection Bit**

This bit selects the voltage reference for the ADC, as shown in Table 14-2. If this bit is changed during a conversion, the change will not go in effect until this conversion is complete (ADIF in ADCSRA is set).

Table 14-2. Voltage Reference Selections for ADC

REFS0	Voltage Reference Selection
0	V_{CC} used as analog reference.
1	Internal Voltage Reference.

- **Bit 5 – ADLAR: ADC Left Adjust Result**

The ADLAR bit affects the presentation of the ADC conversion result in the ADC Data Register. Write one to ADLAR to left adjust the result. Otherwise, the result is right adjusted. Changing the ADLAR bit will affect the ADC Data Register immediately, regardless of any ongoing conversions. For a complete description of this bit, see "ADCL and ADCH – The ADC Data Register" on page 94.

- **Bits 1:0 – MUX[1:0]: Analog Channel Selection Bits**

The value of these bits selects which combination of analog inputs are connected to the ADC. See Table 14-3 for details. If these bits are changed during a conversion, the change will not go in effect until this conversion is complete (ADIF in ADCSRA is set).

Table 14-3. Input Channel Selections

MUX[1:0]	Single Ended Input
00	ADC0 (PB5)
01	ADC1 (PB2)
10	ADC2 (PB4)
11	ADC3 (PB3)

14.12.2 ADCSRA – ADC Control and Status Register A

Bit	7	6	5	4	3	2	1	0	
0x06	ADEN	ADSC	ADATE	ADIF	ADIE	ADPS2	ADPS1	ADPS0	ADCSRA
Read/Write	R/W	R/W	R/W	R/W	R/W	R/W	R/W	R/W	
Initial Value	0	0	0	0	0	0	0	0	

- **Bit 7 – ADEN: ADC Enable**

Writing this bit to one enables the ADC. By writing it to zero, the ADC is turned off. Turning the ADC off while a conversion is in progress, will terminate this conversion.

- **Bit 6 – ADSC: ADC Start Conversion**

In Single Conversion mode, write this bit to one to start each conversion. In Free Running mode, write this bit to one to start the first conversion. The first conversion after ADSC has been written after the ADC has been enabled, or if ADSC is written at the same time as the ADC is enabled, will take 25 ADC clock cycles instead of the normal 13. This first conversion performs initialization of the ADC.

ADSC will read as one as long as a conversion is in progress. When the conversion is complete, it returns to zero. Writing zero to this bit has no effect.

- **Bit 5 – ADATE: ADC Auto Trigger Enable**

When this bit is written to one, Auto Triggering of the ADC is enabled. The ADC will start a conversion on a positive edge of the selected trigger signal. The trigger source is selected by setting the ADC Trigger Select bits, ADTS in ADCSRB.

- **Bit 4 – ADIF: ADC Interrupt Flag**

This bit is set when an ADC conversion completes and the data registers are updated. The ADC Conversion Complete Interrupt is executed if the ADIE bit and the I-bit in SREG are set. ADIF is cleared by hardware when executing the corresponding interrupt handling vector. Alternatively, ADIF is cleared by writing a logical one to the flag. Beware that if doing a Read-Modify-Write on ADCSRA, a pending interrupt can be disabled. This also applies if the SBI and CBI instructions are used.

- **Bit 3 – ADIE: ADC Interrupt Enable**

When this bit is written to one and the I-bit in SREG is set, the ADC Conversion Complete Interrupt is activated.

- **Bits 2:0 – ADPS[2:0]: ADC Prescaler Select Bits**

These bits determine the division factor between the system clock frequency and the input clock to the ADC.

Table 14-4. ADC Prescaler Selections

ADPS2	ADPS1	ADPS0	Division Factor
0	0	0	2
0	0	1	2
0	1	0	4
0	1	1	8
1	0	0	16
1	0	1	32
1	1	0	64
1	1	1	128

14.12.3 ADCL and ADCH – The ADC Data Register

14.12.3.1 ADLAR = 0

Bit	15	14	13	12	11	10	9	8	
0x05	–	–	–	–	–	–	ADC9	ADC8	ADCH
0x04	ADC7	ADC6	ADC5	ADC4	ADC3	ADC2	ADC1	ADC0	ADCL
	7	6	5	4	3	2	1	0	
Read/Write	R	R	R	R	R	R	R	R	
	R	R	R	R	R	R	R	R	
Initial Value	0	0	0	0	0	0	0	0	
	0	0	0	0	0	0	0	0	

14.12.3.2 ADLAR = 1

Bit	15	14	13	12	11	10	9	8	
0x05	ADC9	ADC8	ADC7	ADC6	ADC5	ADC4	ADC3	ADC2	ADCH
0x04	ADC1	ADC0	–	–	–	–	–	–	ADCL
	7	6	5	4	3	2	1	0	
Read/Write	R	R	R	R	R	R	R	R	
	R	R	R	R	R	R	R	R	
Initial Value	0	0	0	0	0	0	0	0	
	0	0	0	0	0	0	0	0	

When an ADC conversion is complete, the result is found in these two registers.

When ADCL is read, the ADC Data Register is not updated until ADCH is read. Consequently, if the result is left adjusted and no more than 8-bit precision is required, it is sufficient to read ADCH. Otherwise, ADCL must be read first, then ADCH.

The ADLAR bit in ADMUX, and the MUXn bits in ADMUX affect the way the result is read from the registers. If ADLAR is set, the result is left adjusted. If ADLAR is cleared (default), the result is right adjusted.

- **ADC[9:0]: ADC Conversion Result**

These bits represent the result from the conversion, as detailed in "ADC Conversion Result" on page 92.

14.12.4 ADCSRB – ADC Control and Status Register B

Bit	7	6	5	4	3	2	1	0	
0x03	–	ACME	–	–	–	ADTS2	ADTS1	ADTS0	ADCSRB
Read/Write	R	R/W	R	R	R	R/W	R/W	R/W	
Initial Value	0	0	0	0	0	0	0	0	

- **Bits 7, 5:3 – Res: Reserved Bits**

These bits are reserved bits in the ATtiny13A and will always read as zero.

- **Bits 2:0 – ADTS[2:0]: ADC Auto Trigger Source**

If ADATE in ADCSRA is written to one, the value of these bits selects which source will trigger an ADC conversion. If ADATE is cleared, the ADTS[2:0] settings will have no effect. A conversion will be triggered by the rising edge of the selected Interrupt Flag. Note that switching from a trigger source that is cleared to a trigger source that is set, will generate a positive edge on the trigger signal. If ADEN in ADCSRA is set, this will start a conversion. Switching to Free Running mode (ADTS[2:0]=0) will not cause a trigger event, even if the ADC Interrupt Flag is set.

Table 14-5. ADC Auto Trigger Source Selections

ADTS2	ADTS1	ADTS0	Trigger Source
0	0	0	Free Running mode
0	0	1	Analog Comparator
0	1	0	External Interrupt Request 0
0	1	1	Timer/Counter Compare Match A
1	0	0	Timer/Counter Overflow
1	0	1	Timer/Counter Compare Match B
1	1	0	Pin Change Interrupt Request

14.12.5 DIDR0 – Digital Input Disable Register 0

Bit	7	6	5	4	3	2	1	0	
0x14	–	–	ADC0D	ADC2D	ADC3D	ADC1D	AIN1D	AIN0D	DIDR0
Read/Write	R	R	R/W	R/W	R/W	R/W	R/W	R/W	
Initial Value	0	0	0	0	0	0	0	0	

- **Bits 5:2 – ADC3D:ADC0D: ADC[3:0] Digital Input Disable**

When a bit is written logic one, the digital input buffer on the corresponding ADC pin is disabled. The corresponding PIN register bit will always read as zero when this bit is set. When an analog signal is applied to the ADC[7:0] pin and the digital input from this pin is not needed, this bit should be written logic one to reduce power consumption in the digital input buffer.

15. debugWIRE On-chip Debug System

15.1 Features

- **Complete Program Flow Control**
- **Emulates All On-chip Functions, Both Digital and Analog, except RESET Pin**
- **Real-time Operation**
- **Symbolic Debugging Support (Both at C and Assembler Source Level, or for Other HLLs)**
- **Unlimited Number of Program Break Points (Using Software Break Points)**
- **Non-intrusive Operation**
- **Electrical Characteristics Identical to Real Device**
- **Automatic Configuration System**
- **High-Speed Operation**
- **Programming of Non-volatile Memories**

15.2 Overview

The debugWIRE On-chip debug system uses a One-wire, bi-directional interface to control the program flow, execute AVR instructions in the CPU and to program the different non-volatile memories.

15.3 Physical Interface

When the debugWIRE Enable (DWEN) fuse is programmed and lock bits are unprogrammed, the debugWIRE system within the target device is activated. The RESET port pin is configured as a wire-AND (open-drain) bi-directional I/O pin with pull-up enabled and becomes the communication gateway between target and emulator.

Figure 15-1 shows the schematic of a target MCU, with debugWIRE enabled, and the emulator connector. The system clock is not affected by debugWIRE and will always be the clock source selected by the CKSEL fuses.

Figure 15-1. The debugWIRE Setup

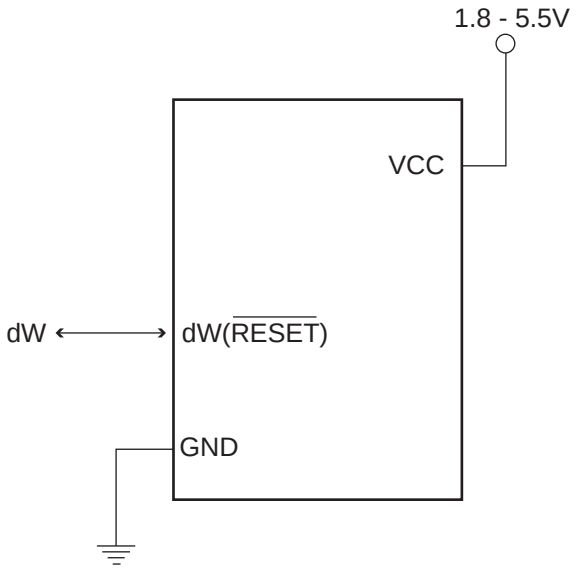

When designing a system where debugWIRE will be used, the following must be observed:

- Pull-Up resistor on the dW/(RESET) line must be in the range of 10k to 20 kΩ. However, the pull-up resistor is optional.
- Connecting the RESET pin directly to V_{CC} will not work.
- Capacitors inserted on the RESET pin must be disconnected when using debugWire.
- All external reset sources must be disconnected.

15.4 Software Break Points

debugWIRE supports Program memory Break Points by the AVR Break instruction. Setting a Break Point in AVR Studio® will insert a BREAK instruction in the Program memory. The instruction replaced by the BREAK instruction will be stored. When program execution is continued, the stored instruction will be executed before continuing from the Program memory. A break can be inserted manually by putting the BREAK instruction in the program.

The Flash must be re-programmed each time a Break Point is changed. This is automatically handled by AVR Studio through the debugWIRE interface. The use of Break Points will therefore reduce the Flash Data retention. Devices used for debugging purposes should not be shipped to end customers.

15.5 Limitations of debugWIRE

The debugWIRE communication pin (dW) is physically located on the same pin as External Reset (RESET). An External Reset source is therefore not supported when the debugWIRE is enabled.

The debugWIRE system accurately emulates all I/O functions when running at full speed, i.e., when the program in the CPU is running. When the CPU is stopped, care must be taken while accessing some of the I/O Registers via the debugger (AVR Studio). See the debugWIRE documentation for detailed description of the limitations.

The debugWIRE interface is asynchronous, which means that the debugger needs to synchronize to the system clock. If the system clock is changed by software (e.g. by writing CLKPS bits) communication via debugWIRE may fail. Also, clock frequencies below 100 kHz may cause communication problems.

A programmed DWEN fuse enables some parts of the clock system to be running in all sleep modes. This will increase the power consumption while in sleep. Thus, the DWEN fuse should be disabled when debugWire is not used.

15.6 Register Description

The following section describes the registers used with the debugWire.

15.6.1 DWDR –debugWire Data Register

Bit	7	6	5	4	3	2	1	0	
0x2E	DWDR[7:0]								DWDR
Read/Write	R/W	R/W	R/W	R/W	R/W	R/W	R/W	R/W	
Initial Value	0	0	0	0	0	0	0	0	

The DWDR Register provides a communication channel from the running program in the MCU to the debugger. This register is only accessible by the debugWIRE and can therefore not be used as a general purpose register in the normal operations.

16. Self-Programming the Flash

The device provides a Self-Programming mechanism for downloading and uploading program code by the MCU itself. The Self-Programming can use any available data interface and associated protocol to read code and write (program) that code into the Program memory. The SPM instruction is disabled by default but it can be enabled by programming the SELFPRGEN fuse (to “0”).

The Program memory is updated in a page by page fashion. Before programming a page with the data stored in the temporary page buffer, the page must be erased. The temporary page buffer is filled one word at a time using SPM and the buffer can be filled either before the Page Erase command or between a Page Erase and a Page Write operation:

Alternative 1, fill the buffer before a Page Erase

- Fill temporary page buffer
- Perform a Page Erase
- Perform a Page Write

Alternative 2, fill the buffer after Page Erase

- Perform a Page Erase
- Fill temporary page buffer
- Perform a Page Write

If only a part of the page needs to be changed, the rest of the page must be stored (for example in the temporary page buffer) before the erase, and then be re-written. When using alternative 1, the Boot Loader provides an effective Read-Modify-Write feature which allows the user software to first read the page, do the necessary changes, and then write back the modified data. If alternative 2 is used, it is not possible to read the old data while loading since the page is already erased. The temporary page buffer can be accessed in a random sequence. It is essential that the page address used in both the Page Erase and Page Write operation is addressing the same page.

16.1 Performing Page Erase by SPM

To execute Page Erase, set up the address in the Z-pointer, write “00000011” to SPMCSR and execute SPM within four clock cycles after writing SPMCSR. The data in R1 and R0 is ignored. The page address must be written to PCPAGE in the Z-register. Other bits in the Z-pointer will be ignored during this operation.

Note: The CPU is halted during the Page Erase operation.

16.2 Filling the Temporary Buffer (Page Loading)

To write an instruction word, set up the address in the Z-pointer and data in R1:R0, write “00000001” to SPMCSR and execute SPM within four clock cycles after writing SPMCSR. The content of PCWORD in the Z-register is used to address the data in the temporary buffer. The temporary buffer will auto-erase after a Page Write operation or by writing the CTPB bit in SPMCSR. It is also erased after a system reset. Note that it is not possible to write more than one time to each address without erasing the temporary buffer.

If the EEPROM is written in the middle of an SPM Page Load operation, all data loaded will be lost.

16.3 Performing a Page Write

To execute Page Write, set up the address in the Z-pointer, write “00000101” to SPMCSR and execute SPM within four clock cycles after writing SPMCSR. The data in R1 and R0 is ignored. The page address must be written to PCPAGE. Other bits in the Z-pointer must be written to zero during this operation.

Note: The CPU is halted during the Page Write operation.

16.4 Addressing the Flash During Self-Programming

The Z-pointer is used to address the SPM commands.

Bit	15	14	13	12	11	10	9	8
ZH (R31)	Z15	Z14	Z13	Z12	Z11	Z10	Z9	Z8
ZL (R30)	Z7	Z6	Z5	Z4	Z3	Z2	Z1	Z0
	7	6	5	4	3	2	1	0

Since the Flash is organized in pages (see Table 17-5 on page 105), the Program Counter can be treated as having two different sections. One section, consisting of the least significant bits, is addressing the words within a page, while the most significant bits are addressing the pages. This is shown in Figure 16-1. Note that the Page Erase and Page Write operations are addressed independently. Therefore it is of major importance that the software addresses the same page in both the Page Erase and Page Write operation.

Figure 16-1. Addressing the Flash During SPM[(1)]

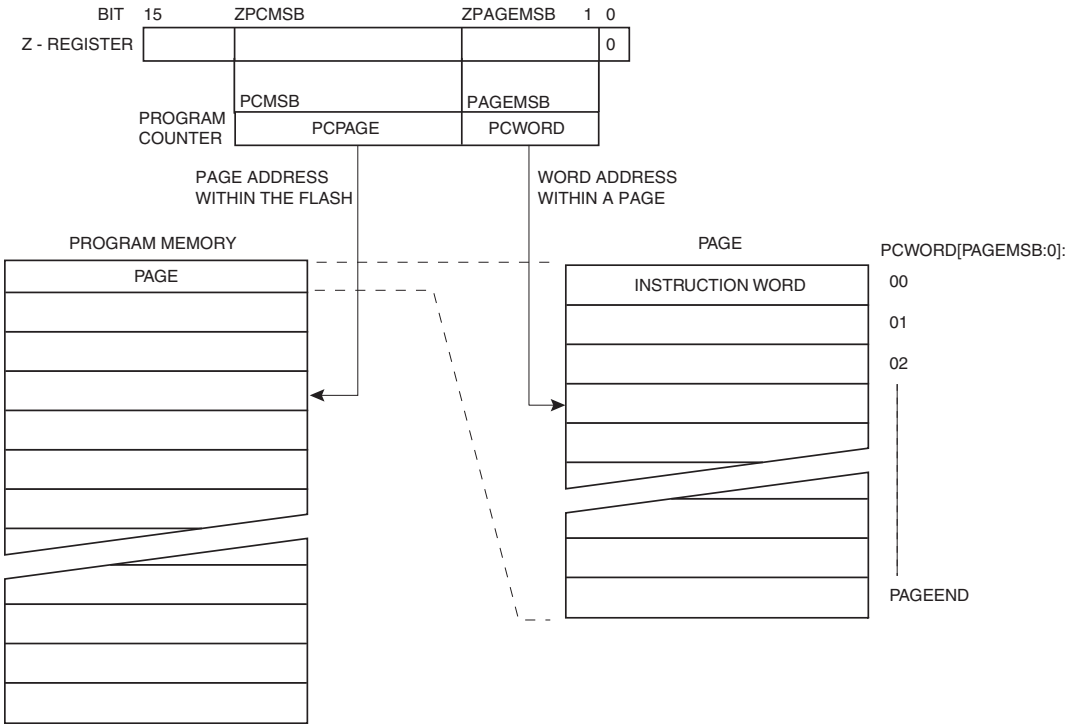

Note: 1. The variables used in Figure 16-1 are listed in Table 17-5 on page 105.

The LPM instruction uses the Z-pointer to store the address. Since this instruction addresses the Flash byte-by-byte, also the LSB (bit Z0) of the Z-pointer is used.

16.5 EEPROM Write Prevents Writing to SPMCSR

Note that an EEPROM write operation will block all software programming to Flash. Reading the fuses and lock bits from software will also be prevented during the EEPROM write operation. It is recommended that the user checks the status bit (EEPE) in the EECR Register and verifies that the bit is cleared before writing to the SPMCSR Register.

16.6 Reading Fuse and Lock Bits from Firmware

It is possible to read fuse and lock bits from software.

16.6.1 Reading Lock Bits from Firmware

Issuing an LPM instruction within three CPU cycles after RFLB and SELFPRGEN bits have been set in SPMCSR will return lock bit values in the destination register. The RFLB and SELFPRGEN bits automatically clear upon completion of reading the lock bits, or if no LPM instruction is executed within three CPU cycles, or if no SPM instruction is executed within four CPU cycles. When RFLB and SELFPRGEN are cleared, LPM functions normally.

To read the lock bits, follow the below procedure.

1. Load the Z-pointer with 0x0001.
2. Set RFLB and SELFPRGEN bits in SPMCSR.
3. Issuing an LPM instruction within three clock cycles will return lock bits in the destination register.

If successful, the contents of the destination register are as follows.

Bit	7	6	5	4	3	2	1	0
Rd	–	–	–	–	–	–	LB2	LB1

See section “Program And Data Memory Lock Bits” on page 103 for more information on lock bits.

16.6.2 Reading Fuse Bits from Firmware

The algorithm for reading fuse bytes is similar to the one described above for reading lock bits, only the addresses are different.

To read the Fuse Low Byte (FLB), follow the below procedure:

1. Load the Z-pointer with 0x0000.
2. Set RFLB and SELFPRGEN bits in SPMCSR.
3. Issuing an LPM instruction within three clock cycles will FLB in the destination register.

If successful, the contents of the destination register are as follows.

Bit	7	6	5	4	3	2	1	0
Rd	FLB7	FLB6	FLB5	FLB4	FLB3	FLB2	FLB1	FLB0

To read the Fuse High Byte (FHB), simply replace the address in the Z-pointer with 0x0003 and repeat the procedure above.

If successful, the contents of the destination register are as follows.

Bit	7	6	5	4	3	2	1	0
Rd	FHB7	FHB6	FHB5	FHB4	FHB3	FHB2	FHB1	FHB0

See sections "Program And Data Memory Lock Bits" on page 103 and "Fuse Bytes" on page 104 for more information on fuse and lock bits.

16.7 Preventing Flash Corruption

During periods of low V_{CC}, the Flash program can be corrupted because the supply voltage is too low for the CPU and the Flash to operate properly. These issues are the same as for board level systems using the Flash, and the same design solutions should be applied.

A Flash program corruption can be caused by two situations when the voltage is too low. First, a regular write sequence to the Flash requires a minimum voltage to operate correctly. Secondly, the CPU itself can execute instructions incorrectly, if the supply voltage for executing instructions is too low.

Flash corruption can easily be avoided by following these design recommendations (one is sufficient):

1. Keep the AVR RESET active (low) during periods of insufficient power supply voltage. This can be done by enabling the internal Brown-out Detector (BOD) if the operating voltage matches the detection level. If not, an external low V_{CC} reset protection circuit can be used. If a reset occurs while a write operation is in progress, the write operation will be completed provided that the power supply voltage is sufficient.
2. Keep the AVR core in Power-down sleep mode during periods of low V_{CC}. This will prevent the CPU from attempting to decode and execute instructions, effectively protecting the SPMCSR Register and thus the Flash from unintentional writes.

16.8 Programming Time for Flash when Using SPM

The calibrated RC Oscillator is used to time Flash accesses. Table 16-1 on page 101 shows the typical programming time for Flash accesses from the CPU.

Table 16-1. SPM Programming Time[1]

Symbol	Min Programming Time	Max Programming Time
Flash write (Page Erase, Page Write, and write lock bits by SPM)	3.7 ms	4.5 ms

Note: 1. The min and max programming times is per individual operation.

16.9 Register Description

16.9.1 SPMCSR – Store Program Memory Control and Status Register

The Store Program Memory Control and Status Register contains the control bits needed to control the Program memory operations.

Bit	7	6	5	4	3	2	1	0	
0x37	–	–	–	CTPB	RFLB	PGWRT	PGERS	SELFPRGEN	SPMCSR
Read/Write	R	R	R	R/W	R/W	R/W	R/W	R/W	
Initial Value	0	0	0	0	0	0	0	0	

- **Bits 7:5 – Res: Reserved Bits**

These bits are reserved bits in the ATtiny13A and always read as zero.

- **Bit 4 – CTPB: Clear Temporary Page Buffer**

If the CTPB bit is written while filling the temporary page buffer, the temporary page buffer will be cleared and the data will be lost.

- **Bit 3 – RFLB: Read Fuse and Lock Bits**

An LPM instruction within three cycles after RFLB and SELFPRGEN are set in the SPMCSR Register, will read either the lock bits or the fuse bits (depending on Z0 in the Z-pointer) into the destination register. See “EEPROM Write Prevents Writing to SPMCSR” on page 100 for details.

- **Bit 2 – PGWRT: Page Write**

If this bit is written to one at the same time as SELFPRGEN, the next SPM instruction within four clock cycles executes Page Write, with the data stored in the temporary buffer. The page address is taken from the high part of the Z-pointer. The data in R1 and R0 are ignored. The PGWRT bit will auto-clear upon completion of a Page Write, or if no SPM instruction is executed within four clock cycles. The CPU is halted during the entire Page Write operation.

- **Bit 1 – PGERS: Page Erase**

If this bit is written to one at the same time as SELFPRGEN, the next SPM instruction within four clock cycles executes Page Erase. The page address is taken from the high part of the Z-pointer. The data in R1 and R0 are ignored. The PGERS bit will auto-clear upon completion of a Page Erase, or if no SPM instruction is executed within four clock cycles. The CPU is halted during the entire Page Write operation.

- **Bit 0 – SELFPRGEN: Self Programming Enable**

This bit enables the SPM instruction for the next four clock cycles. If written to one together with either CTPB, RFLB, PGWRT, or PGERS, the following SPM instruction will have a special meaning, see description above. If only SELFPRGEN is written, the following SPM instruction will store the value in R1:R0 in the temporary page buffer addressed by the Z-pointer. The LSB of the Z-pointer is ignored. The SELFPRGEN bit will auto-clear upon completion of an SPM instruction, or if no SPM instruction is executed within four clock cycles. During Page Erase and Page Write, the SELFPRGEN bit remains high until the operation is completed.

Writing any other combination than “10001”, “01001”, “00101”, “00011” or “00001” in the lower five bits will have no effect.

17. Memory Programming

This section describes how ATtiny13A memories can be programmed.

17.1 Program And Data Memory Lock Bits

ATtiny13A provides two lock bits which can be left unprogrammed ("1") or can be programmed ("0") to obtain the additional security listed in Table 17-2 on page 103. The lock bits can be erased to "1" with the Chip Erase command, only.

Program memory can be read out via the debugWIRE interface when the DWEN fuse is programmed, even if the lock bits are set. Thus, when lock bit security is required, debugWIRE should always be disabled by clearing the DWEN fuse.

Table 17-1. Lock Bit Byte

Lock Bit Byte	Bit No	Description	Default Value [1]
	7	–	1 (unprogrammed)
	6	–	1 (unprogrammed)
	5	–	1 (unprogrammed)
	4	–	1 (unprogrammed)
	3	–	1 (unprogrammed)
	2	–	1 (unprogrammed)
LB2	1	Lock bit	1 (unprogrammed)
LB1	0	Lock bit	1 (unprogrammed)

Note: 1. "1" means unprogrammed, "0" means programmed

Table 17-2. Lock Bit Protection Modes

Memory Lock Bits [1] [2]			
LB Mode	LB2	LB1	Protection Type
1	1	1	No memory lock features enabled.
2	1	0	Further programming of the Flash and EEPROM is disabled in High-voltage and Serial Programming mode. Fuse bits are locked in both Serial and High-voltage Programming mode. debugWire is disabled.
3	0	0	Further programming and verification of the Flash and EEPROM is disabled in High-voltage and Serial Programming mode. Fuse bits are locked in both Serial and High-voltage Programming mode. debugWire is disabled.

Notes: 1. Program fuse bits before lock bits. See section "Fuse Bytes" on page 104.
2. "1" means unprogrammed, "0" means programmed

17.2 Fuse Bytes

The ATtiny13A has two fuse bytes. Table 17-3 on page 104 and Table 17-4 on page 104 describe briefly the functionality of all the fuses and how they are mapped into the fuse bytes. Note that the fuses are read as logical zero, “0”, if they are programmed.

Table 17-3. Fuse High Byte

Fuse Bit	Bit No	Description	Default Value
–	7	–	1 (unprogrammed)
–	6	–	1 (unprogrammed)
–	5	–	1 (unprogrammed)
SELFPRGEN(1)	4	Self Programming Enable	1 (unprogrammed)
DWEN(2)	3	debugWire Enable	1 (unprogrammed)
BODLEVEL1(3)	2	Brown-out Detector trigger level	1 (unprogrammed)
BODLEVEL0(3)	1	Brown-out Detector trigger level	1 (unprogrammed)
RSTDISBL(4)	0	External Reset disable	1 (unprogrammed)

Notes:
1. Enables SPM instruction. See “Self-Programming the Flash” on page 98.
2. DWEN must be unprogrammed when lock Bit security is required. See “Program And Data Memory Lock Bits” on page 103.
3. See Table 18-6 on page 120 for BODLEVEL fuse decoding.
4. See “Alternate Functions of Port B” on page 55 for description of RSTDISBL and DWEN fuses. When programming the RSTDISBL fuse, High-voltage Serial programming has to be used to change fuses to perform further programming.

Table 17-4. Fuse Low Byte

Fuse Bit	Bit No	Description	Default Value
SPIEN(1)	7	Enable Serial Programming and Data Downloading	0 (programmed) (SPI prog. enabled)
EESAVE	6	Preserve EEPROM memory through Chip Erase	1 (unprogrammed) (memory not preserved)
WDTON(2)	5	Watchdog Timer always on	1 (unprogrammed)
CKDIV8(3)	4	Divide clock by 8	0 (programmed)
SUT1(4)	3	Select start-up time	1 (unprogrammed)
SUT0(4)	2	Select start-up time	0 (programmed)
CKSEL1(5)	1	Select Clock source	1 (unprogrammed)
CKSEL0(5)	0	Select Clock source	0 (programmed)

Notes:
1. The SPIEN fuse is not accessible in SPI Programming mode.
2. Programming this fues will disable the Watchdog Timer Interrupt. See “Watchdog Timer” on page 38 for details.
3. See “System Clock Prescaler” on page 26 for details.
4. The default value of SUT[1:0] results in maximum start-up time for the default clock source. See Table 18-3 on page 119 for details.
5. The default setting of CKSEL[1:0] results in internal RC Oscillator @ 9.6 MHz. See Table 18-3 on page 119 for details.

Note that fuse bits are locked if Lock Bit 1 (LB1) is programmed. Program the fuse bits before programming the lock bits. The status of the fuse bits is not affected by Chip Erase.

Fuse bits can also be read by the device firmware. See section "Reading Fuse and Lock Bits from Firmware" on page 100.

17.2.1 Latching of Fuses

The fuse values are latched when the device enters programming mode and changes of the fuse values will have no effect until the part leaves Programming mode. This does not apply to the EESAVE fuse which will take effect once it is programmed. The fuses are also latched on Power-up in Normal mode.

17.3 Calibration Bytes

The signature area of the ATtiny13A contains two bytes of calibration data for the internal oscillator. The calibration data in the high byte of address 0x00 is for use with the oscillator set to 9.6 MHz operation. During reset, this byte is automatically written into the OSCCAL register to ensure correct frequency of the oscillator.

There is a separate calibration byte for the internal oscillator in 4.8 MHz mode of operation but this data is not loaded automatically. The hardware always loads the 9.6 MHz calibration data during reset. To use separate calibration data for the oscillator in 4.8 MHz mode the OSCCAL register must be updated by firmware. The calibration data for 4.8 MHz operation is located in the high byte at address 0x01 of the signature area.

17.4 Signature Bytes

All Atmel microcontrollers have a three-byte signature code which identifies the device. This code can be read in both serial and high-voltage programming mode, even when the device is locked. The three bytes reside in a separate address space.

For the ATtiny13A the signature bytes are:

- 0x000: 0x1E (indicates manufactured by Atmel).
- 0x001: 0x90 (indicates 1 KB Flash memory).
- 0x002: 0x07 (indicates ATtiny13A device when 0x001 is 0x90).

17.5 Page Size

Table 17-5. No. of Words in a Page and No. of Pages in the Flash

Flash Size	Page Size	PCWORD	No. of Pages	PCPAGE	PCMSB
512 words (1K byte)	16 words	PC[3:0]	32	PC[8:4]	8

Table 17-6. No. of Words in a Page and No. of Pages in the EEPROM

EEPROM Size	Page Size	PCWORD	No. of Pages	PCPAGE	EEAMSB
64 bytes	4 bytes	EEA[1:0]	16	EEA[5:2]	5

17.6 Serial Programming

Both the Flash and EEPROM memory arrays can be programmed using the serial SPI bus while $\overline{\text{RESET}}$ is pulled to GND. The serial interface consists of pins SCK, MOSI (input) and MISO (output). See Figure 17-1.

Figure 17-1. Serial Programming and Verify

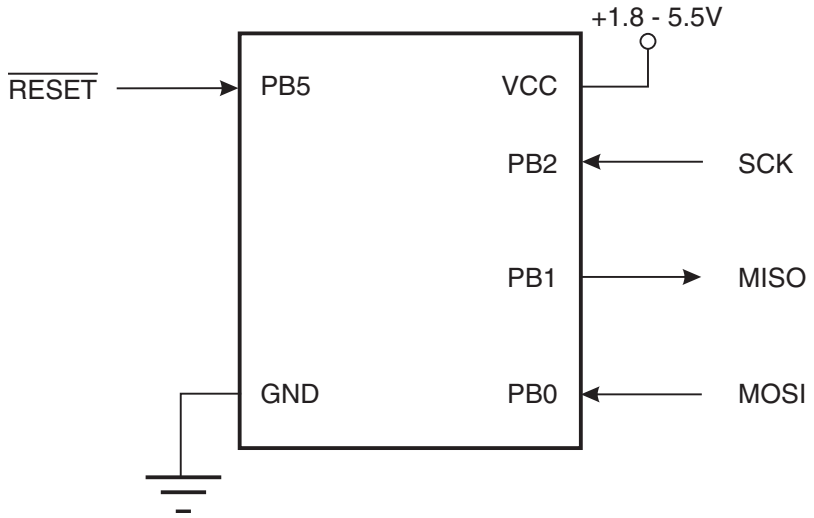

Note: If clocked by internal oscillator there is no need to connect a clock source to the CLKI pin.

After $\overline{\text{RESET}}$ is set low, the Programming Enable instruction needs to be executed first before program/erase operations can be executed.

Table 17-7. Pin Mapping Serial Programming

Symbol	Pins	I/O	Description
MOSI	PB0	I	Serial Data in
MISO	PB1	O	Serial Data out
SCK	PB2	I	Serial Clock

Note: In Table 17-7 above, the pin mapping for SPI programming is listed. Not all parts use the SPI pins dedicated for the internal SPI interface.

When programming the EEPROM, an auto-erase cycle is built into the self-timed programming operation (in the Serial mode ONLY) and there is no need to first execute the Chip Erase instruction. The Chip Erase operation turns the content of every memory location in both the Program and EEPROM arrays into 0xFF.

Depending on CKSEL fuses, a valid clock must be present. The minimum low and high periods for the serial clock (SCK) input are defined as follows:

Low: > 2 CPU clock cycles for f_{ck} < 12 MHz, 3 CPU clock cycles for f_{ck} >= 12 MHz

High: > 2 CPU clock cycles for f_{ck} < 12 MHz, 3 CPU clock cycles for f_{ck} >= 12 MHz

17.6.1 Serial Programming Algorithm

When writing serial data to the ATtiny13A, data is clocked on the rising edge of SCK.

When reading data from the ATtiny13A, data is clocked on the falling edge of SCK. See Figure 18-4 on page 122 and Figure 18-3 on page 122 for timing details.

To program and verify the ATtiny13A in the Serial Programming mode, the following sequence is recommended (see four byte instruction formats in Table 17-9 on page 108):

1. Power-up sequence:
   Apply power between V_{CC} and GND while $\overline{\text{RESET}}$ and SCK are set to “0”. In some systems, the programmer can not guarantee that SCK is held low during power-up. In this case, $\overline{\text{RESET}}$ must be given a positive pulse after SCK has been set to “0”. The pulse duration must be at least t_{RST} (miniumum pulse widht of $\overline{\text{RESET}}$ pin, see Table 18-4 on page 120 and Figure 19-58 on page 153) plus two CPU clock cycles.
2. Wait for at least 20 ms and enable serial programming by sending the Programming Enable serial instruction to pin MOSI.
3. The serial programming instructions will not work if the communication is out of synchronization. When in sync. the second byte (0x53), will echo back when issuing the third byte of the Programming Enable instruction. Whether the echo is correct or not, all four bytes of the instruction must be transmitted. If the 0x53 did not echo back, give $\overline{\text{RESET}}$ a positive pulse and issue a new Programming Enable command.
4. The Flash is programmed one page at a time. The memory page is loaded one byte at a time by supplying the 4 LSB of the address and data together with the Load Program memory Page instruction. To ensure correct loading of the page, the data low byte must be loaded before data high byte is applied for a given address. The Program memory Page is stored by loading the Write Program memory Page instruction with the 5 MSB of the address. If polling (RDY/$\overline{\text{BSY}}$) is not used, the user must wait at least t_{WD_FLASH} before issuing the next page. (See Table 17-8 on page 108.) Accessing the serial programming interface before the Flash write operation completes can result in incorrect programming.
5. **A:** The EEPROM array is programmed one byte at a time by supplying the address and data together with the appropriate Write instruction. An EEPROM memory location is first automatically erased before new data is written. If polling (RDY/$\overline{\text{BSY}}$) is not used, the user must wait at least t_{WD_EEPROM} before issuing the next byte. (See Table 17-8 on page 108.) In a chip erased device, no 0xFFs in the data file(s) need to be programmed.
   B: The EEPROM array is programmed one page at a time. The Memory page is loaded one byte at a time by supplying the 2 LSB of the address and data together with the Load EEPROM Memory Page instruction. The EEPROM Memory Page is stored by loading the Write EEPROM Memory Page Instruction with the 4 MSB of the address. When using EEPROM page access only byte locations loaded with the Load EEPROM Memory Page instruction is altered. The remaining locations remain unchanged. If polling (RDY/$\overline{\text{BSY}}$) is not used, the used must wait at least t_{WD_EEPROM} before issuing the next page (See Table 17-6 on page 105). In a chip erased device, no 0xFF in the data file(s) need to be programmed.
6. Any memory location can be verified by using the Read instruction which returns the content at the selected address at serial output MISO.
7. At the end of the programming session, $\overline{\text{RESET}}$ can be set high to commence normal operation.
8. Power-off sequence (if needed):
   Set $\overline{\text{RESET}}$ to “1”.
   Turn V_{CC} power off.

.

Table 17-8. Minimum Wait Delay Before Writing the Next Flash or EEPROM Location

Symbol	Minimum Wait Delay
t_{WD_FLASH}	4.5 ms
t_{WD_EEPROM}	4.0 ms
t_{WD_ERASE}	9.0 ms
t_{WD_FUSE}	4.5 ms

17.6.2 Serial Programming Instruction set

The instruction set is described in Table 17-9.

Table 17-9. Serial Programming Instruction Set

Instruction	Instruction Format				Operation
	Byte 1	Byte 2	Byte 3	Byte4	
Programming Enable	1010 1100	0101 0011	xxxx xxxx	xxxx xxxx	Enable Serial Programming after RESET goes low.
Chip Erase	1010 1100	100x xxxx	xxxx xxxx	xxxx xxxx	Chip Erase EEPROM and Flash.
Read Program Memory	0010 **H**000	0000 000**a**	**bbbb bbbb**	**oooo oooo**	Read **H** (high or low) data **o** from Program memory at word address **a:b**.
Load Program Memory Page	0100 **H**000	000x xxxx	xxxx **bbbb**	**iiii iiii**	Write **H** (high or low) data **i** to Program memory page at word address **b**. Data low byte must be loaded before Data high byte is applied within the same address.
Write Program Memory Page	0100 1100	0000 000**a**	**bbbb** xxxx	xxxx xxxx	Write Program memory Page at address **a:b**.
Read EEPROM Memory	1010 0000	000x xxxx	xx**bb bbbb**	**oooo oooo**	Read data **o** from EEPROM memory at address **b**.
Write EEPROM Memory	1100 0000	000x xxxx	xx**bb bbbb**	**iiii iiii**	Write data **i** to EEPROM memory at address **b**.
Load EEPROM Memory Page (page access)	1100 0001	0000 0000	0000 00**bb**	**iiii iiii**	Load data **i** to EEPROM memory page buffer. After data is loaded, program EEPROM page.
Write EEPROM Memory Page (page access)	1100 0010	00xx xxxx	xx**bb bb**00	xxxx xxxx	Write EEPROM page at address **b**.
Read Lock Bits	0101 1000	0000 0000	xxxx xxxx	xx**oo oooo**	Read lock bits. “0” = programmed, “1” = unprogrammed. See Table 17-1 on page 103 for details.
Write Lock Bits	1010 1100	111x xxxx	xxxx xxxx	11**ii iiii**	Write lock bits. Set bits = “0” to program lock bits. See Table 17-1 on page 103 for details.

Table 17-9. Serial Programming Instruction Set (Continued)

Instruction	Instruction Format				Operation
	Byte 1	Byte 2	Byte 3	Byte4	
Read Fuse Byte	0101 **H**000	0000 **H**000	xxxx xxxx	**oooo oooo**	Read fuse low/high byte. Bit “0” = programmed, “1” = unprogrammed. See “Fuse Bytes” on page 104 for details.
Write Fuse Byte	1010 1100	1010 **H**000	xxxx xxxx	**iiii iiii**	Set fuse low/high byte. Set bit to “0” to program, “1” to unprogram. See “Fuse Bytes” on page 104 for details.
Read Signature Byte	0011 0000	000x xxxx	xxxx xx**bb**	**oooo oooo**	Read Signature Byte **o** at address **b**.
Read Calibration Byte	0011 1000	000x xxxx	0000 000b	**oooo oooo**	Read Calibration Byte. See “Calibration Bytes” on page 105
Poll RDY/$\overline{\text{BSY}}$	1111 0000	0000 0000	xxxx xxxx	xxxx xxx**o**	If **o** = “1”, a programming operation is still busy. Wait until this bit returns to “0” before applying another command.

Note: **a** = address high bits, **b** = address low bits, **H** = 0 - Low byte, 1 - High Byte, **o** = data out, **i** = data in, x = don’t care

17.7 High-Voltage Serial Programming

This section describes how to program and verify Flash Program memory, EEPROM Data memory, lock bits and fuse bits in the ATtiny13A.

Figure 17-2. High-voltage Serial Programming

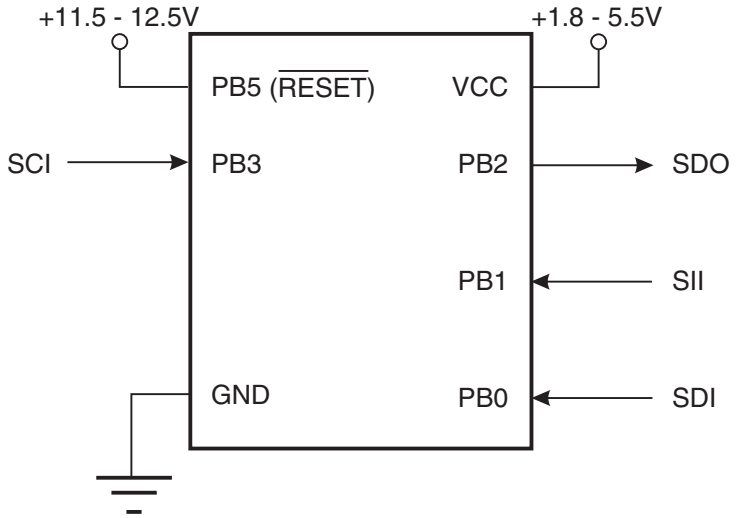

Table 17-10. Pin Name Mapping

Signal Name in High-voltage Serial Programming Mode	Pin Name	I/O	Function
SDI	PB0	I	Serial Data Input
SII	PB1	I	Serial Instruction Input
SDO	PB2	O	Serial Data Output
SCI	PB3	I	Serial Clock Input (min. 220ns period)

The minimum period for the Serial Clock Input (SCI) during High-voltage Serial Programming is 220 ns.

Table 17-11. Pin Values Used to Enter Programming Mode

Pin	Symbol	Value
SDI	Prog_enable[0]	0
SII	Prog_enable[1]	0
SDO	Prog_enable[2]	0

17.7.1 High-Voltage Serial Programming Algorithm

To program and verify the ATtiny13A in the High-voltage Serial Programming mode, the following sequence is recommended (See instruction formats in Table 17-13 on page 111):

The following algorithm puts the device in High-voltage Serial Programming mode:

1. Set Prog_enable pins listed in Table 17-11 to “000”, RESET pin to “0” and Vcc to 0V.
2. Apply 4.5 - 5.5V between VCC and GND. Ensure that Vcc reaches at least 1.8V within the next 20 µs.
3. Wait 20 - 60 µs, and apply 11.5 - 12.5V to RESET.
4. Keep the Prog_enable pins unchanged for at least 10µs after the High-voltage has been applied to ensure the Prog_enable Signature has been latched.
5. Release the Prog_enable[2] pin to avoid drive contention on the Prog_enable[2]/SDO pin.
6. Wait at least 300µs before giving any serial instructions on SDI/SII.
7. Exit Programming mode by power the device down or by bringing RESET pin to 0V.

If the rise time of the Vcc is unable to fulfill the requirements listed above, the following alternative algorithm can be used.

1. Set Prog_enable pins listed in Table 17-11 to “000”, RESET pin to “0” and Vcc to 0V.
2. Apply 4.5 - 5.5V between VCC and GND.
3. Monitor Vcc, and as soon as Vcc reaches 0.9 - 1.1V, apply 11.5 - 12.5V to RESET.
4. Keep the Prog_enable pins unchanged for at least 10µs after theHigh-voltage has been applied to ensure the Prog_enable Signature has been latched.
5. Release the Prog_enable[2] pin to avoid drive contention on the Prog_enable[2]/SDO pin.

6. Wait until Vcc actually reaches 4.5 - 5.5V before giving any serialinstructions on SDI/SII.
7. Exit Programming mode by power the device down or by bringing RESET pin to 0V.

Table 17-12. High-voltage Reset Characteristics

Supply Voltage	RESET Pin High-voltage Threshold	Minimum High-voltage Period for Latching Prog_enable
V_{CC}	V_{HVRST}	t_{HVRST}
4.5V	12V	100 ns
5.5V	12	100 ns

17.7.2 High-Voltage Serial Programming Instruction set

The instruction set is described in Table 17-13.

Table 17-13. High-Voltage Serial Programming Instruction Set for ATtiny13A

Instruction		Instruction Format				Operation Remarks
		Instr.1/5	Instr.2/6	Instr.3	Instr.4	
Chip Erase	SDI SII SDO	0_1000_0000_00 0_0100_1100_00 x_xxxx_xxxx_xx	0_0000_0000_00 0_0110_0100_00 x_xxxx_xxxx_xx	0_0000_0000_00 0_0110_1100_00 x_xxxx_xxxx_xx		Wait after Instr.3 until SDO goes high for the Chip Erase cycle to finish.
Load “Write Flash” Command	SDI SII SDO	0_0001_0000_00 0_0100_1100_00 x_xxxx_xxxx_xx				Enter Flash Programming code.
Load Flash Page Buffer	SDI SII SDO	0_ **bbbb_bbbb** _00 0_0000_1100_00 x_xxxx_xxxx_xx	0_**eeee_eeee**_00 0_0010_1100_00 x_xxxx_xxxx_xx	0_**dddd_dddd**_00 0_0011_1100_00 x_xxxx_xxxx_xx	0_0000_0000_00 0_0111_1101_00 x_xxxx_xxxx_xx	Repeat after Instr. 1 - 5 until the entire page buffer is filled or until all data within the page is filled. See Note 1.
	SDI SII SDO	0_0000_0000_00 0_0111_1100_00 x_xxxx_xxxx_xx				Instr 5.
Load Flash High Address and Program Page	SDI SII SDO	0_0000_000**a**_00 0_0001_1100_00 x_xxxx_xxxx_xx	0_0000_0000_00 0_0110_0100_00 x_xxxx_xxxx_xx	0_0000_0000_00 0_0110_1100_00 x_xxxx_xxxx_xx		Wait after Instr 3 until SDO goes high. Repeat Instr. 2 - 3 for each loaded Flash Page until the entire Flash or all data is programmed. Repeat Instr. 1 for a new 256 byte page. See Note 1.
Load “Read Flash” Command	SDI SII SDO	0_0000_0010_00 0_0100_1100_00 x_xxxx_xxxx_xx				Enter Flash Read mode.
Read Flash Low and High Bytes	SDI SII SDO	0_**bbbb_bbbb**_00 0_0000_1100_00 x_xxxx_xxxx_xx	0_0000_000**a**_00 0_0001_1100_00 x_xxxx_xxxx_xx	0_0000_0000_00 0_0110_1000_00 x_xxxx_xxxx_xx	0_0000_0000_00 0_0110_1100_00 **q_qqqq_qqq**x_xx	Repeat Instr. 1, 3 - 6 for each new address. Repeat Instr. 2 for a new 256 byte page.
	SDI SII SDO	0_0000_0000_00 0_0111_1000_00 x_xxxx_xxxx_xx	0_0000_0000_00 0_0111_1100_00 **p_pppp_ppp**x_xx			Instr 5 - 6.
Load “Write EEPROM” Command	SDI SII SDO	0_0001_0001_00 0_0100_1100_00 x_xxxx_xxxx_xx				Enter EEPROM Programming mode.

Table 17-13. High-Voltage Serial Programming Instruction Set for ATtiny13A (Continued)

Instruction		Instruction Format				Operation Remarks
		Instr.1/5	Instr.2/6	Instr.3	Instr.4	
Load EEPROM Page Buffer	SDI SII SDO	0_00**bb_bbbb**_00 0_0000_1100_00 x_xxxx_xxxx_xx	0_**eeee_eeee**_00 0_0010_1100_00 x_xxxx_xxxx_xx	0_0000_0000_00 0_0110_1101_00 x_xxxx_xxxx_xx	0_0000_0000_00 0_0110_1100_00 x_xxxx_xxxx_xx	Repeat Instr. 1 - 4 until the entire page buffer is filled or until all data within the page is filled. See Note 2.
Program EEPROM Page	SDI SII SDO	0_0000_0000_00 0_0110_0100_00 x_xxxx_xxxx_xx	0_0000_0000_00 0_0110_1100_00 x_xxxx_xxxx_xx			Wait after Instr. 2 until SDO goes high. Repeat Instr. 1 - 2 for each loaded EEPROM page until the entire EEPROM or all data is programmed.
Write EEPROM Byte	SDI SII SDO	0_00**bb_bbbb**_00 0_0000_1100_00 x_xxxx_xxxx_xx	0_**eeee_eeee**_00 0_0010_1100_00 x_xxxx_xxxx_xx	0_0000_0000_00 0_0110_1101_00 x_xxxx_xxxx_xx	0_0000_0000_00 0_0110_0100_00 x_xxxx_xxxx_xx	Repeat Instr. 1 - 5 for each new address. Wait after Instr. 5 until SDO goes high. See Note 3.
	SDI SII SDO	0_0000_0000_00 0_0110_1100_00 x_xxxx_xxxx_xx				Instr. 5
Load “Read EEPROM” Command	SDI SII SDO	0_0000_0011_00 0_0100_1100_00 x_xxxx_xxxx_xx				Enter EEPROM Read mode.
Read EEPROM Byte	SDI SII SDO	0_**bbbb_bbbb**_00 0_0000_1100_00 x_xxxx_xxxx_xx	0_**aaaa_aaaa**_00 0_0001_1100_00 x_xxxx_xxxx_xx	0_0000_0000_00 0_0110_1000_00 x_xxxx_xxxx_xx	0_0000_0000_00 0_0110_1100_00 **q_qqqq_qqq**0_00	Repeat Instr. 1, 3 - 4 for each new address. Repeat Instr. 2 for a new 256 byte page.
Write Fuse Low Bits	SDI SII SDO	0_0100_0000_00 0_0100_1100_00 x_xxxx_xxxx_xx	0_**A987_6543**_00 0_0010_1100_00 x_xxxx_xxxx_xx	0_0000_0000_00 0_0110_0100_00 x_xxxx_xxxx_xx	0_0000_0000_00 0_0110_1100_00 x_xxxx_xxxx_xx	Wait after Instr. 4 until SDO goes high. Write **A - 3** = “0” to program the Fuse bit.
Write Fuse High Bits	SDI SII SDO	0_0100_0000_00 0_0100_1100_00 x_xxxx_xxxx_xx	0_000**F_EDCB**_00 0_0010_1100_00 x_xxxx_xxxx_xx	0_0000_0000_00 0_0111_0100_00 x_xxxx_xxxx_xx	0_0000_0000_00 0_0111_1100_00 x_xxxx_xxxx_xx	Wait after Instr. 4 until SDO goes high. Write **F - B** = “0” to program the Fuse bit.
Write Lock Bits	SDI SII SDO	0_0010_0000_00 0_0100_1100_00 x_xxxx_xxxx_xx	0_0000_00**21**_00 0_0010_1100_00 x_xxxx_xxxx_xx	0_0000_0000_00 0_0110_0100_00 x_xxxx_xxxx_xx	0_0000_0000_00 0_0110_1100_00 x_xxxx_xxxx_xx	Wait after Instr. 4 until SDO goes high. Write **2 - 1** = “0” to program the Lock Bit.
Read Fuse Low Bits	SDI SII SDO	0_0000_0100_00 0_0100_1100_00 x_xxxx_xxxx_xx	0_0000_0000_00 0_0110_1000_00 x_xxxx_xxxx_xx	0_0000_0000_00 0_0110_1100_00 **A_9876_543**x_xx		Reading **A - 3** = “0” means the Fuse bit is programmed.
Read Fuse High Bits	SDI SII SDO	0_0000_0100_00 0_0100_1100_00 x_xxxx_xxxx_xx	0_0000_0000_00 0_0111_1010_00 x_xxxx_xxxx_xx	0_0000_0000_00 0_0111_1110_00 x_xx**FE_DCB**x_xx		Reading **F - B** = “0” means the fuse bit is programmed.
Read Lock Bits	SDI SII SDO	0_0000_0100_00 0_0100_1100_00 x_xxxx_xxxx_xx	0_0000_0000_00 0_0111_1000_00 x_xxxx_xxxx_xx	0_0000_0000_00 0_0111_1100_00 x_xxxx_x**21**x_xx		Reading **2, 1** = “0” means the lock bit is programmed.

Table 17-13. High-Voltage Serial Programming Instruction Set for ATtiny13A (Continued)

Instruction		Instruction Format				Operation Remarks
		Instr.1/5	Instr.2/6	Instr.3	Instr.4	
Read Signature Bytes	SDI SII SDO	0_0000_1000_00 0_0100_1100_00 x_xxxx_xxxx_xx	0_0000_00**bb**_00 0_0000_1100_00 x_xxxx_xxxx_xx	0_0000_0000_00 0_0110_1000_00 x_xxxx_xxxx_xx	0_0000_0000_00 0_0110_1100_00 **q_qqqq_qqq**x_xx	Repeats Instr 2 4 for each signature byte address.
Read Calibration Byte	SDI SII SDO	0_0000_1000_00 0_0100_1100_00 x_xxxx_xxxx_xx	0_0000_000b_00 0_0000_1100_00 x_xxxx_xxxx_xx	0_0000_0000_00 0_0111_1000_00 x_xxxx_xxxx_xx	0_0000_0000_00 0_0111_1100_00 **p_pppp_ppp**x_xx	
Load “No Operation” Command	SDI SII SDO	0_0000_0000_00 0_0100_1100_00 x_xxxx_xxxx_xx				

Note: **a** = address high bits, **b** = address low bits, **d** = data in high bits, **e** = data in low bits, **p** = data out high bits, **q** = data out low bits, x = don’t care, ***1*** = Lock Bit1, ***2*** = Lock Bit2, **3** = CKSEL0 fuse, **4** = CKSEL1 fuse, **5** = SUT0 fuse, **6** = SUT1 fuse, **7** = CKDIV8, fuse, **8** = WDTON fuse, **9** = EESAVE fuse, **A** = SPIEN fuse, **B** = RSTDISBL fuse, **C** = BODLEVEL0 fuse, **D**= BODLEVEL1 fuse, **E** = MONEN fuse, **F** = SELFPRGEN fuse

Note: The EEPROM is written page-wise. But only the bytes that are loaded into the page are actually written to the EEPROM. Page-wise EEPROM access is more efficient when multiple bytes are to be written to the same page. Note that auto-erase of EEPROM is not available in High-voltage Serial Programming, only in SPI Programming.

17.8 Considerations for Efficient Programming

The loaded command and address are retained in the device during programming. For efficient programming, the following should be considered.

- The command needs only be loaded once when writing or reading multiple memory locations.
- Skip writing the data value 0xFF that is the contents of the entire EEPROM (unless the EESAVE fuse is programmed) and Flash after a Chip Erase.
- Address High byte needs only be loaded before programming or reading a new 256 word window in Flash or 256 byte EEPROM. This consideration also applies to Signature bytes reading.

17.8.1 Chip Erase

The Chip Erase will erase the Flash and EEPROM[(1)] memories plus lock bits. The lock bits are not reset until the Program memory has been completely erased. The fuse bits are not changed. A Chip Erase must be performed before the Flash and/or EEPROM are re-programmed.

1. Load command “Chip Erase” (see Table 17-13 on page 111).
2. Wait after Instr. 3 until SDO goes high for the “Chip Erase” cycle to finish.
3. Load Command “No Operation”.

Note: 1. The EEPROM memory is preserved during Chip Erase if the EESAVE fuse is programmed.

17.8.2 Programming the Flash

The Flash is organized in pages, see Table 17-9 on page 108. When programming the Flash, the program data is latched into a page buffer. This allows one page of program data to be programmed simultaneously. The following procedure describes how to program the entire Flash memory:

1. Load Command “Write Flash” (see Table 17-13 on page 111).
2. Load Flash Page Buffer.
3. Load Flash High Address and Program Page. Wait after Instr. 3 until SDO goes high for the “Page Programming” cycle to finish.
4. Repeat 2 through 3 until the entire Flash is programmed or until all data has been programmed.
5. End Page Programming by Loading Command “No Operation”.

When writing or reading serial data to the ATtiny13A, data is clocked on the rising edge of the serial clock, see Figure 17-4 on page 115, Figure 18-5 on page 123 and Table 18-10 on page 123 for details.

Figure 17-3. Addressing the Flash which is Organized in Pages

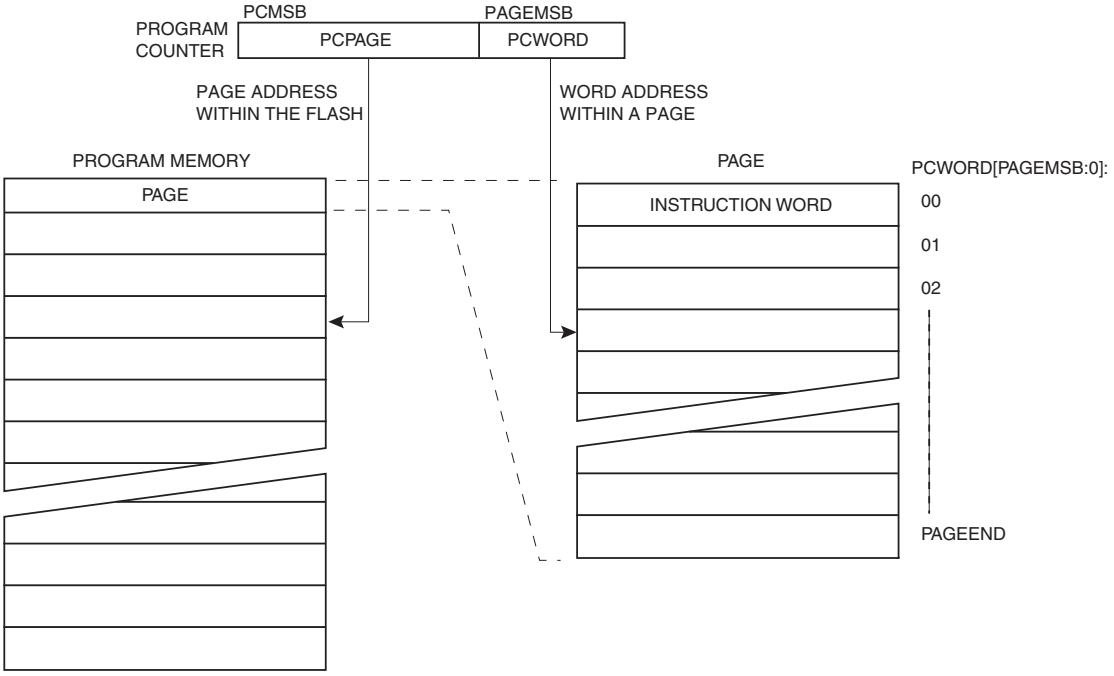

Figure 17-4. High-voltage Serial Programming Waveforms

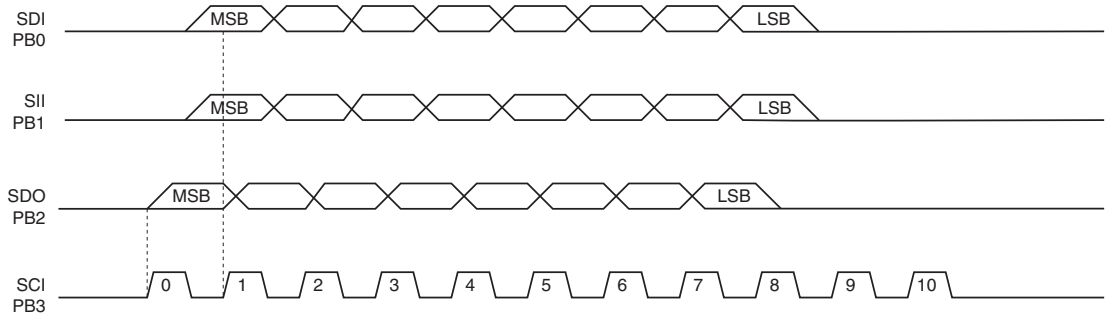

17.8.3 Programming the EEPROM

The EEPROM is organized in pages, see Table 18-9 on page 122. When programming the EEPROM, the data is latched into a page buffer. This allows one page of data to be programmed simultaneously. The programming algorithm for the EEPROM Data memory is as follows (refer to Table 17-13 on page 111):

1. Load Command “Write EEPROM”.
2. Load EEPROM Page Buffer.
3. Program EEPROM Page. Wait after Instr. 2 until SDO goes high for the “Page Programming” cycle to finish.
4. Repeat 2 through 3 until the entire EEPROM is programmed or until all data has been programmed.
5. End Page Programming by Loading Command “No Operation”.

17.8.4 Reading the Flash

The algorithm for reading the Flash memory is as follows (refer to Table 17-13 on page 111):

1. Load Command "Read Flash".
2. Read Flash Low and High Bytes. The contents at the selected address are available at serial output SDO.

17.8.5 Reading the EEPROM

The algorithm for reading the EEPROM memory is as follows (refer to Table 17-13 on page 111):

1. Load Command “Read EEPROM”.
2. Read EEPROM Byte. The contents at the selected address are available at serial output SDO.

17.8.6 Programming and Reading the Fuse and Lock Bits

The algorithms for programming and reading the fuse low/high bits and lock bits are shown in Table 17-13 on page 111.

17.8.7 Reading the Signature Bytes and Calibration Byte

The algorithms for reading the Signature bytes and Calibration byte are shown in Table 17-13 on page 111.

17.8.8 Power-off sequence

Set SCI to “0”. Set RESET to “1”. Turn V_{CC} power off.

18. Electrical Characteristics

18.1 Absolute Maximum Ratings*

Operating Temperature..... -55°C to +125°C

Storage Temperature ..... -65°C to +150°C

Voltage on any Pin except $\overline{\text{RESET}}$ with respect to Ground .....-0.5V to V_{CC}+0.5V

Voltage on $\overline{\text{RESET}}$ with respect to Ground.....-0.5V to +13.0V

Maximum Operating Voltage 6.0V

DC Current per I/O Pin ..... 40.0 mA

DC Current V_{CC} and GND Pins ..... 200.0 mA

*NOTICE: Stresses beyond those listed under “Absolute Maximum Ratings” may cause permanent damage to the device. This is a stress rating only and functional operation of the device at these or other conditions beyond those indicated in the operational sections of this specification is not implied. Exposure to absolute maximum rating conditions for extended periods may affect device reliability.

18.2 DC Characteristics

Table 18-1. DC Characteristics, T_A = -40°C to +85°C

Symbol	Parameter	Condition	Min	Typ[1]	Max	Units
V_{IL}	Input Low Voltage, Any Pin as I/O	V_{CC} = 1.8 - 2.4V	-0.5		0.2V_{CC}[2]	V
		V_{CC} = 2.4 - 5.5V	-0.5		0.3V_{CC}[2]	V
	Input Low Voltage, $\overline{\text{RESET}}$ Pin as Reset [4]	V_{CC} = 1.8 - 5.5	-0.5		0.2V_{CC}[2]	V
V_{IH}	Input High Voltage, Any Pin as I/O	V_{CC} = 1.8 - 2.4V	0.7V_{CC}[3]		V_{CC} + 0.5	V
		V_{CC} = 2.4 - 5.5V	0.6V_{CC}[3]		V_{CC} + 0.5	V
	Input High Voltage, $\overline{\text{RESET}}$ Pin as Reset [4]	V_{CC} = 1.8 - 5.5V	0.9V_{CC}[3]		V_{CC} + 0.5	V
V_{OL}	Output Low Voltage, Pins PB0 and PB1 [5]	I_{OL} = 20 mA, V_{CC} = 5V			0.8	V
		I_{OL} = 10 mA, V_{CC} = 3V			0.6	V
	Output Low Voltage, Pins PB2, PB3 and PB4 [5]	I_{OL} = 10 mA, V_{CC} = 5V			0.8	V
		I_{OL} = 5 mA, V_{CC} = 3V			0.6	V
V_{OH}	Output High Voltage, Pins PB0 and PB1 [6]	I_{OH} = -20 mA, V_{CC} = 5V	4.0			V
		I_{OH} = -10 mA, V_{CC} = 3V	2.3			V
	Output High Voltage, Pins PB2, PB3 and PB4 [6]	I_{OH} = -10 mA, V_{CC} = 5V	4.2			V
		I_{OH} = -5 mA, V_{CC} = 3V	2.5			V
I_{LIL}	Input Leakage Current I/O Pin	V_{CC} = 5.5V, pin low	-1		1	µA
I_{LIH}	Input Leakage Current I/O Pin	V_{CC} = 5.5V, pin high	-1		1	µA
R_{PU}	Pull-Up Resistor, I/O Pin	V_{CC} = 5.5V, input low	20		50	kΩ
	Pull-Up Resistor, Reset Pin	V_{CC} = 5.5V, input low	30		80	kΩ

Table 18-1. DC Characteristics, T_A = -40°C to +85°C (Continued)

Symbol	Parameter	Condition	Min	Typ[1]	Max	Units
I_{CC}	Supply Current, Active Mode [7]	f = 1MHz, V_{CC} = 2V		0.2	0.35	mA
		f = 4MHz, V_{CC} = 3V		1.2	1.8	mA
		f = 8MHz, V_{CC} = 5V		3.6	6	mA
	Supply Current, Idle Mode [7]	f = 1MHz, V_{CC} = 2V		0.03	0.2	mA
		f = 4MHz, V_{CC} = 3V		0.2	1	mA
		f = 8MHz, V_{CC} = 5V		0.7	3	mA
	Supply Current, Power-Down Mode [8]	WDT enabled, V_{CC} = 3V		3.9	10	µA
		WDT disabled, V_{CC} = 3V		0.15	2	µA

Notes:
1. Typical values at +25°C.
2. “Max” means the highest value where the pin is guaranteed to be read as low.
3. “Min” means the lowest value where the pin is guaranteed to be read as high.
4. Not tested in production.
5. Although each I/O port can under non-transient, steady state conditions sink more than the test conditions, the sum of all I_{OL} (for all ports) should not exceed 60 mA. If I_{OL} exceeds the test condition, V_{OL} may exceed the related specification. Pins are not guaranteed to sink current greater than the listed test condition.
6. Although each I/O port can under non-transient, steady state conditions source more than the test conditions, the sum of all I_{OH} (for all ports) should not exceed 60 mA. If I_{OH} exceeds the test condition, V_{OH} may exceed the related specification. Pins are not guaranteed to source current greater than the listed test condition.
7. Values are with external clock using methods described in “Minimizing Power Consumption” on page 32. Power Reduction is enabled (PRR = 0xFF) and there is no I/O drive.
8. BOD Disabled.

18.3 Speed

The maximum operating frequency of the device depends on supply voltage, $V_{CC.}$ As shown in Figure 18-1, the relationship between maximum frequency and V_{CC} is linear in the range of 1.8V to 4.5V.

Figure 18-1. Maximum Frequency vs. V_{CC}

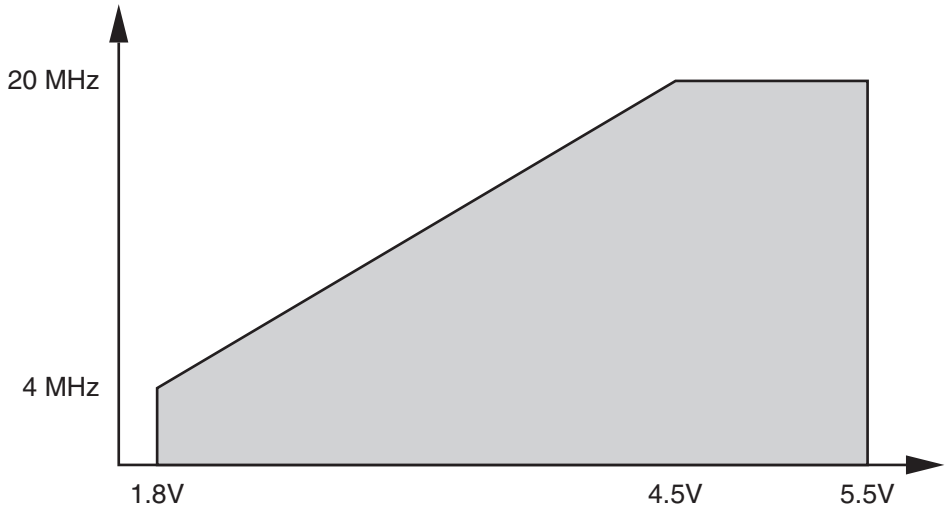

18.4 Clock Characteristics

18.4.1 Calibrated Internal RC Oscillator Accuracy

It is possible to manually calibrate the internal oscillator to be more accurate than default factory calibration. Note that the oscillator frequency depends on temperature and voltage. Voltage and temperature characteristics can be found in Figure 19-59 on page 154, Figure 19-60 on page 154, Figure 19-61 on page 155, Figure 19-62 on page 155, Figure 19-63 on page 156, and Figure 19-64 on page 156.

Table 18-2. Calibration Accuracy of Internal RC Oscillator

Calibration Method	Target Frequency	V_{CC}	Temperature	Accuracy at given Voltage & Temperature[1]
Factory Calibration	4.8 / 9.6 MHz	3V	25°C	±10%
User Calibration	Fixed frequency within: 4 – 5 MHz / 8 – 10 MHz	Fixed voltage within: 1.8 – 5.5V	Fixed temperature within: -40°C to +85°C	±2%

Notes: 1. Accuracy of oscillator frequency at calibration point (fixed temperature and fixed voltage).

18.4.2 External Clock Drive

Figure 18-2. External Clock Drive Waveform

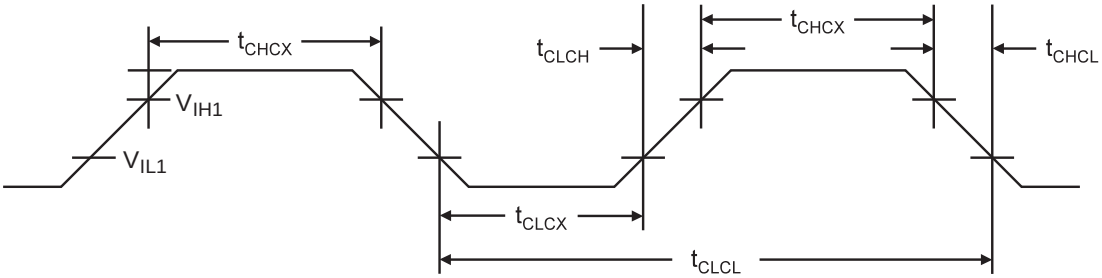

Table 18-3. External Clock Drive

Symbol	Parameter	V_{CC} = 1.8 - 5.5V		V_{CC} = 2.7 - 5.5V		V_{CC} = 4.5 - 5.5V		Units
		Min.	Max.	Min.	Max.	Min.	Max.	
$1/t_{CLCL}$	Clock Frequency	0	4	0	10	0	20	MHz
t_{CLCL}	Clock Period	250		100		50		ns
t_{CHCX}	High Time	100		40		20		ns
t_{CLCX}	Low Time	100		40		20		ns
t_{CLCH}	Rise Time		2.0		1.6		0.5	µs
t_{CHCL}	Fall Time		2.0		1.6		0.5	µs
Δt_{CLCL}	Change in period from one clock cycle to the next		2		2		2	%

18.5 System and Reset Characteristics

Table 18-4. Reset, Brown-out, and Internal Voltage Characteristics

Symbol	Parameter	Condition	Min	Typ	Max	Units
V_{RST}	$\overline{\text{RESET}}$ Pin Threshold Voltage		0.2 V_{CC}		0.9V_{CC}	V
t_{RST}	Minimum pulse width on $\overline{\text{RESET}}$ Pin [(1)]	V_{CC} = 1.8V V_{CC} = 3V V_{CC} = 5V		2000 700 400	2500 2500 2500	ns
V_{HYST}	Brown-out Detector Hysteresis [(2)]			50		mV
t_{BOD}	Min Pulse Width on Brown-out Reset [(2)]			2		µs
V_{BG}	Internal bandgap reference voltage	V_{CC} = 5V T_A = 25°C	1.0	1.1	1.2	V
t_{BG}	Internal bandgap reference start-up time [(2)]	V_{CC} = 5V T_A = 25°C		40	70	µs
I_{BG}	Internal bandgap reference current consumption [(2)]	V_{CC} = 5V T_A = 25°C		15		µA

Note: 1. When $\overline{\text{RESET}}$ pin used as reset (not as I/O).
2. Not tested in production.

18.5.1 Enhanced Power-On Reset

Table 18-5. Characteristics of Enhanced Power-On Reset. T_A = -40 to +85°C

Symbol	Parameter	Min[(1)]	Typ[(1)]	Max[(1)]	Units
V_{POR}	Release threshold of power-on reset [(2)]	1.1	1.4	1.6	V
V_{POA}	Activation threshold of power-on reset [(3)]	0.6	1.3	1.6	V
SR_{ON}	Power-On Slope Rate	0.01			V/ms

Note: 1. Values are guidelines only.
2. Threshold where device is released from reset when voltage is rising.
3. The Power-on Reset will not work unless the supply voltage has been below V_{POA}.

18.5.2 Brown-Out Detection

Table 18-6. V_{BOT} vs. BODLEVEL Fuse Coding

BODLEVEL[1:0] Fuses	Min[(1)]	Typ[(1)]	Max[(1)]	Units
11	BOD Disabled			
10	1.7	1.8	2.0	V
01	2.5	2.7	2.9	
00	4.1	4.3	4.5	

Note: 1. V_{BOT} may be below nominal minimum operating voltage for some devices. For devices where this is the case, the device is tested down to V_{CC} = V_{BOT} during the production test. This guarantees that a Brown-out Reset will occur before V_{CC} drops to a voltage where correct operation of the microcontroller is no longer guaranteed.

18.6 Analog Comparator Characteristics

Table 18-7. Analog Comparator Characteristics, T_A = -40°C to +85°C

Symbol	Parameter	Condition	Min	Typ	Max	Units
V_{AIO}	Input Offset Voltage	V_{CC} = 5V, V_{IN} = V_{CC} / 2		< 10	40	mV
I_{LAC}	Input Leakage Current	V_{CC} = 5V, V_{IN} = V_{CC} / 2	-50		50	nA
t_{APD}	Analog Propagation Delay (from saturation to slight overdrive)	V_{CC} = 2.7V		750		ns
		V_{CC} = 4.0V		500		
	Analog Propagation Delay (large step change)	V_{CC} = 2.7V		100		
		V_{CC} = 4.0V		75		
t_{DPD}	Digital Propagation Delay	V_{CC} = 1.8 - 5.5V		1	2	CLK

Note: All parameters are based on simulation results.

18.7 ADC Characteristics

Table 18-8. ADC Characteristics, Single Ended Channels. T_A = -40°C to +85°C

Symbol	Parameter	Condition	Min	Typ	Max	Units
	Resolution				10	Bits
	Absolute accuracy (Including INL, DNL, and Quantization, Gain and Offset Errors)	V_{REF} = 4V, V_{CC} = 4V, ADC clock = 200 kHz		3		LSB
		V_{REF} = 4V, V_{CC} = 4V, ADC clock = 1 MHz		4		LSB
		V_{REF} = 4V, V_{CC} = 4V, ADC clock = 200 kHz, Noise Reduction Mode		2.5		LSB
		V_{REF} = 4V, V_{CC} = 4V, ADC clock = 1 MHz, Noise Reduction Mode		3.5		LSB
	Integral Non-Linearity (INL) (Accuracy after Offset and Gain Calibration)	V_{REF} = 4V, V_{CC} = 4V, ADC clock = 200 kHz		1		LSB
	Differential Non-linearity (DNL)	V_{REF} = 4V, V_{CC} = 4V, ADC clock = 200 kHz		0.5		LSB
	Gain Error	V_{REF} = 4V, V_{CC} = 4V, ADC clock = 200 kHz		3.5		LSB
	Offset Error	V_{REF} = 4V, V_{CC} = 4V, ADC clock = 200 kHz		2.5		LSB
	Conversion Time	Free Running Conversion	13		260	µs
	Clock Frequency		50		1000	kHz
V_{IN}	Input Voltage		GND		V_{REF}	V
	Input Bandwidth			38.5		kHz
V_{INT}	Internal Voltage Reference		1.0	1.1	1.2	V
R_{AIN}	Analog Input Resistance			100		MΩ

18.8 Serial Programming Characteristics

Figure 18-3. Serial Programming Timing

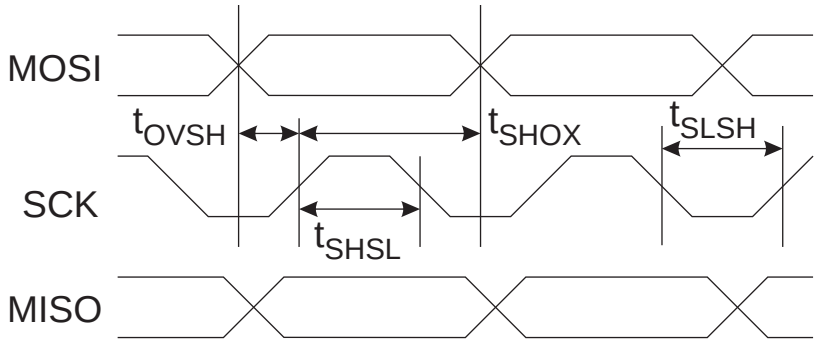

Figure 18-4. Serial Programming Waveform

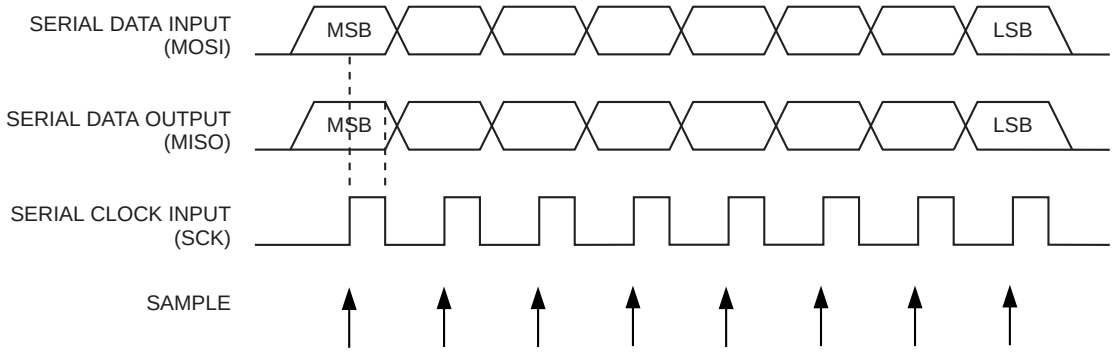

Table 18-9. Serial Programming Characteristics, T_A = -40°C to +85°C

Symbol	Parameter	Condition	Min	Typ	Max	Units
$1/t_{CLCL}$	Oscillator Frequency	V_{CC} = 1.8 – 5.5V	0		1	MHz
t_{CLCL}	Oscillator Period		1000			ns
$1/t_{CLCL}$	Oscillator Frequency	V_{CC} = 2.7 – 5.5V	0		9.6	MHz
t_{CLCL}	Oscillator Period		104			ns
$1/t_{CLCL}$	Oscillator Frequency	V_{CC} = 4.5 – 5.5V	0		20	MHz
t_{CLCL}	Oscillator Period		50			ns
t_{SHSL}	SCK Pulse Width High	V_{CC} = 1.8 – 5.5V	2 t_{CLCL} (1)			ns
t_{SLSH}	SCK Pulse Width Low		2 t_{CLCL} (1)			ns
t_{OVSH}	MOSI Setup to SCK High		t_{CLCL}			ns
t_{SHOX}	MOSI Hold after SCK High		2 t_{CLCL}			ns

Note: 1. 2 t_{CLCL} for f_{ck} < 12 MHz, 3 t_{CLCL} for f_{ck} >= 12 MHz

18.9 High-voltage Serial Programming Characteristics

Figure 18-5. High-voltage Serial Programming Timing

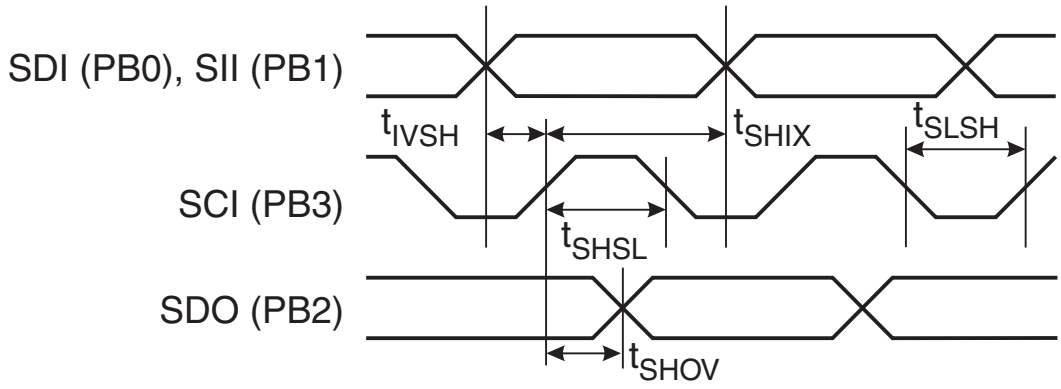

Table 18-10. High-voltage Serial Programming Characteristics
T_A = 25°C, V_{CC} = 5.0V ± 10% (Unless otherwise noted)

Symbol	Parameter	Min	Typ	Max	Units
t_{SHSL}	SCI (PB3) Pulse Width High	110			ns
t_{SLSH}	SCI (PB3) Pulse Width Low	110			ns
t_{IVSH}	SDI (PB0), SII (PB1) Valid to SCI (PB3) High	50			ns
t_{SHIX}	SDI (PB0), SII (PB1) Hold after SCI (PB3) High	50			ns
t_{SHOV}	SCI (PB3) High to SDO (PB2) Valid		16		ns
t_{WLWH_PFB}	Wait after Instr. 3 for Write Fuse Bits		2.5		ms

19. Typical Characteristics

The data contained in this section is largely based on simulations and characterization of similar devices in the same process and design methods. Thus, the data should be treated as indications of how the part will behave.

The following charts show typical behavior. These figures are not tested during manufacturing. During characterisation devices are operated at frequencies higher than test limits but they are not guaranteed to function properly at frequencies higher than the ordering code indicates.

All current consumption measurements are performed with all I/O pins configured as inputs and with internal pull-ups enabled. Current consumption is a function of several factors such as operating voltage, operating frequency, loading of I/O pins, switching rate of I/O pins, code executed and ambient temperature. The dominating factors are operating voltage and frequency.

A sine wave generator with rail-to-rail output is used as clock source but current consumption in Power-Down mode is independent of clock selection. The difference between current consumption in Power-Down mode with Watchdog Timer enabled and Power-Down mode with Watchdog Timer disabled represents the differential current drawn by the Watchdog Timer.

The current drawn from pins with a capacitive load may be estimated (for one pin) as follows:

$I_{CP} \approx V_{CC} \times C_L \times f_{SW}$

where V_{CC} = operating voltage, C_L = load capacitance and f_{SW} = average switching frequency of I/O pin.

19.1 Supply Current of I/O Modules

Using Table 19-1, the typical characteristics of this section and the equation given one can calculate the additional current consumption for peripheral modules in active and idle mode. Peripheral modules are enabled and disabled via control bits in the Power Reduction Register. See “Power Reduction Register” on page 31 for details.

Table 19-1. Additional Current Consumption (Absolute) for Peripherals

PRR bit	Typical numbers		
	V_{CC} = 2V, f = 1MHz	V_{CC} = 3V, f = 4MHz	V_{CC} = 5V, f = 8MHz
PRTIM0	4 µA	25 µA	115 µA
PRADC	180 µA	260 µA	460 µA

19.1.1 Example

Estimate current consumption in idle mode, with Timer/Counter0 and ADC enabled, the device running at 2V and with 1MHz external clock.

From Figure 19-7 on page 128 we find idle supply current I_{CC} = 0.03 mA. Using Figure 19-18 on page 133 we find ADC supply current I_{ADC} = 0.18 mA, and using Table 19-1 we find Timer/Counter0 supply current I_{TC0} = 0.004 mA. The total current consumption in idle mode is therefore I_{CCTOT} = 0.214 mA, approximately 0.21 mA.

19.2 Current Consumption in Active Mode

Figure 19-1. Active Supply Current vs. Low Frequency (0.1 - 1.0 MHz)

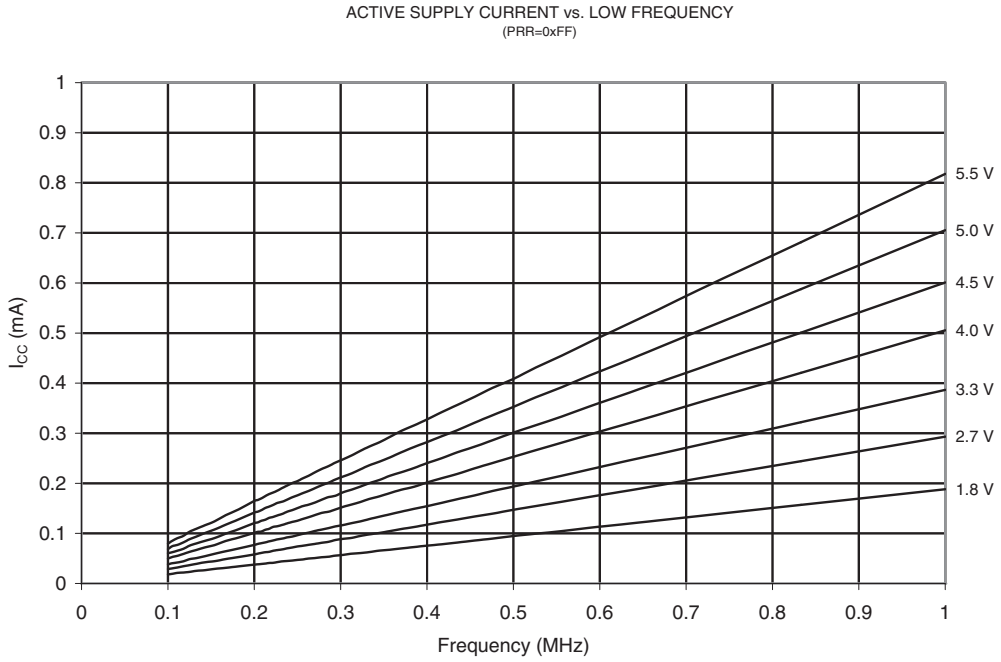

Figure 19-2. Active Supply Current vs. Frequency (1 - 20 MHz)

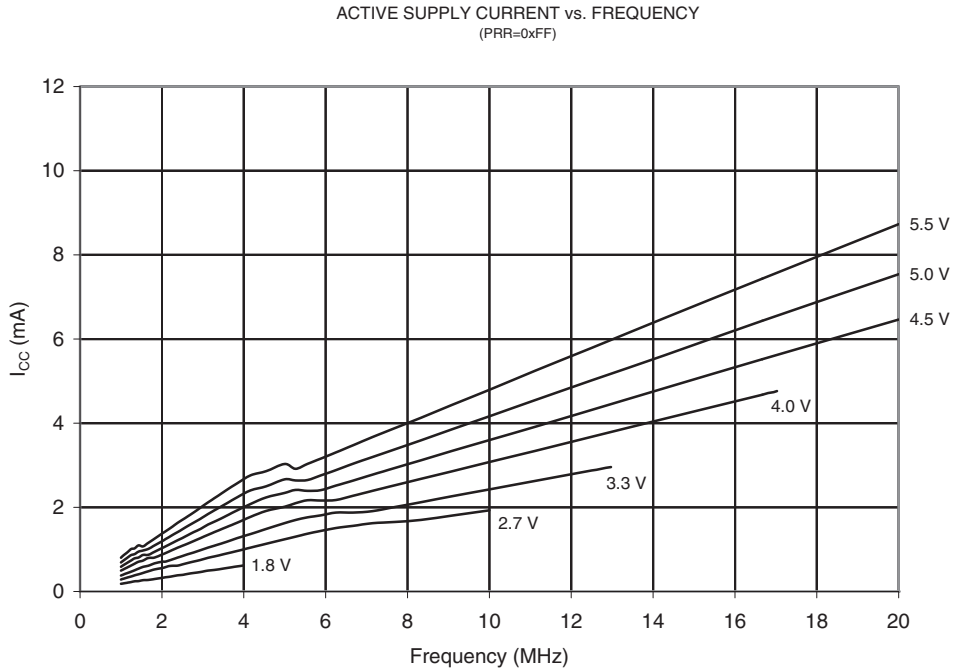

Figure 19-3. Active Supply Current vs. V_{CC} (Internal RC Oscillator, 9.6 MHz)

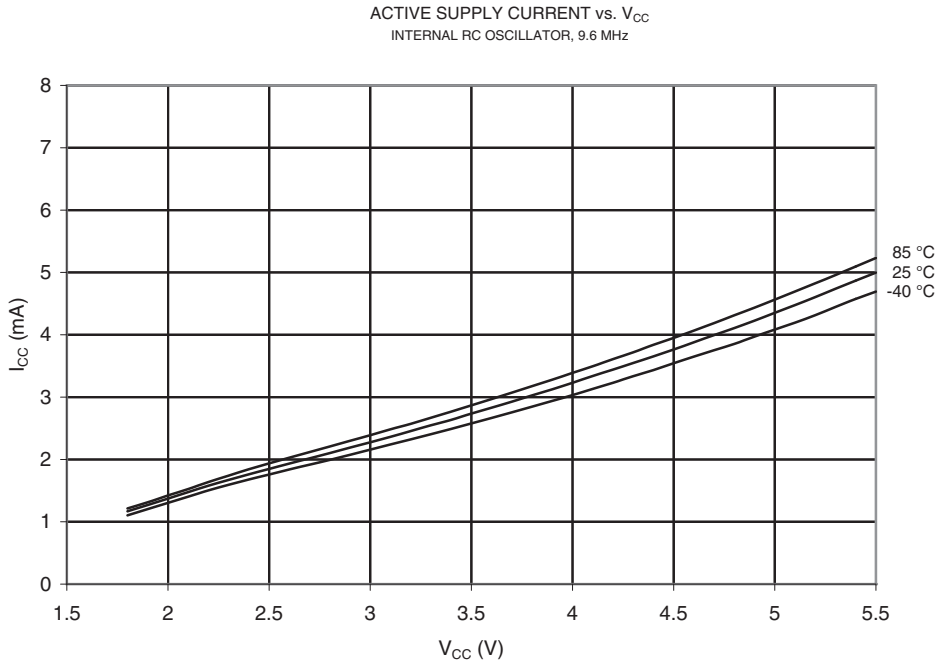

Figure 19-4. Active Supply Current vs. V_{CC} (Internal RC Oscillator, 4.8 MHz)

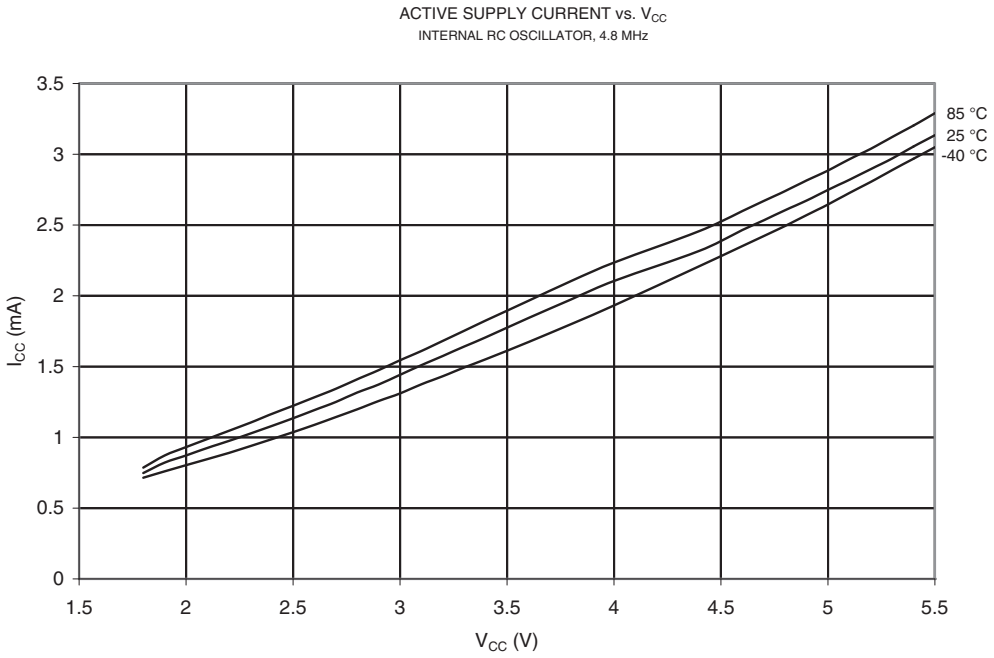

Figure 19-5. Active Supply Current vs. V_{CC} (Internal WDT Oscillator, 128 kHz)

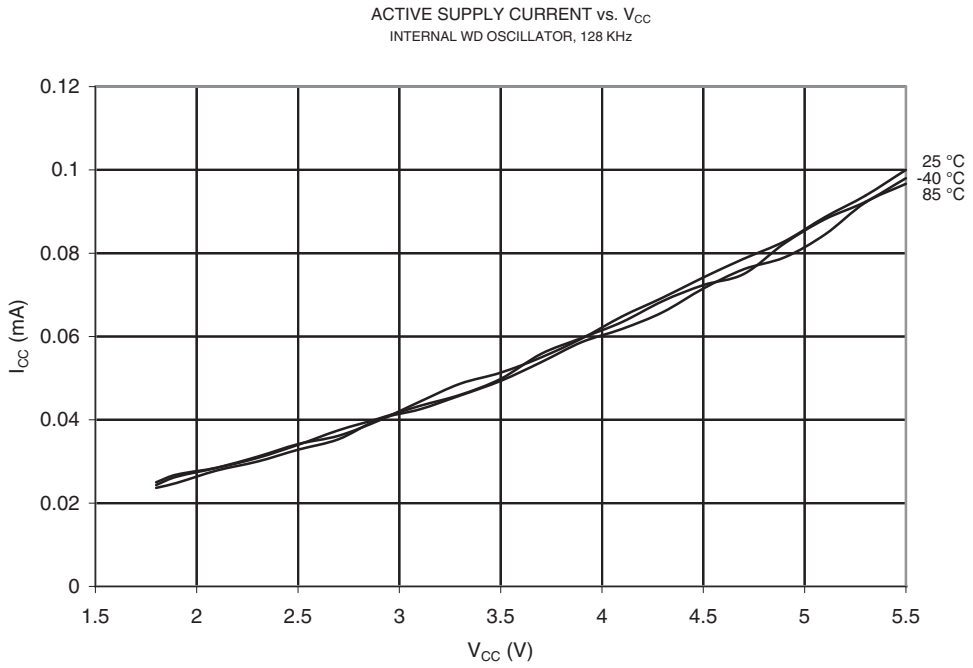

Figure 19-6. Active Supply Current vs. V_{CC} (32 kHz External Clock)

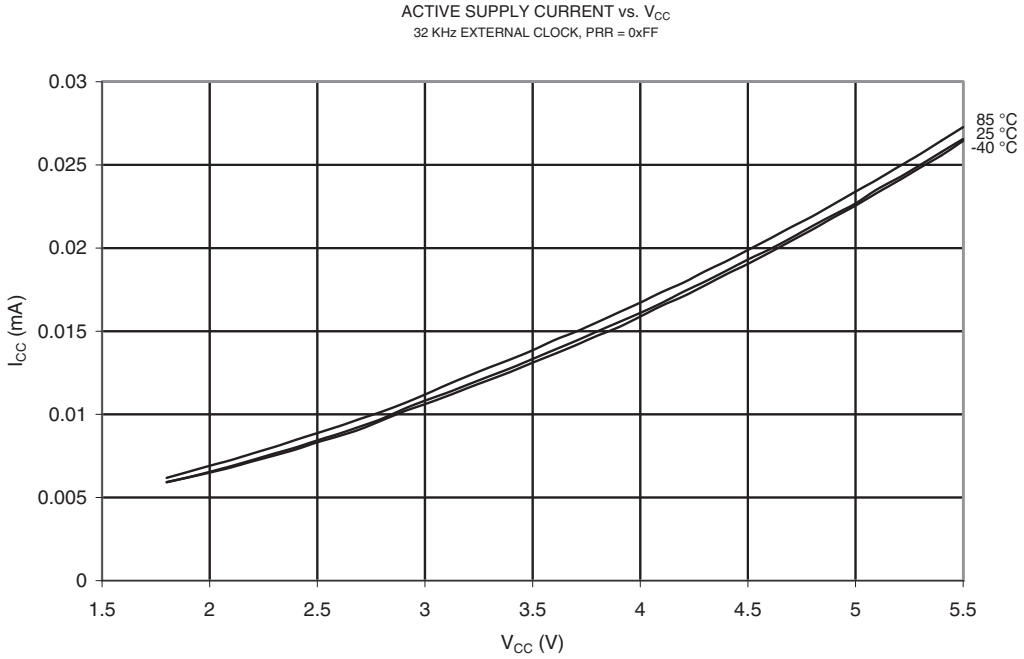

19.3 Current Consumption in Idle Mode

Figure 19-7. Idle Supply Current vs. Low Frequency (0.1 - 1.0 MHz)

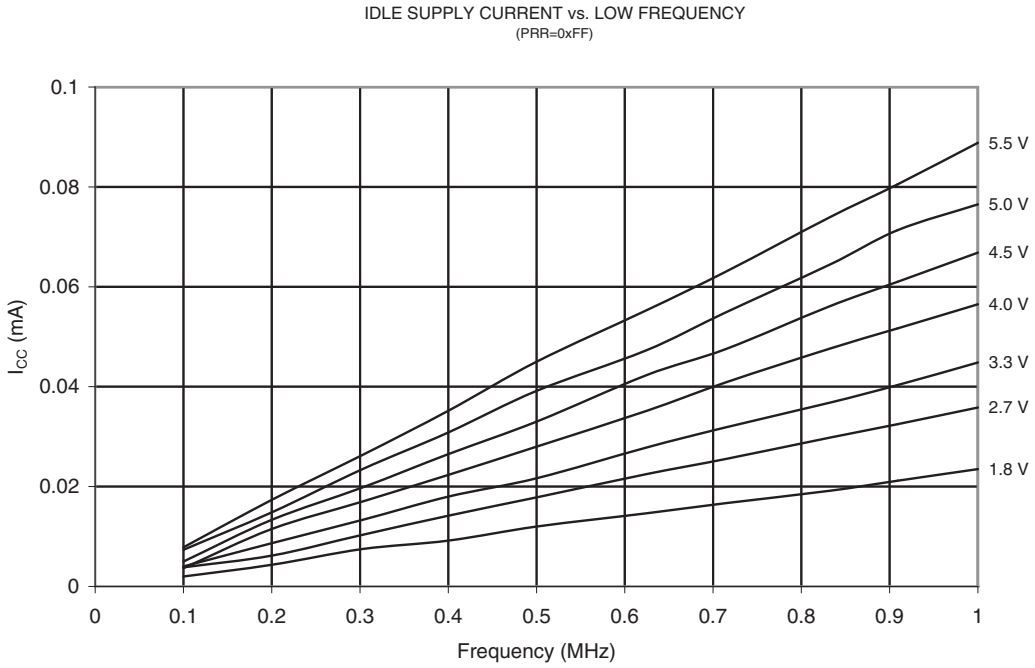

Figure 19-8. Idle Supply Current vs. Frequency (1 - 20 MHz)

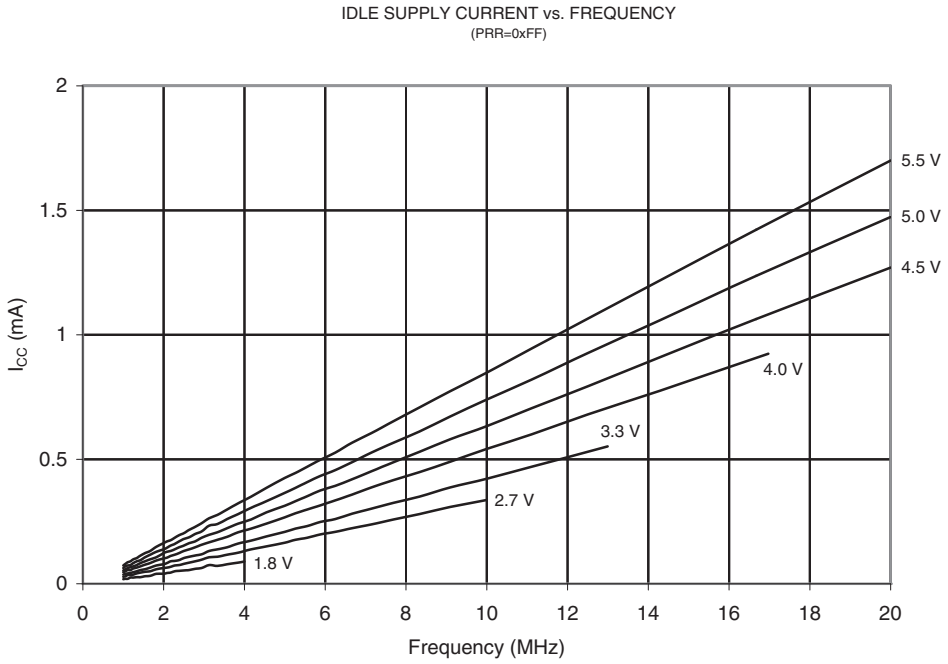

Figure 19-9. Idle Supply Current vs. V_{CC} (Internal RC Oscillator, 9.6 MHz)

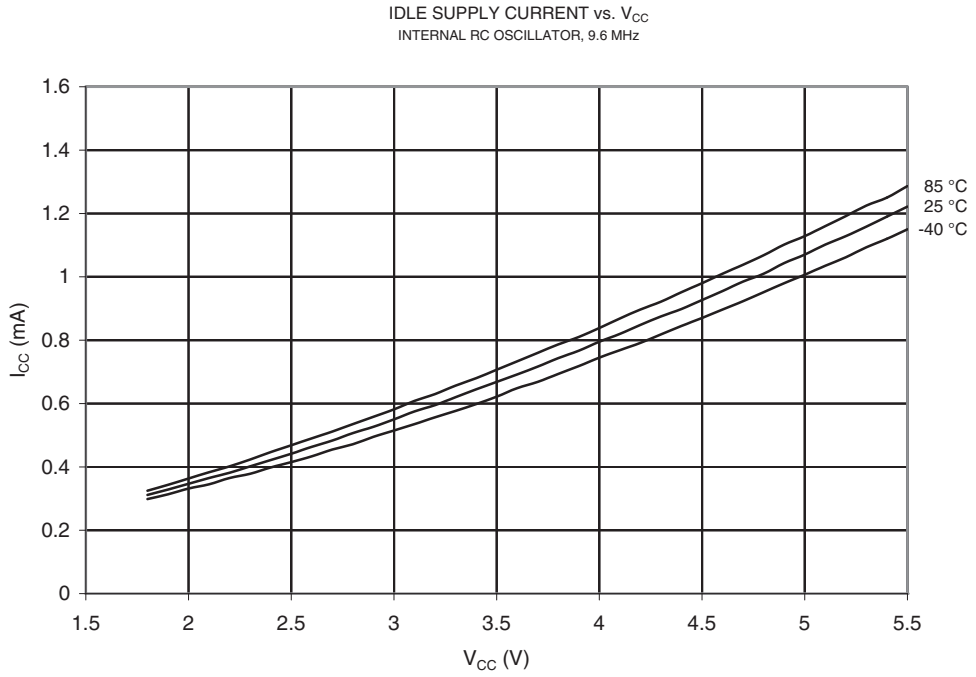

Figure 19-10. Idle Supply Current vs. V_{CC} (Internal RC Oscillator, 4.8 MHz)

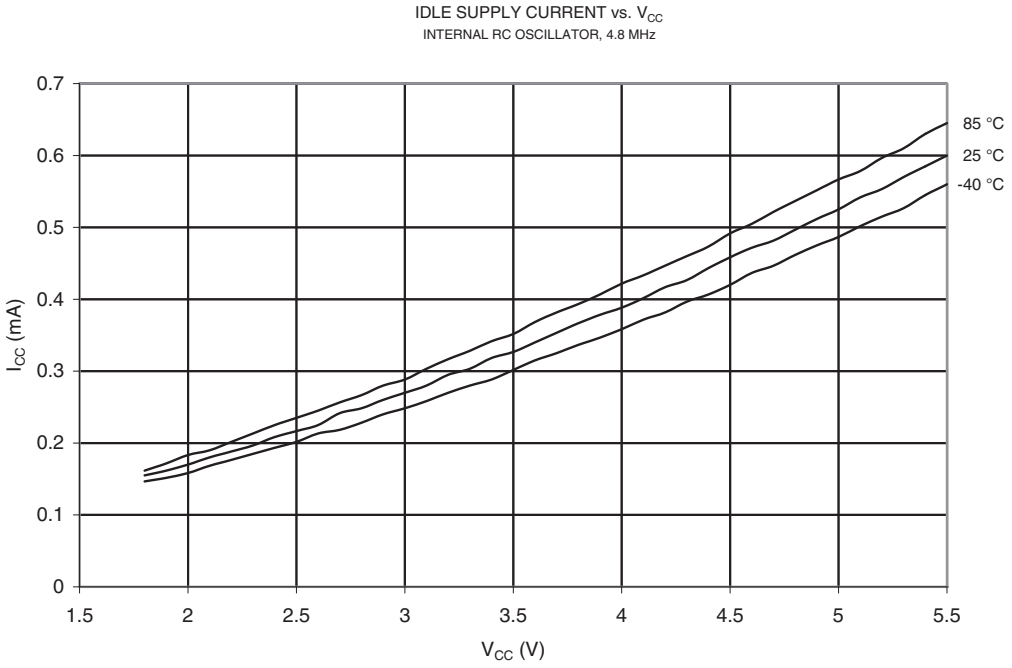

Figure 19-11. Idle Supply Current vs. V_{CC} (Internal RC Oscillator, 128 kHz)

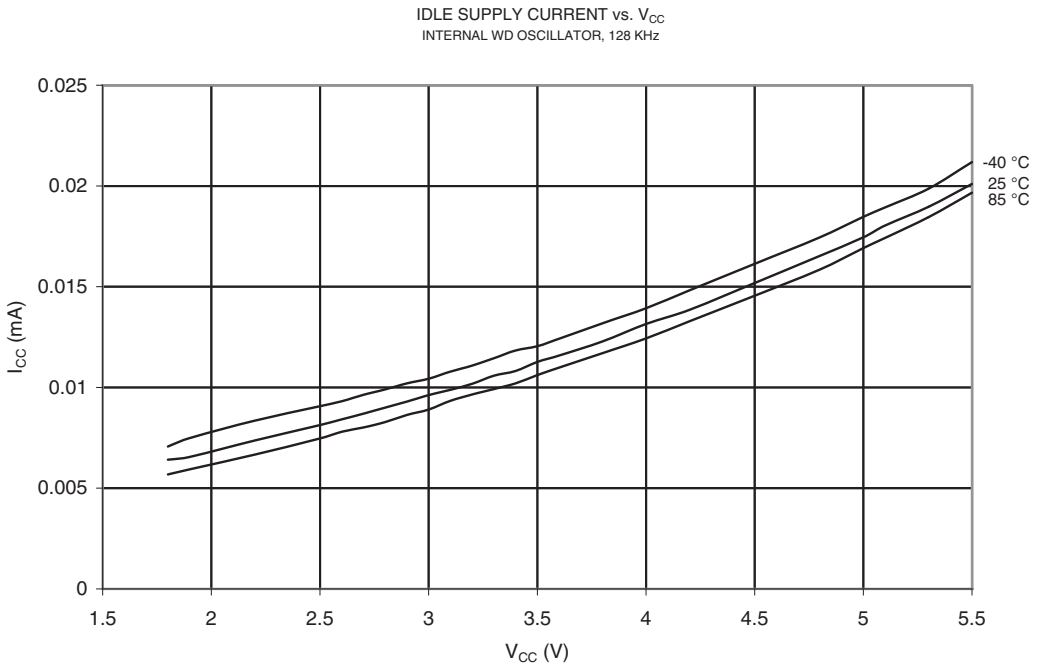

Figure 19-12. Idle Supply Current vs. V_{CC} (32 kHz External Clock)

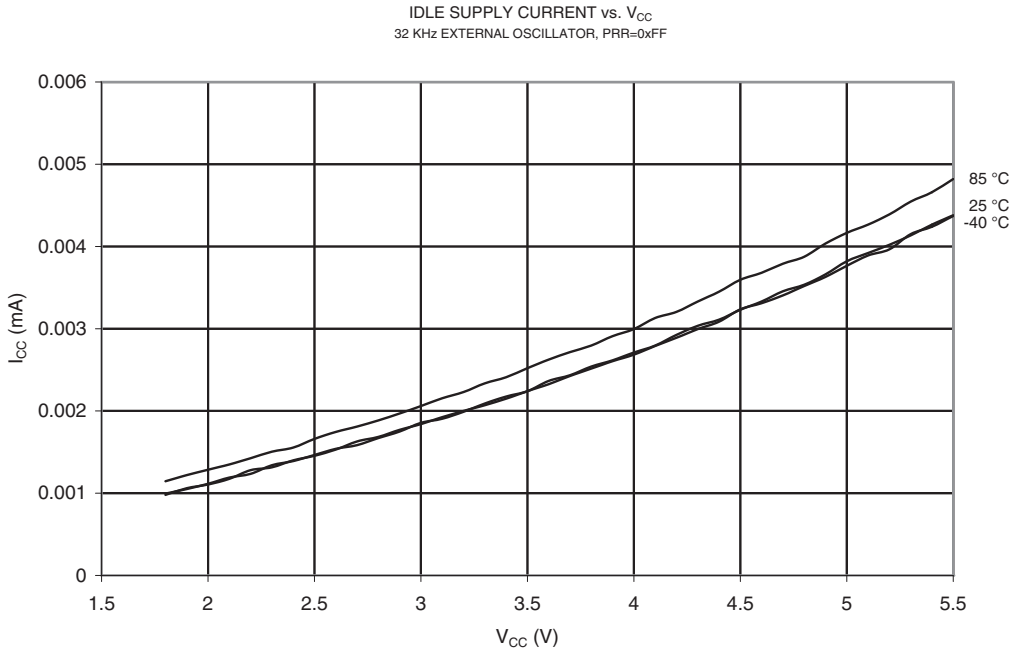

19.4 Current Consumption in Power-down Mode

Figure 19-13. Power-down Supply Current vs. V_{CC} (Watchdog Timer Disabled)

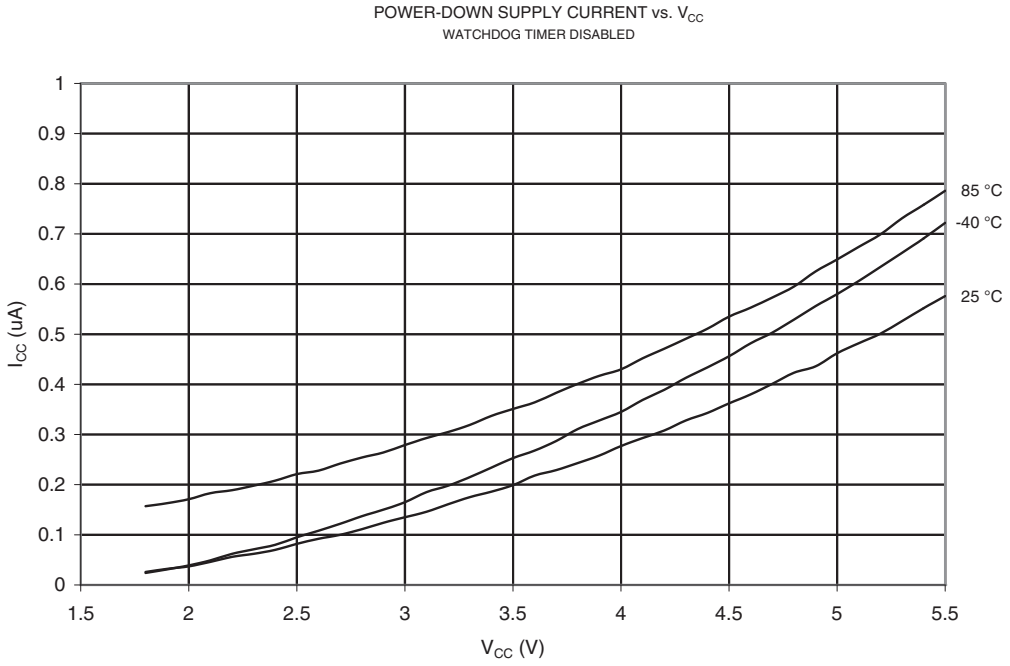

Figure 19-14. Power-down Supply Current vs. V_{CC} (Watchdog Timer Enabled)

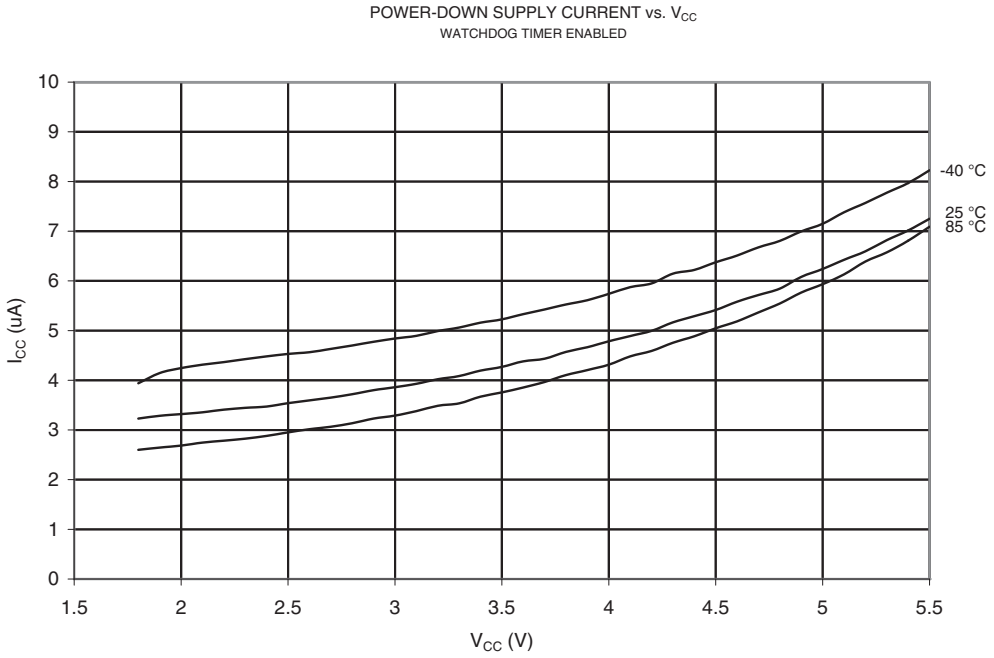

19.5 Current Consumption in Reset

Figure 19-15. Reset Supply Current vs. V_{CC} (0.1 - 1.0 MHz, Excluding Current through the Reset Pull-up)

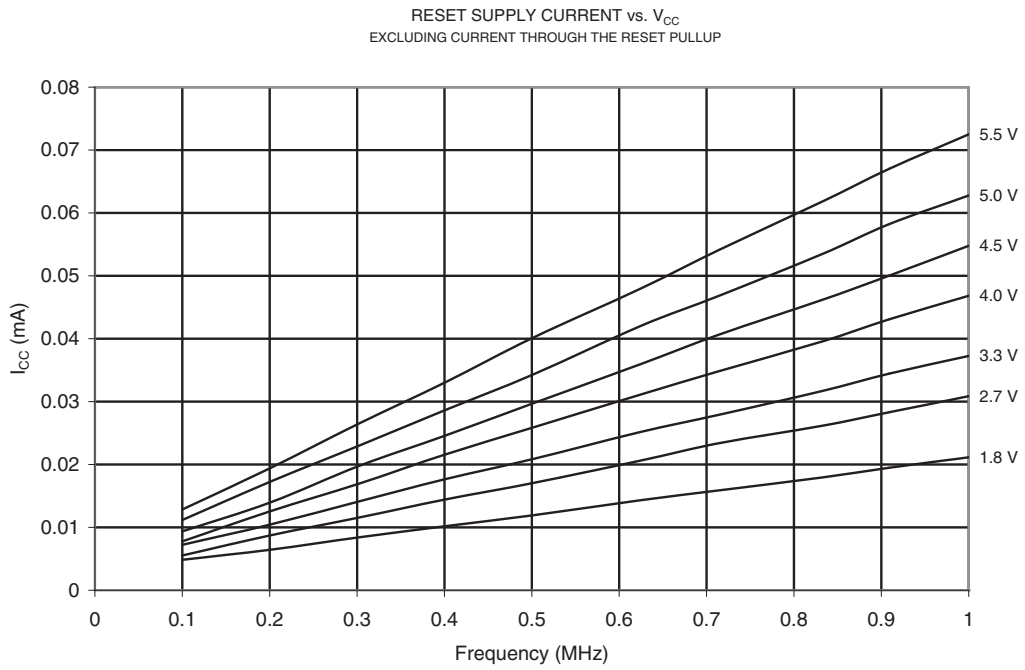

Figure 19-16. Reset Supply Current vs. V_{CC} (1 - 20 MHz, Excluding Current through the Reset Pull-up)

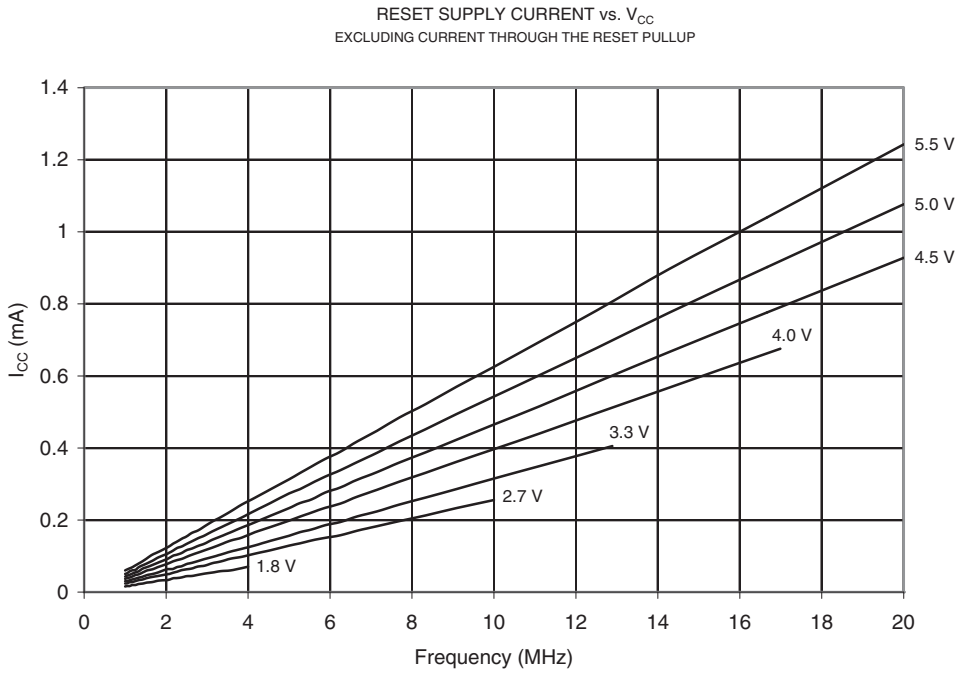

19.6 Current Consumption of Peripheral Units

Figure 19-17. Brownout Detector Current vs. V_{CC}

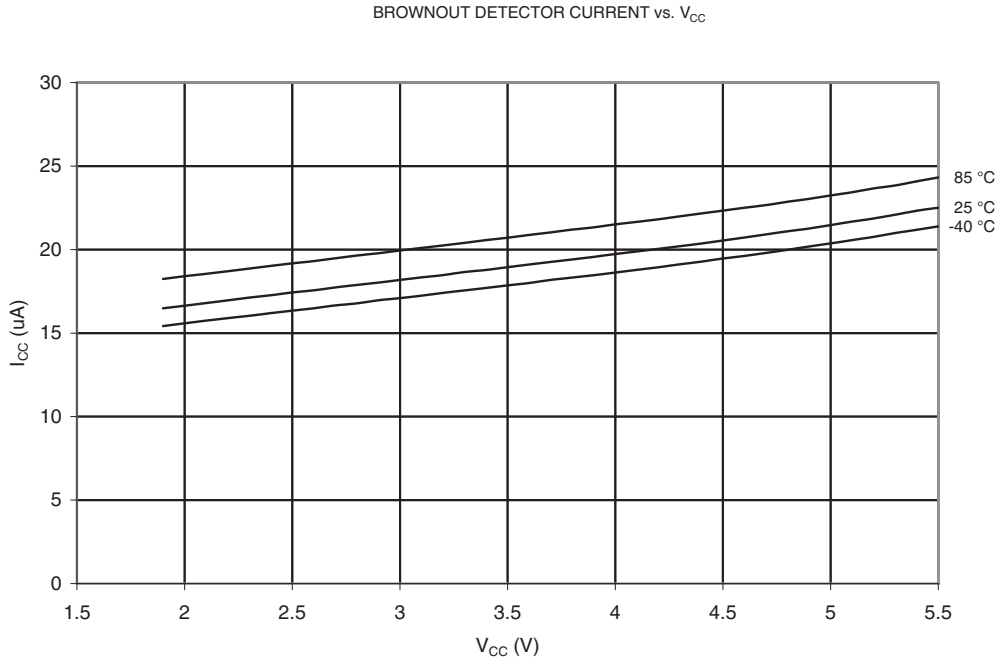

Figure 19-18. ADC Current vs. V_{CC}

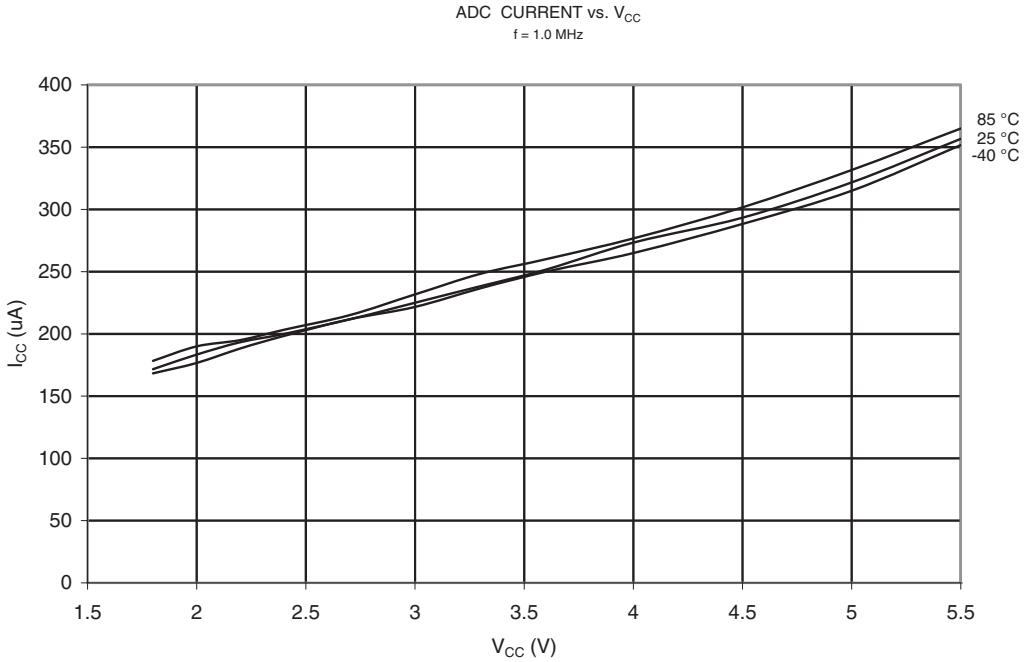

Figure 19-19. Analog Comparator Current vs. V_{CC}

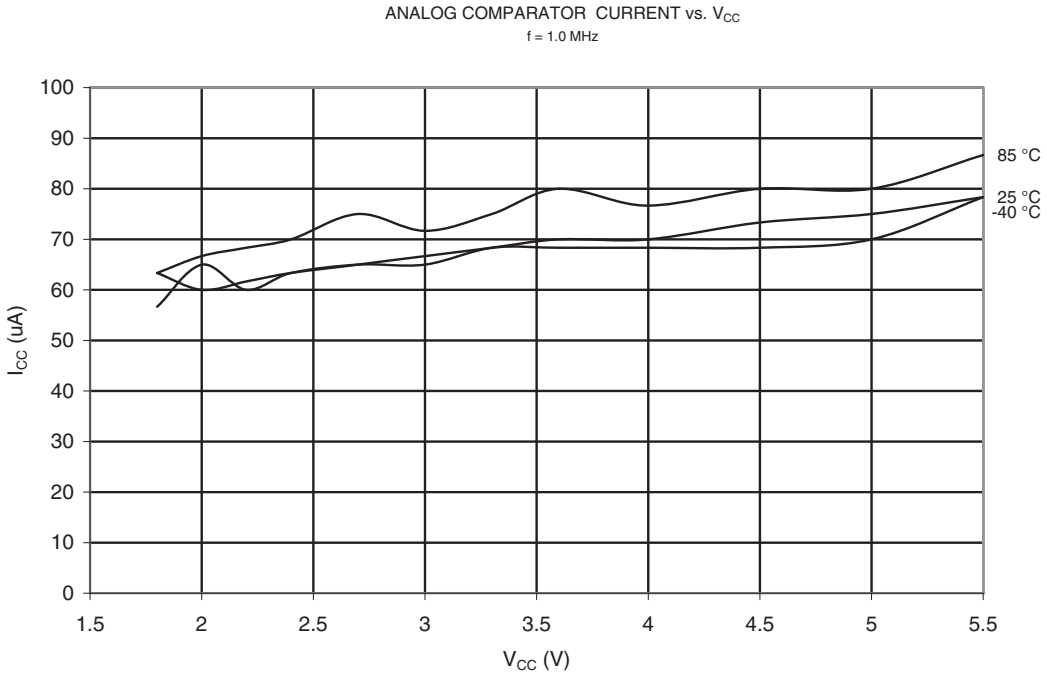

Figure 19-20. Programming Current vs. V_{CC}

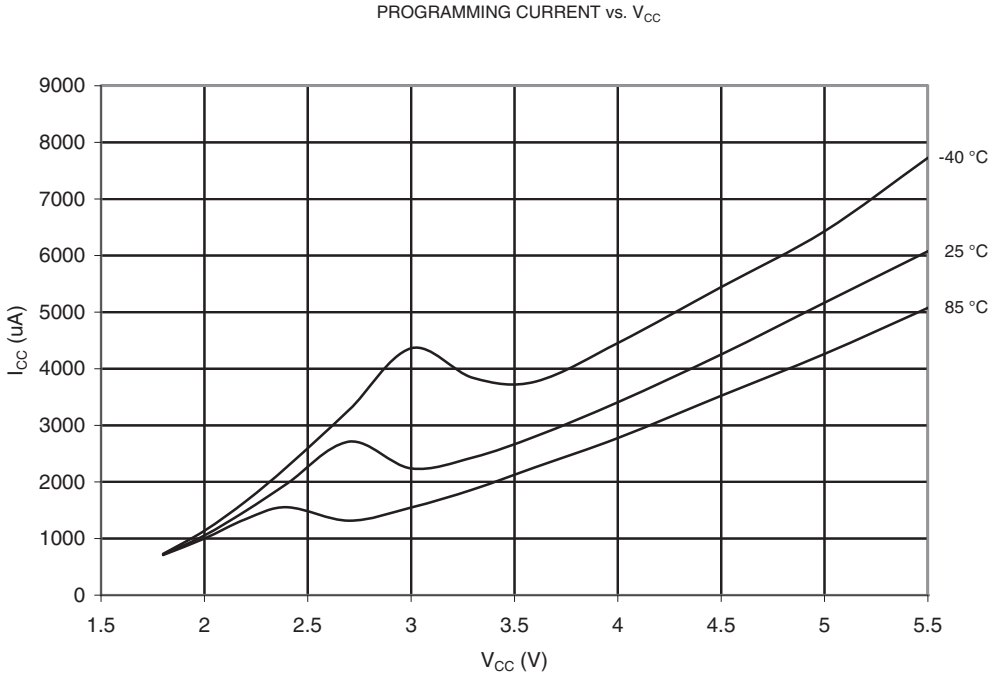

19.7 Pull-up Resistors

Figure 19-21. Pull-up Resistor Current vs. Input Voltage (I/O Pin, V_{CC} = 1.8V)

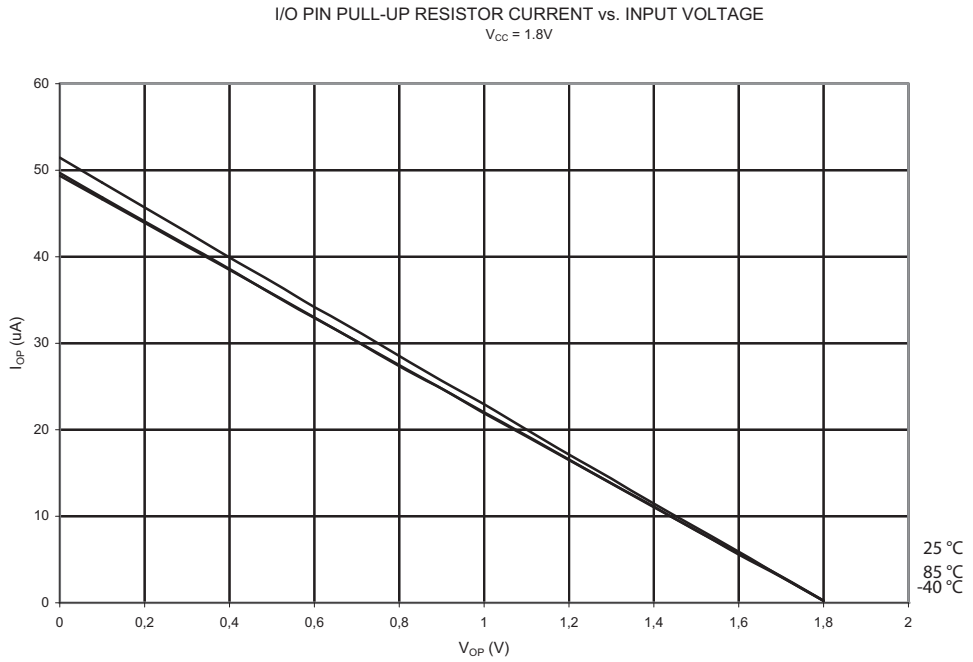

Figure 19-22. Pull-up Resistor Current vs. Input Voltage (I/O Pin, V_{CC} = 3V)

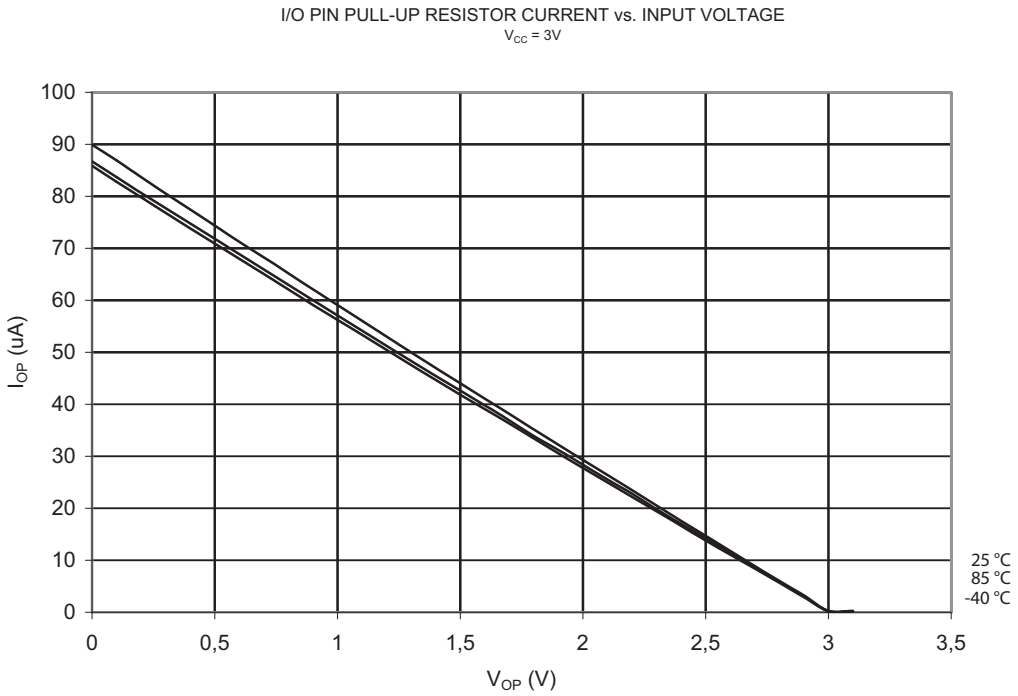

Figure 19-23. Pull-up Resistor Current vs. Input Voltage (I/O Pin, V_{CC} = 5V)

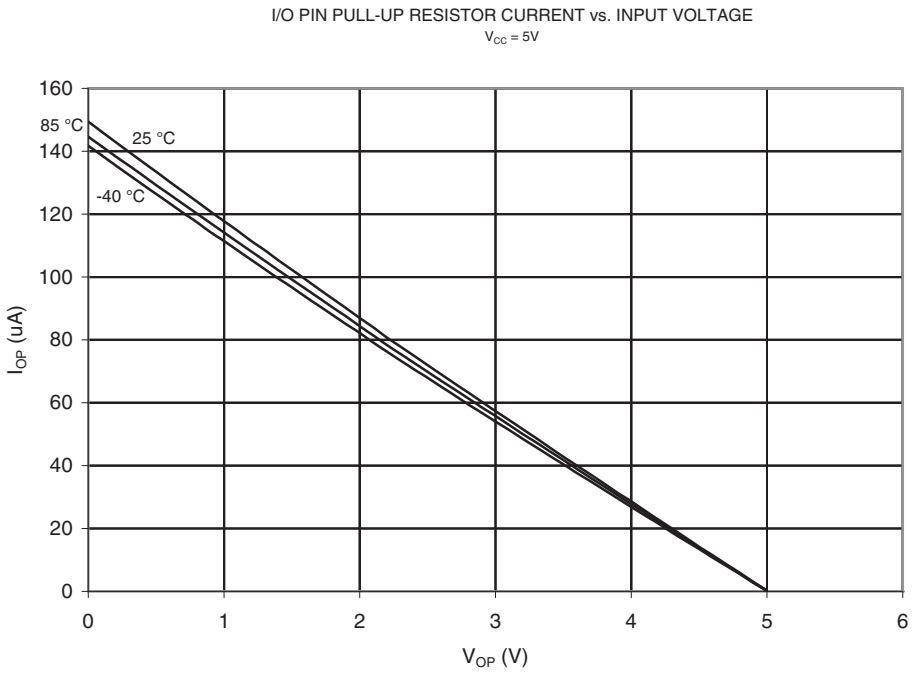

Figure 19-24. Reset Pull-up Resistor Current vs. Reset Pin Voltage (V_{CC} = 1.8V)

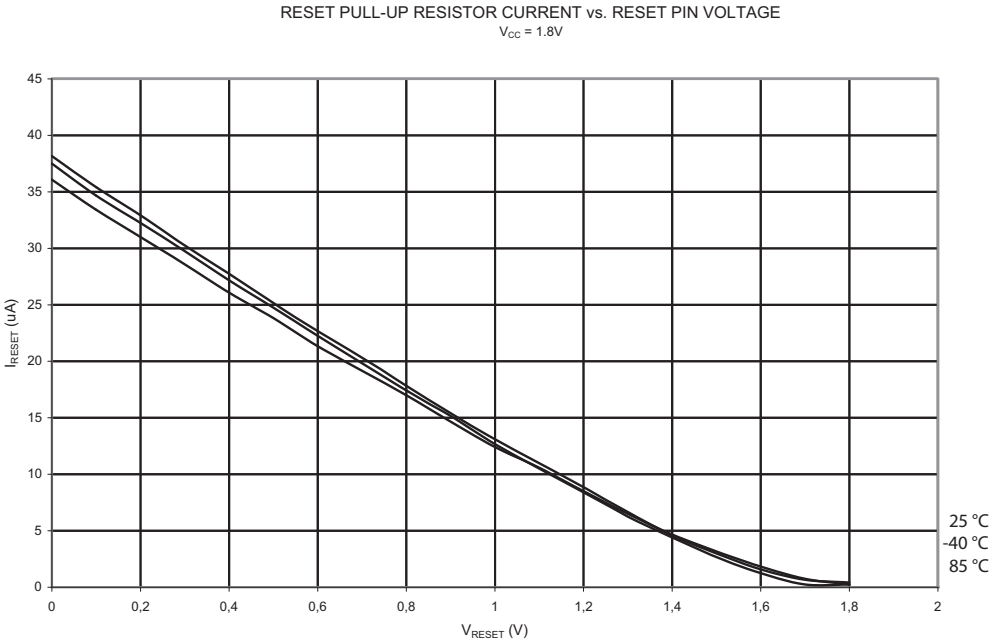

Figure 19-25. Reset Pull-up Resistor Current vs. Reset Pin Voltage (V_{CC} = 3V)

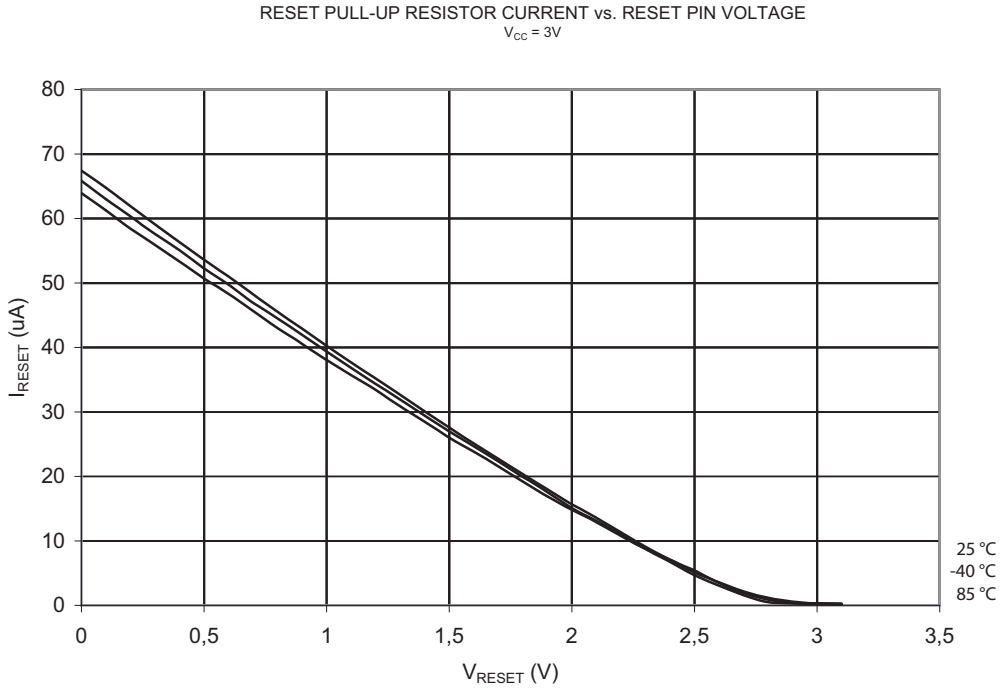

Figure 19-26. Reset Pull-up Resistor Current vs. Reset Pin Voltage (V_{CC} = 5V)

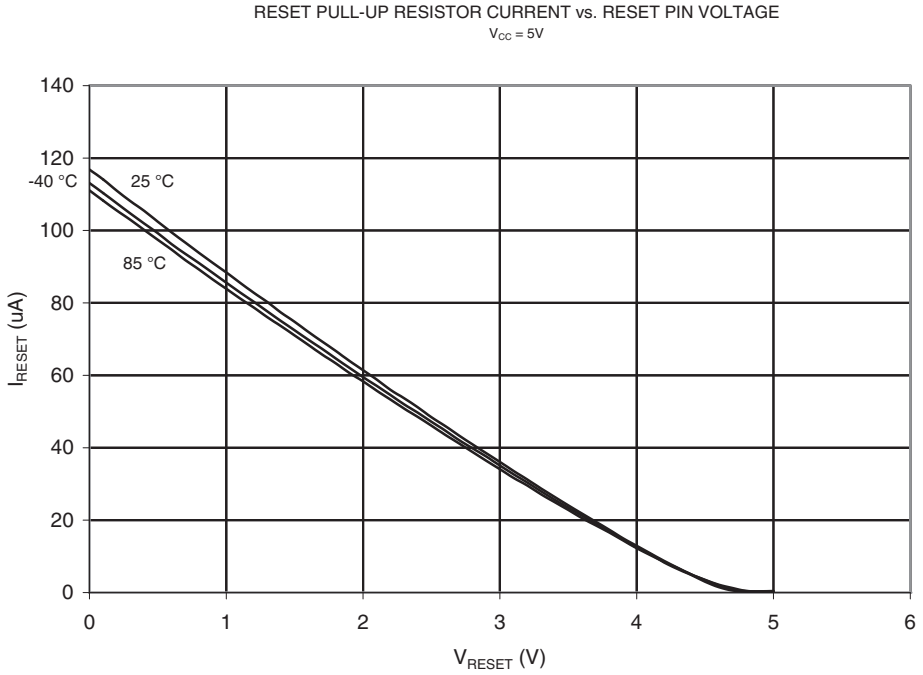

19.8 Output Driver Strength (Low Power Pins)

Figure 19-27. V_{OH}: I/O Pin Output Voltage vs. Source Current (Low Power Pins, V_{CC} = 1.8V)

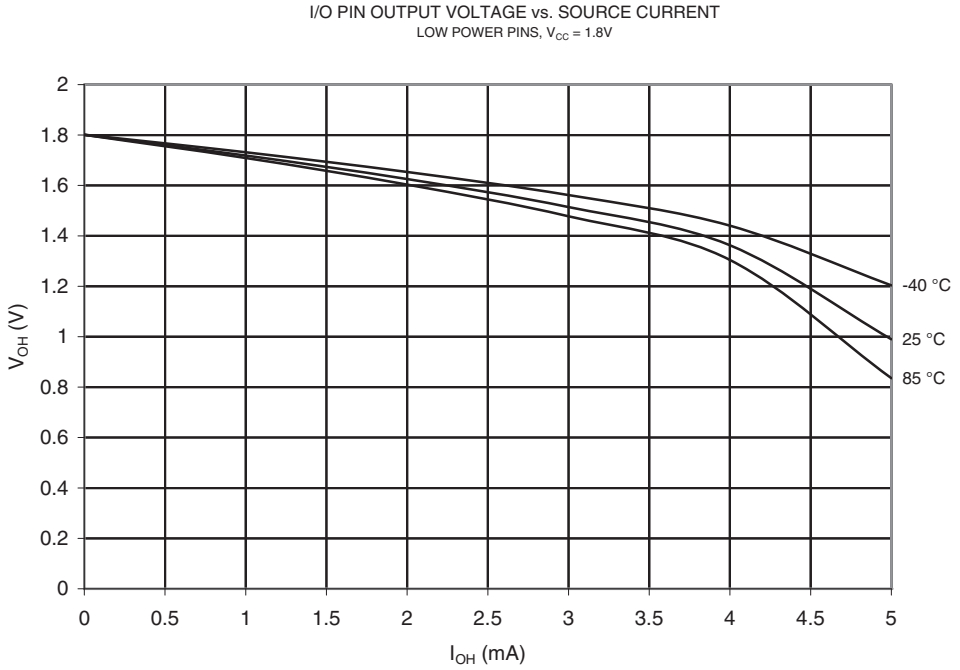

Figure 19-28. V_{OH}: I/O Pin Output Voltage vs. Source Current (Low Power Pins, V_{CC} = 3V)

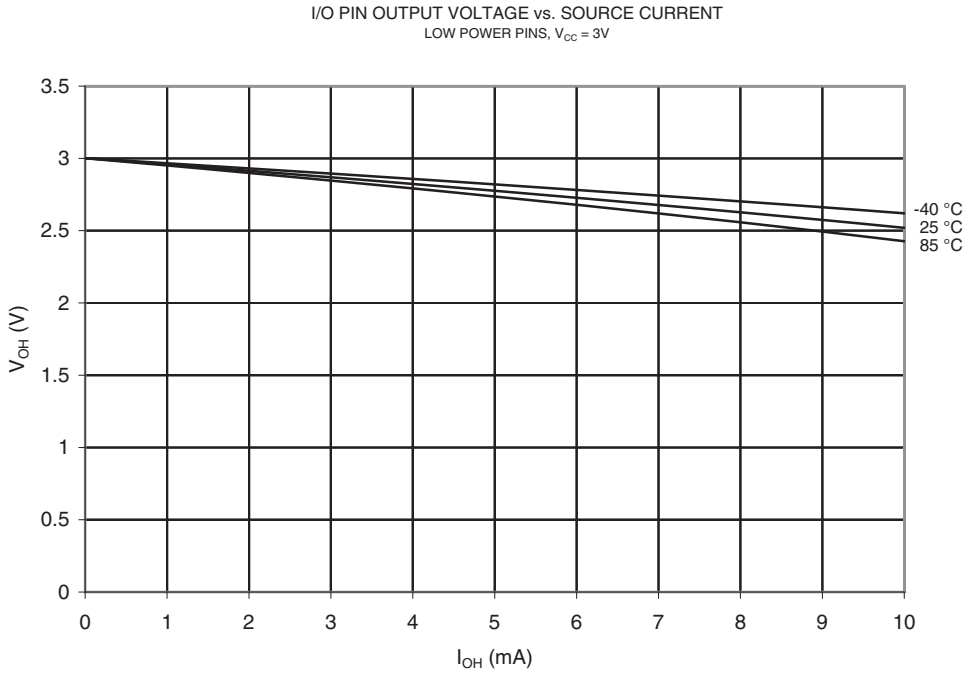

Figure 19-29. V_{OH}: I/O Pin Output Voltage vs. Source Current (Low Power Pins, V_{CC} = 5V)

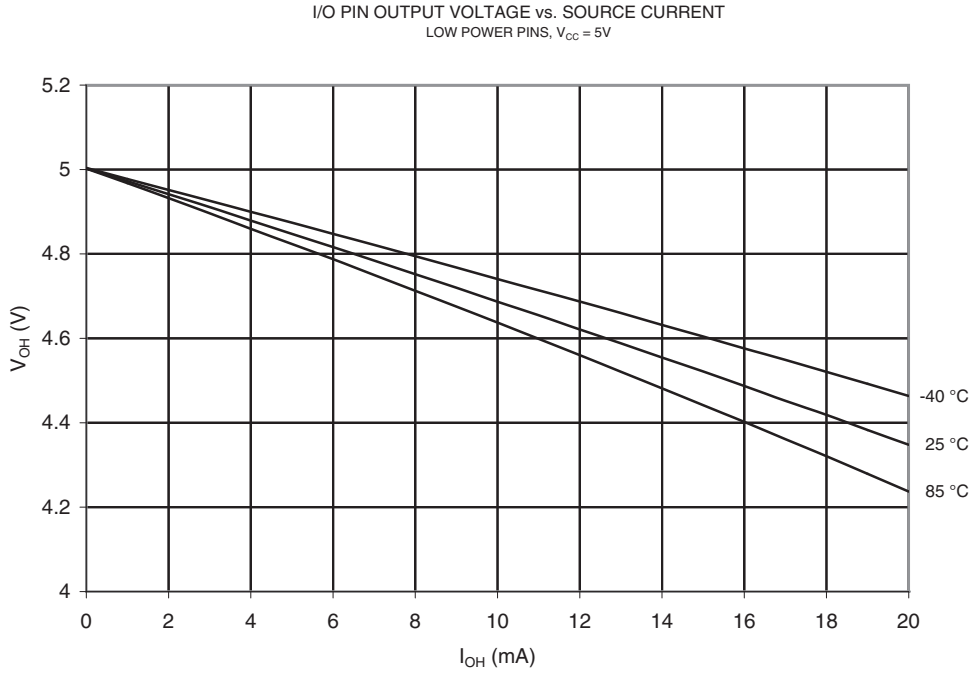

Figure 19-30. V_{OL}: I/O Pin Output Voltage vs. Sink Current (Low Power Pins, V_{CC} = 1.8V)

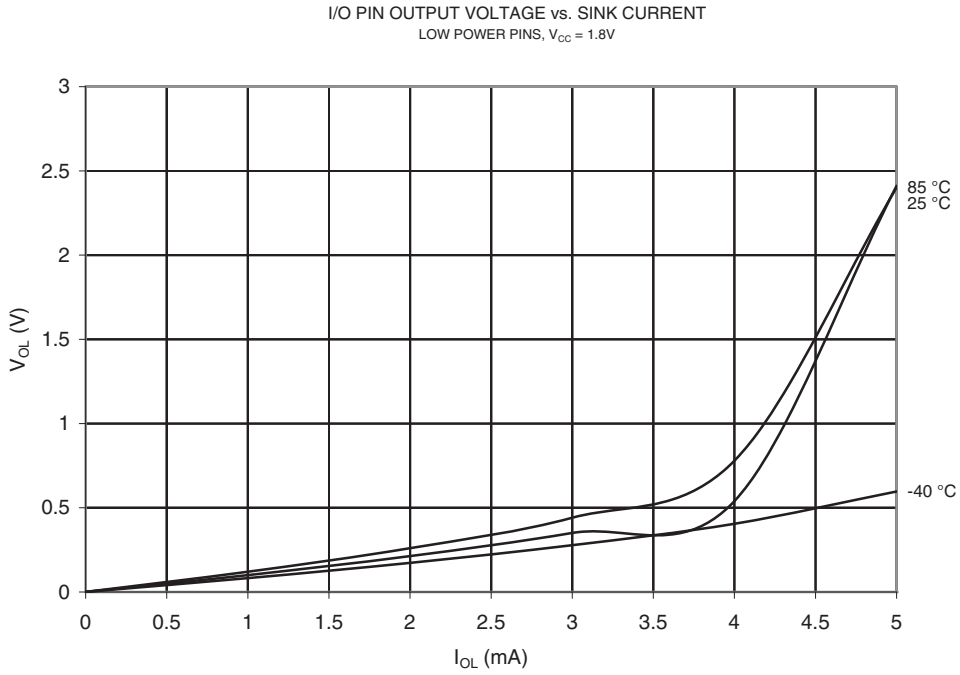

Figure 19-31. V_{OL}: I/O Pin Output Voltage vs. Sink Current (Low Power Pins, V_{CC} = 3V)

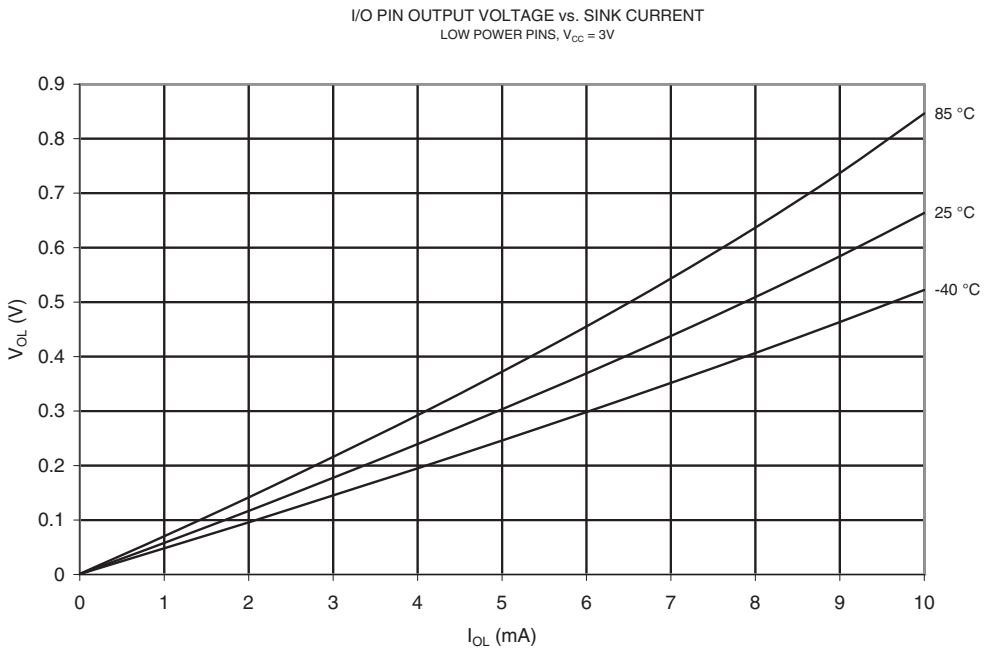

Figure 19-32. V_{OL}: I/O Pin Output Voltage vs. Sink Current (Low Power Pins, V_{CC} = 5V)

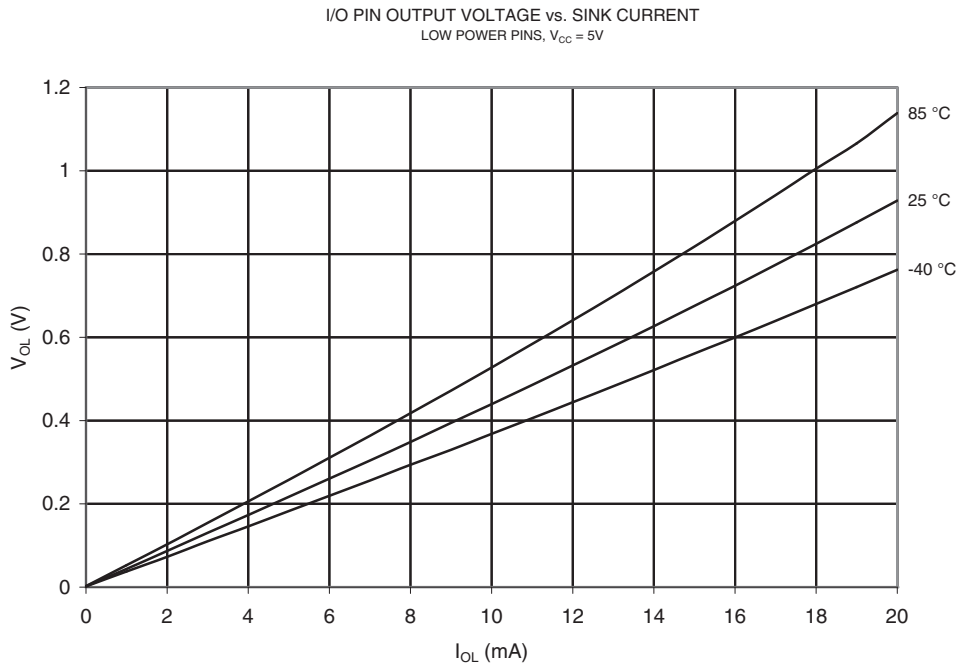

19.9 Output Driver Strength (Regular Pins)

Figure 19-33. V_{OH}: I/O Pin Output Voltage vs. Source Current (V_{CC} = 1.8V)

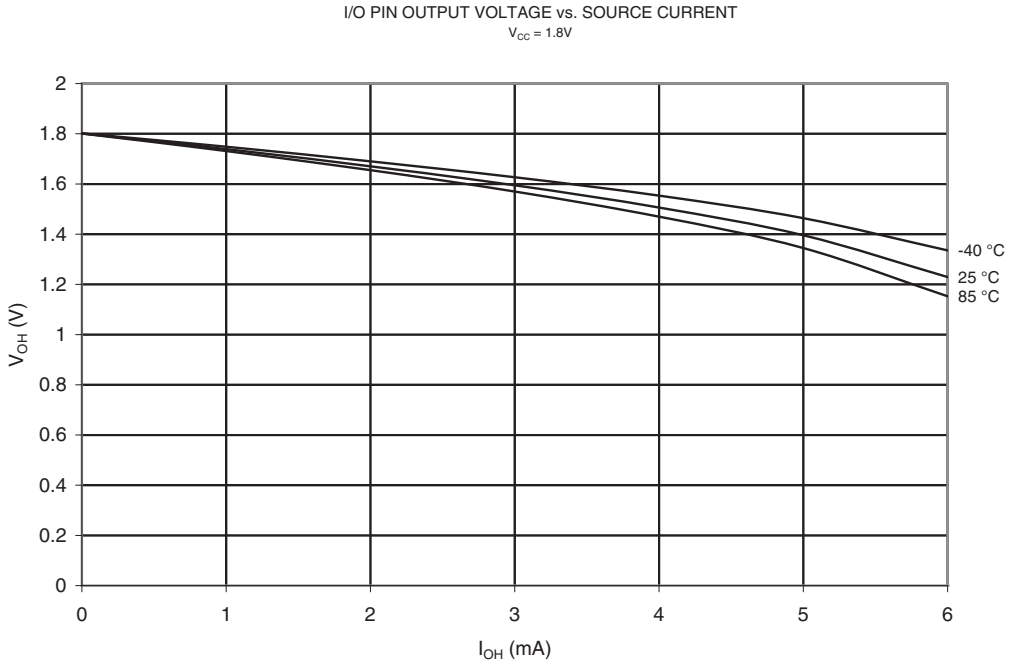

Figure 19-34. V_{OH}: I/O Pin Output Voltage vs. Source Current (V_{CC} = 3V)

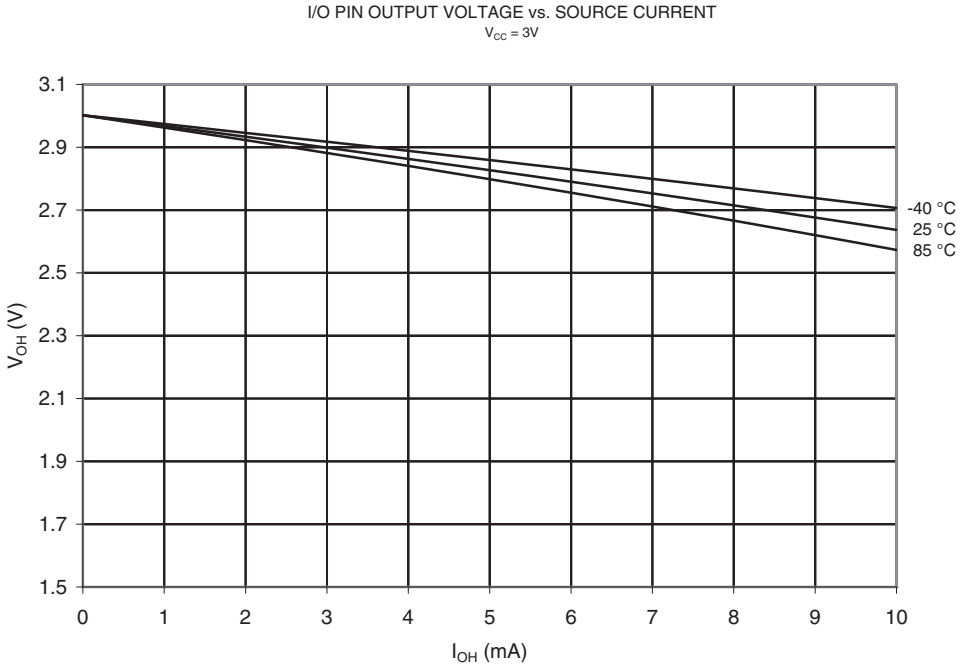

Figure 19-35. V_{OH}: I/O Pin Output Voltage vs. Source Current (V_{CC} = 5V)

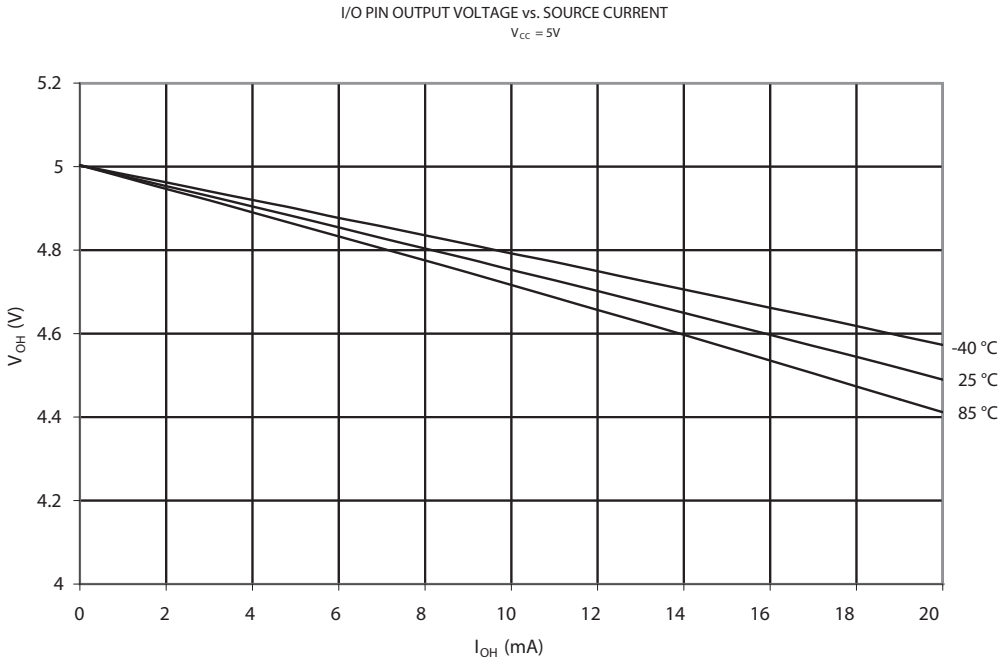

Figure 19-36. V_{OL}: I/O Pin Output Voltage vs. Sink Current (V_{CC} = 1.8V)

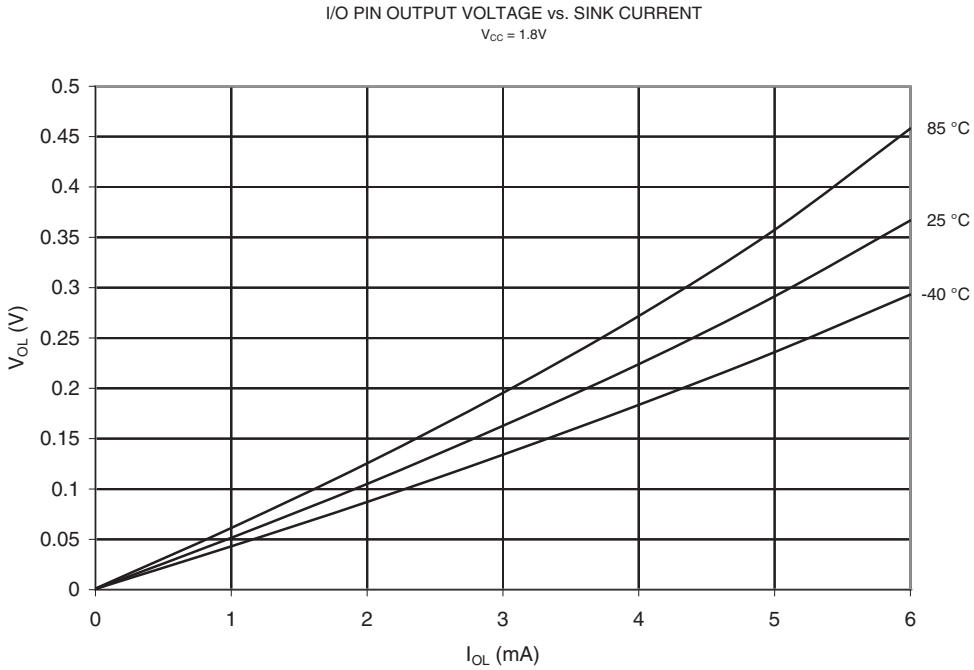

Figure 19-37. V_{OL}: I/O Pin Output Voltage vs. Sink Current (V_{CC} = 3V)

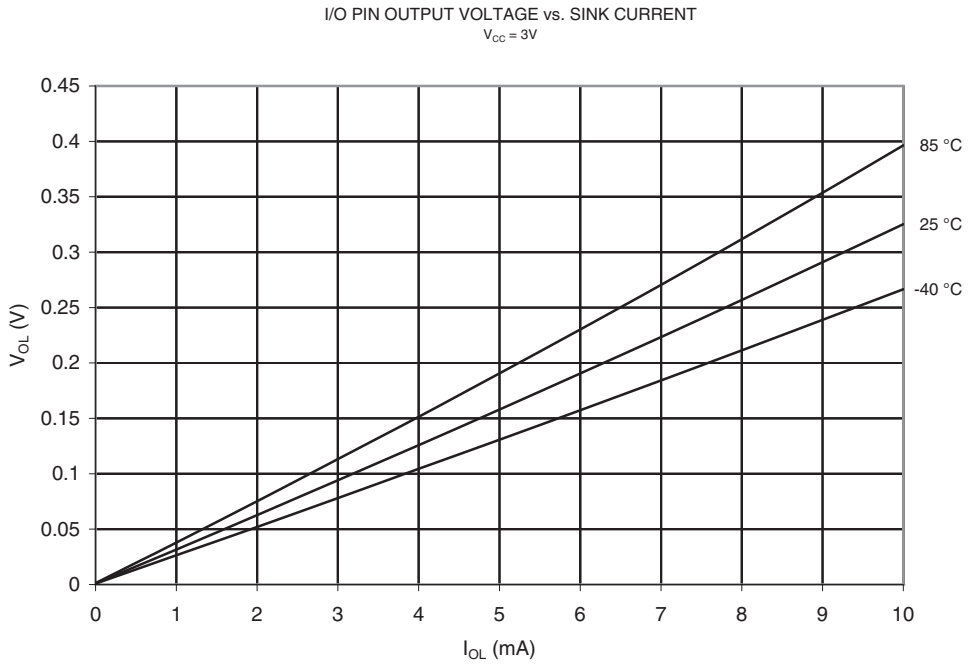

Figure 19-38. V_{OL}: I/O Pin Output Voltage vs. Sink Current (V_{CC} = 5V)

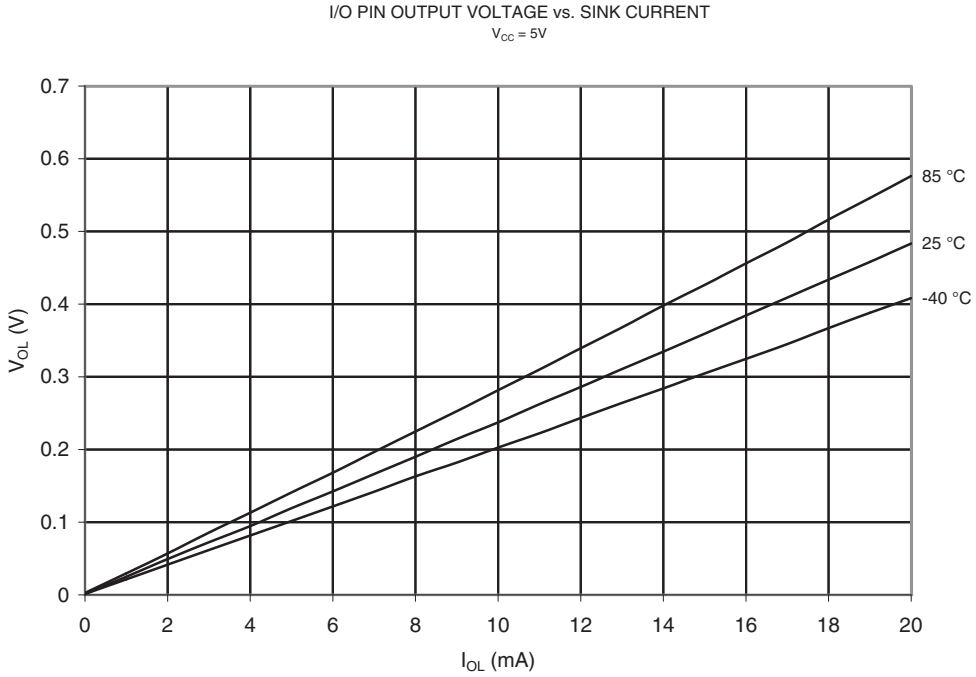

Figure 19-39. V_{OH}: Reset Pin as I/O, Output Voltage vs. Source Current (V_{CC} = 1.8V)

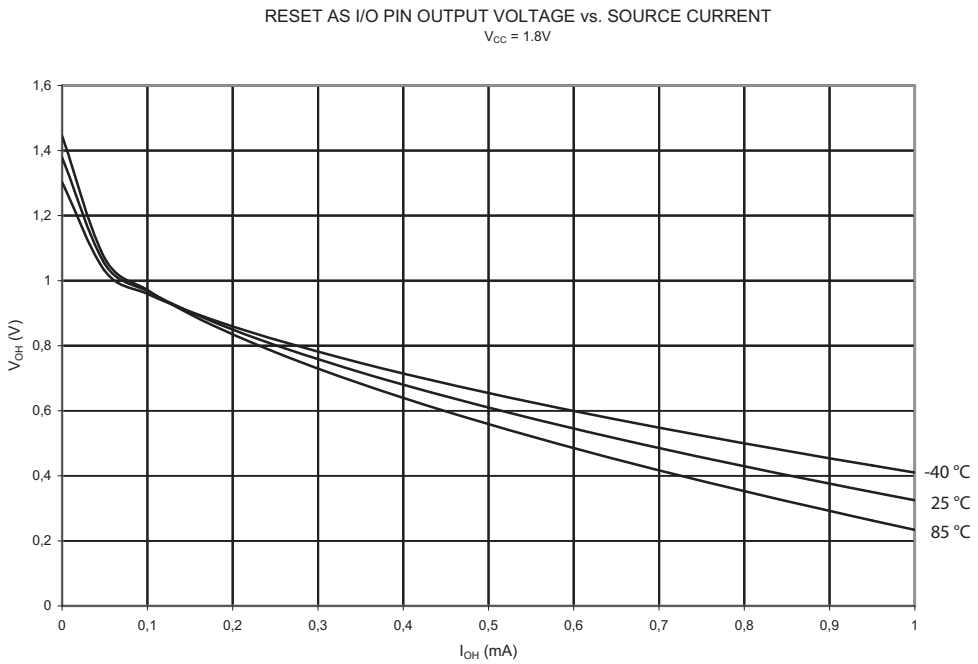

Figure 19-40. V_{OH}: Reset Pin as I/O, Output Voltage vs. Source Current (V_{CC} = 3V)

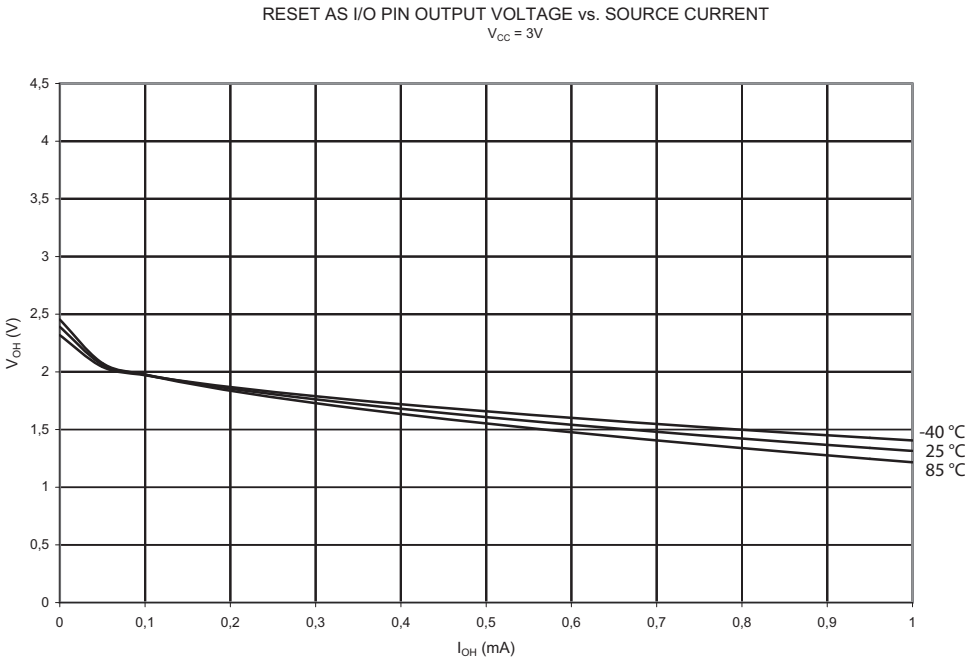

Figure 19-41. V_{OH}: Reset Pin as I/O, Output Voltage vs. Source Current (V_{CC} = 5V)

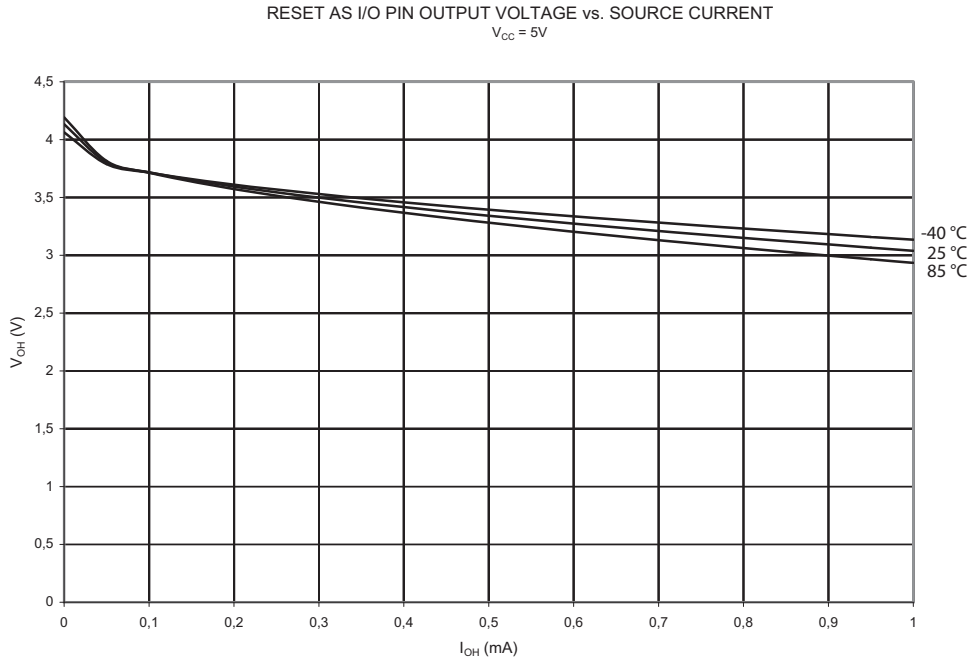

Figure 19-42. V_{OL}: Reset Pin as I/O, Output Voltage vs. Sink Current (V_{CC} = 1.8V)

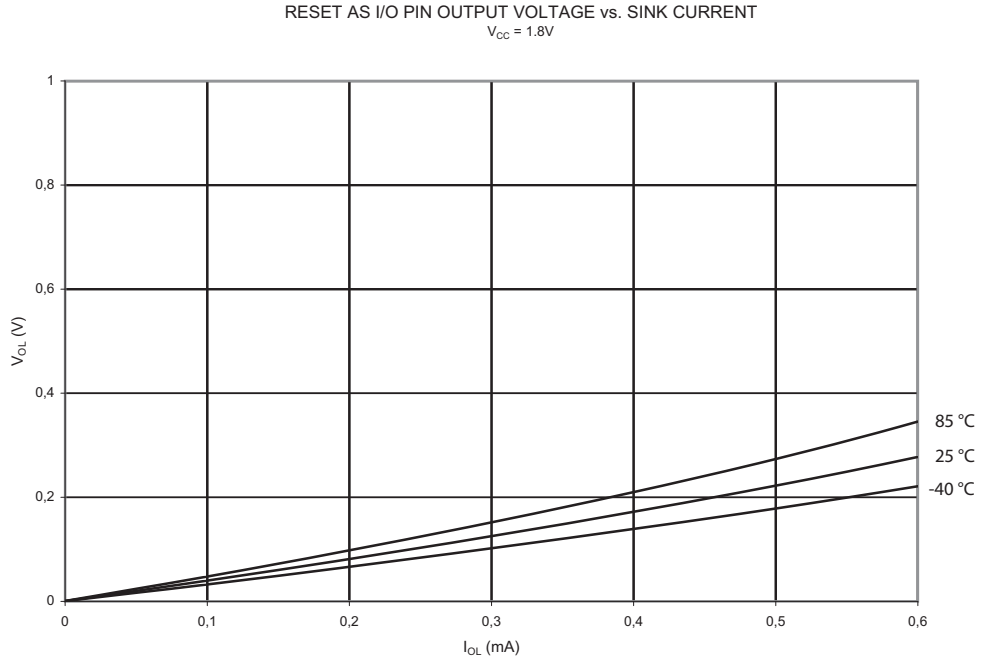

Figure 19-43. V_{OL}: Reset Pin as I/O, Output Voltage vs. Sink Current (V_{CC} = 3V)

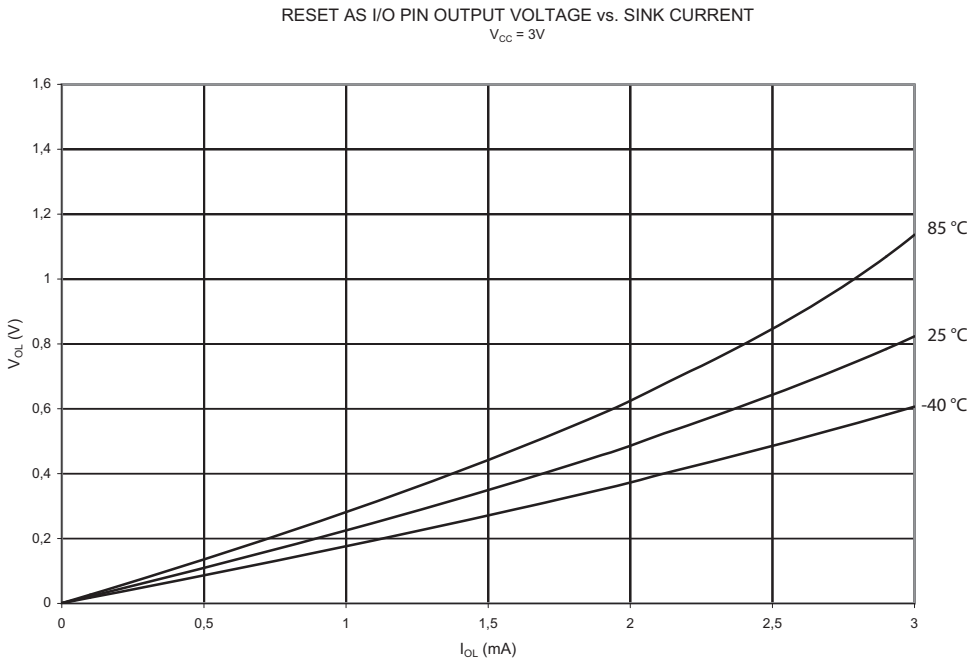

Figure 19-44. V_{OL}: Reset Pin as I/O, Output Voltage vs. Sink Current (V_{CC} = 5V)

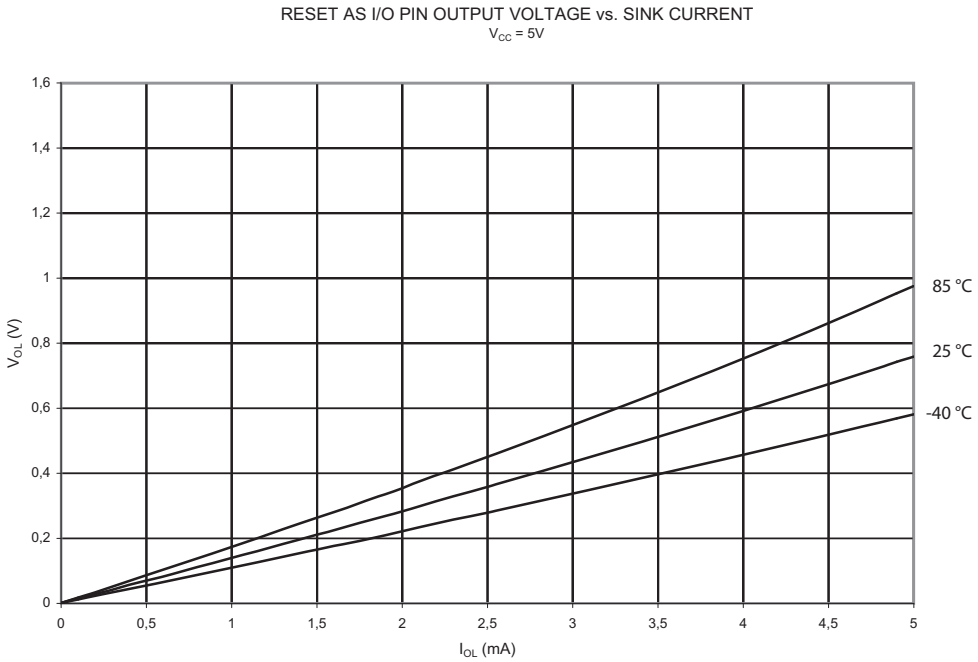

19.10 Input Thresholds and Hysteresis (for I/O Ports)

Figure 19-45. V_{IH}: Input Threshold Voltage vs. V_{CC} (I/O Pin, Read as '1')

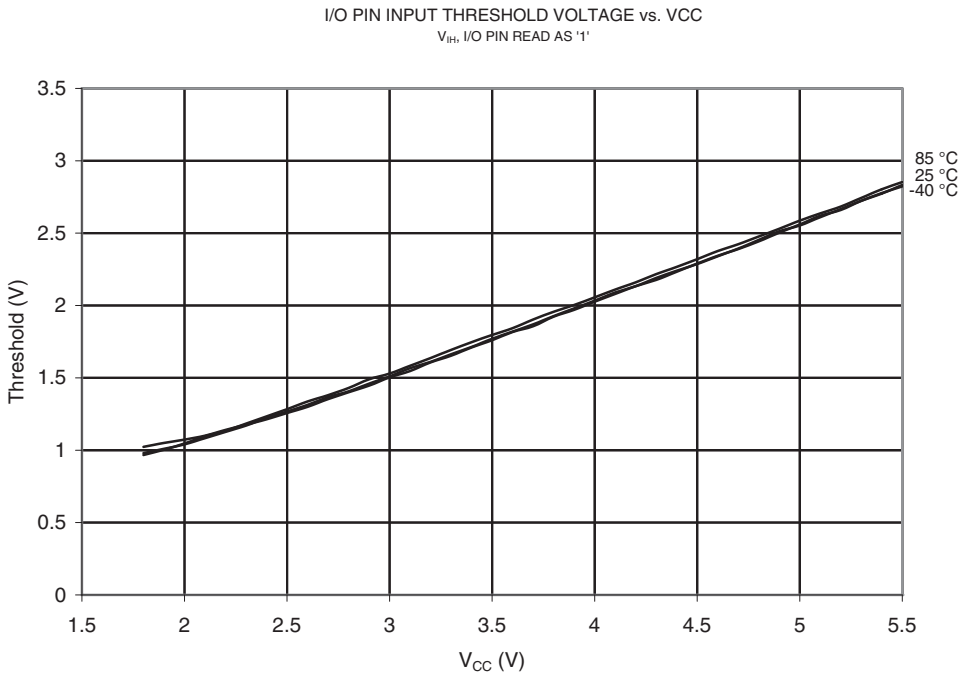

Figure 19-46. V_{IL}: Input Threshold Voltage vs. V_{CC} (I/O Pin, Read as '0')

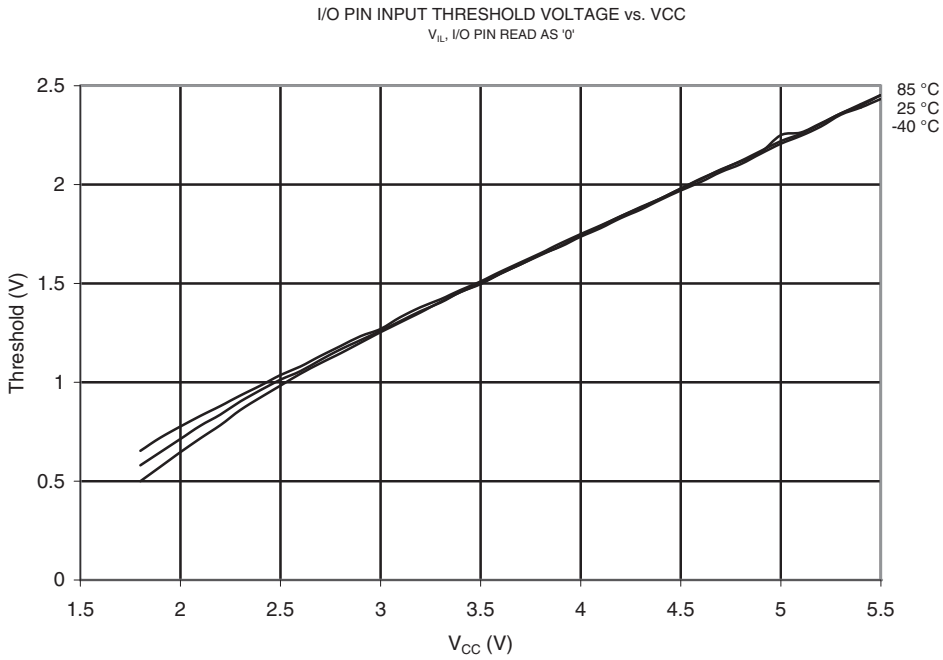

Figure 19-47. V_{IH}-V_{IL}: Input Hysteresis vs. V_{CC} (I/O Pin)

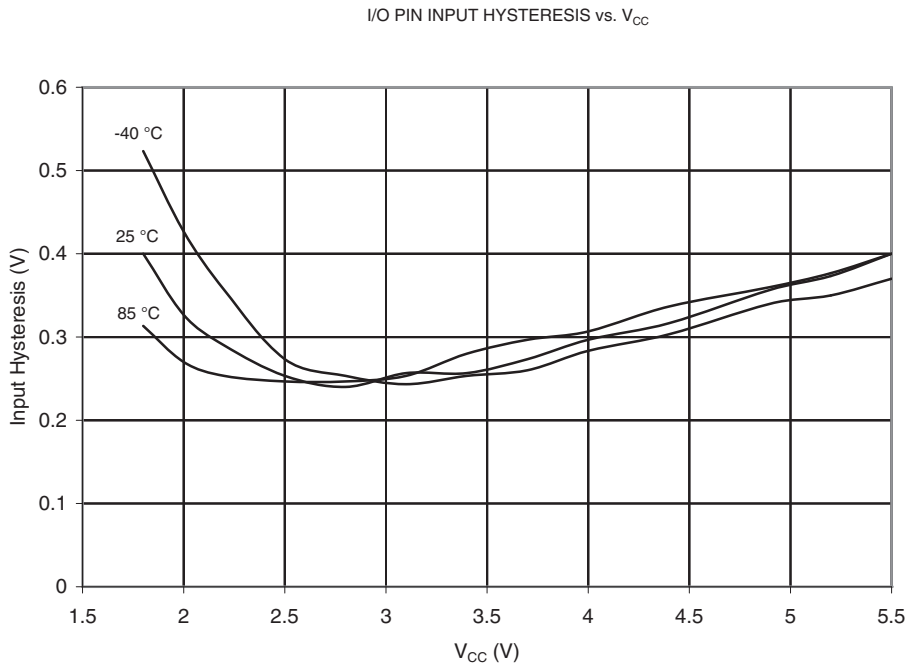

Figure 19-48. V_{IH}: Input Threshold Voltage vs. V_{CC} (Reset Pin as I/O, Read as '1')

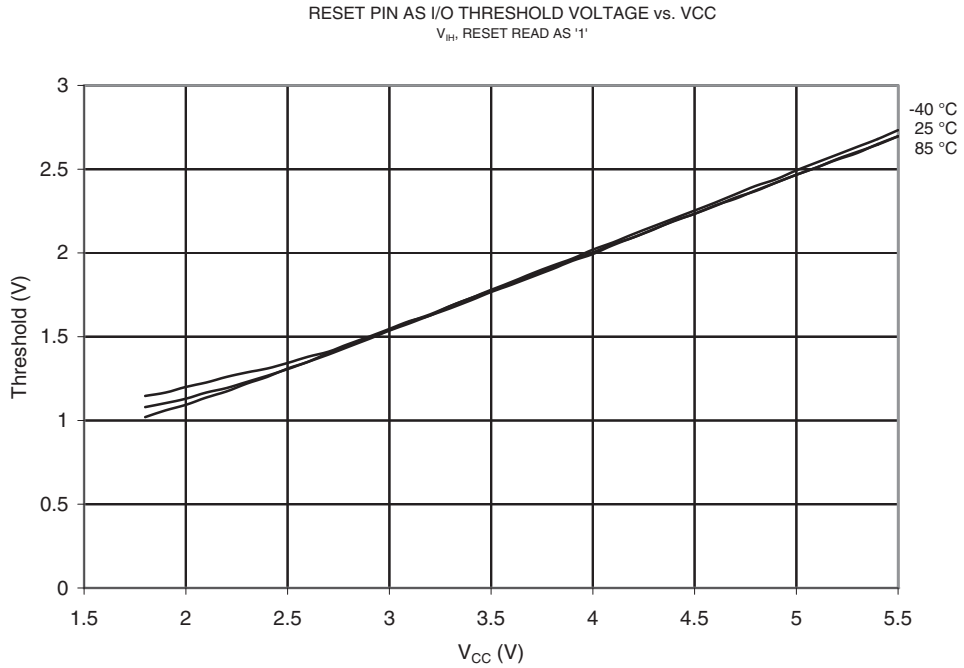

Figure 19-49. V_{IL}: Input Threshold Voltage vs. V_{CC} (Reset Pin as I/O, Read as '0')

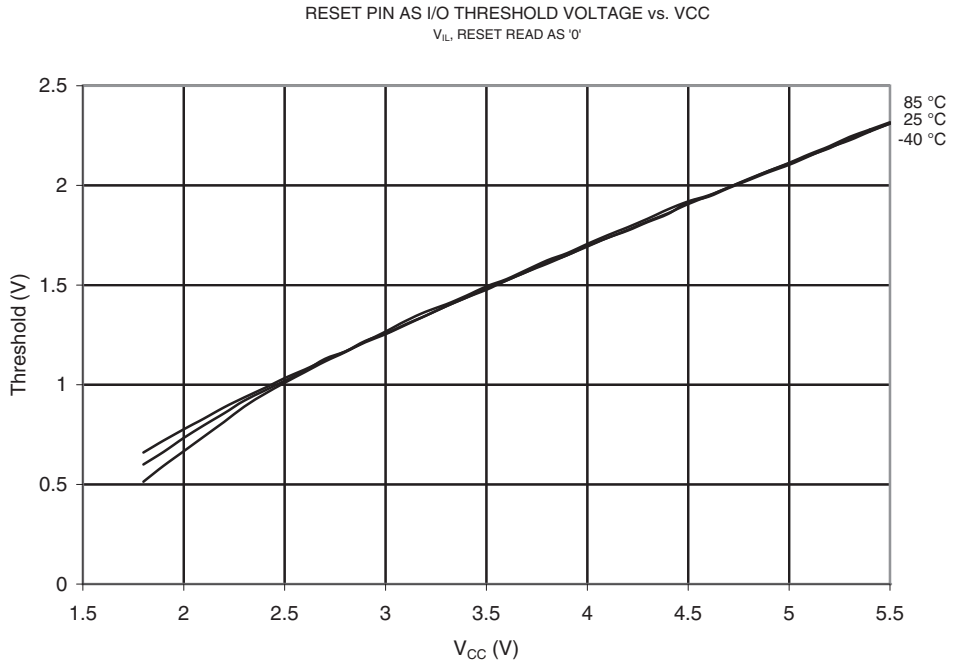

Figure 19-50. V_{IH}-V_{IL}: Input Hysteresis vs. V_{CC} (Reset Pin as I/O)

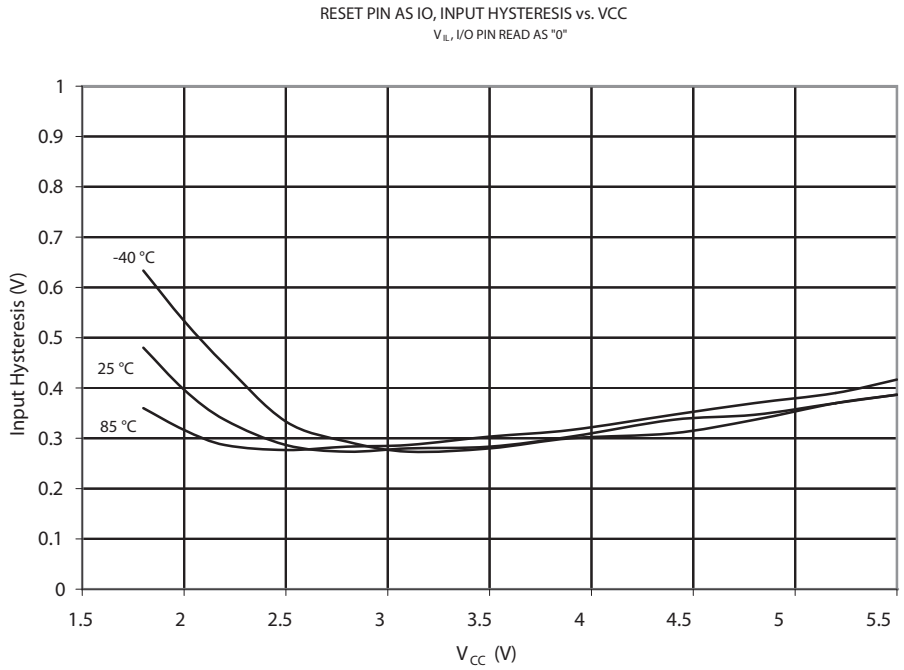

19.11 BOD, Bandgap and Reset

Figure 19-51. BOD Thresholds vs. Temperature (BODLEVEL is 4.3V)

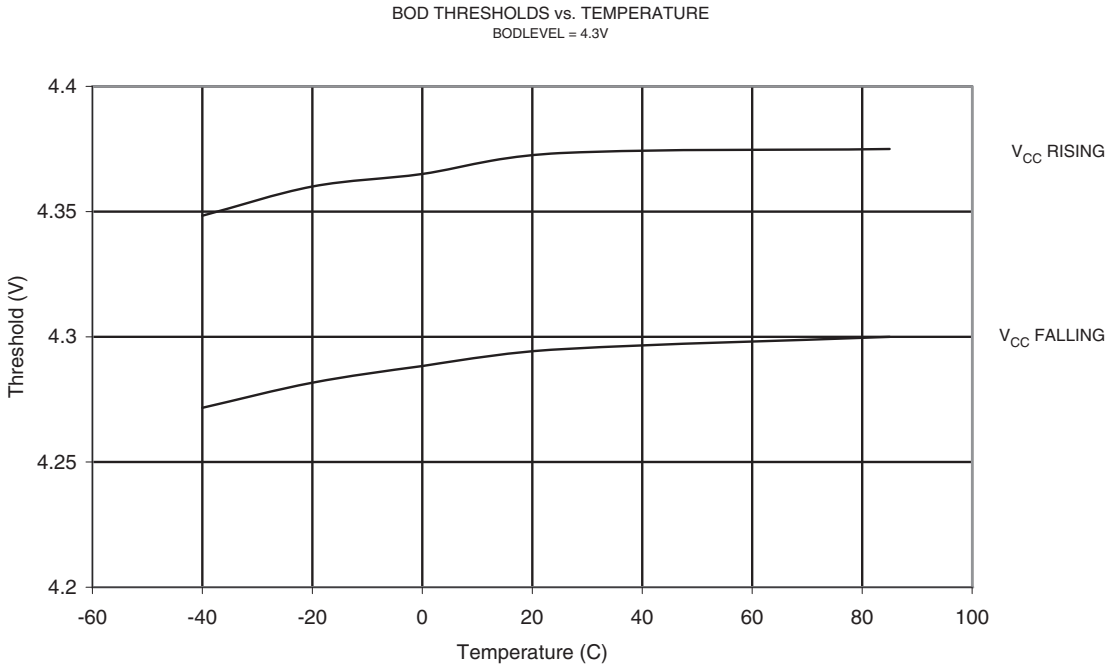

Figure 19-52. BOD Thresholds vs. Temperature (BODLEVEL is 2.7V)

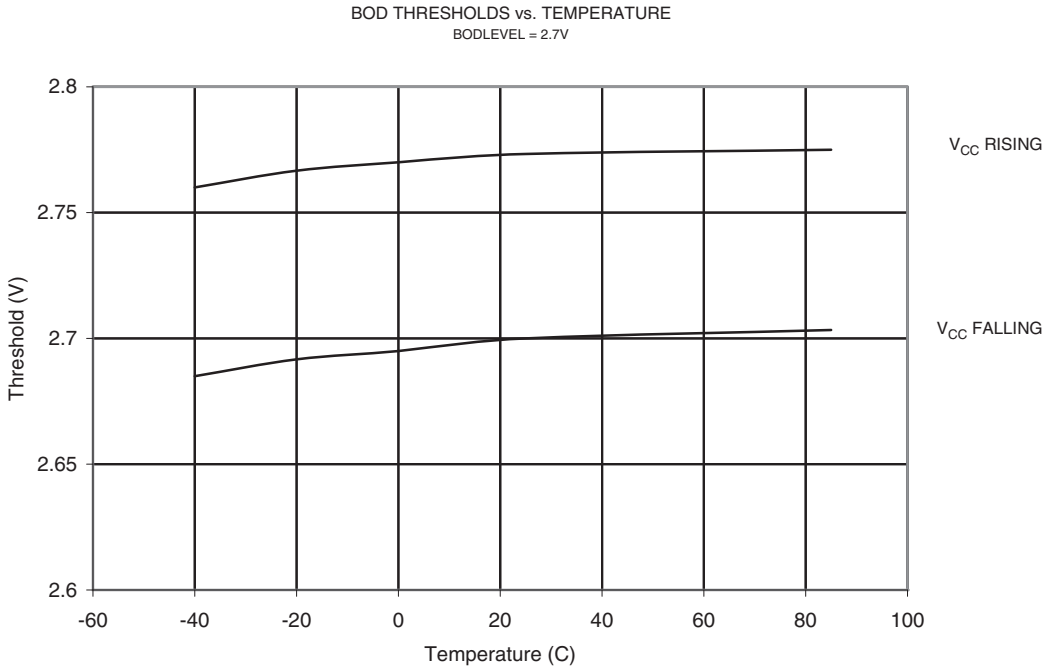

Figure 19-53. BOD Thresholds vs. Temperature (BODLEVEL is 1.8V)

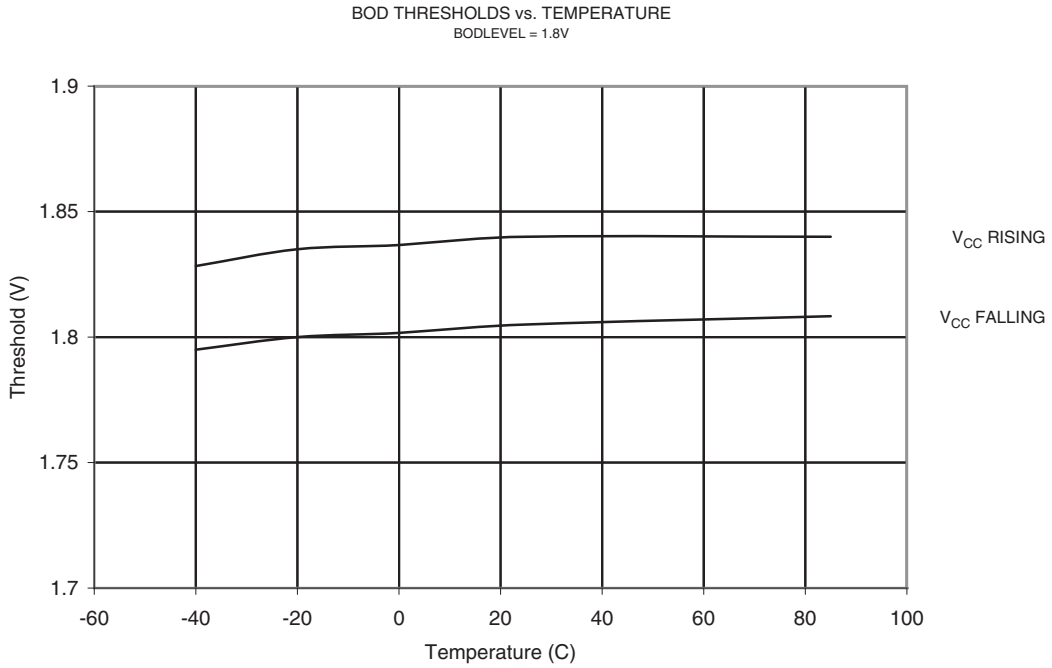

Figure 19-54. Bandgap Voltage vs. V_{CC}

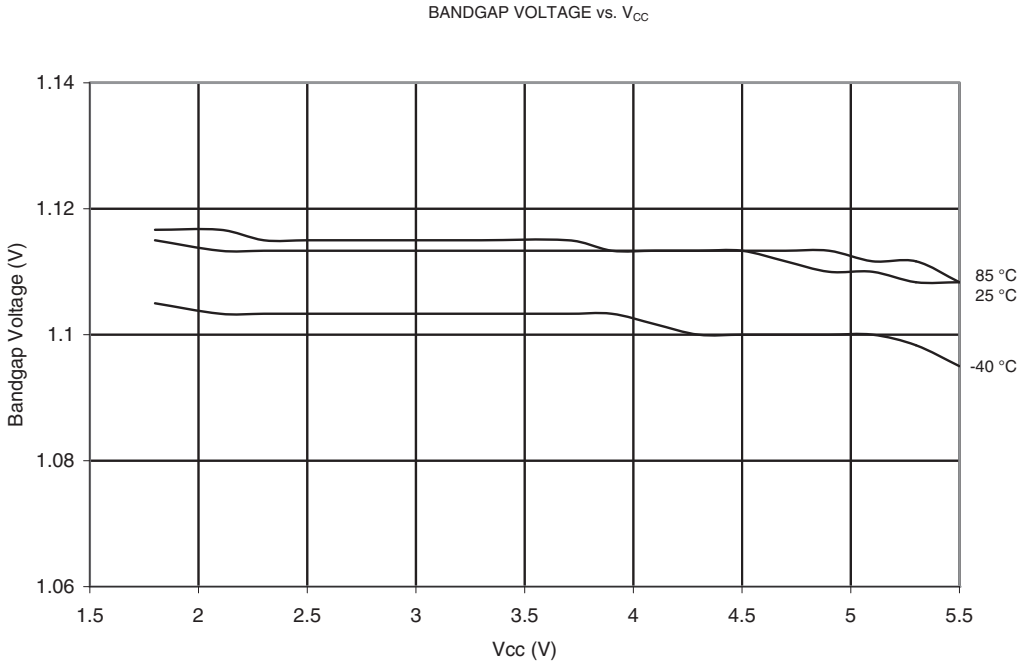

Figure 19-55. V_{IH}: Reset Input Threshold Voltage vs. V_{CC} (Reset Pin Read as '1')

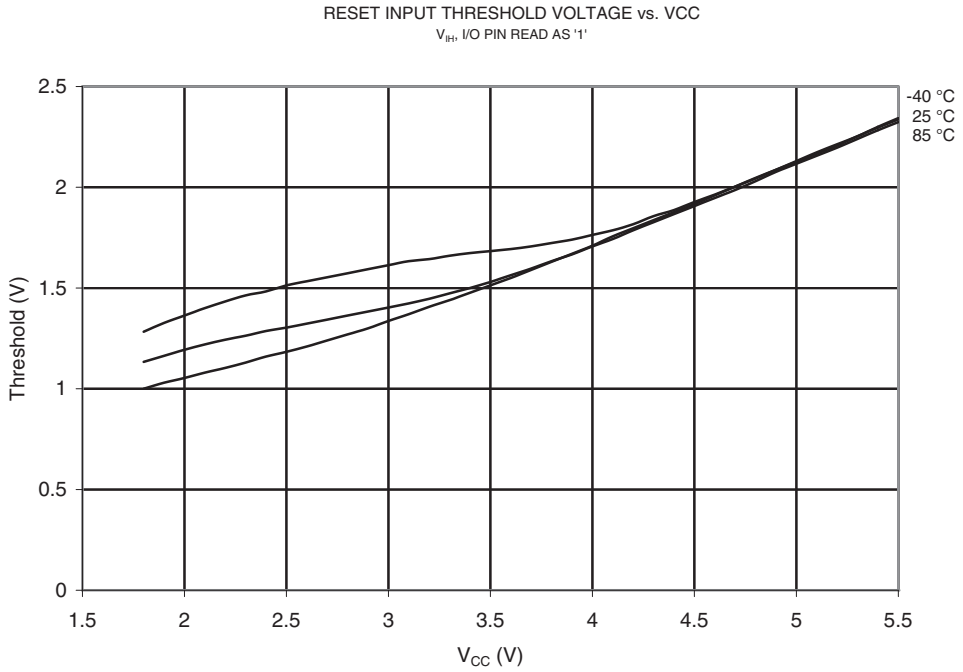

Figure 19-56. V_{IL}: Reset Input Threshold Voltage vs. V_{CC} (Reset Pin Read as '0')

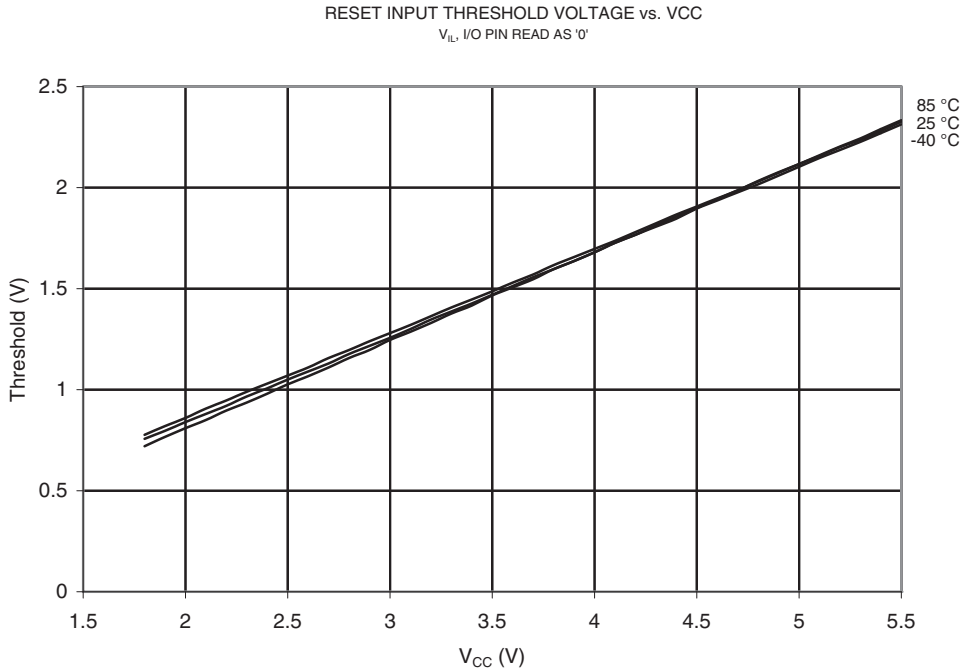

Figure 19-57. V_{IH}-V_{IL}: Reset Input Pin Hysteresis vs. V_{CC}

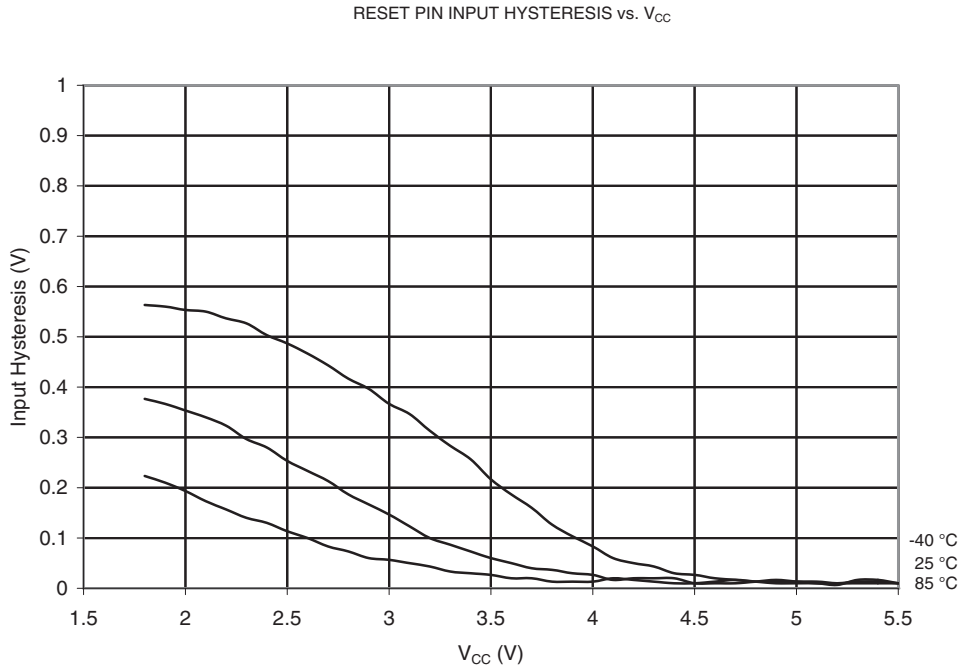

Figure 19-58. Minimum Reset Pulse Width vs. V_{CC}

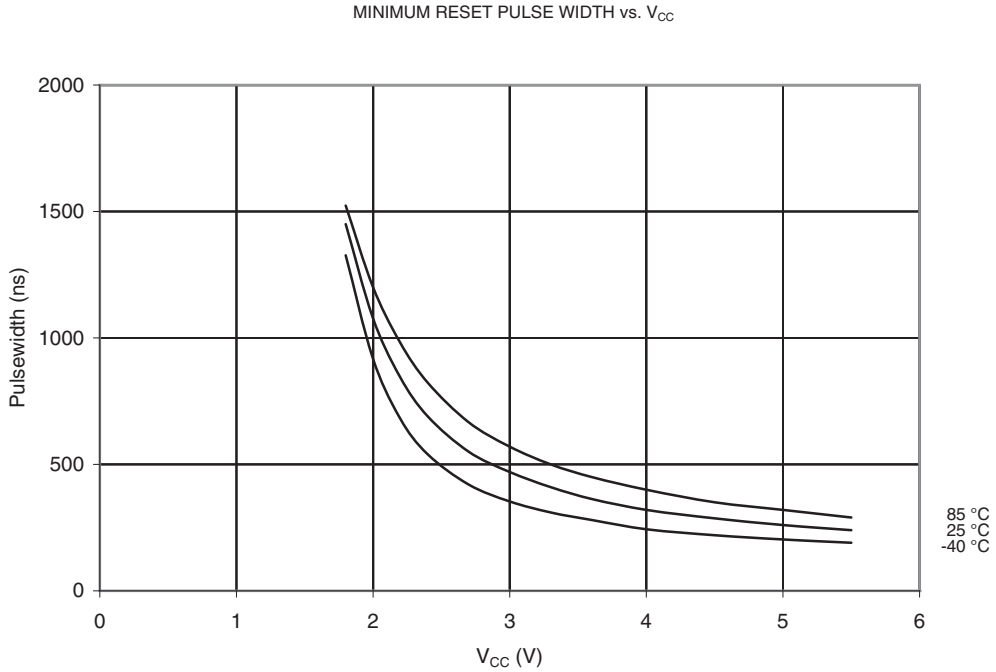

19.12 Internal Oscillator Speed

Figure 19-59. Calibrated 9.6 MHz RC Oscillator Frequency vs. Temperature

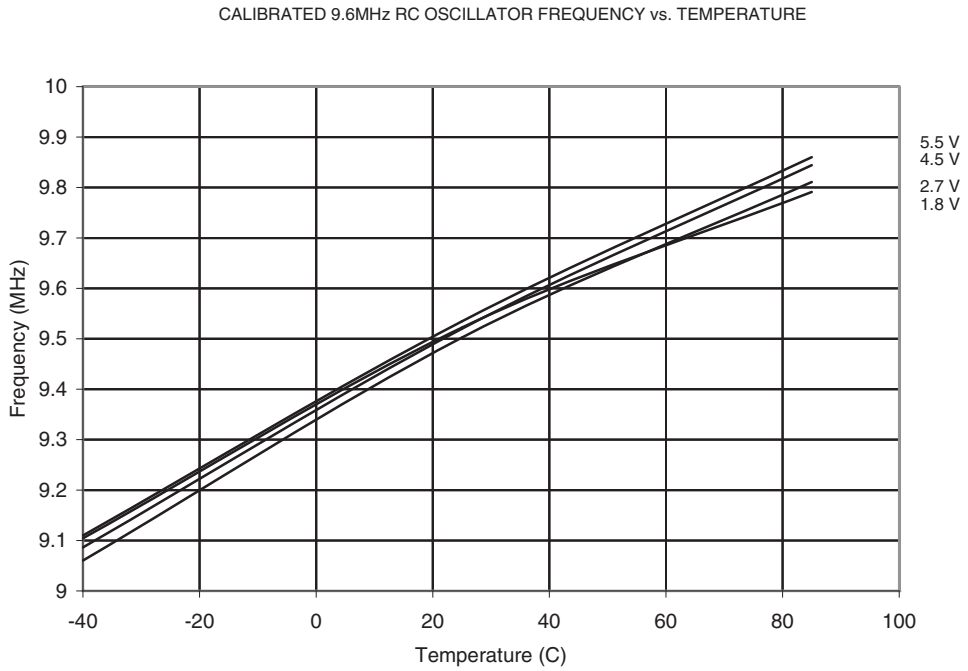

Figure 19-60. Calibrated 9.6 MHz RC Oscillator Frequency vs. V_{CC}

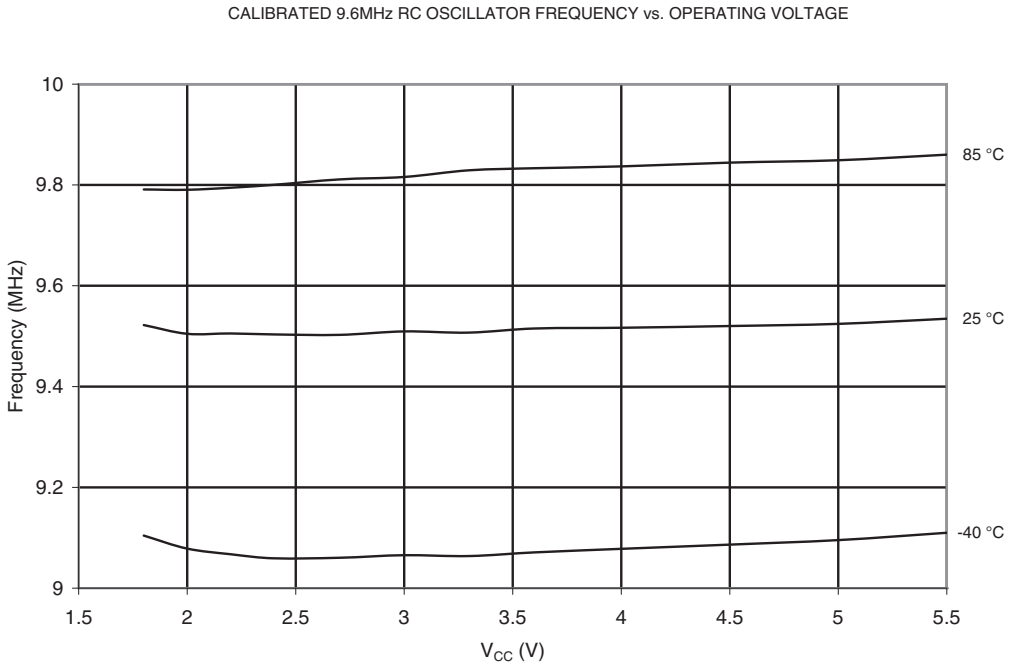

Figure 19-61. Calibrated 9.6 MHz RC Oscillator Frequency vs. Osccal Value

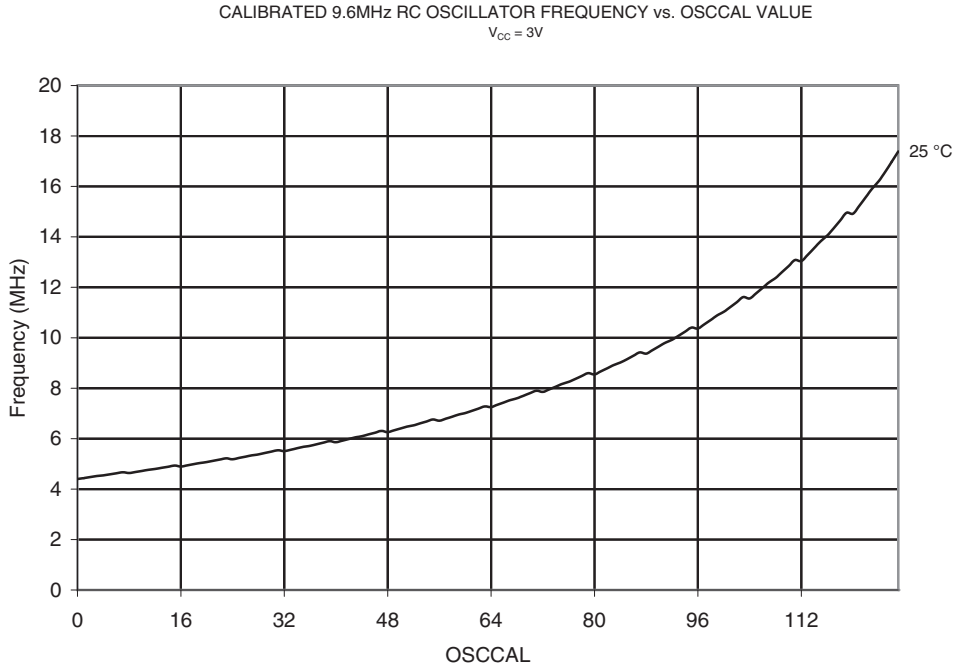

Figure 19-62. Calibrated 4.8 MHz RC Oscillator Frequency vs. Temperature

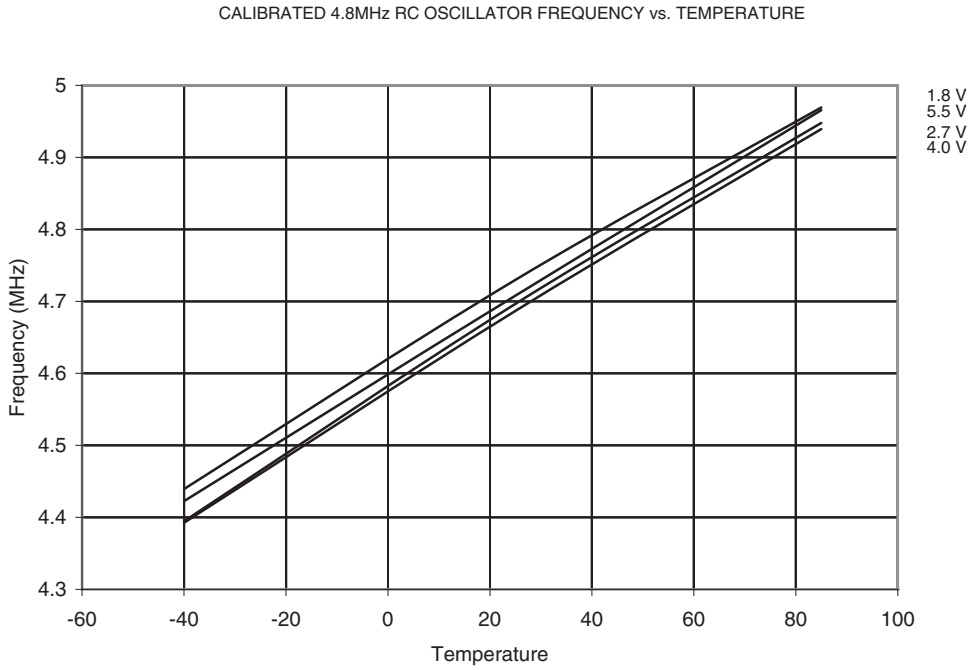

Figure 19-63. Calibrated 4.8 MHz RC Oscillator Frequency vs. V_{CC}

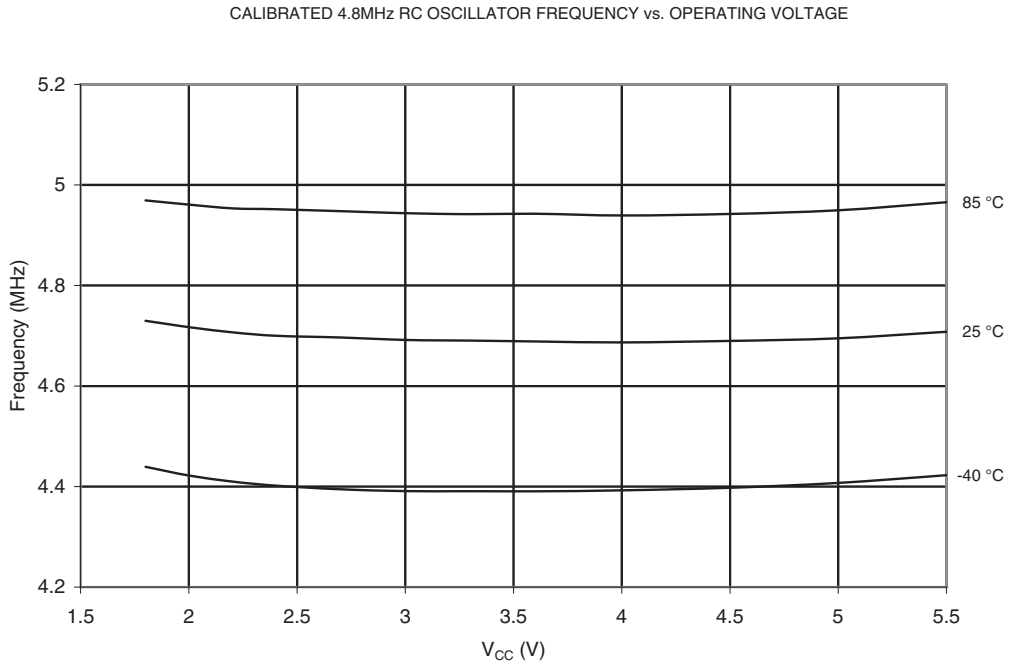

Figure 19-64. Calibrated 4.8 MHz RC Oscillator Frequency vs. Osccal Value

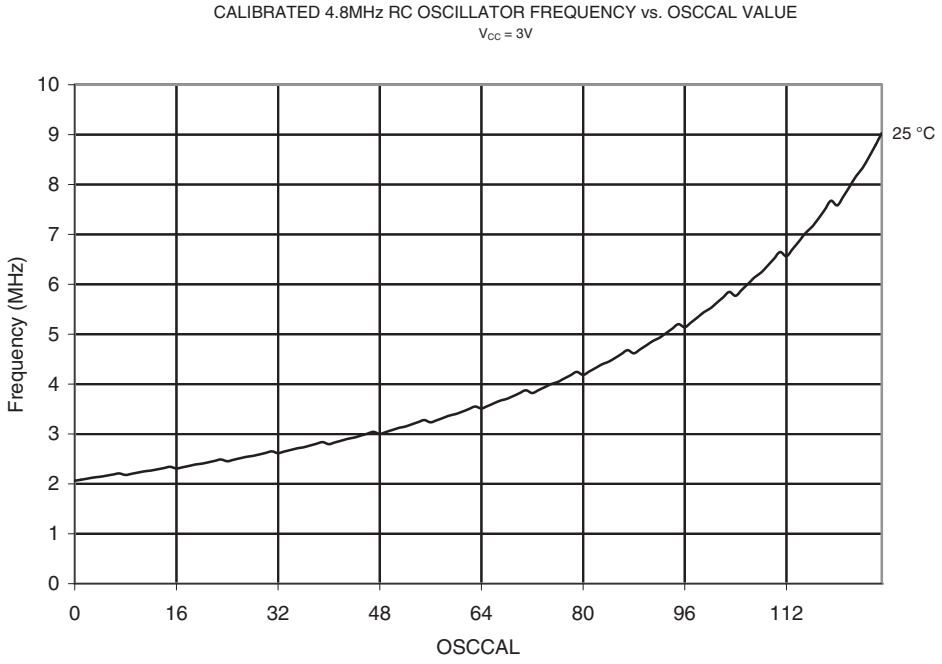

Figure 19-65. 128 kHz Watchdog Oscillator Frequency vs. V_{CC}

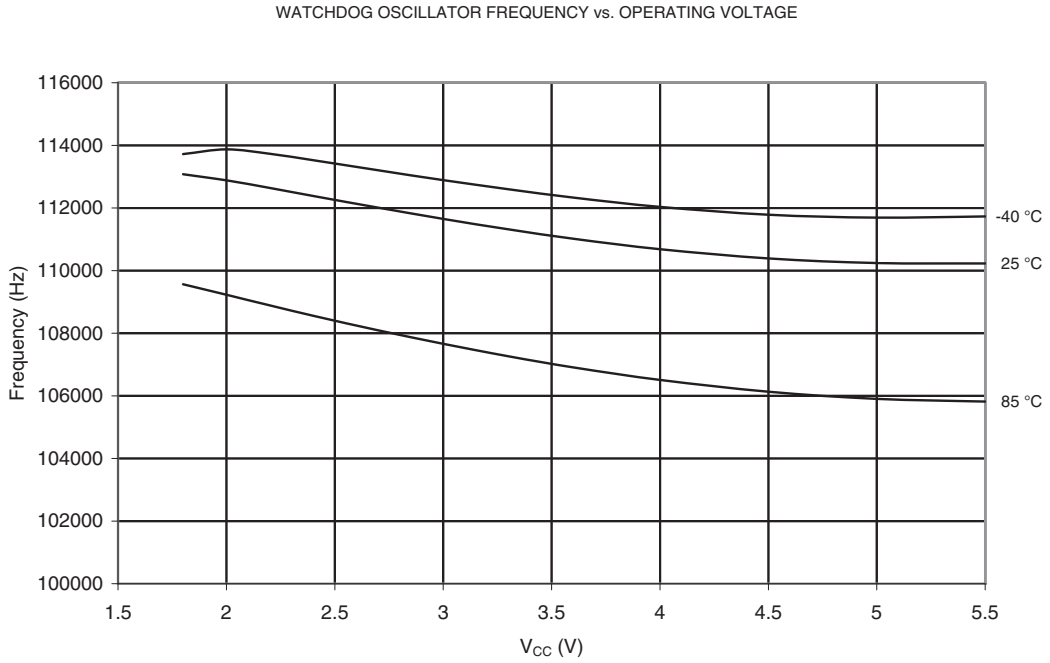

Figure 19-66. 128 kHz Watchdog Oscillator Frequency vs. Temperature

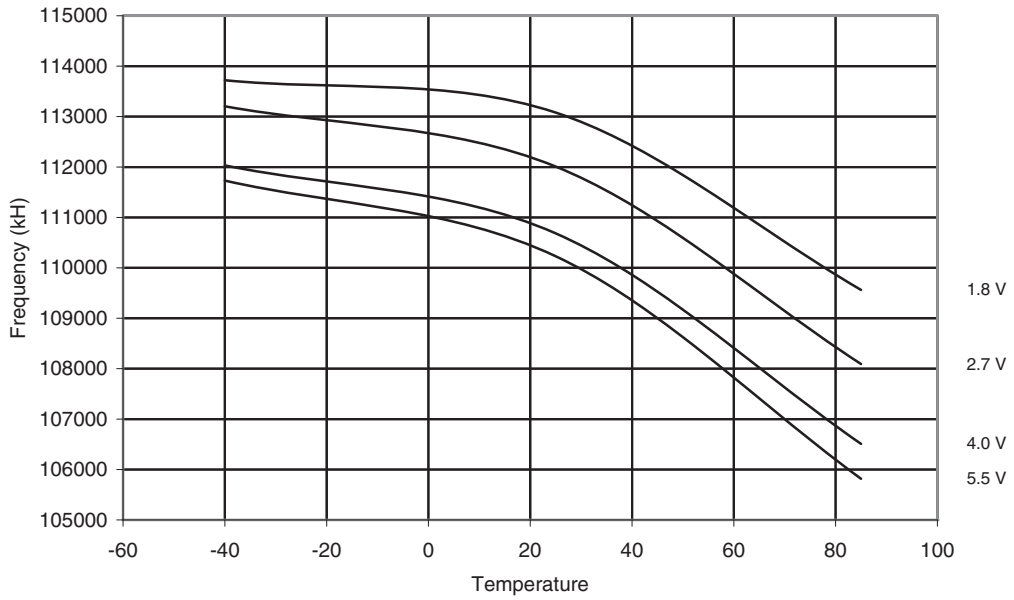

20. Register Summary

Address	Name	Bit 7	Bit 6	Bit 5	Bit 4	Bit 3	Bit 2	Bit 1	Bit 0	Page
0x3F	SREG	I	T	H	S	V	N	Z	C	page 9
0x3E	Reserved	–	–	–	–	–	–	–	–	
0x3D	SPL	SP[7:0]								page 11
0x3C	Reserved	–	–	–	–	–	–	–	–	
0x3B	GIMSK	–	INT0	PCIE	–	–	–	–	–	page 47
0x3A	GIFR	–	INTF0	PCIF	–	–	–	–	–	page 48
0x39	TIMSK0	–	–	–	–	OCIE0B	OCIE0A	TOIE0	–	page 75
0x38	TIFR0	–	–	–	–	OCF0B	OCF0A	TOV0	–	page 76
0x37	SPMCSR	–	–	–	CTPB	RFLB	PGWRT	PGERS	SELFPR-	page 98
0x36	OCR0A	Timer/Counter – Output Compare Register A								page 75
0x35	MCUCR	–	PUD	SE	SM1	SM0	–	ISC01	ISC00	pages 33, 47, 57
0x34	MCUSR	–	–	–	–	WDRF	BORF	EXTRF	PORF	page 42
0x33	TCCR0B	FOC0A	FOC0B	–	–	WGM02	CS02	CS01	CS00	page 73
0x32	TCNT0	Timer/Counter (8-bit)								page 74
0x31	OSCCAL	Oscillator Calibration Register								page 27
0x30	BODCR	–	–	–	–	–	–	BODS	BODSE	page 33
0x2F	TCCR0A	COM0A1	COM0A0	COM0B1	COM0B0	–	–	WGM01	WGM00	page 70
0x2E	DWDR	DWDR[7:0]								page 97
0x2D	Reserved	–								
0x2C	Reserved	–								
0x2B	Reserved	–								
0x2A	Reserved	–								
0x29	OCR0B	Timer/Counter – Output Compare Register B								page 75
0x28	GTCCR	TSM	–	–	–	–	–	–	PSR10	page 78
0x27	Reserved	–								
0x26	CLKPR	CLKPCE	–	–	–	CLKPS3	CLKPS2	CLKPS1	CLKPS0	page 28
0x25	PRR	–	–	–	–	–	–	PRTIM0	PRADC	page 34
0x24	Reserved	–								
0x23	Reserved	–								
0x22	Reserved	–								
0x21	WDTCR	WDTIF	WDTIE	WDP3	WDCE	WDE	WDP2	WDP1	WDP0	page 42
0x20	Reserved	–								
0x1F	Reserved	–								
0x1E	EEARL	–	–	EEPROM Address Register						page 20
0x1D	EEDR	EEPROM Data Register								page 20
0x1C	EECR	–	–	EEPM1	EEPM0	EERIE	EEMPE	EEPE	EERE	page 21
0x1B	Reserved	–								
0x1A	Reserved	–								
0x19	Reserved	–								
0x18	PORTB	–	–	PORTB5	PORTB4	PORTB3	PORTB2	PORTB1	PORTB0	page 57
0x17	DDRB	–	–	DDB5	DDB4	DDB3	DDB2	DDB1	DDB0	page 57
0x16	PINB	–	–	PINB5	PINB4	PINB3	PINB2	PINB1	PINB0	page 58
0x15	PCMSK	–	–	PCINT5	PCINT4	PCINT3	PCINT2	PCINT1	PCINT0	page 48
0x14	DIDR0	–	–	ADC0D	ADC2D	ADC3D	ADC1D	AIN1D	AIN0D	pages 81, 95
0x13	Reserved	–								
0x12	Reserved	–								
0x11	Reserved	–								
0x10	Reserved	–								
0x0F	Reserved	–								
0x0E	Reserved	–								
0x0D	Reserved	–								
0x0C	Reserved	–								
0x0B	Reserved	–								
0x0A	Reserved	–								
0x09	Reserved	–								
0x08	ACSR	ACD	ACBG	ACO	ACI	ACIE	–	ACIS1	ACIS0	page 80
0x07	ADMUX	–	REFS0	ADLAR	–	–	–	MUX1	MUX0	page 92
0x06	ADCSRA	ADEN	ADSC	ADATE	ADIF	ADIE	ADPS2	ADPS1	ADPS0	page 93
0x05	ADCH	ADC Data Register High Byte								page 94
0x04	ADCL	ADC Data Register Low Byte								page 94
0x03	ADCSRB	–	ACME	–	–	–	ADTS2	ADTS1	ADTS0	pages 80, 95
0x02	Reserved	–								
0x01	Reserved	–								
0x00	Reserved	–								

Notes: 1. For compatibility with future devices, reserved bits should be written to zero if accessed. Reserved I/O memory addresses should never be written.

2. I/O Registers within the address range 0x00 - 0x1F are directly bit-accessible using the SBI and CBI instructions. In these registers, the value of single bits can be checked by using the SBIS and SBIC instructions.ome of the Status Flags are cleared by writing a logical one to them. Note that, unlike most other AVRs, the CBI and SBI instructions will only operation the specified bit, and can therefore be used on registers containing such Status Flags. The CBI and SBI instructions work with registers 0x00 to 0x1F only.

21. Instruction Set Summary

Mnemonics	Operands	Description	Operation	Flags	#Clocks
ARITHMETIC AND LOGIC INSTRUCTIONS					
ADD	Rd, Rr	Add two Registers	Rd ← Rd + Rr	Z,C,N,V,H	1
ADC	Rd, Rr	Add with Carry two Registers	Rd ← Rd + Rr + C	Z,C,N,V,H	1
ADIW	Rdl,K	Add Immediate to Word	Rdh:Rdl ← Rdh:Rdl + K	Z,C,N,V,S	2
SUB	Rd, Rr	Subtract two Registers	Rd ← Rd - Rr	Z,C,N,V,H	1
SUBI	Rd, K	Subtract Constant from Register	Rd ← Rd - K	Z,C,N,V,H	1
SBC	Rd, Rr	Subtract with Carry two Registers	Rd ← Rd - Rr - C	Z,C,N,V,H	1
SBCI	Rd, K	Subtract with Carry Constant from Reg.	Rd ← Rd - K - C	Z,C,N,V,H	1
SBIW	Rdl,K	Subtract Immediate from Word	Rdh:Rdl ← Rdh:Rdl - K	Z,C,N,V,S	2
AND	Rd, Rr	Logical AND Registers	Rd ← Rd • Rr	Z,N,V	1
ANDI	Rd, K	Logical AND Register and Constant	Rd ← Rd • K	Z,N,V	1
OR	Rd, Rr	Logical OR Registers	Rd ← Rd v Rr	Z,N,V	1
ORI	Rd, K	Logical OR Register and Constant	Rd ← Rd v K	Z,N,V	1
EOR	Rd, Rr	Exclusive OR Registers	Rd ← Rd ⊕ Rr	Z,N,V	1
COM	Rd	One's Complement	Rd ← 0xFF − Rd	Z,C,N,V	1
NEG	Rd	Two's Complement	Rd ← 0x00 − Rd	Z,C,N,V,H	1
SBR	Rd,K	Set Bit(s) in Register	Rd ← Rd v K	Z,N,V	1
CBR	Rd,K	Clear Bit(s) in Register	Rd ← Rd • (0xFF - K)	Z,N,V	1
INC	Rd	Increment	Rd ← Rd + 1	Z,N,V	1
DEC	Rd	Decrement	Rd ← Rd − 1	Z,N,V	1
TST	Rd	Test for Zero or Minus	Rd ← Rd • Rd	Z,N,V	1
CLR	Rd	Clear Register	Rd ← Rd ⊕ Rd	Z,N,V	1
SER	Rd	Set Register	Rd ← 0xFF	None	1
BRANCH INSTRUCTIONS					
RJMP	k	Relative Jump	PC ← PC + k + 1	None	2
IJMP		Indirect Jump to (Z)	PC ← Z	None	2
RCALL	k	Relative Subroutine Call	PC ← PC + k + 1	None	3
ICALL		Indirect Call to (Z)	PC ← Z	None	3
RET		Subroutine Return	PC ← STACK	None	4
RETI		Interrupt Return	PC ← STACK	I	4
CPSE	Rd,Rr	Compare, Skip if Equal	if (Rd = Rr) PC ← PC + 2 or 3	None	1/2/3
CP	Rd,Rr	Compare	Rd − Rr	Z, N,V,C,H	1
CPC	Rd,Rr	Compare with Carry	Rd − Rr − C	Z, N,V,C,H	1
CPI	Rd,K	Compare Register with Immediate	Rd − K	Z, N,V,C,H	1
SBRC	Rr, b	Skip if Bit in Register Cleared	if (Rr(b)=0) PC ← PC + 2 or 3	None	1/2/3
SBRS	Rr, b	Skip if Bit in Register is Set	if (Rr(b)=1) PC ← PC + 2 or 3	None	1/2/3
SBIC	P, b	Skip if Bit in I/O Register Cleared	if (P(b)=0) PC ← PC + 2 or 3	None	1/2/3
SBIS	P, b	Skip if Bit in I/O Register is Set	if (P(b)=1) PC ← PC + 2 or 3	None	1/2/3
BRBS	s, k	Branch if Status Flag Set	if (SREG(s) = 1) then PC←PC+k + 1	None	1/2
BRBC	s, k	Branch if Status Flag Cleared	if (SREG(s) = 0) then PC←PC+k + 1	None	1/2
BREQ	k	Branch if Equal	if (Z = 1) then PC ← PC + k + 1	None	1/2
BRNE	k	Branch if Not Equal	if (Z = 0) then PC ← PC + k + 1	None	1/2
BRCS	k	Branch if Carry Set	if (C = 1) then PC ← PC + k + 1	None	1/2
BRCC	k	Branch if Carry Cleared	if (C = 0) then PC ← PC + k + 1	None	1/2
BRSH	k	Branch if Same or Higher	if (C = 0) then PC ← PC + k + 1	None	1/2
BRLO	k	Branch if Lower	if (C = 1) then PC ← PC + k + 1	None	1/2
BRMI	k	Branch if Minus	if (N = 1) then PC ← PC + k + 1	None	1/2
BRPL	k	Branch if Plus	if (N = 0) then PC ← PC + k + 1	None	1/2
BRGE	k	Branch if Greater or Equal, Signed	if (N ⊕ V= 0) then PC ← PC + k + 1	None	1/2
BRLT	k	Branch if Less Than Zero, Signed	if (N ⊕ V= 1) then PC ← PC + k + 1	None	1/2
BRHS	k	Branch if Half Carry Flag Set	if (H = 1) then PC ← PC + k + 1	None	1/2
BRHC	k	Branch if Half Carry Flag Cleared	if (H = 0) then PC ← PC + k + 1	None	1/2
BRTS	k	Branch if T Flag Set	if (T = 1) then PC ← PC + k + 1	None	1/2
BRTC	k	Branch if T Flag Cleared	if (T = 0) then PC ← PC + k + 1	None	1/2
BRVS	k	Branch if Overflow Flag is Set	if (V = 1) then PC ← PC + k + 1	None	1/2
BRVC	k	Branch if Overflow Flag is Cleared	if (V = 0) then PC ← PC + k + 1	None	1/2
BRIE	k	Branch if Interrupt Enabled	if (I = 1) then PC ← PC + k + 1	None	1/2
BRID	k	Branch if Interrupt Disabled	if (I = 0) then PC ← PC + k + 1	None	1/2
BIT AND BIT-TEST INSTRUCTIONS					
SBI	P,b	Set Bit in I/O Register	I/O(P,b) ← 1	None	2
CBI	P,b	Clear Bit in I/O Register	I/O(P,b) ← 0	None	2
LSL	Rd	Logical Shift Left	Rd(n+1) ← Rd(n), Rd(0) ← 0	Z,C,N,V	1
LSR	Rd	Logical Shift Right	Rd(n) ← Rd(n+1), Rd(7) ← 0	Z,C,N,V	1
ROL	Rd	Rotate Left Through Carry	Rd(0)←C,Rd(n+1)← Rd(n),C←Rd(7)	Z,C,N,V	1

Mnemonics	Operands	Description	Operation	Flags	#Clocks
ROR	Rd	Rotate Right Through Carry	Rd(7)←C,Rd(n)← Rd(n+1),C←Rd(0)	Z,C,N,V	1
ASR	Rd	Arithmetic Shift Right	Rd(n) ← Rd(n+1), n=0..6	Z,C,N,V	1
SWAP	Rd	Swap Nibbles	Rd(3..0)←Rd(7..4),Rd(7..4)←Rd(3..0)	None	1
BSET	s	Flag Set	SREG(s) ← 1	SREG(s)	1
BCLR	s	Flag Clear	SREG(s) ← 0	SREG(s)	1
BST	Rr, b	Bit Store from Register to T	T ← Rr(b)	T	1
BLD	Rd, b	Bit load from T to Register	Rd(b) ← T	None	1
SEC		Set Carry	C ← 1	C	1
CLC		Clear Carry	C ← 0	C	1
SEN		Set Negative Flag	N ← 1	N	1
CLN		Clear Negative Flag	N ← 0	N	1
SEZ		Set Zero Flag	Z ← 1	Z	1
CLZ		Clear Zero Flag	Z ← 0	Z	1
SEI		Global Interrupt Enable	I ← 1	I	1
CLI		Global Interrupt Disable	I ← 0	I	1
SES		Set Signed Test Flag	S ← 1	S	1
CLS		Clear Signed Test Flag	S ← 0	S	1
SEV		Set Twos Complement Overflow.	V ← 1	V	1
CLV		Clear Twos Complement Overflow	V ← 0	V	1
SET		Set T in SREG	T ← 1	T	1
CLT		Clear T in SREG	T ← 0	T	1
SEH		Set Half Carry Flag in SREG	H ← 1	H	1
CLH		Clear Half Carry Flag in SREG	H ← 0	H	1
DATA TRANSFER INSTRUCTIONS					
MOV	Rd, Rr	Move Between Registers	Rd ← Rr	None	1
MOVW	Rd, Rr	Copy Register Word	Rd+1:Rd ← Rr+1:Rr	None	1
LDI	Rd, K	Load Immediate	Rd ← K	None	1
LD	Rd, X	Load Indirect	Rd ← (X)	None	2
LD	Rd, X+	Load Indirect and Post-Inc.	Rd ← (X), X ← X + 1	None	2
LD	Rd, - X	Load Indirect and Pre-Dec.	X ← X - 1, Rd ← (X)	None	2
LD	Rd, Y	Load Indirect	Rd ← (Y)	None	2
LD	Rd, Y+	Load Indirect and Post-Inc.	Rd ← (Y), Y ← Y + 1	None	2
LD	Rd, - Y	Load Indirect and Pre-Dec.	Y ← Y - 1, Rd ← (Y)	None	2
LDD	Rd,Y+q	Load Indirect with Displacement	Rd ← (Y + q)	None	2
LD	Rd, Z	Load Indirect	Rd ← (Z)	None	2
LD	Rd, Z+	Load Indirect and Post-Inc.	Rd ← (Z), Z ← Z+1	None	2
LD	Rd, -Z	Load Indirect and Pre-Dec.	Z ← Z - 1, Rd ← (Z)	None	2
LDD	Rd, Z+q	Load Indirect with Displacement	Rd ← (Z + q)	None	2
LDS	Rd, k	Load Direct from SRAM	Rd ← (k)	None	2
ST	X, Rr	Store Indirect	(X) ← Rr	None	2
ST	X+, Rr	Store Indirect and Post-Inc.	(X) ← Rr, X ← X + 1	None	2
ST	- X, Rr	Store Indirect and Pre-Dec.	X ← X - 1, (X) ← Rr	None	2
ST	Y, Rr	Store Indirect	(Y) ← Rr	None	2
ST	Y+, Rr	Store Indirect and Post-Inc.	(Y) ← Rr, Y ← Y + 1	None	2
ST	- Y, Rr	Store Indirect and Pre-Dec.	Y ← Y - 1, (Y) ← Rr	None	2
STD	Y+q,Rr	Store Indirect with Displacement	(Y + q) ← Rr	None	2
ST	Z, Rr	Store Indirect	(Z) ← Rr	None	2
ST	Z+, Rr	Store Indirect and Post-Inc.	(Z) ← Rr, Z ← Z + 1	None	2
ST	-Z, Rr	Store Indirect and Pre-Dec.	Z ← Z - 1, (Z) ← Rr	None	2
STD	Z+q,Rr	Store Indirect with Displacement	(Z + q) ← Rr	None	2
STS	k, Rr	Store Direct to SRAM	(k) ← Rr	None	2
LPM		Load Program Memory	R0 ← (Z)	None	3
LPM	Rd, Z	Load Program Memory	Rd ← (Z)	None	3
LPM	Rd, Z+	Load Program Memory and Post-Inc	Rd ← (Z), Z ← Z+1	None	3
SPM		Store Program Memory	(z) ← R1:R0	None	
IN	Rd, P	In Port	Rd ← P	None	1
OUT	P, Rr	Out Port	P ← Rr	None	1
PUSH	Rr	Push Register on Stack	STACK ← Rr	None	2
POP	Rd	Pop Register from Stack	Rd ← STACK	None	2
MCU CONTROL INSTRUCTIONS					
NOP		No Operation		None	1
SLEEP		Sleep	(see specific descr. for Sleep function)	None	1
WDR		Watchdog Reset	(see specific descr. for WDR/Timer)	None	1
BREAK		Break	For On-chip Debug Only	None	N/A

22. Ordering Information

Speed (MHz)	Power Supply (V)	Ordering Code[1]	Package[2]	Operation Range
20	1.8 - 5.5	ATtiny13A-PU ATtiny13A-SU ATtiny13A-SUR ATtiny13A-SH ATtiny13A-SHR ATtiny13A-SSU ATtiny13A-SSUR ATtiny13A-SSH ATtiny13A-SSHR ATtiny13A-MU ATtiny13A-MUR ATtiny13A-MMU[3] ATtiny13A-MMUR[3]	8P3 8S2 8S2 8S2 8S2 8S1 8S1 8S1 8S1 20M1 20M1 10M1[3] 10M1[3]	Industrial (-40°C to +85°C)[4]
		ATtiny13A-SN ATtiny13A-SNR ATtiny13A-SS7 ATtiny13A-SS7R	8S2 8S2 8S1 8S1	Industrial (-40°C to +105°C)[5]
		ATtiny13A-SF ATtiny13A-SFR ATtiny13A-MMF ATtiny13A-MMFR	8S2 8S2 10M1[3] 10M1[3]	Industrial (-40°C to +125°C)[6]

Notes:
1. Code indicators:
   - H or 7: NiPdAu lead finish
   - U, N or F: matte tin
   - R: tape & reel
2. All packages are Pb-free, halide-free and fully green and they comply with the European directive for Restriction of Hazardous Substances (RoHS).
3. Topside marking for ATtiny13A:
   - 1st Line: T13
   - 2nd Line: Axx
   - 3rd Line: xxx
4. These devices can also be supplied in wafer form. Please contact your local Atmel sales office for detailed ordering information and minimum quantities.
5. For typical and Electrical characteristics for this device please consult Appendix A, ATtiny13A Specification at 105°C.
6. For typical and Electrical characteristics for this device please consult Appendix B, ATtiny13A Specification at 125°C.

Package Type	
8P3	8-lead, 0.300" Wide, Plastic Dual Inline Package (PDIP)
8S2	8-lead, 0.209" Wide, Plastic Small Outline Package (EIAJ SOIC)
8S1	8-lead, 0.150" Wide, Plastic Gull-Wing Small Outline (JEDEC SOIC)
20M1	20-pad, 4 x 4 x 0.8 mm Body, Lead Pitch 0.50 mm, Micro Lead Frame Package (MLF)
10M1	10-pad, 3 x 3 x 1 mm Body, Lead Pitch 0.50 mm, Micro Lead Frame Package (MLF)

23. Packaging Information

23.1 8P3

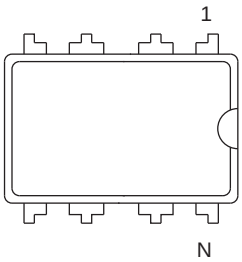

Top View

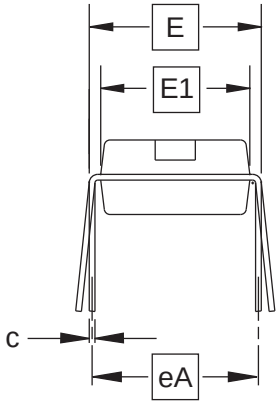

End View

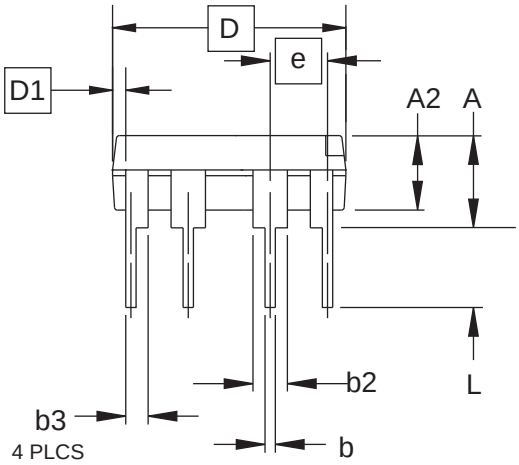

Side View

COMMON DIMENSIONS
(Unit of Measure = inches)

SYMBOL	MIN	NOM	MAX	NOTE
A			0.210	2
A2	0.115	0.130	0.195	
b	0.014	0.018	0.022	5
b2	0.045	0.060	0.070	6
b3	0.030	0.039	0.045	6
c	0.008	0.010	0.014	
D	0.355	0.365	0.400	3
D1	0.005			3
E	0.300	0.310	0.325	4
E1	0.240	0.250	0.280	3
e	0.100 BSC			
eA	0.300 BSC			4
L	0.115	0.130	0.150	2

Notes:
1. This drawing is for general information only; refer to JEDEC Drawing MS-001, Variation BA for additional information.
2. Dimensions A and L are measured with the package seated in JEDEC seating plane Gauge GS-3.
3. D, D1 and E1 dimensions do not include mold Flash or protrusions. Mold Flash or protrusions shall not exceed 0.010 inch.
4. E and eA measured with the leads constrained to be perpendicular to datum.
5. Pointed or rounded lead tips are preferred to ease insertion.
6. b2 and b3 maximum dimensions do not include Dambar protrusions. Dambar protrusions shall not exceed 0.010 (0.25 mm).

01/09/02

2325 Orchard Parkway San Jose, CA 95131	**TITLE** **8P3**, 8-lead, 0.300" Wide Body, Plastic Dual In-line Package (PDIP)	**DRAWING NO.** 8P3	**REV.** B

23.2 8S2

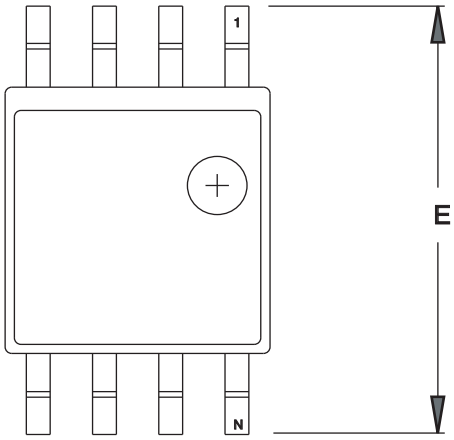

TOP VIEW

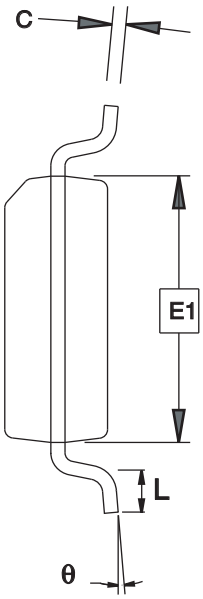

END VIEW

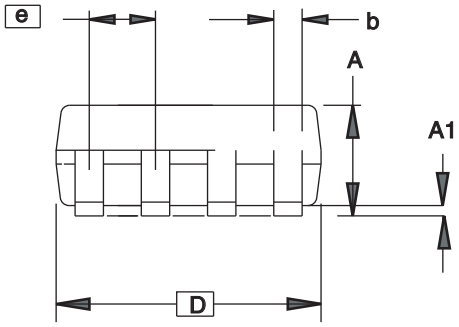

SIDE VIEW

COMMON DIMENSIONS
(Unit of Measure = mm)

SYMBOL	MIN	NOM	MAX	NOTE
A	1.70		2.16	
A1	0.05		0.25	
b	0.35		0.48	4
C	0.15		0.35	4
D	5.13		5.35	
E1	5.18		5.40	2
E	7.70		8.26	
L	0.51		0.85	
θ	0°		8°	
e	1.27 BSC			3

Notes: 1. This drawing is for general information only; refer to EIAJ Drawing EDR-7320 for additional information.
2. Mismatch of the upper and lower dies and resin burrs aren't included.
3. Determines the true geometric position.
4. Values b,C apply to plated terminal. The standard thickness of the plating layer shall measure between 0.007 to .021 mm.

4/15/08

	TITLE	GPC	DRAWING NO.	REV.
Package Drawing Contact: packagedrawings@atmel.com	**8S2,** 8-lead, 0.208” Body, Plastic Small Outline Package (EIAJ)	STN	8S2	F

23.3 8S1

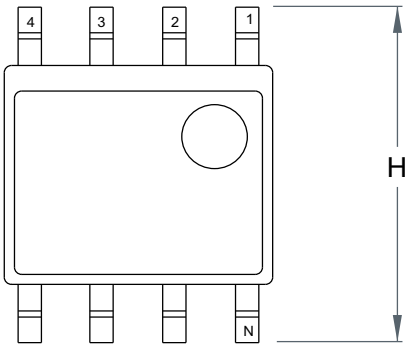

Top View

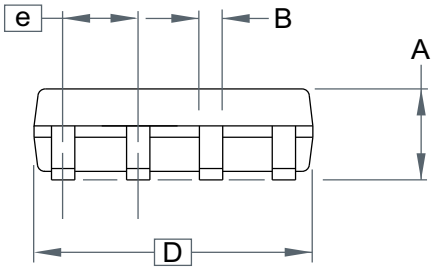

Side View

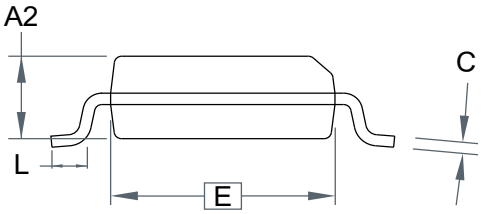

End View

COMMON DIMENSIONS
(Unit of Measure = mm)

SYMBOL	MIN	NOM	MAX	NOTE
A	–	–	1.75	
B	–	–	0.51	
C	–	–	0.25	
D	–	–	5.00	
E	–	–	4.00	
e		1.27 BSC		
H	–	–	6.20	
L	–	–	1.27	

Note: This drawing is for general information only. Refer to JEDEC Drawing MS-012 for proper dimensions, tolerances, datums, etc.

2010-10-20

2325 Orchard Parkway San Jose, CA 95131	**TITLE** **8S1**, 8-lead (0.150" Wide Body), Plastic Gull Wing Small Outline (JEDEC SOIC)	**DRAWING NO.** 8S1	**REV.** B

23.4 20M1

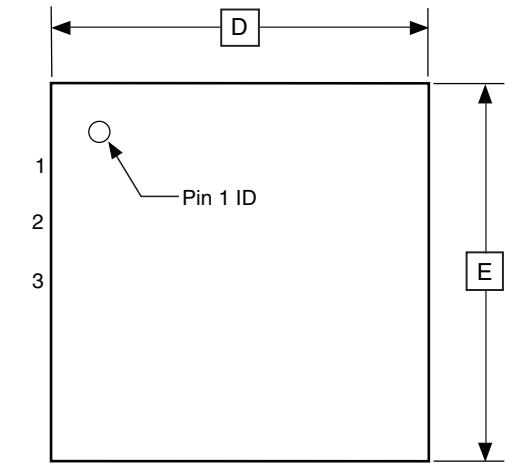

TOP VIEW

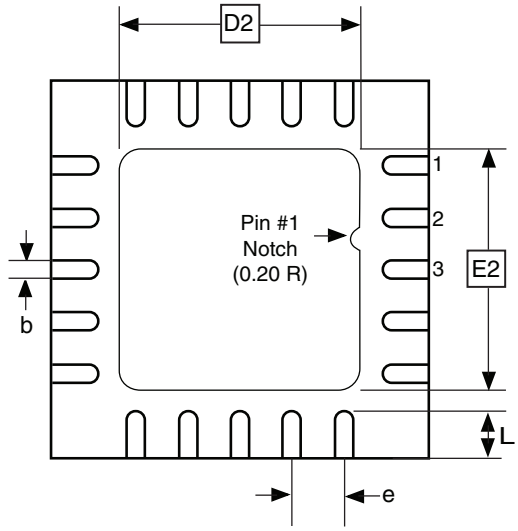

BOTTOM VIEW

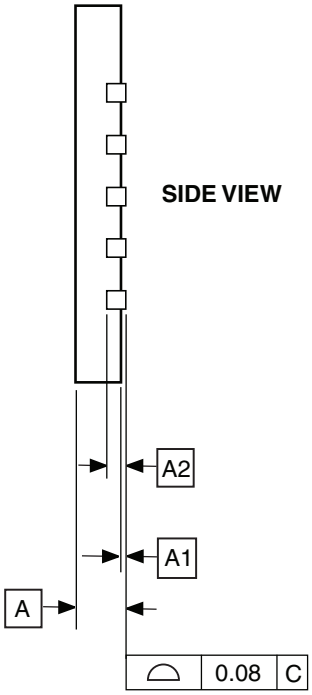

COMMON DIMENSIONS
(Unit of Measure = mm)

SYMBOL	MIN	NOM	MAX	NOTE
A	0.70	0.75	0.80	
A1	–	0.01	0.05	
A2		0.20 REF		
b	0.18	0.23	0.30	
D		4.00 BSC		
D2	2.45	2.60	2.75	
E		4.00 BSC		
E2	2.45	2.60	2.75	
e		0.50 BSC		
L	0.35	0.40	0.55	

Note: Reference JEDEC Standard MO-220, Fig. 1 (SAW Singulation) WGGD-5.

10/27/04

2325 Orchard Parkway San Jose, CA 95131	**TITLE** **20M1**, 20-pad, 4 x 4 x 0.8 mm Body, Lead Pitch 0.50 mm, 2.6 mm Exposed Pad, Micro Lead Frame Package (MLF)	**DRAWING NO.** 20M1	**REV.** B

23.5 10M1

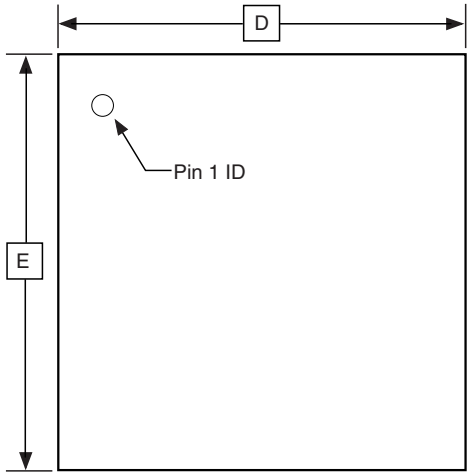

TOP VIEW

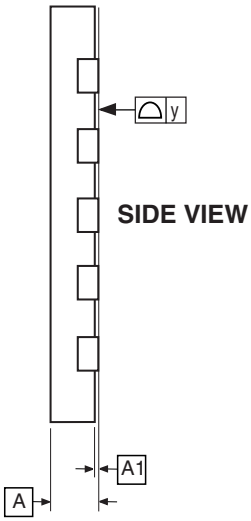

SIDE VIEW

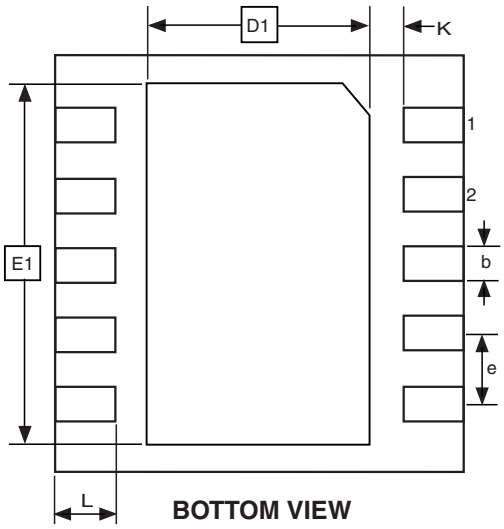

BOTTOM VIEW

COMMON DIMENSIONS
(Unit of Measure = mm)

SYMBOL	MIN	NOM	MAX	NOTE
A	0.80	0.90	1.00	
A1	0.00	0.02	0.05	
b	0.18	0.25	0.30	
D	2.90	3.00	3.10	
D1	1.40	–	1.75	
E	2.90	3.00	3.10	
E1	2.20	–	2.70	
e		0.50		
L	0.30	–	0.50	
y	–	–	0.08	
K	0.20	–	–	

Notes: 1. This package conforms to JEDEC reference MO-229C, Variation VEED-5.
2. The terminal #1 ID is a Lasser-marked Feature.

7/7/06

2325 Orchard Parkway San Jose, CA 95131	**TITLE** **10M1,** 10-pad, 3 x 3 x 1.0 mm Body, Lead Pitch 0.50 mm, 1.64 x 2.60 mm Exposed Pad, Micro Lead Frame Package	**DRAWING NO.** 10M1	**REV.** A

24. Errata

The revision letters in this section refer to the revision of the ATtiny13A device.

24.1 ATtiny13A Rev. G – H

- **EEPROM can not be written below 1.9 Volt**

1. **EEPROM can not be written below 1.9 Volt**

   Writing the EEPROM at V_{CC} below 1.9 volts might fail.

   Problem Fix/Workaround

   Do not write the EEPROM when V_{CC} is below 1.9 volts.

24.2 ATtiny13A Rev. E – F

These device revisions were not sampled.

24.3 ATtiny13 Rev. A – D

These device revisions were referred to as ATtiny13/ATtiny13V.

25. Datasheet Revision History

Please note that page numbers in this section refer to the current version of this document and may not apply to previous versions.

25.1 Rev. 8126F – 05/12

1. Updated Table 10-5 on page 57.
2. Updated order codes on page 162.

25.2 Rev. 8126E – 07/10

1. Updated description in Section 6.4.2 “CLKPR – Clock Prescale Register” on page 28.
2. Adjusted notes in Table 18-1, “DC Characteristics, TA = -40°C to +85°C,” on page 117.
3. Updated plot order in Section 19. “Typical Characteristics” on page 124, added some plots, also some headers and figure titles adjusted.
4. Updated Section 22. “Ordering Information” on page 162, added extended temperature part numbers, as well tape & reel part numbers. Notes adjusted.
5. Updated bit syntax throughout the datasheet, e.g. from CS02:0 to CS0[2:0].

25.3 Rev. 8126D – 11/09

1. Added note “If the RSTDISPL fuse is programmed...” in Startup-up Times Table 6-5 and Table 6-6 on page 26.
2. Added addresses in all Register Description tables and cross-references to Register Summary.
3. Updated naming convention for -COM bits in tables from Table 11-2 on page 70 to Table 11-7 on page 72.
4. Updated value for t_{WD_ERASE} in Table 17-8, “Minimum Wait Delay Before Writing the Next Flash or EEPROM Location,” on page 108.
5. Added NiPdAU note for -SH and -SSH in Section 22. “Ordering Information” on page 162.

25.4 Rev. 8126C – 09/09

1. Added EEPROM errata for rev. G - H on page 168.
2. Added a note about topside marking in Section 22. “Ordering Information” on page 162.

25.5 Rev. 8126B – 11/08

1. Updated order codes on page 162 to reflect changes in material composition.
2. Updated sections:
   – “DIDR0 – Digital Input Disable Register 0” on page 81
   – “DIDR0 – Digital Input Disable Register 0” on page 95
3. Updated “Register Summary” on page 158.

25.6 Rev. 8126A – 05/08

1. Initial revision, created from document 2535I – 04/08.
2. Updated characteristic plots of section “Typical Characteristics” , starting on page 124.
3. Updated “Ordering Information” on page 162.
4. Updated section:

– “Speed” on page 118

5. Update tables:
   – “DC Characteristics, TA = -40°C to +85°C” on page 117
   – “Calibration Accuracy of Internal RC Oscillator” on page 119
   – “Reset, Brown-out, and Internal Voltage Characteristics” on page 120
   – “ADC Characteristics, Single Ended Channels. TA = -40°C to +85°C” on page 121
   – “Serial Programming Characteristics, TA = -40°C to +85°C” on page 122
6. Added description of new function, “Power Reduction Register”:
   – Added functional description on page 31
   – Added bit description on page 34
   – Added section “Supply Current of I/O Modules” on page 124
   – Updated Register Summary on page 158
7. Added description of new function, “Software BOD Disable”:
   – Added functional description on page 31
   – Updated section on page 32
   – Added register description on page 33
   – Updated Register Summary on page 158
8. Added description of enhanced function, “Enhanced Power-On Reset”:
   – Updated Table 18-4 on page 120, and Table 18-5 on page 120

Table of Contents

Features ***1***

1 Pin Configurations ***2***

1.1 Pin Description 3

2 Overview ***4***

2.1 Block Diagram 4

3 About ***6***

3.1 Resources 6

3.2 Code Examples 6

3.3 Data Retention 6

4 CPU Core ***7***

4.1 Architectural Overview 7

4.2 ALU – Arithmetic Logic Unit 8

4.3 Status Register 8

4.4 General Purpose Register File 10

4.5 Stack Pointer 11

4.6 Instruction Execution Timing 12

4.7 Reset and Interrupt Handling 12

5 Memories ***15***

5.1 In-System Reprogrammable Flash Program Memory 15

5.2 SRAM Data Memory 15

5.3 EEPROM Data Memory 16

5.4 I/O Memory 20

5.5 Register Description 20

6 System Clock and Clock Options ***23***

6.1 Clock Systems and their Distribution 23

6.2 Clock Sources 24

6.3 System Clock Prescaler 26

6.4 Register Description 27

7 Power Management and Sleep Modes ***30***

7.1 Sleep Modes 30

7.2 Software BOD Disable 31

7.3 Power Reduction Register 31

7.4 Minimizing Power Consumption 32
7.5 Register Description 33

8 System Control and Reset 35

8.1 Resetting the AVR 35
8.2 Reset Sources 36
8.3 Internal Voltage Reference 38
8.4 Watchdog Timer 38
8.5 Register Description 42

9 Interrupts 45

9.1 Interrupt Vectors 45
9.2 External Interrupts 46
9.3 Register Description 47

10 I/O Ports 49

10.1 Overview 49
10.2 Ports as General Digital I/O 50
10.3 Alternate Port Functions 54
10.4 Register Description 57

11 8-bit Timer/Counter0 with PWM 59

11.1 Features 59
11.2 Overview 59
11.3 Timer/Counter Clock Sources 60
11.4 Counter Unit 60
11.5 Output Compare Unit 61
11.6 Compare Match Output Unit 63
11.7 Modes of Operation 64
11.8 Timer/Counter Timing Diagrams 68
11.9 Register Description 70

12 Timer/Counter Prescaler 77

12.1 Overview 77
12.2 Prescaler Reset 77
12.3 External Clock Source 77
12.4 Register Description. 78

13 Analog Comparator 79

13.1 Analog Comparator Multiplexed Input 79

13.2 Register Description 80

14 Analog to Digital Converter 82

14.1 Features 82
14.2 Overview 82
14.3 Operation 83
14.4 Starting a Conversion 83
14.5 Prescaling and Conversion Timing 84
14.6 Changing Channel or Reference Selection 87
14.7 ADC Noise Canceler 88
14.8 Analog Input Circuitry 88
14.9 Analog Noise Canceling Techniques 89
14.10 ADC Accuracy Definitions 89
14.11 ADC Conversion Result 92
14.12 Register Description 92

15 debugWIRE On-chip Debug System 96

15.1 Features 96
15.2 Overview 96
15.3 Physical Interface 96
15.4 Software Break Points 97
15.5 Limitations of debugWIRE 97
15.6 Register Description 97

16 Self-Programming the Flash 98

16.1 Performing Page Erase by SPM 98
16.2 Filling the Temporary Buffer (Page Loading) 98
16.3 Performing a Page Write 99
16.4 Addressing the Flash During Self-Programming 99
16.5 EEPROM Write Prevents Writing to SPMCSR 100
16.6 Reading Fuse and Lock Bits from Firmware 100
16.7 Preventing Flash Corruption 101
16.8 Programming Time for Flash when Using SPM 101
16.9 Register Description 102

17 Memory Programming 103

17.1 Program And Data Memory Lock Bits 103
17.2 Fuse Bytes 104
17.3 Calibration Bytes 105

17.4 Signature Bytes 105
17.5 Page Size 105
17.6 Serial Programming 106
17.7 High-Voltage Serial Programming 109
17.8 Considerations for Efficient Programming 113

18 Electrical Characteristics 117

18.1 Absolute Maximum Ratings* 117
18.2 DC Characteristics 117
18.3 Speed 118
18.4 Clock Characteristics 119
18.5 System and Reset Characteristics 120
18.6 Analog Comparator Characteristics 121
18.7 ADC Characteristics 121
18.8 Serial Programming Characteristics 122
18.9 High-voltage Serial Programming Characteristics 123

19 Typical Characteristics 124

19.1 Supply Current of I/O Modules 124
19.2 Current Consumption in Active Mode 125
19.3 Current Consumption in Idle Mode 128
19.4 Current Consumption in Power-down Mode 131
19.5 Current Consumption in Reset 132
19.6 Current Consumption of Peripheral Units 133
19.7 Pull-up Resistors 135
19.8 Output Driver Strength (Low Power Pins) 138
19.9 Output Driver Strength (Regular Pins) 141
19.10 Input Thresholds and Hysteresis (for I/O Ports) 147
19.11 BOD, Bandgap and Reset 150
19.12 Internal Oscillator Speed 154

20 Register Summary 158

21 Instruction Set Summary 160

22 Ordering Information 162

23 Packaging Information 163

23.1 8P3 163
23.2 8S2 164

23.3 8S1 165
23.4 20M1 166
23.5 10M1 167

24 Errata 168

24.1 ATtiny13A Rev. G – H 168
24.2 ATtiny13A Rev. E – F 168
24.3 ATtiny13 Rev. A – D 168

25 Datasheet Revision History 169

25.1 Rev. 8126F – 05/12 169
25.2 Rev. 8126E – 07/10 169
25.3 Rev. 8126D – 11/09 169
25.4 Rev. 8126C – 09/09 169
25.5 Rev. 8126B – 11/08 169
25.6 Rev. 8126A – 05/08 169

Headquarters

Atmel Corporation
2325 Orchard Parkway
San Jose, CA 95131
USA
Tel: (+1)(408) 441-0311
Fax: (+1)(408) 487-2600

International

Atmel Asia Limited
Unit 01-5 & 16, 19F
BEA Tower, Millennium City 5
418 Kwun Tong Road
Kwun Tong, Kowloon
HONG KONG
Tel: (+852) 2245-6100
Fax: (+852) 2722-1369

Atmel Munich GmbH
Business Campus
Parkring 4
D-85748 Garching b. Munich
GERMANY
Tel: (+49) 89-31970-0
Fax: (+49) 89-3194621

Atmel Japan
9F, Tonetsu Shinkawa Bldg.
1-24-8 Shinkawa
Chuo-ku, Tokyo 104-0033
JAPAN
Tel: (+81)(3) 3523-3551
Fax: (+81)(3) 3523-7581

Product Contact

Web Site
www.atmel.com

Technical Support
avr@atmel.com

Sales Contact
www.atmel.com/contacts

Literature Requests
www.atmel.com/literature

Disclaimer: The information in this document is provided in connection with Atmel products. No license, express or implied, by estoppel or otherwise, to any intellectual property right is granted by this document or in connection with the sale of Atmel products. **EXCEPT AS SET FORTH IN ATMEL'S TERMS AND CONDITIONS OF SALE LOCATED ON ATMEL'S WEB SITE, ATMEL ASSUMES NO LIABILITY WHATSOEVER AND DISCLAIMS ANY EXPRESS, IMPLIED OR STATUTORY WARRANTY RELATING TO ITS PRODUCTS INCLUDING, BUT NOT LIMITED TO, THE IMPLIED WARRANTY OF MERCHANTABILITY, FITNESS FOR A PARTICULAR PURPOSE, OR NON-INFRINGEMENT. IN NO EVENT SHALL ATMEL BE LIABLE FOR ANY DIRECT, INDIRECT, CONSEQUENTIAL, PUNITIVE, SPECIAL OR INCIDENTAL DAMAGES (INCLUDING, WITHOUT LIMITATION, DAMAGES FOR LOSS OF PROFITS, BUSINESS INTERRUPTION, OR LOSS OF INFORMATION) ARISING OUT OF THE USE OR INABILITY TO USE THIS DOCUMENT, EVEN IF ATMEL HAS BEEN ADVISED OF THE POSSIBILITY OF SUCH DAMAGES.** Atmel makes no representations or warranties with respect to the accuracy or completeness of the contents of this document and reserves the right to make changes to specifications and product descriptions at any time without notice. Atmel does not make any commitment to update the information contained herein. Unless specifically provided otherwise, Atmel products are not suitable for, and shall not be used in, automotive applications. Atmel's products are not intended, authorized, or warranted for use as components in applications intended to support or sustain life.

© 2012 Atmel Corporation. All rights reserved.

Atmel®, logo and combinations thereof, and others are registered trademarks or trademarks of Atmel Corporation or its subsidiaries. Other terms and product names may be trademarks of others.

8126F–AVR–05/12

Mouser Electronics

Authorized Distributor

Click to View Pricing, Inventory, Delivery & Lifecycle Information:

Microchip:
ATTINY13A-SN ATTINY13A-MMUR ATTINY13A-MUR ATTINY13A-SHR ATTINY13A-SSHR ATTINY13A-SFR ATTINY13A-SNR ATTINY13A-SS7R ATTINY13A-MMU ATTINY13A-PU ATTINY13A-SSU ATTINY13A-SU ATTINY13A-MU ATTINY13A-W ATTINY13A-W-11 ATTINY13A-SSH ATTINY13A-SH ATTINY13A-SF ATTINY13A-SS7 ATTINY13A-SSUR ATTINY13A-SUR ATTINY13A-MMF ATTINY13A-MMFR

Компания «ЭлектроПласт» предлагает заключение долгосрочных отношений при поставках импортных электронных компонентов на взаимовыгодных условиях!

Наши преимущества:

- Оперативные поставки широкого спектра электронных компонентов отечественного и импортного производства напрямую от производителей и с крупнейших мировых складов;
- Поставка более 17-ти миллионов наименований электронных компонентов;
- Поставка сложных, дефицитных, либо снятых с производства позиций;
- Оперативные сроки поставки под заказ (от 5 рабочих дней);
- Экспресс доставка в любую точку России;
- Техническая поддержка проекта, помощь в подборе аналогов, поставка прототипов;
- Система менеджмента качества сертифицирована по Международному стандарту ISO 9001;
- Лицензия ФСБ на осуществление работ с использованием сведений, составляющих государственную тайну;
- Поставка специализированных компонентов (Xilinx, Altera, Analog Devices, Intersil, Interpoint, Microsemi, Aeroflex, Peregrine, Syfer, Eurofarad, Texas Instrument, Miteq, Cobham, E2V, MA-COM, Hittite, Mini-Circuits,General Dynamics и др.);

Помимо этого, одним из направлений компании «ЭлектроПласт» является направление «Источники питания». Мы предлагаем Вам помощь Конструкторского отдела:

- Подбор оптимального решения, техническое обоснование при выборе компонента;
- Подбор аналогов;
- Консультации по применению компонента;
- Поставка образцов и прототипов;
- Техническая поддержка проекта;
- Защита от снятия компонента с производства.

Как с нами связаться

Телефон: 8 (812) 309 58 32 (многоканальный)
Факс: 8 (812) 320-02-42
Электронная почта: org@eplast1.ru
Адрес: 198099, г. Санкт-Петербург, ул. Калинина, дом 2, корпус 4, литера А.