THESE DRAWINGS AND SPECIFICATIONS ARE THE SOLE PROPERTY OF I/O INTERCONNECT INC. U.S.A. AND SHALL NOT BE REPRODUCED, COPIED, OR USED IN ANY MANNER WITHOUT THE PRIOR WRITTEN CONSENT OF I/O INTERCONNECT INC. OR ITS AFFILIATED SUBSIDIARIES.

DWG. NO.	ZONE	REV.	DESCRIPTION	DATE	APPROV
X10-0X3		F	ECN 387	06/09/95	G T

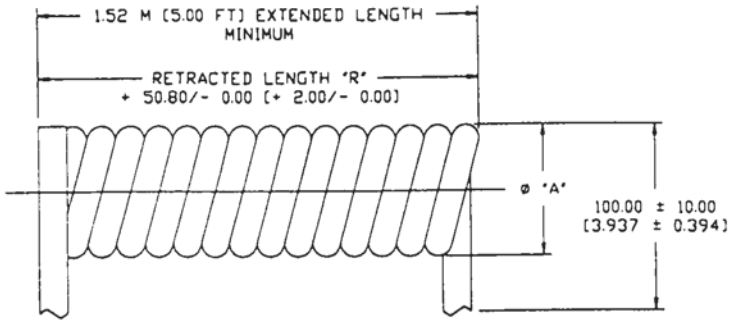

BUNDLE SPECIFICATION

NOTES: UNLESS OTHERWISED SPECIFIED.

1.0 PACKAGING SPECIFICATION

1.01 USE CLEAR TAPE TO BUNDLE 25 CABLES TOGETHER AT THE MID SECTION.

1.02 PLACE PLASTIC BAG IN SHIPPING BOX AND LAY 10 BUNDLE OR 250 PIECES MAX. PER SHIPPING BOX. CLOSE PLASTIC BAG AND SEAL BOX ALONG 3 SURFACES WITH TAPE.

CONDUCTORS NUMBER OF	MILLIMETERS	INCHES	DIMENSION MAX. OUTSIDE SHIPPING BOX
	RETRACTED LENGTH 'R'		
4	431.80	(17.000)	L=13.00" X W=20.00" X H=9.0
6	457.20	(18.000)	L=13.00" X W=20.00" X H=9.0
8	558.80	(22.000)	L=13.00" X W=25.00" X H=9.0

TABULATION BLOCK

THIRD ANGLE PROJECTION

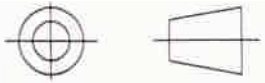

UNLESS OTHERWISED NOTED:
1) DIMENSIONS ARE IN MILLIMETER [INCHES]
2) TOLERANCES:
X.X ± 0.20 [0.008]
X.XX ± 6.35 [0.250]

I/O INTERCONNECT
SANTA ANA, CALIFORNIA

DR: C. WANG 06/09/95
CHKD:
CHKD:
CHKD:
CHKD:

TITLE: 26 AWG (12/0.12 mm) BARE COPP 5.00 FT EXTENDED, NON-UL, UNSHIELDED, MODULAR CABLE

PART NO: 121-X10-0X3

CUSTOMER: I/O INTERCONNECT

SCALE: NONE

SHEET 2 OF

THESE DRAWINGS AND SPECIFICATIONS ARE THE SOLE PROPERTY OF I/O INTERCONNECT INC., U.S.A. AND SHALL NOT BE REPRODUCED, COPIED, OR USED IN ANY MANNER WITHOUT THE PRIOR WRITTEN CONSENT OF I/O INTERCONNECT INC. OR ITS AFFILIATED SUBSIDIARIES

DWG NO.	ZONE	REV	DESCRIPTION	DATE	APPROV
X10-0X2		1	ECN 387	06/09/95	C.T.

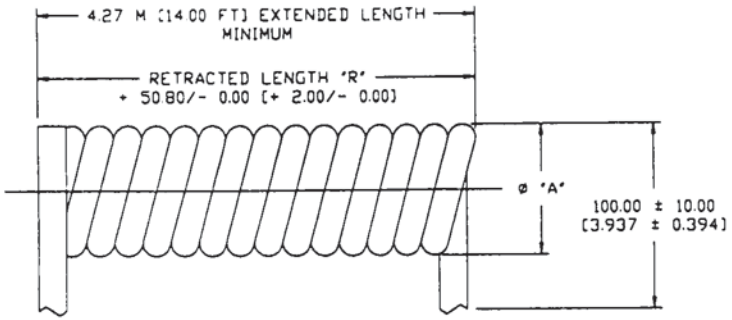

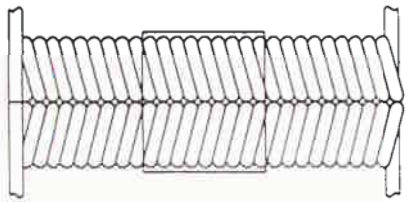

BUNDLE SPECIFICATION

NOTES: UNLESS OTHERWISED SPECIFIED:

1.0 PACKAGING SPECIFICATION

1.01 USE CLEAR TAPE TO BUNDLE 25 CABLES TOGETHER AT THE MID SECTION.

1.02 PLACE PLASTIC BAG IN SHIPPING BOX AND LAY 10 BUNDLE OR 250 PIECES MAX. PER SHIPPING BOX. CLOSE PLASTIC BAG AND SEAL BOX ALONG 3 SURFACES WITH TAPE.

CONDUCTORS NUMBER OF	MILLIMETERS	INCHES	DIMENSION MAX. OUTSIDE SHIPPING BOX
4	863.60	[34.000]	L=13.00" X W=40.00" X H=9.00
6	1117.60	[44.000]	L=13.00" X W=50.00" X H=9.00
8	1270.00	[50.000]	L=13.00" X W=55.00" X H=9.00
	RETRACTED LENGTH 'R'		

TABULATION BLOCK

THIRD ANGLE PROJECTION

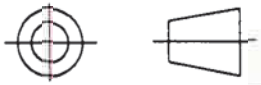

UNLESS OTHERWISED NOTED:
1) DIMENSIONS ARE IN MILLIMETER [INCHES]
2) TOLERANCES:
X.X ± 0.20 [0.008]
X.XX ± 6.35 [0.250]

I/O INTERCONNECT
SANTA ANA, CALIFORNIA

DR: C. WANG 06/09/95
CHKD:
CHKD:
CHKD:
CHKD:

TITLE: 26 AWG (12/0.12 mm) BARE COPPE 14.00 FT EXTENDED, NON-UL, UNSHIELDED, MODULAR CABLE

PART NO: 121-X10-0X2

CUSTOMER: I/O INTERCONNECT

SCALE: NONE SHEET 2 OF

THESE DRAWINGS AND SPECIFICATIONS ARE THE SOLE PROPERTY OF I/O INTERCONNECT INC. USA AND SHALL NOT BE REPRODUCED, COPIED, OR USED IN ANY MANNER WITHOUT THE PRIOR WRITTEN CONSENT OF I/O INTERCONNECT INC. OR ITS AFFILIATED SUBSIDIARIES

DWG. NO	ZONE	REV.	DESCRIPTION	DATE	APPROVED
X10-0X1		I	ECN 387	06/09/95	G.T

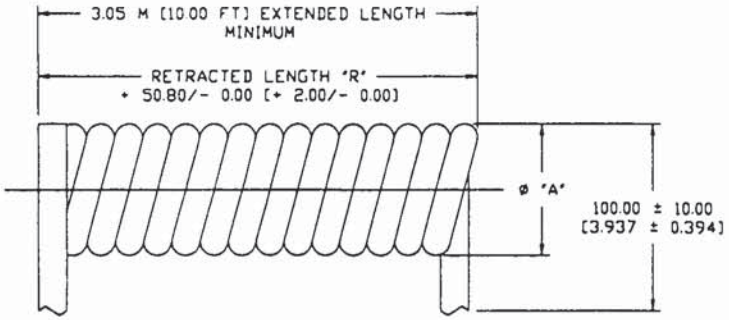

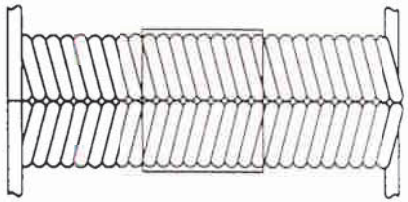

BUNDLE SPECIFICATION

NOTES: UNLESS OTHERWISED SPECIFIED.

1.0 PACKAGING SPECIFICATION

1.01 USE CLEAR TAPE TO BUNDLE 25 CABLES TOGETHER AT THE MID SECTION.

1.02 PLACE PLASTIC BAG IN SHIPPING BOX AND LAY 10 BUNDLE OR 250 PIECES MAX. PER SHIPPING BOX. CLOSE PLASTIC BAG AND SEAL BOX ALONG 3 SURFACES WITH TAPE.

CONDUCTORS NUMBER OF	MILLIMETERS	INCHES	DIMENSION MAX. OUTSIDE SHIPPING BOX
	RETRACTED LENGTH 'R'		
4	762.00	[30.000]	L=10.00' X W=35.00' X H=9.00'
6	812.80	[32.000]	L=10.00' X W=35.00' X H=9.00'
8	1066.80	[42.000]	L=10.00' X W=45.00' X H=9.00'

TABULATION BLOCK

THIRD ANGLE PROJECTION

UNLESS OTHERWISED NOTED:
1) DIMENSIONS ARE IN MILLIMETER [INCHES]
2) TOLERANCES:
X.X ± 0.20 [0.008]
X.XX ± 6.35 [0.250]

I/O INTERCONNECT
SANTA ANA, CALIFORNIA

DR: C. WANG 06/09/95
CHKD:
CHKD:
CHKD:
CHKD:

TITLE: 26 AWG (12/0.12 mm) BARE COPPER 10.00 FT EXTENDED, NON-UL, UNSHIELDED, MODULAR CABLE

PART NO: 121-X10-0X1

CUSTOMER: I/O INTERCONNECT

REV: I

SCALE: NONE SHEET 2 OF 2

THESE DRAWINGS AND SPECIFICATIONS ARE THE SOLE PROPERTY OF I/O INTERCONNECT INC. U.S.A. AND SHALL NOT BE REPRODUCED, COPIED, OR USED IN ANY MANNER WITHOUT THE PRIOR WRITTEN CONSENT OF I/O INTERCONNECT INC. OR ITS AFFILIATED SUBSIDIARIES

DWG NO	ZONE	REV	DESCRIPTION	DATE	APPROV
X10-0X0		D	ECN 387	06/09/95	G.T.

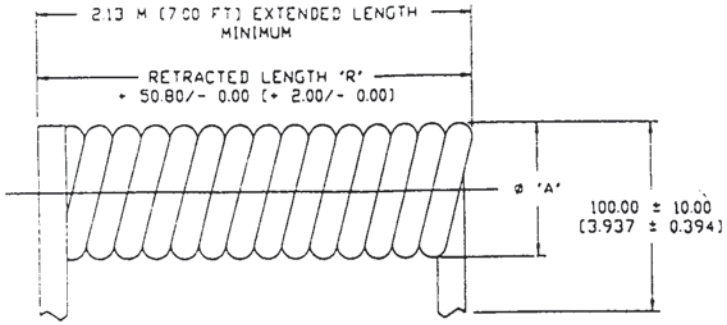

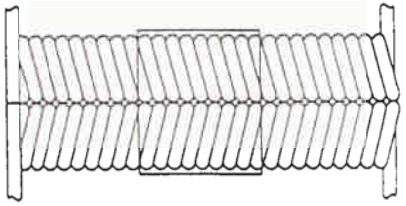

BUNDLE SPECIFICATION

NOTES UNLESS OTHERWISED SPECIFIED.

1.0 PACKAGING SPECIFICATION

1.01 USE CLEAR TAPE TO BUNDLE 25 CABLES TOGETHER AT THE MID SECTION.

1.02 PLACE PLASTIC BAG IN SHIPPING BOX AND LAY 10 BUNDLE OR 250 PIECES MAX. PER SHIPPING BOX. CLOSE PLASTIC BAG AND SEAL BOX ALONG 3 SURFACES WITH TAPE.

CONDUCTORS NUMBER OF	RETRACTED LENGTH 'R' MILLIMETERS	RETRACTED LENGTH 'R' INCHES	DIMENSION MAX. OUTSIDE SHIPPING BOX
4	533.40	(21.000)	L=13.00" X W=25.00" X H=9.0
6	609.60	(24.000)	L=13.00" X W=25.00" X H=9.0
8	711.20	(28.000)	L=13.00" X W=30.00" X H=9.0

TABULATION BLOCK

THIRD ANGLE PROJECTION

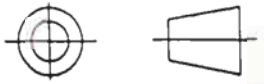

UNLESS OTHERWISED NOTED:
1) DIMENSIONS ARE IN MILLIMETER (INCHES)
2) TOLERANCES:
X.X ± 0.20 (0.008)
X.XX ± 6.35 (0.250)

I/O INTERCONNECT
SANTA ANA, CALIFORNIA

DR: C. WANG 06/09/95
CHKD:
CHKD:
CHKD:
CHKD:

TITLE: 26 AWG (12/0.12 mm) BARE COPP 7.00 FT EXTENDED, NON-UL UNSHIELDED, MODULAR CABLE

PART NO: 121-X10-0X0

CUSTOMER: I/O INTERCONNECT

SCALE: NONE SHEET 2 OF

THESE DRAWINGS AND SPECIFICATIONS ARE THE SOLE PROPERTY OF I/O INTERCONNECT INC., U.S.A. AND SHALL NOT BE REPRODUCED, COPIED, OR USED IN ANY MANNER WITHOUT THE PRIOR WRITTEN CONSENT OF I/O INTERCONNECT INC. OR ITS AFFILIATED SUBSIDIARIES.

DWG. NO.	ZONE	REV.	DESCRIPTION	DATE	APPROVED
X10-0X0		D	ECN 387	06/09/95	G.T

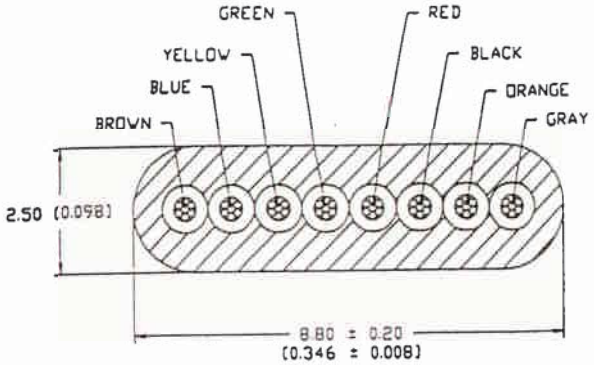

8 CONDUCTOR CABLE

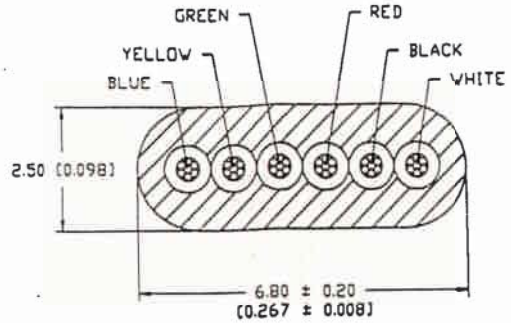

6 CONDUCTOR CABLE

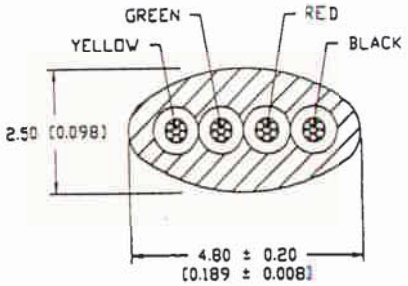

4 CONDUCTOR CABLE

NOTES: UNLESS OTHERWISED SPECIFIED.

1.0 MATERIAL AND SPECIFICATIONS

1.01 CONDUCTORS: 26 AWG (12/0.12 mm) STRANDED BARE COPPER.

1.02 INSULATION: POLYPROPYLENE

1.03 COLOR: PER CALLOUT

1.04 PACKAGING: (SEE PAGE 2)

2.0 ELECTRICAL CHARACTERISTICS

2.01 TEMPERATURE & VOLTAGE RATING: 80°C 30 V

2.02 CONDUCTORS RESISTANCE: 148 OHMS/KM MAX. AT 20°C

2.03 INSULATION RESISTANCE: 100 MEGAOHMS/KM MIN. AT 20°C

2.04 CAPACITANCE: 15 PF/FT (MAX)

2.05 DIELECTRIC TEST: AC-500V PER 1 MINUTE

I/O INTERCONNECT PART NUMBER	NUMBER OF CONDUCTORS	COLOR	ø 'A'
121-410-000	4	SILVER SATIN	[0.551 ± 0.039] 14.00 ± 1.00
121-410-010	4	BLACK	[0.551 ± 0.039] 14.00 ± 1.00
121-410-020	4	WHITE	[0.551 ± 0.039] 14.00 ± 1.00
121-610-000	6	SILVER SATIN	[0.551 ± 0.039] 14.00 ± 1.00
121-610-010	6	BLACK	[0.551 ± 0.039] 14.00 ± 1.00
121-610-020	6	WHITE	[0.551 ± 0.039] 14.00 ± 1.00
121-810-000	8	SILVER SATIN	[0.748 ± 0.039] 19.00 ± 1.00
121-810-010	8	BLACK	[0.748 ± 0.039] 19.00 ± 1.00
121-810-020	8	WHITE	[0.748 ± 0.039] 19.00 ± 1.00

THIRD ANGLE PROJECTION

UNLESS OTHERWISED NOTED:
1) DIMENSIONS ARE IN MILLIMETER [INCHES]
2) TOLERANCES:
X.X ± 0.20 [0.008]
X.XX ± 6.35 [0.250]

I/O INTERCONNECT
SANTA ANA, CALIFORNIA

DR: C. WANG 06/09/95
CHKD:
CHKD:
CHKD:
CHKD:

TITLE: 26 AWG (12/0.12 mm) BARE COPPE 7.00 FT EXTENDED, NON-UL, UNSHIELDED, MODULAR CABLE

PART NO: 121-X10-0X0

CUSTOMER: I/O INTERCONNECT

SCALE: NONE SHEET 1 OF

THESE DRAWINGS AND SPECIFICATIONS ARE THE SOLE PROPERTY OF I/O INTERCONNECT INC. U.S.A. AND SHALL NOT BE REPRODUCED, COPIED, OR USED IN ANY MANNER WITHOUT THE PRIOR WRITTEN CONSENT OF I/O INTERCONNECT INC. OR ITS AFFILIATED SUBSIDIARIES.

DWG. NO.	ZONE	REV.	DESCRIPTION	DATE	APPROV
X10-0X3		F	ECN 387	06/09/95	GT

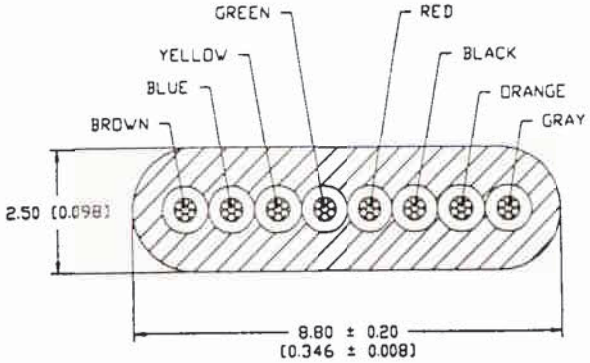

8 CONDUCTOR CABLE

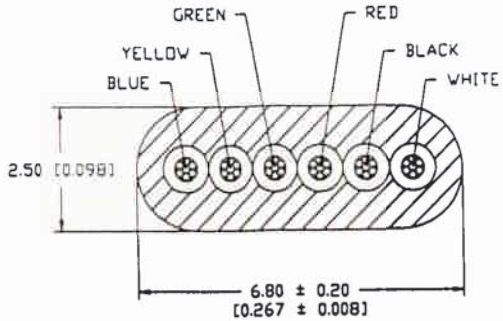

6 CONDUCTOR CABLE

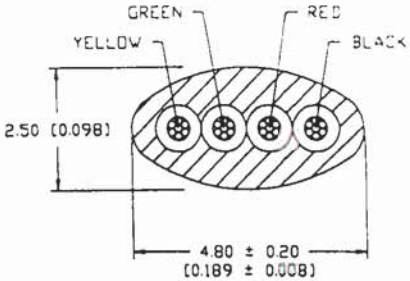

4 CONDUCTOR CABLE

NOTES: UNLESS OTHERWISED SPECIFIED.

1.0 MATERIAL AND SPECIFICATIONS

1.01 CONDUCTORS: 26 AWG (12/0.12 mm) STRANDED BARE COPPER.

1.02 INSULATION: POLYPROPYLENE

1.03 COLOR: PER CALLOUT

1.04 PACKAGING: (SEE PAGE 2)

2.0 ELECTRICAL CHARACTERISTICS

2.01 TEMPERATURE & VOLTAGE RATING: 80°C 30 V

2.02 CONDUCTORS RESISTANCE: 148 OHMS/KM MAX. AT 20°C

2.03 INSULATION RESISTANCE: 100 MEGAOHMS/KM MIN. AT 20°C

2.04 CAPACITANCE: 15 PF/FT (MAX)

2.05 DIELECTRIC TEST: AC-500V PER 1 MINUTE

I/O INTERCONNECT PART NUMBER	NUMBER OF CONDUCTORS	COLOR	Ø "A"
121-410-003	4	SILVER SATIN	[0.551 ± 0.0 14.00 ± 1.0
121-410-013	4	BLACK	[0.551 ± 0.0 14.00 ± 1.0
121-410-023	4	WHITE	[0.551 ± 0.0 14.00 ± 1.0
121-610-003	6	SILVER SATIN	[0.551 ± 0.0 14.00 ± 1.0
121-610-013	6	BLACK	[0.551 ± 0.0 14.00 ± 1.0
121-610-023	6	WHITE	[0.551 ± 0.0 14.00 ± 1.0
121-810-003	8	SILVER SATIN	[0.748 ± 0.0 19.00 ± 1.0
121-810-013	8	BLACK	[0.748 ± 0.0 19.00 ± 1.0
121-810-023	8	WHITE	[0.748 ± 0.0 19.00 ± 1.0

THIRD ANGLE PROJECTION

UNLESS OTHERWISED NOTED:
1) DIMENSIONS ARE IN MILLIMETER [INCHES]
2) TOLERANCES:
X.X ± 0.20 [0.008]
X.XX ± 6.35 [0.250]

I/O INTERCONNECT
SANTA ANA, CALIFORNIA

DR: C. WANG 06/09/95
CHKD:
CHKD:
CHKD:
CHKD:

TITLE: 26 AWG (12/0.12 mm) BARE COPP 5.00 FT EXTENDED, NON-UL, UNSHIELDED, MODULAR CABLE

PART NO: 121-X10-0X3

CUSTOMER: I/O INTERCONNECT

SCALE: NONE SHEET 1 OF

THESE DRAWINGS AND SPECIFICATIONS ARE THE SOLE PROPERTY OF I/O INTERCONNECT INC, USA AND SHALL NOT BE REPRODUCED, COPIED, OR USED IN ANY MANNER WITHOUT THE PRIOR WRITTEN CONSENT OF I/O INTERCONNECT INC. OR ITS AFFILIATES SUBSIDIARIES.

DWG. NO.	ZONE	REV.	DESCRIPTION	DATE	APPROVED
X10-0X3		G	ECN B435	09/15/98	R.Z.

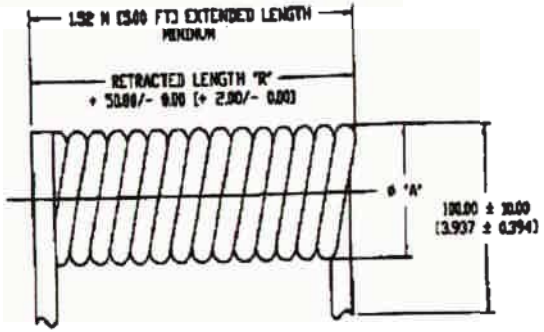

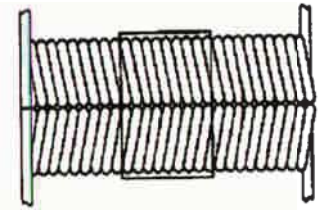

BUNDLE SPECIFICATION

NOTES: UNLESS OTHERWISE SPECIFIED.

1.0 MATERIAL AND SPECIFICATIONS

1.01 CONDUCTORS: 26 AWG (12/0.12 mm) STRANDED BARE COPPER.

1.02 INSULATION: POLYPROPYLENE

1.03 COLOR: PER CALLOUT

1.04 PACKAGING: (SEE PAGE 2)

2.0 ELECTRICAL CHARACTERISTICS

2.01 TEMPERATURE & VOLTAGE RATING: 80°C 30 V

2.02 CONDUCTORS RESISTANCE: 140 OHMS/KM MAX. AT 20°C

2.03 INSULATION RESISTANCE: 100 MEGAOHMS/KM MIN. AT 20°C

2.04 CAPACITANCE: 65 PF/FT (MAX)

2.05 DIELECTRIC TEST: AC-500V PER 1 MINUTE

3.0 PACKAGING SPECIFICATION

3.01 USE CLEAR TAPE TO BUNDLE 25 CABLES TOGETHER AT THE MID SECTION.

3.02 PLACE PLASTIC BAG IN SHIPPING BOX AND LAY 10 BUNDLE OR 250 PIECES MAX. PER SHIPPING BOX. CLOSE PLASTIC BAG AND SEAL BOX ALONG 3 SURFACES WITH TAPE.

CONDUCTORS NUMBER OF	MILLIMETERS	INCHES	DIMENSION MAX. OUTSIDE SHIPPING BOX
	RETRACTED LENGTH "R"		
4	431.80	(17.000)	L=13.00" X W=20.00" X H=9.00"
6	457.20	(18.000)	L=13.00" X W=20.00" X H=9.00"
8	558.80	(22.000)	L=13.00" X W=25.00" X H=9.00"
10	609.60	(24.000)	L=13.00" X W=25.00" X H=9.00"

TABULATION BLOCK

THIRD ANGLE PROJECTION

UNLESS OTHERWISE NOTED
1) DIMENSIONS ARE IN MILLIMETER (INCHES)
2) TOLERANCES:
X.X ± 0.20 (0.008)
X.XX ± 6.35 (0.250)

I/O INTERCONNECT
SANTA ANA, CALIFORNIA

DRAWN: [illegible] 09/15/98
CHKD:
CHKD:
CHKD:
CHKD:

TITLE: 26 AWG (12/0.12 mm) BARE COPPER 5.00 FT EXTENDED, NON-UL, UNSHIELDED, MODULAR CABLE

PART NO: 12.-X10-0X3

CUSTOMER: I/O INTERCONNECT

REV: G

SCALE: NONE

SHEET 2 OF 2

THESE DRAWINGS AND SPECIFICATIONS ARE THE SOLE PROPERTY OF I/O INTERCONNECT INC., U.S.A. AND SHALL NOT BE REPRODUCED, COPIED, OR USED IN ANY MANNER WITHOUT THE PRIOR WRITTEN CONSENT OF I/O INTERCONNECT INC. OR ITS AFFILIATED SUBSIDIARIES.

DWG. NO.	ZONE	REV.	DESCRIPTION	DATE	APPROVED
X10-0X0		E	ECN 3435	09/15/98	R.Z.

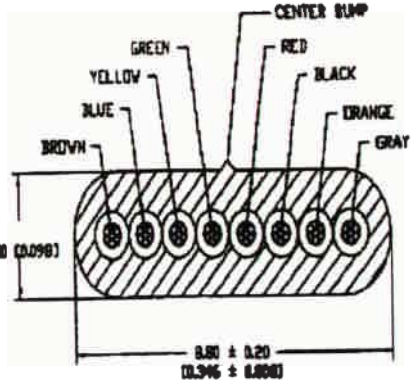

8 CONDUCTOR CABLE

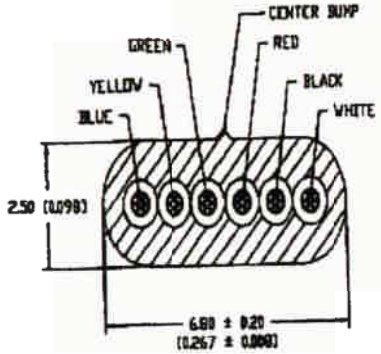

6 CONDUCTOR CABLE

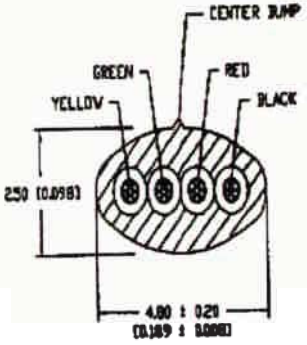

4 CONDUCTOR CABLE

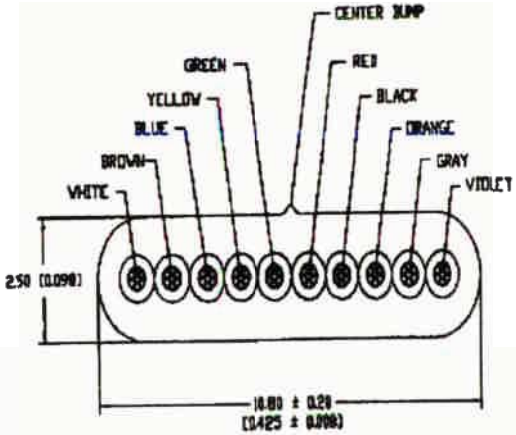

10 CONDUCTOR CABLE

I/O INTERCONNECT PART NUMBER	NUMBER OF CONDUCTORS	COLOR	# "A"
121-410-000	4	SILVER SATIN	(0.551 ± 0.039) 14.00 ± 1.00
121-410-010	4	BLACK	(0.551 ± 0.039) 14.00 ± 1.00
121-410-020	4	WHITE	(0.551 ± 0.039) 14.00 ± 1.00
121-610-000	6	SILVER SATIN	(0.551 ± 0.039) 14.00 ± 1.00
121-610-010	6	BLACK	(0.551 ± 0.039) 14.00 ± 1.00
121-610-020	6	WHITE	(0.551 ± 0.039) 14.00 ± 1.00
121-810-000	8	SILVER SATIN	(0.748 ± 0.039) 19.00 ± 1.00
121-810-010	8	BLACK	(0.748 ± 0.039) 19.00 ± 1.00
121-810-020	8	WHITE	(0.748 ± 0.039) 19.00 ± 1.00
121-010-000	10	SILVER SATIN	(0.748 ± 0.039) 19.00 ± 1.00
121-010-010	10	BLACK	(0.748 ± 0.039) 19.00 ± 1.00
121-010-020	10	WHITE	(0.748 ± 0.039) 19.00 ± 1.00

THIRD ANGLE PROJECTION

UNLESS OTHERWISED NOTED:
1) DIMENSIONS ARE IN MILLIMETER (INCHES)
2) TOLERANCES:
X.X ± 0.20 (0.008)
X.XX ± 6.35 (0.250)

I/O INTERCONNECT
SANTA ANA, CALIFORNIA

DRAWN: 09/15/98
CHKD:
CHKD:
CHKD:
CHKD:

TITLE: 26 AWG (12/0.12 mm) BARE COPPER 7.00 FT EXTENDED, NON-UL, UNSHIELDED, MODULAR CABLE

PART NO: 121-710-0X0

CUSTOMER: I/O INTERCONNECT

REV. E

SCALE: NONE

SHEET 1 OF 2

Компания «ЭлектроПласт» предлагает заключение долгосрочных отношений при поставках импортных электронных компонентов на взаимовыгодных условиях!

Наши преимущества:

- Оперативные поставки широкого спектра электронных компонентов отечественного и импортного производства напрямую от производителей и с крупнейших мировых складов;
- Поставка более 17-ти миллионов наименований электронных компонентов;
- Поставка сложных, дефицитных, либо снятых с производства позиций;
- Оперативные сроки поставки под заказ (от 5 рабочих дней);
- Экспресс доставка в любую точку России;
- Техническая поддержка проекта, помощь в подборе аналогов, поставка прототипов;
- Система менеджмента качества сертифицирована по Международному стандарту ISO 9001;
- Лицензия ФСБ на осуществление работ с использованием сведений, составляющих государственную тайну;
- Поставка специализированных компонентов (Xilinx, Altera, Analog Devices, Intersil, Interpoint, Microsemi, Aeroflex, Peregrine, Syfer, Eurofarad, Texas Instrument, Miteq, Cobham, E2V, MA-COM, Hittite, Mini-Circuits,General Dynamics и др.);

Помимо этого, одним из направлений компании «ЭлектроПласт» является направление «Источники питания». Мы предлагаем Вам помощь Конструкторского отдела:

- Подбор оптимального решения, техническое обоснование при выборе компонента;
- Подбор аналогов;
- Консультации по применению компонента;
- Поставка образцов и прототипов;
- Техническая поддержка проекта;
- Защита от снятия компонента с производства.

Как с нами связаться

Телефон: 8 (812) 309 58 32 (многоканальный)
Факс: 8 (812) 320-02-42
Электронная почта: org@eplast1.ru
Адрес: 198099, г. Санкт-Петербург, ул. Калинина, дом 2, корпус 4, литера А.