PLL520-05/-06/-07/-08/-09

Low Phase Noise VCXO with multipliers (for 100-200MHz Fund Xtal)

FEATURES

- 100MHz to 200MHz Fundamental Mode Crystal.
- Output range: 100 – 200MHz (no multiplication), 200 – 400MHz (2x multiplier), 400 – 800MHz (4x multiplier), or 800MHz – 1GHz (PLL520-09 TSSOP only, 8x multiplier).
- High yield design supports up to 2pF stray capacitance at 200MHz.
- CMOS (Standard drive PLL520-07 or Selectable Drive PLL520-06), PECL (Enable low PLL520-08 or Enable high PLL520-05) or LVDS output (PLL520-09).
- Integrated variable capacitors.
- Supports 3.3V-Power Supply.
- Available in 16-Pin (TSSOP or 3x3mm QFN)
  Note: PLL520-06 only available in 3x3mm.
  Note: PLL520-07 only available in TSSOP.

DESCRIPTION

The PLL520-05/-06/-07/-08/-09 is a family of VCXO ICs specifically designed to pull high frequency fundamental crystals. Their design was optimized to tolerate higher limits of interelectrode capacitance and bonding capacitance to improve yield. They achieve very low current into the crystal resulting in better overall stability. Their internal varicaps allow an on chip frequency pulling, controlled by the VCON input.

BLOCK DIAGRAM

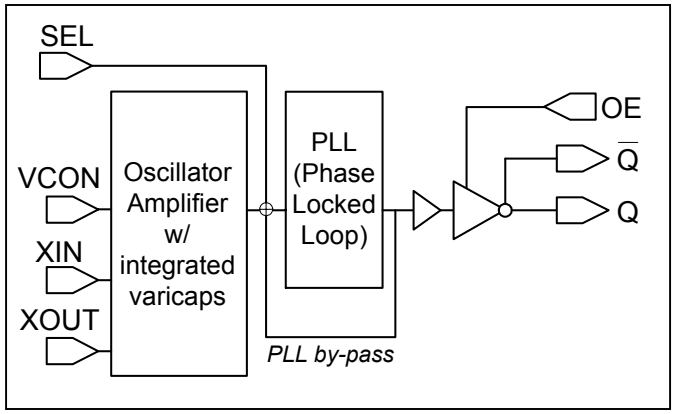

PIN CONFIGURATION

(Top View)

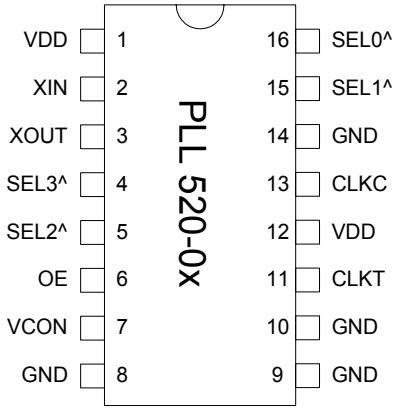

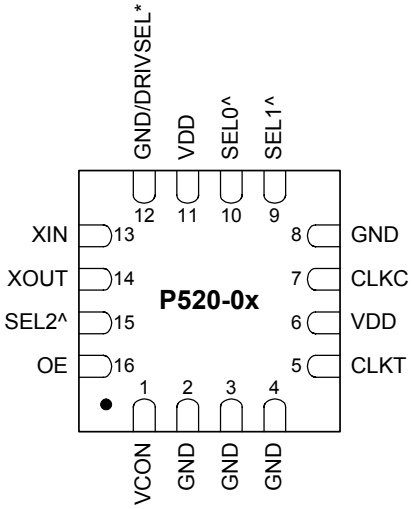

^: Internal pull-up
*: PLL520-06 pin 12 is output drive select (DRIVSEL)
(0 for High Drive CMOS, 1 for Standard Drive CMOS)

OUTPUT ENABLE LOGICAL LEVELS

Part #	OE	State
PLL520-08	0 (Default)	Output enabled
	1	Tri-state
PLL520-05 PLL520-06 PLL520-07 PLL520-09	0	Tri-state
	1 (Default)	Output enabled

OE input: Logical states defined by PECL levels for PLL520-08
Logical states defined by CMOS levels for PLL520-05/-06/-07/-09

PIN DESCRIPTIONS

Name	TSSOP* Pin number	3x3mm QFN* Pin number	Type	Description
XIN	2	13	I	Crystal in connector.
XOUT	3	14	I	Crystal out connector.
OE	6	16	I	Output enable pin.
VCON	7	1	I	Frequency control input (0.3V to 3.0V)
GND	8,9, 10, 14	2,3,4,8,12	P	Ground (except pin 12 on PLL520-06: DRIVSEL see below).
DRIVSEL**	-	12	I	PLL520-06 only: Drive Select Input. This pin has an internal pull-up that will default DRIVSEL to '1' when not connect to GND. CMOS output of PLL520-06 will be high drive CMOS when DRIVSEL is set to '0', and will be standard CMOS otherwise.
CLKT	11	5	O	True output PECL (PLL520-08) or LVDS (PLL520-09) (N/C for PLL520-07)
CLKC	13	7	O	Complementary output PECL (PLL520-08) or LVDS (PLL520-09) (CMOS out for PLL520-07).
SEL0	16	10	I	Multiplier selector pins. These pins have an internal pull-up that will default SEL to '1' when not connected to GND.
SEL1	15	9	I	
SEL2	5	15	I	
SEL3	4	Not available	I	
VDD	1, 12	6,11	P	+3.3V power supply.

* Note: PLL520-06 only available in 3x3mm QFN, PLL520-07 only available in TSSOP.
** Note: DRIVSEL on pin 12 on PLL520-06 only.

FREQUENCY SELECTION TABLE

SEL3*	SEL2	SEL1	SEL0	Selected Multiplier
0*	0	1	1	Fin x 8 (PLL520-09 in TSSOP only)
1*	0	1	1	Fin x 4
1*	1	1	0	Fin x 2
1*	1	1	1	No multiplication

Note *: SEL3 is not available (always "1") in 3x3mm package
All pins have internal pull-ups (default value is 1). Connect to GND to set to 0.

ELECTRICAL SPECIFICATIONS

1. Absolute Maximum Ratings

PARAMETERS	SYMBOL	MIN.	MAX.	UNITS
Supply Voltage	V_{DD}		4.6	V
Input Voltage, dc	V_I	-0.5	V_{DD}+0.5	V
Output Voltage, dc	V_O	-0.5	V_{DD}+0.5	V
Storage Temperature	T_S	-65	150	°C
Ambient Operating Temperature*	T_A	-40	85	°C
Junction Temperature	T_J		125	°C
Lead Temperature (soldering, 10s)			260	°C
ESD Protection, Human Body Model			2	kV

Exposure of the device under conditions beyond the limits specified by Maximum Ratings for extended periods may cause permanent damage to the device and affect product reliability. These conditions represent a stress rating only, and functional operations of the device at these or any other conditions above the operational limits noted in this specification is not implied.

* **Note**: Operating Temperature is guaranteed by design for all parts (COMMERCIAL and INDUSTRIAL), but tested for COMMERCIAL grade only.

2. Crystal Specifications

PARAMETERS	SYMBOL	CONDITIONS	MIN.		MAX.	UNITS
Crystal Resonator Frequency	F_{XIN}	Parallel Fundamental Mode	100		200	MHz
Crystal Loading Rating	$C_{L\ (xtal)}$	Die at VCON = 1.65V		4		pF
Interelectrode Capacitance	C_0				3.5	pF
Crystal Pullability	$C_0/C_{1\ (xtal)}$	AT cut			250	-
Recommended ESR	R_E	AT cut			30	Ω

3. Voltage Controlled Crystal Oscillator

PARAMETERS	SYMBOL	CONDITIONS	MIN.	TYP.	MAX.	UNITS
VCXO Stabilization Time *	$T_{VCXOSTB}$	From power valid			10	ms
VCXO Tuning Range		F_{XIN} = 100 – 200MHz; XTAL C_0/C_1 < 250 0V ≤ VCON ≤ 3.3V		200*		ppm
CLK output pullability		VCON=1.65V, ±1.65V	±100*			ppm
On-chip Varicaps control range		VCON = 0 to 3.3V		4 – 18*		pF
Linearity					10*	%
VCXO Tuning Characteristic				65		ppm/V
VCON input impedance				60		kΩ
VCON modulation BW		0V ≤ VCON ≤ 3.3V, -3dB	25			kHz

Note: Parameters denoted with an asterisk (*) represent nominal characterization data and are not production tested to any specific limits.

4. General Electrical Specifications

PARAMETERS	SYMBOL	CONDITIONS	MIN.	TYP.	MAX.	UNITS
Supply Current (Loaded Outputs)	I_{DD}	PECL/LVDS/CMOS			100/80/40	mA
Operating Voltage	V_{DD}		2.97		3.63	V
Output Clock Duty Cycle		@ 50% V_{DD} (CMOS) @ 1.25V (LVDS) @ V_{DD} – 1.3V (PECL)	45 45 45	50 50 50	55 55 55	%
Short Circuit Current				±50		mA

5. Jitter Specifications

PARAMETERS	CONDITIONS	MIN.	TYP.	MAX.	UNITS
Period jitter RMS	At 155.52MHz, with capacitive decoupling between VDD and GND. Over 10,000 cycles		2.5		ps
Period jitter peak-to-peak			18.5	20	
Accumulated jitter RMS	At 155.52MHz, with capacitive decoupling between VDD and GND. Over 1,000,000 cycles.		2.5		ps
Accumulated jitter peak-to-peak			24	27	
Random Jitter	"RJ" measured on Wavecrest SIA 3000		2.5		ps
Integrated jitter RMS at 155MHz	Integrated 12 kHz to 20 MHz		0.3	0.4	ps
Period jitter RMS	At 622.08MHz, with capacitive decoupling between VDD and GND. Over 10,000 cycles		11		ps
Period jitter peak-to-peak			45	49	
Accumulated jitter RMS	At 622.08MHz, with capacitive decoupling between VDD and GND. Over 1,000,000 cycles.		11		ps
Accumulated jitter peak-to-peak			24	27	
Random Jitter	"RJ" measured on Wavecrest SIA 3000		3		ps
Integrated jitter RMS at 622MHz	Integrated 12 kHz to 20 MHz		1.6	1.8	ps

Measured on Wavecrest SIA 3000

6. Phase Noise Specifications

PARAMETERS	FREQUENCY	@10Hz	@100Hz	@1kHz	@10kHz	@100kHz	UNITS
Phase Noise relative to carrier	155.52MHz	-75	-95	-125	-140	-145	dBc/Hz
	622.08MHz	-75	-95	-110	-125	-120	

Note: Phase Noise measured at VCON = 0V

7. CMOS Electrical Specifications

PARAMETERS	SYMBOL	CONDITIONS	MIN.	TYP.	MAX.	UNITS
Output drive current (High Drive)	I_{OH}	V_{OH}= V_{DD}-0.4V, V_{DD}=3.3V	30			mA
	I_{OL}	V_{OL} = 0.4V, V_{DD} = 3.3V	30			mA
Output drive current (Standard Drive)	I_{OH}	V_{OH}= V_{DD}-0.4V, V_{DD}=3.3V	10			mA
	I_{OL}	V_{OL} = 0.4V, V_{DD} = 3.3V	10			mA
Output Clock Rise/Fall Time (Standard Drive)		0.3V ~ 3.0V with 15 pF load		2.4		ns
Output Clock Rise/Fall Time (High Drive)		0.3V ~ 3.0V with 15 pF load		1.2		

* Note: High Drive CMOS is available on PLL520-06 through DRIVSEL selector input on pin 12.

8. LVDS Electrical Characteristics

PARAMETERS	SYMBOL	CONDITIONS	MIN.	TYP.	MAX.	UNITS
Output Differential Voltage	V_{OD}	R_L = 100 Ω (see figure)	247	355	454	mV
V_{DD} Magnitude Change	ΔV_{OD}		-50		50	mV
Output High Voltage	V_{OH}			1.4	1.6	V
Output Low Voltage	V_{OL}		0.9	1.1		V
Offset Voltage	V_{OS}		1.125	1.2	1.375	V
Offset Magnitude Change	ΔV_{OS}		0	3	25	mV
Power-off Leakage	I_{OXD}	V_{out} = V_{DD} or GND, V_{DD} = 0V		±1	±10	uA
Output Short Circuit Current	I_{OSD}			-5.7	-8	mA

9. LVDS Switching Characteristics

PARAMETERS	SYMBOL	CONDITIONS	MIN.	TYP.	MAX.	UNITS
Differential Clock Rise Time	t_r	R_L = 100 Ω, C_L = 10 pF (see figure)	0.2	0.7	1.0	ns
Differential Clock Fall Time	t_f		0.2	0.7	1.0	ns

LVDS Levels Test Circuit

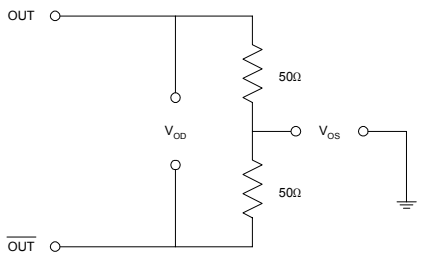

LVDS Switching Test Circuit

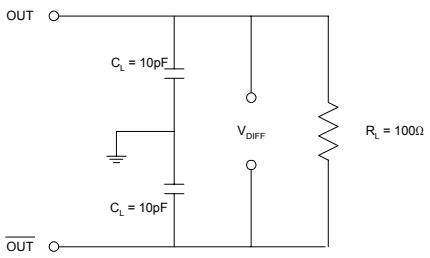

LVDS Transistion Time Waveform

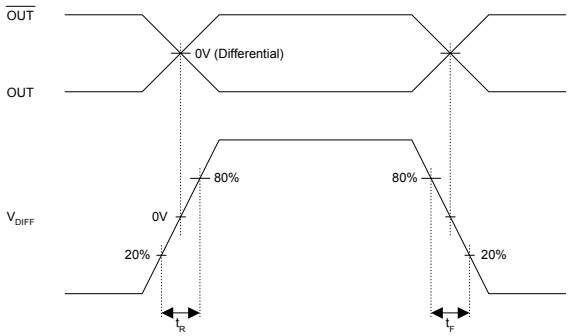

10. PECL Electrical Characteristics

PARAMETERS	SYMBOL	CONDITIONS	MIN.	MAX.	UNITS
Output High Voltage	V_{OH}	R_L = 50 Ω to (V_{DD} – 2V) (see figure)	V_{DD} – 1.025		V
Output Low Voltage	V_{OL}			V_{DD} – 1.620	V

11. PECL Switching Characteristics

PARAMETERS	SYMBOL	CONDITIONS	MIN.	TYP.	MAX.	UNITS
Clock Rise Time	t_r	@20/80% - PECL		0.6	1.5	ns
Clock Fall Time	t_f	@80/20% - PECL		0.5	1.5	ns

PECL Levels Test Circuit

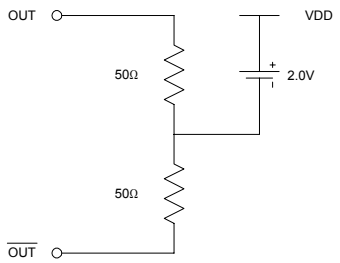

PECL Output Skew

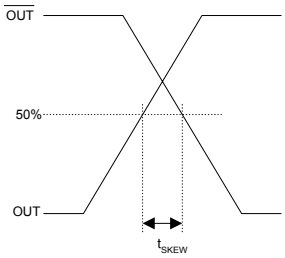

PECL Transistion Time Waveform

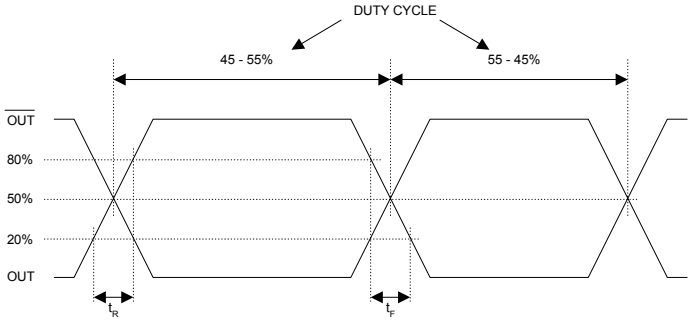

PACKAGE INFORMATION

16 PIN TSSOP (mm)		
Symbol	Min.	Max.
A	-	1.20
A1	0.05	0.15
B	0.19	0.30
C	0.09	0.20
D	4.90	5.10
E	4.30	4.50
H	6.40 BSC	
L	0.45	0.75
e	0.65 BSC	

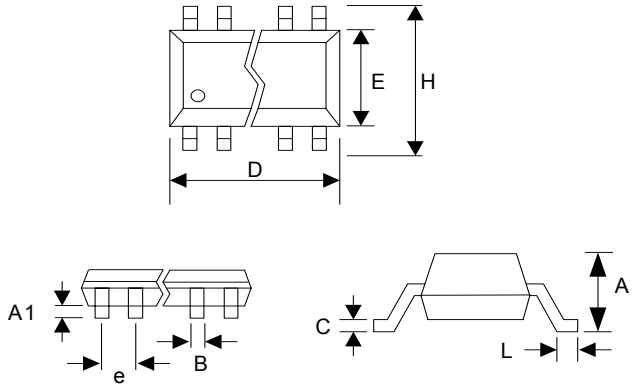

VARIATIONS:

SYMBOL	16 LD		
	MIN	NOM	MAX
e	0.50 BSC		
b	0.18	0.23	0.30
L	0.30	0.40	0.50
ND	4		
NE	4		

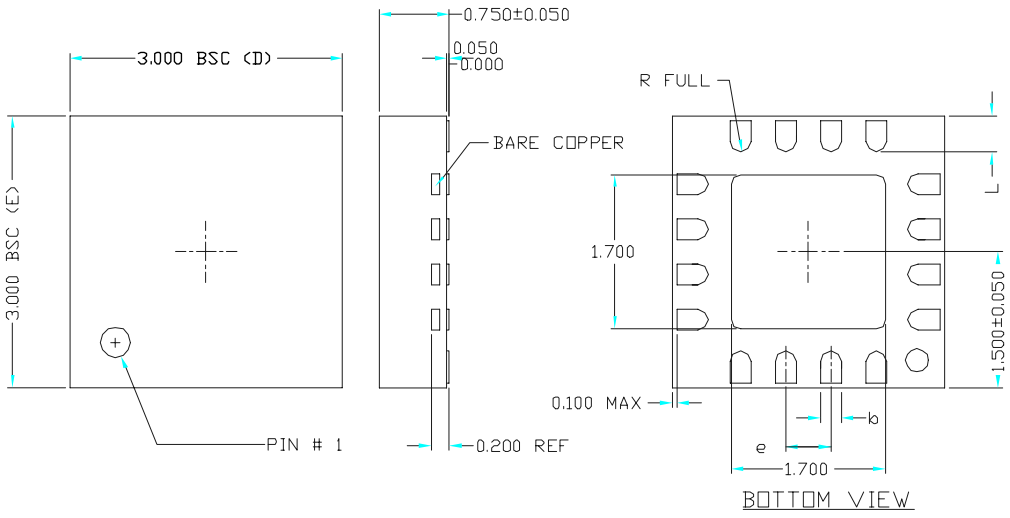

ORDERING INFORMATION

For part ordering, please contact our Sales Department:

47745 Fremont Blvd., Fremont, CA 94538, USA
Tel: (510) 492-0990 Fax: (510) 492-0991

PART NUMBER

The order number for this device is a combination of the following:
Device number, Package type and Operating temperature range

PLL520-0x O C

PART NUMBER

TEMPERATURE
C=COMMERCIAL
I=INDUSTRAL

PACKAGE TYPE
O=TSSOP Q=QFN

Order Number	Marking	Package Option
PLL520-05OC	P520-05OC	16-Pin TSSOP (Tube)
PLL520-05OC-R	P520-05OC	16-Pin TSSOP (Tape and Reel)
PLL520-05QC	P520-05QC	16-Pin 3x3 QFN (Tube)
PLL520-05QC-R	P520-05QC	16-Pin 3x3 QFN (Tape and Reel)
PLL520-06QC	P520-06QC	16-Pin 3x3 QFN (Tube)
PLL520-06QC-R	P520-06QC	16-Pin 3x3 QFN (Tape and Reel)
PLL520-07OC	P520-07OC	16-Pin TSSOP (Tube)
PLL520-07OC-R	P520-07OC	16-Pin TSSOP (Tape and Reel)
PLL520-08OC	P520-08OC	16-Pin TSSOP (Tube)
PLL520-08OC-R	P520-08OC	16-Pin TSSOP (Tape and Reel)
PLL520-08QC	P520-08QC	16-Pin 3x3 QFN (Tube)
PLL520-08QC-R	P520-08QC	16-Pin 3x3 QFN (Tape and Reel)
PLL520-09OC	P520-09OC	16-Pin TSSOP (Tube)
PLL520-09OC-R	P520-09OC	16-Pin TSSOP (Tape and Reel)
PLL520-09QC	P520-09QC	16-Pin 3x3 QFN (Tube)
PLL520-09QC-R	P520-09QC	16-Pin 3x3 QFN (Tape and Reel)

PhaseLink Corporation, reserves the right to make changes in its products or specifications, or both at any time without notice. The information furnished by Phaselink is believed to be accurate and reliable. However, PhaseLink makes no guarantee or warranty concerning the accuracy of said information and shall not be responsible for any loss or damage of whatever nature resulting from the use of, or reliance upon this product.

LIFE SUPPORT POLICY: PhaseLink's products are not authorized for use as critical components in life support devices or systems without the express written approval of the President of PhaseLink Corporation.

Компания «ЭлектроПласт» предлагает заключение долгосрочных отношений при поставках импортных электронных компонентов на взаимовыгодных условиях!

Наши преимущества:

- Оперативные поставки широкого спектра электронных компонентов отечественного и импортного производства напрямую от производителей и с крупнейших мировых складов;
- Поставка более 17-ти миллионов наименований электронных компонентов;
- Поставка сложных, дефицитных, либо снятых с производства позиций;
- Оперативные сроки поставки под заказ (от 5 рабочих дней);
- Экспресс доставка в любую точку России;
- Техническая поддержка проекта, помощь в подборе аналогов, поставка прототипов;
- Система менеджмента качества сертифицирована по Международному стандарту ISO 9001;
- Лицензия ФСБ на осуществление работ с использованием сведений, составляющих государственную тайну;
- Поставка специализированных компонентов (Xilinx, Altera, Analog Devices, Intersil, Interpoint, Microsemi, Aeroflex, Peregrine, Syfer, Eurofarad, Texas Instrument, Miteq, Cobham, E2V, MA-COM, Hittite, Mini-Circuits,General Dynamics и др.);

Помимо этого, одним из направлений компании «ЭлектроПласт» является направление «Источники питания». Мы предлагаем Вам помощь Конструкторского отдела:

- Подбор оптимального решения, техническое обоснование при выборе компонента;
- Подбор аналогов;
- Консультации по применению компонента;
- Поставка образцов и прототипов;
- Техническая поддержка проекта;
- Защита от снятия компонента с производства.

Как с нами связаться

Телефон: 8 (812) 309 58 32 (многоканальный)
Факс: 8 (812) 320-02-42
Электронная почта: org@eplast1.ru
Адрес: 198099, г. Санкт-Петербург, ул. Калинина, дом 2, корпус 4, литера А.