CUSTOMER'S NAME

MOUSER ELECTRONICS

ALPHA REFERENCE NO.
SP19070099

SPECIFICATION

PART NO.	ALPHA MODEL NAME
	RV170F-10-15R1-B1K-0021
	31CN205-F

MODEL NAME
MODEL NO.

APPROVAL

PREPARED BY	REVIEWED BY	APPROVED BY
鄧 2019.7.13 彩霞	李 2019-7-13. 延玲	章 2019.7.15 祖衛

台灣艾華電子工業股份有限公司

33045 桃園市桃園區中正路 1221 號 9 樓

TAIWAN ALPHA ELECTRONIC CO., LTD.

9F, No. 1221, Chung Cheng Rd., Taoyuan Dist., Taoyuan City ,330 Taiwan

Tel: 886-3-3577799 Fax: 886-3-3577700

EMAIL: sales@taiwanalpha.com.tw

URL: http//www.taiwanalpha.com

SLH-207-014

THIRD ANGLE PROJECTION

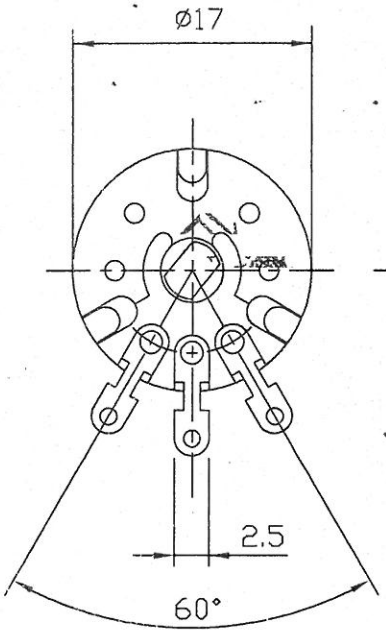

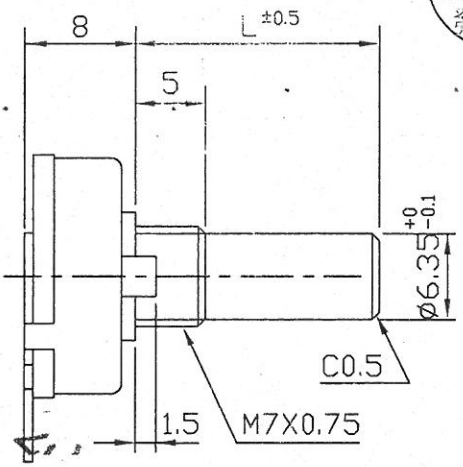

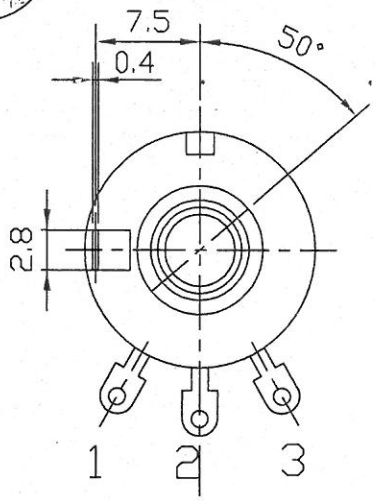

SHAFT SHOWN IN FULL C.C.W. POSITION

	L
✓	15
	15

NUT 1 PC

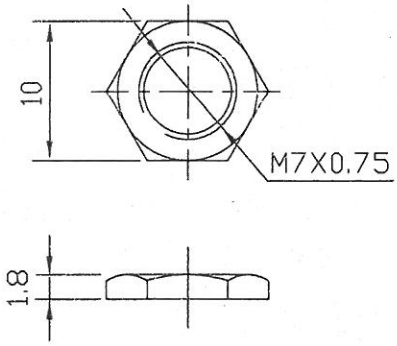

WASHER 1 PC t=0.4

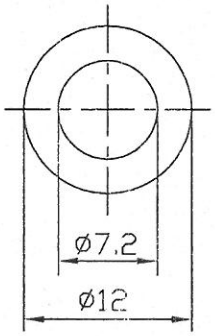

260° ROTATION MONO UNIT

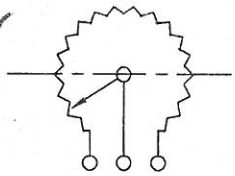

CIRCUIT

No.	DATE	DESCRIPTION	MODEL NAME
			(-0027)
			RV170F-10-(L)R1-XXX(-0021)

TOL.UNILESS OTHERWISE STATED	DIMENSION	SCALE	DRAWN BY	CHECKED BY	APPROVED BY	DRAWING No.
less than 10 ±0.3 above 10~30 ±0.5 above 30~100 ±1.0 above ±5'	mm	2:1	姚 2019.3.25 榕偉		韋 2019.3.25 祖衛	

ⓐ TAIWAN ALPHA ELECTRONIC CO., LTD.

		NOTE	DATE
CUSTOMER'S NAME			
CUSTOMER'S PART NAME			
CUSTOMER'S DRAWING NO.			

1. MECHANICAL SPECIFICATION

1. OUTSIDE DIMENSION	append fig.	
2. TOTAL ROTATION ANGLE	degree	260 ±5°
3. TOTAL TRAVEL STROKE	mm	±0.5
4. NUT WIRING STRENGTH	twisting moment	less than 7 kgf.cm
5. SCREW TIGHTENING FORCE	torsional moment	less than kgf.cm
6. ROTATION TORQUE	speed 60 deg/sec.	20~200 gf.cm
7. SLIDING FORCE	speed 20mm/sec	gf.cm
8. SHAFT LEVER STRENGTH	pulling pushing	more than kgf.cm
9. SHAFT LEVER WOBBLE	within mm (bending moment gf.cm)	
10. SHAFT LEVER STOP STRENGTH	more than 3 kgf.cm (static load) / 60 sec	
11. TERMINAL STRENGTH	more than 500 gf.cm / 10 ± 1 sec	
	soldering heat 350±5°C/3sec. 200gf.cm/10 ±1sec	
	resist change within ± 2%	
12. CLICK POSITION & TORQUE	gf.cm	
13. SWITCH WORKING ANGLE (STROKE)	degree (mm)	
14. SWITCH WORKING TORQUE (FORCE)	gf.cm	
15. SWITCH CIRCUIT		

2. ELECTRICAL SPECIFICATION

1. OVERALL RESISTANCE & TOLERANCE	terminal 1-3	1K Ω± 20 %
2. TAP RESISTANCE & TOLERANCE	terminal 1-4	Ω± %
3. RATED WATTAGE	temp 0~50°C	0.1 W
4. MAXIMUM WORKING VOLTAGE		200 V
5. RESISTANCE TAPER MEASURING POINT & TOLERANCE		50 %point 40 ~ 60 %
6. RESIDUAL RESISTANCE	terminal 1/3 side	less than 10/20 Ω
7. TAP RESIDUAL RESISTANCE	terminal 4 side	less than 100 Ω
8. SLIDE NOISE		less than 47 mV
9. INSULATION RESISTANCE	more than 50	MΩ(DC 500 V)
10. WITHSTAND VOLTAGE	AC 500	V 1 minute
11. TRACKING ERROR		
12. SWITCH CONTACT RESISTANCE	MΩ	less than mΩ
13. SWITCH RATING		

3. USABLE TEMPERATURE RANGE: from –10°C to 70°C

4. VR LIFE 15,000 ± TIMES

RESISTANCE CHANGE: within ± %

SLIDE NOISE : less than mV

SW LIFE ± TIMES

CONTACT RESISTANCE: less than mΩ

SHAFT

MATERIAL	ANGLE OF FLAT OR SLOT θ / at	DIMENSION M	L	F	T
			15		

MODEL NAME	DRAWING NO.
RV170F-10-15R1-B1K-0021	

REFERENCE NO.	REV

TAIWAN ALPHA ELECTRONIC CO., LTD.

STANDARD RESISTANCE TAPER

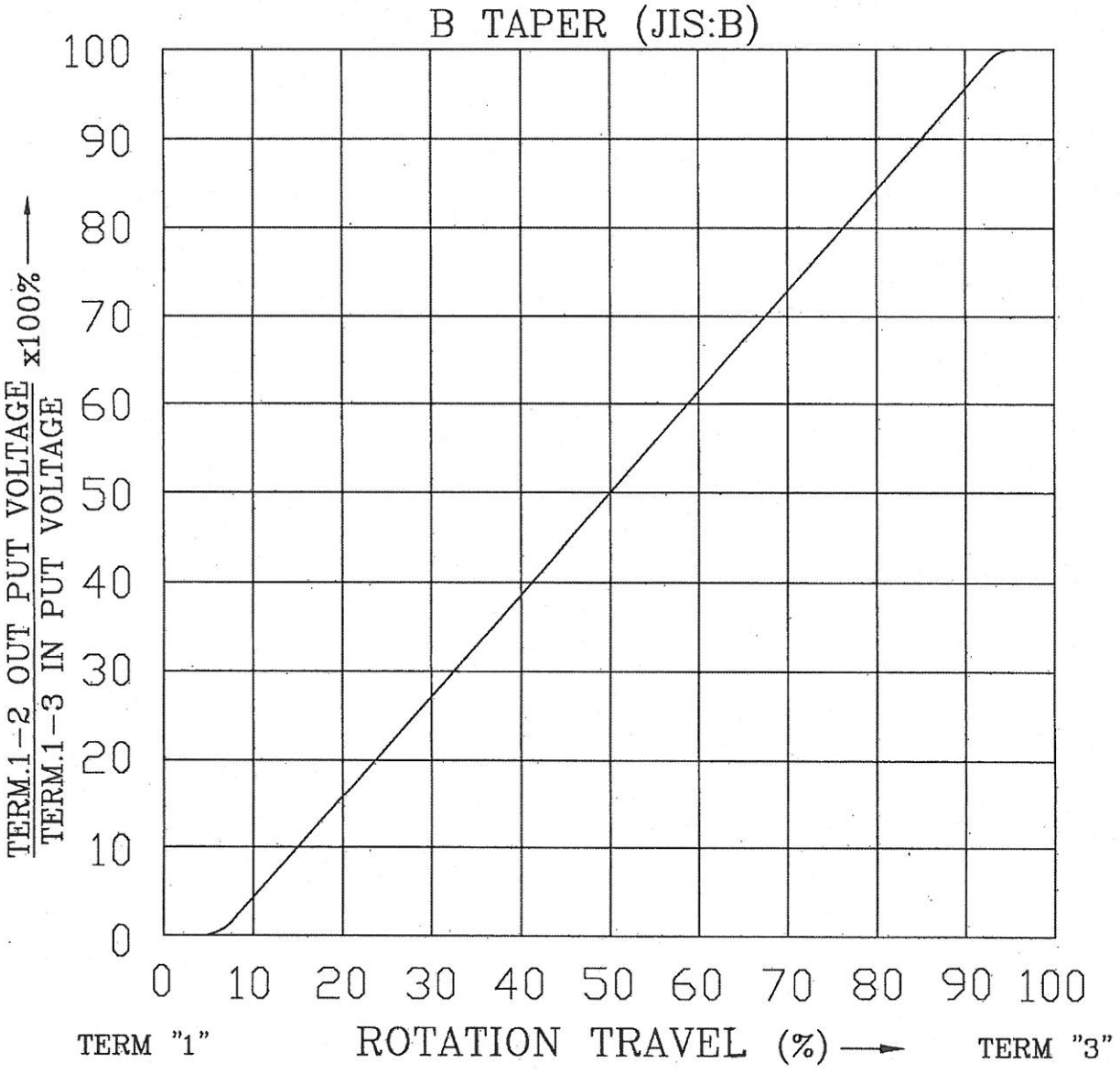

NO.	DATE	DESCRIPTION	MODEL NAME

TOL. UNLESS OTHERWISE STATED	DIMENSION	SCALE	DRAWN BY	CHECKED BY	APPROVED BY	DRAWING NO.
less than 10 ±0.3 above 10 ~ 30 ±0.5 above 30 ~100 ±1.0 above ±5°	mm		何 90.8.21 建志	王 90.8.21 茂松	王 90.8.21 茂松	

TAIWAN ALPHA ELECTRONIC CO., LTD.

可變電阻無鉛焊錫與保管條件共通規格書

Common Specification of Lead-Free Soldering and Storage conditions for Potentiometers

以下焊錫條件以可變電阻置於單層 1.6mm 厚度之印刷電路板上測試爲基準.

The specification below is based on testing results of 1.6mm thickness single layer printed circuit board.

1. 手工焊錫條件：

   For Manual Soldering：

   1-1 操作溫度最高 350°C，操作時間 3 秒以內。

   To be performed within 3 seconds at 350°C or below.

2. 自動或半自動機台焊錫條件：

   For Automated or Semi-Automated Soldering Equipments:

   2-1 使用發泡式且比重 0.82 以上的助焊劑，發泡高度以印刷電路板厚度一半爲標準，且助劑不能流入可變電阻基板表面及印刷電路板表面。

   Flux of 0.82 specific gravity, applied by foam fluxer, shall be used. Foam head shall be limited to the height which is half thickness of printed circuit board to be soldered. No flux should be allowed to run up onto resistive element board of potentiometer and the surface of printed circuit board.

   2-2 預熱時間不超過兩分鐘，焊錫接面 (即印刷電路板底) 最高預熱溫度不超過 100°C。

   Regarding preheating, the entire flow duration should not exceed 2 minutes, and soldering surface temperature (undersurface of PCB) shall be settled within 100°C.

   2-3 焊錫過程機台設定溫度在 260°C 以下、 4 秒以內。

   Solder Dipping is to be performed within 4 seconds at 260°C or below.

3. 若回轉型電位器是塑膠軸且帶有檔位，請將主軸先調整至其中一個檔位或中心檔位上才可以進行焊錫作業。

   For rotary potentiometer with plastic shaft which have centre detent or multiple detents, the shaft should be settled in relevant detent position prior to soldering process.

4. 手工焊錫、自動或半自動機台焊錫不得超過一回。

   Regardless of soldering facility and method, solder dipping or solder smearing must not be carried out more than 1 time.

註: 本項焊錫溫度條件不適用於回流焊接作業設備。

Remarks: This specification is not recommended for and applicable in reflow soldering.

焊錫注意事項:

Caution for soldering:

如圖所示，請避免 PCB 上層表面有焊錫

Please avoid soldering on upper surface of P.C.B. as shown.

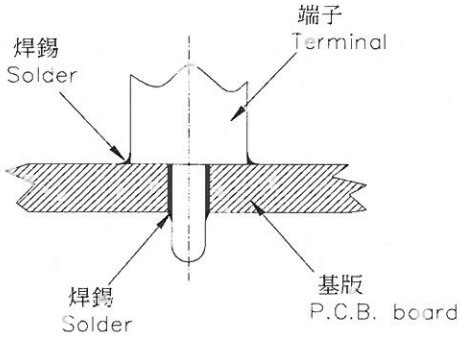

5. 保管條件(Storage conditions):

產品需儲存在原始的包裝,以及保持常溫常濕、避免陽光直射、遠離任何腐蝕性氣體.
產品需盡快完全地使用完,建議最慢不要超過交貨後 6 個月. 產品經拆封後, 全部的數量都需迅速地使用完.

The products shall be stored in the original packaging and kept at room temperature and humidity, out of direct sunlight, and away from any and all corrosive gas. The products shall be completely used as soon as possible, but no longer than 6 months from the date of delivery. Once product packaging is opened, the complete quantity of such products shall be promptly used.

Компания «ЭлектроПласт» предлагает заключение долгосрочных отношений при поставках импортных электронных компонентов на взаимовыгодных условиях!

Наши преимущества:

- Оперативные поставки широкого спектра электронных компонентов отечественного и импортного производства напрямую от производителей и с крупнейших мировых складов;
- Поставка более 17-ти миллионов наименований электронных компонентов;
- Поставка сложных, дефицитных, либо снятых с производства позиций;
- Оперативные сроки поставки под заказ (от 5 рабочих дней);
- Экспресс доставка в любую точку России;
- Техническая поддержка проекта, помощь в подборе аналогов, поставка прототипов;
- Система менеджмента качества сертифицирована по Международному стандарту ISO 9001;
- Лицензия ФСБ на осуществление работ с использованием сведений, составляющих государственную тайну;
- Поставка специализированных компонентов (Xilinx, Altera, Analog Devices, Intersil, Interpoint, Microsemi, Aeroflex, Peregrine, Syfer, Eurofarad, Texas Instrument, Miteq, Cobham, E2V, MA-COM, Hittite, Mini-Circuits,General Dynamics и др.);

Помимо этого, одним из направлений компании «ЭлектроПласт» является направление «Источники питания». Мы предлагаем Вам помощь Конструкторского отдела:

- Подбор оптимального решения, техническое обоснование при выборе компонента;
- Подбор аналогов;
- Консультации по применению компонента;
- Поставка образцов и прототипов;
- Техническая поддержка проекта;
- Защита от снятия компонента с производства.

Как с нами связаться

Телефон: 8 (812) 309 58 32 (многоканальный)
Факс: 8 (812) 320-02-42
Электронная почта: org@eplast1.ru
Адрес: 198099, г. Санкт-Петербург, ул. Калинина, дом 2, корпус 4, литера А.