Series 204

Surface Mount Multi-Functional DIP Switch

- Coplanarity: 0.1mm/.004” maximum
- Enclosed actuators shield contacts from foreign particles throughout life of switch
- Available with SPST, SPDT, DPST, 3PST circuitry choices
- Optional top tape seal for board spray washing

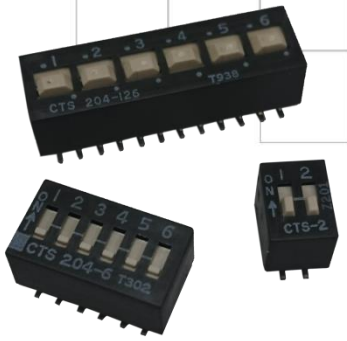

Description

Integral terminal and contact molded into thermoset base provides electrostatic discharge protection rated to 22KV. Optimized gold plated contact design incorporates a dimple wiping interface for long-term contact corrosion resistance.

Ordering Information

Series	Number of Poles	Number of Throws	Number of Switch Positions	Actuator Height	Bottom Epoxy Seal	Top Tape Seal	Tape and Reel	Actuation Preset
204-	1	2	1	E	S	T	R	N

Code	No. of poles
Blank	For SPST
1	Single pole
2	Double poles
3	3 poles
4	4 poles

Code	Spec.
Blank	For SPST
1	Single throw
2	Double throws

Code	No. of switch positions
1	1 position
2	2 positions
3	3 positions
4	4 positions
5	5 positions
6	6 positions
7	7 positions
8	8 positions
9	9 positions
10	10 positions
12	12 positions

Code	Spec.
Blank	Standard (0.89mm/.035”)
E	Extended (3.43mm/.135”) (SPST only)
LP	Low profile (Flush) (SPST&SPDT only)

Code	Bottom epoxy seal
Blank	No epoxy seal
S	Epoxy seal

Code	Top tape seal
Blank	No top tape seal
T	Top tape seal (Not available for 7-position SPST DIP switch)

Code	Spec.
Blank	Anti-static tube packaging
R	Tape and reel packaging (SPST, DPST&3PST only)

Code	Spec.
Blank	Ship at OFF position
N	Ship at ON position (SPST, DPST&3PST only)

Notes: Contact CTS for other common features not listed.

©2019 CTS® Corporation. Information/product(s) subject to change. No warranty that product(s) will meet the stated specifications for customer specific applications or test equipment. Visit www.ctscorp.com for list of applicable patent(s), more information, or to request a quote.

Electrical Specifications

Parameter	Conditions & Remarks	Min	Max	Unit
Circuit	SPST SPDT DPST 3PST	2 1 1 1	12 6 6 4	positions
Contact Resistance	Initial At end of life		50 100	milliohms
Insulation Resistance	Between insulated terminals	1000		megohms
Dielectric Strength	500 VAC between adjacent switches		1	minute
Actuation Life	50mA @ 24 VDC		5,000	cycles
Switch Capacitance	Between adjacent closed switches		5.0	pF
Nonswitching Rating			100 or 50	mA or VDC
Coplanarity			0.1 0.004	mm inch

Mechanical and Environmental

Soldering	Maximum reflow temperature, 250°C for 30 seconds
MSL	Level 1
RoHS	Lead-Free. Fully compliant to RoHS Directive 2011/65/EU
Shock	Per MIL-STD-202F, method 213B, condition A(50G's) with no contact inconsistencies greater than 1 microsecond
Vibration	Per MIL-STD-202F, method 204D, condition B (.06" or 15G's between 10 HZ to 2K HZ) with no contact inconsistencies greater than 1 microsecond
Seal	Bottom epoxy seal Top tape seal optional
Marking	Special side or top marking available-consult CTS
Packaging:	Standard anti-static tube packaging, optional tape and reel packaging
Operating Temperature Range	-40°C to +85°C
Storage Temperature Range	-55°C to +85°C

Soldering Profile

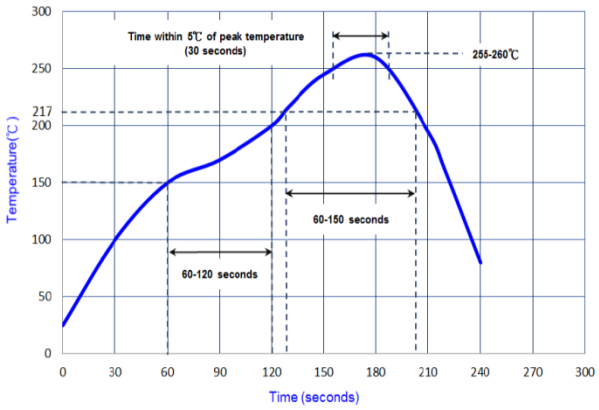

©2019 CTS® Corporation. Information/product(s) subject to change. No warranty that product(s) will meet the stated specifications for customer specific applications or test equipment. Visit www.ctscorp.com for list of applicable patent(s), more information, or to request a quote.

Mechanical Specifications

Figure 1 - SPST

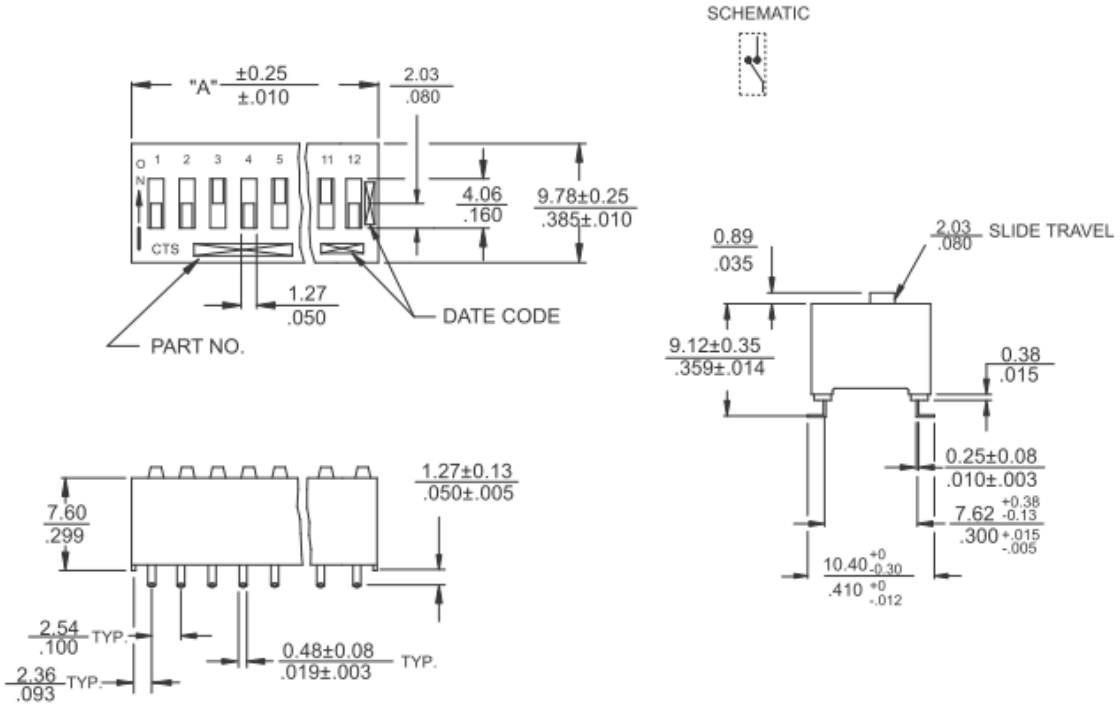

DIMENSION: mm / inch

"A" Overall Dimension	No. of Switch Positions	Part No .
7.26 / .286	2	204-2
9.80 / .386	3	204-3
12.34 / .486	4	204-4
14.88 / .586	5	204-5
17.42 / .686	6	204-6
19.96 / .786	7	204-7
22.50 / .886	8	204-8
25.04 / .986	9	204-9
27.58 / 1.086	10	204-10
32.66 / 1.286	12	204-12

©2019 CTS® Corporation. Information/product(s) subject to change. No warranty that product(s) will meet the stated specifications for customer specific applications or test equipment. Visit www.ctscorp.com for list of applicable patent(s), more information, or to request a quote.

Figure 2 – SPDT/DPST

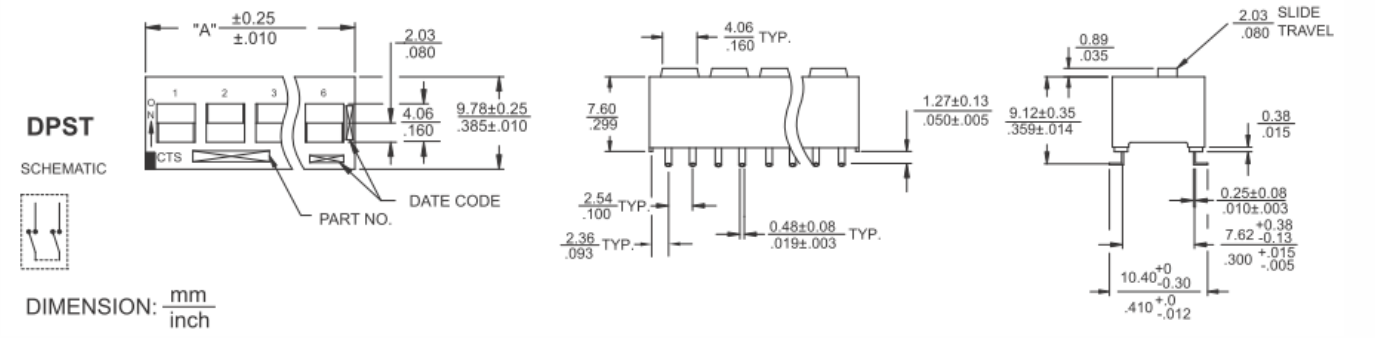

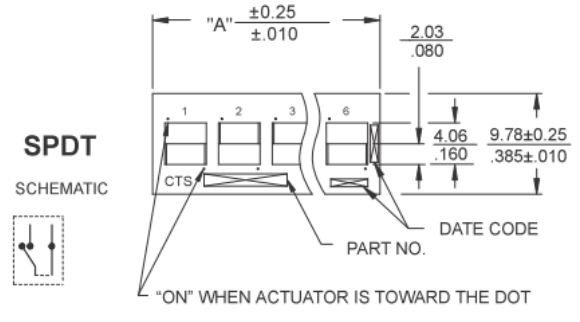

Ordering Information
SPDT/DPST Switches

"A" Overall Dimension	Number of Switch Positions	Actuation	Part No.
7.26 / .286	1	SPDT/DPST	204-121/204-211
12.34 / .486	2	SPDT/DPST	204-122/204-212
17.42 / .686	3	SPDT/DPST	204-123/204-213
22.50 / .886	4	SPDT/DPST	204-124/204-214
27.58 / 1.086	5	SPDT/DPST	204-125/204-215
32.66 / 1.286	6	SPDT/DPST	204-126/204-216

Figure 3 - 3PST

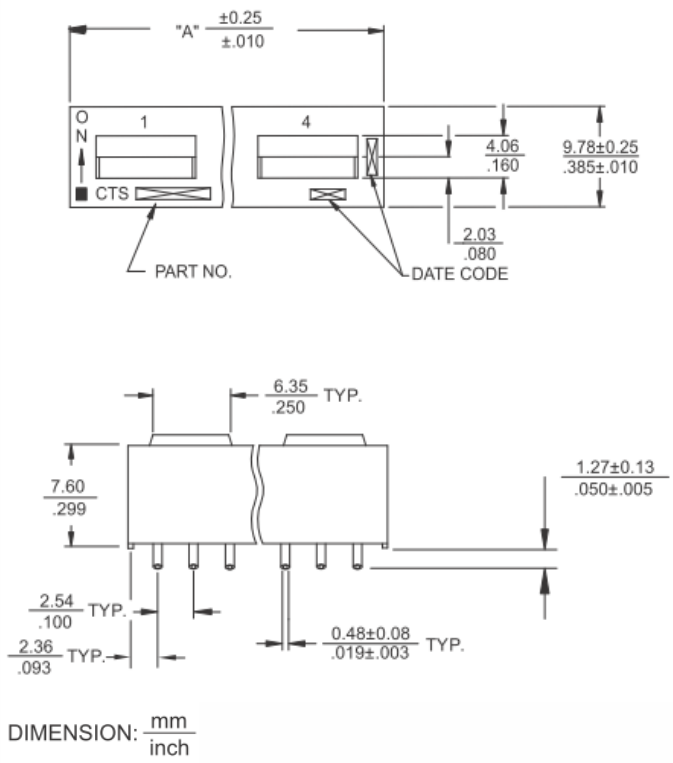

SCHEMATIC

Ordering Information
3PST Switches

"A" Overall Dimension	No. of Switch Positions	Actuation	Part No.
9.80 / .386	1	3PST	204-311
17.42 / .686	2	3PST	204-312
25.04 / .986	3	3PST	204-313
32.66 /1.286	4	3PST	204-314

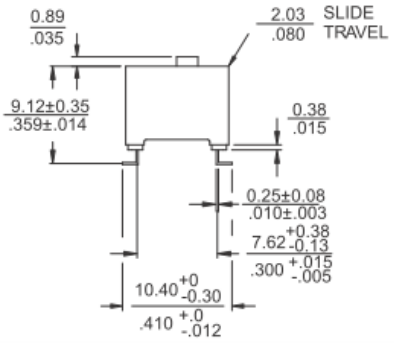

©2019 CTS® Corporation. Information/product(s) subject to change. No warranty that product(s) will meet the stated specifications for customer specific applications or test equipment. Visit www.ctscorp.com for list of applicable patent(s), more information, or to request a quote.

Figure 4 – Low Profile Actuators (SPST&SPDT only)

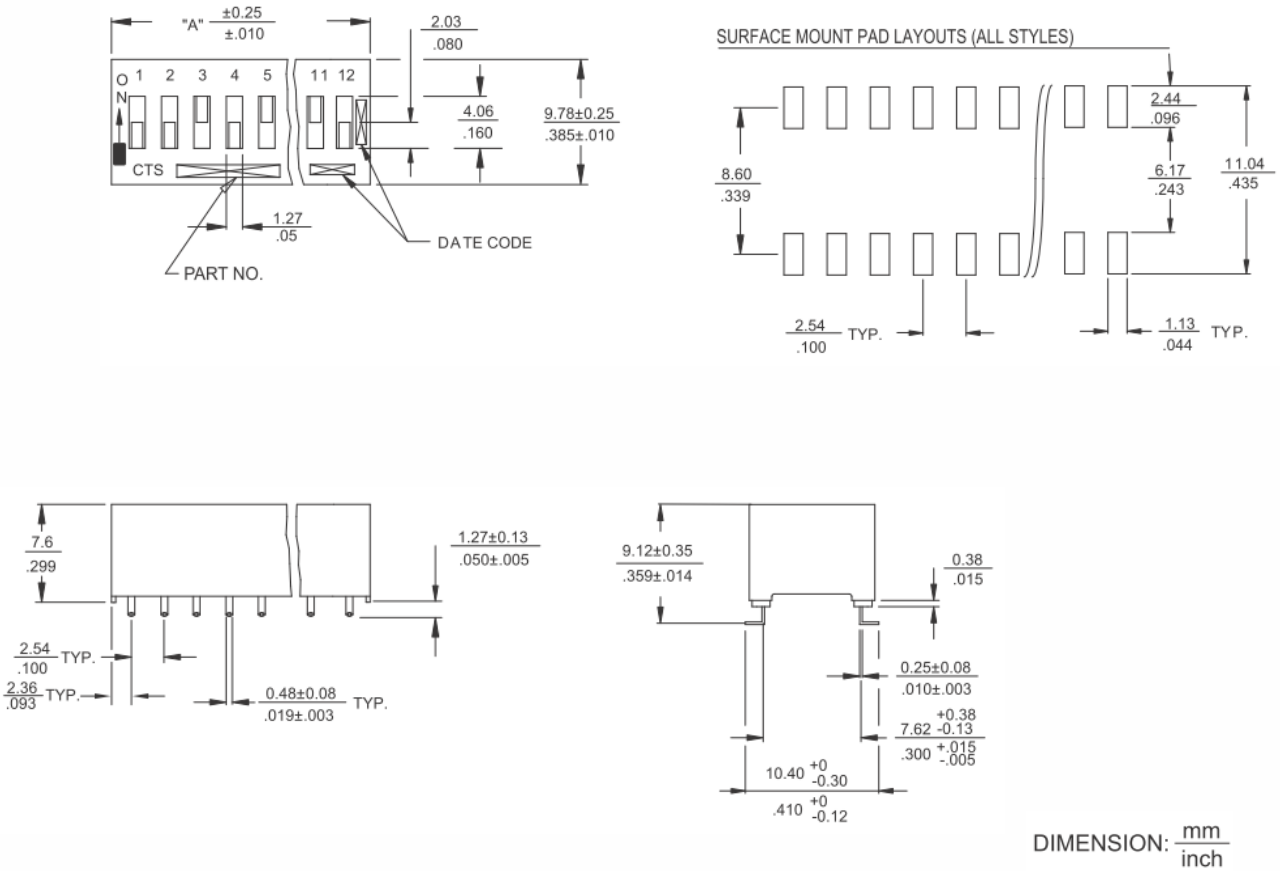

Packing: Tape and Reel

Unit: mm

SW Section	Fig	Bo	W	F	S
2	I	7.15	24.0	11.50	-
3	I	9.69	24.0	11.50	-
4	I	12.23	24.0	11.50	-
5	II	14.81	32.0	14.20	28.4
6	II	17.35	32.0	14.20	28.4
8	II	22.40	44.0	20.20	40.4
12	II	32.56	44.0	20.20	40.4

©2019 CTS® Corporation. Information/product(s) subject to change. No warranty that product(s) will meet the stated specifications for customer specific applications or test equipment. Visit www.ctscorp.com for list of applicable patent(s), more information, or to request a quote.

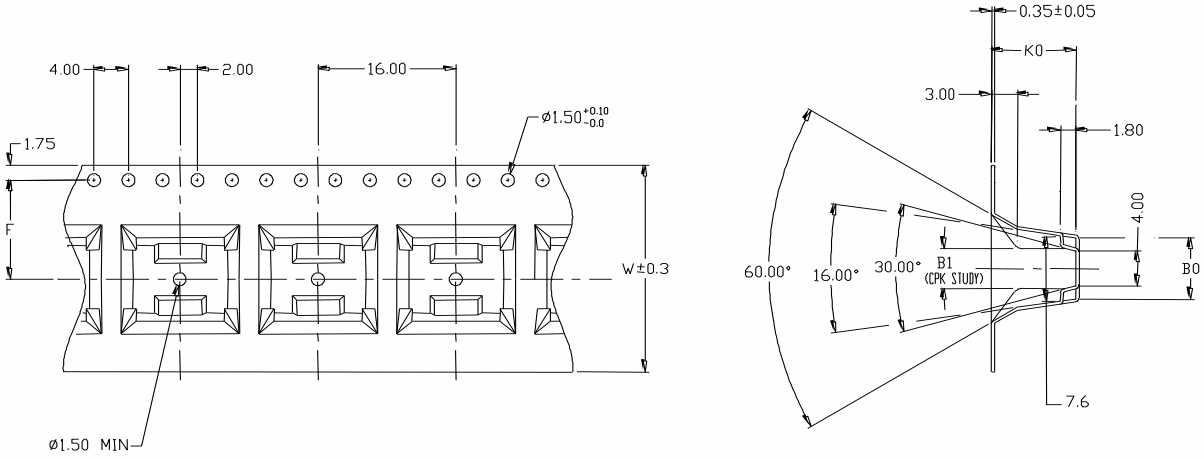

FIG I

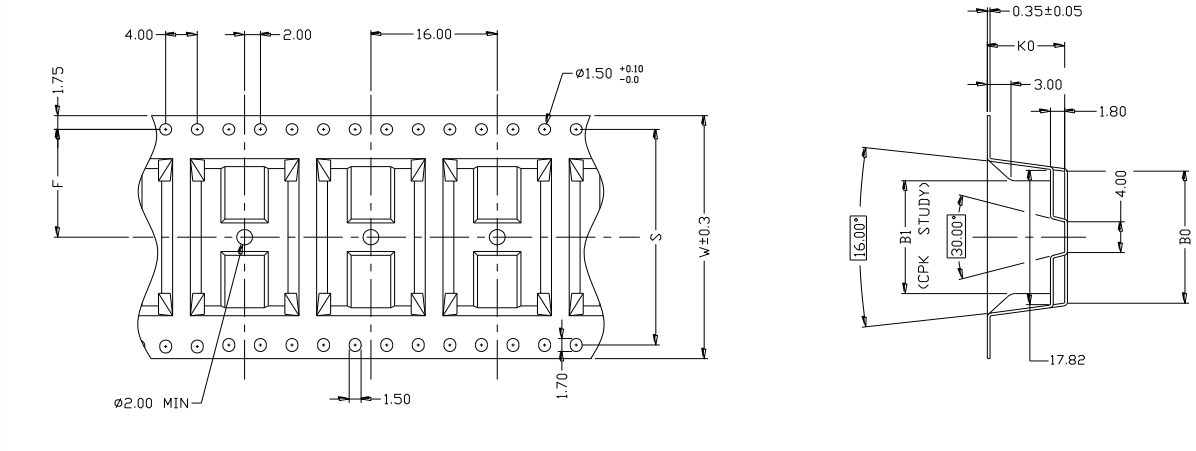

FIG II

SPECIFIED REEL PARTS DIMENSIONS:

Unit: mm

SW Section	W1	W2	W3
2~4	24.4	30.4 MAX.	23.9 MIN./27.4 MAX.
5~6	32.4	38.4 MAX.	31.9 MIN./35.4 MAX.
8	44.4	50.4 MAX.	43.9 MIN./47.4 MAX.
12	44.4	50.4 MAX.	43.9 MIN./47.4 MAX.

©2019 CTS® Corporation. Information/product(s) subject to change. No warranty that product(s) will meet the stated specifications for customer specific applications or test equipment. Visit www.ctscorp.com for list of applicable patent(s), more information, or to request a quote.

(SEE PICTURE FIG)

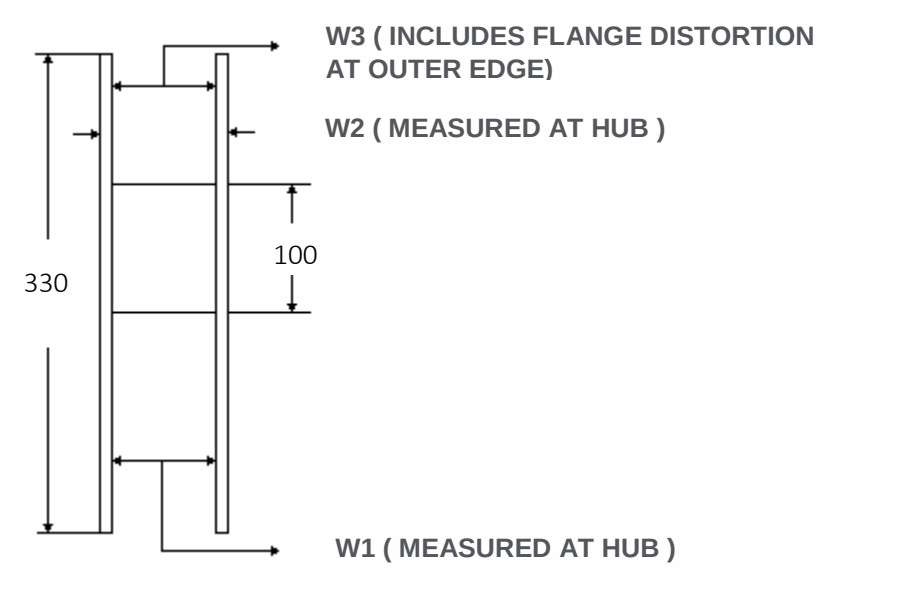

1. TAPE SPROCKET HOLE PITCH : 4.0 ± 0.1MM
2. ALL SMT ASSEMBLING MACHINES WILL PICK-UP THE COMPONENT FROM THE POINT, WHICH
3. IS LOCATED IN THE CENTRE OF TWO ADJACENT SPROCKET HOLES IN FEEDING DIRECTION. THIS MUST BE TAKEK INTO ACCOUNT WHEN DESIGNING THE LOCATION OF THE COMPONENT IN T&R POCKET.
4. RECOMMENDED PART ORIENTATION IN TAPE & REEL POCKET.

ORIENT SWITCH TERMINAL #1 TO THE SIDE OF ROUND SPROCKET HOLES, SEE PICTURE BELOW.

LENGTH OF TAPE

5. THERE SHALL BE A LEADER OF 390mm MINIMUM WHICH IS SEALED ONTO EMPTY CARRIER TAPE, SEE PICTURE BELOW.

©2019 CTS® Corporation. Information/product(s) subject to change. No warranty that product(s) will meet the stated specifications for customer specific applications or test equipment. Visit www.ctscorp.com for list of applicable patent(s), more information, or to request a quote.

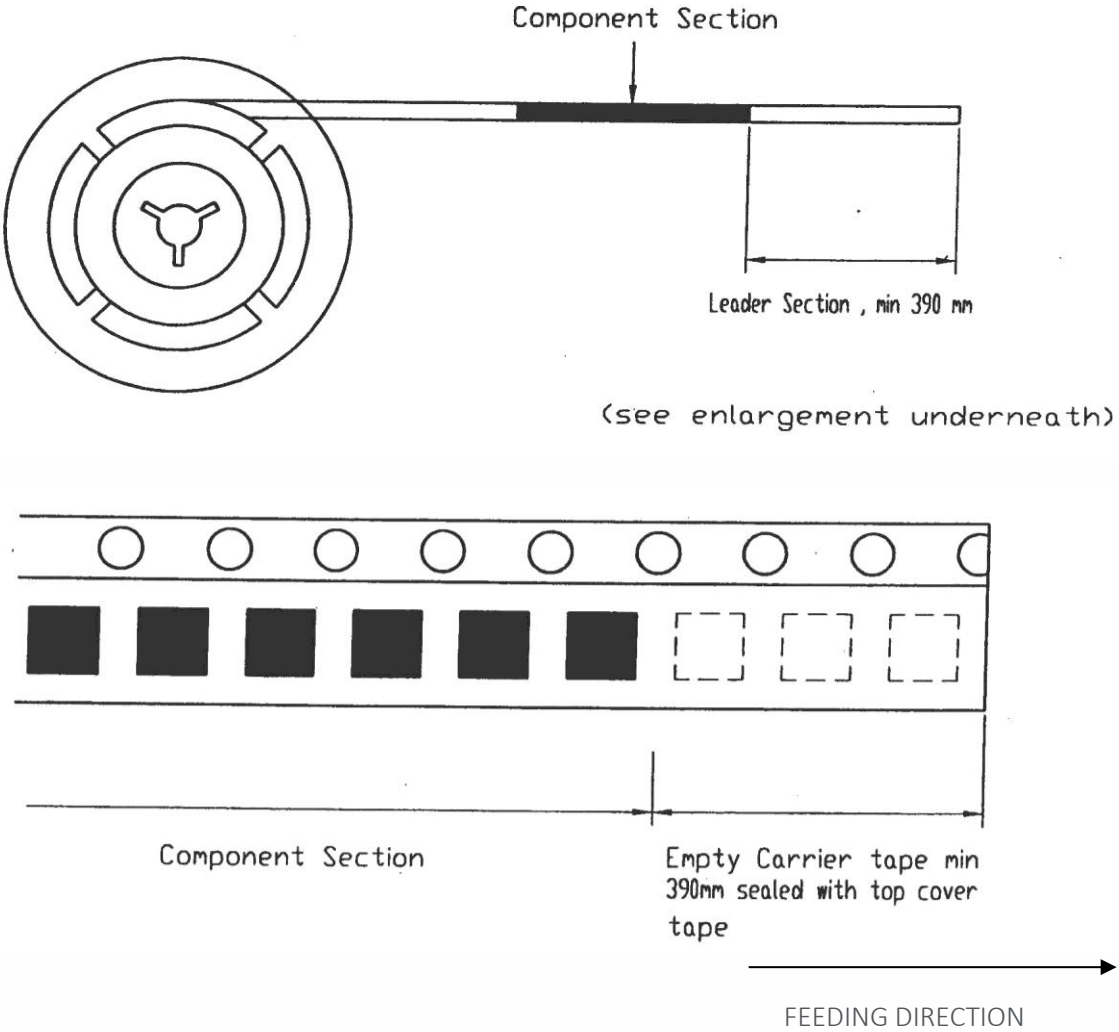

©2019 CTS® Corporation. Information/product(s) subject to change. No warranty that product(s) will meet the stated specifications for customer specific applications or test equipment. Visit www.ctscorp.com for list of applicable patent(s), more information, or to request a quote.

Компания «ЭлектроПласт» предлагает заключение долгосрочных отношений при поставках импортных электронных компонентов на взаимовыгодных условиях!

Наши преимущества:

- Оперативные поставки широкого спектра электронных компонентов отечественного и импортного производства напрямую от производителей и с крупнейших мировых складов;
- Поставка более 17-ти миллионов наименований электронных компонентов;
- Поставка сложных, дефицитных, либо снятых с производства позиций;
- Оперативные сроки поставки под заказ (от 5 рабочих дней);
- Экспресс доставка в любую точку России;
- Техническая поддержка проекта, помощь в подборе аналогов, поставка прототипов;
- Система менеджмента качества сертифицирована по Международному стандарту ISO 9001;
- Лицензия ФСБ на осуществление работ с использованием сведений, составляющих государственную тайну;
- Поставка специализированных компонентов (Xilinx, Altera, Analog Devices, Intersil, Interpoint, Microsemi, Aeroflex, Peregrine, Syfer, Eurofarad, Texas Instrument, Miteq, Cobham, E2V, MA-COM, Hittite, Mini-Circuits,General Dynamics и др.);

Помимо этого, одним из направлений компании «ЭлектроПласт» является направление «Источники питания». Мы предлагаем Вам помощь Конструкторского отдела:

- Подбор оптимального решения, техническое обоснование при выборе компонента;
- Подбор аналогов;
- Консультации по применению компонента;
- Поставка образцов и прототипов;
- Техническая поддержка проекта;
- Защита от снятия компонента с производства.

Как с нами связаться

Телефон: 8 (812) 309 58 32 (многоканальный)
Факс: 8 (812) 320-02-42
Электронная почта: org@eplast1.ru
Адрес: 198099, г. Санкт-Петербург, ул. Калинина, дом 2, корпус 4, литера А.