Amphenol® Tri-Start™ Subminiature Cylindrical Connectors

12-092-14

MIL-DTL-38999, Series III

- **Aluminum**
- **Stainless Steel/Firewall**
- **Composite**
- **Clutch-Lok® High Vibration**

Amphenol

Table of Contents

Page No.

Series III - The Highest Performance MIL-DTL-38999 Connector 1
Tri-Start Series III Versatility and Options 2
Shell Styles and Key Design Features 3
Test Data 4
Specifications 5
Insert Availability and Identification 6, 7
Alternate Positioning 8
Insert Arrangements 9-15
Crimp
- TVP00R/CTVP00R Wall Mounting Receptacle 16
- TVP02R/CTVP02R Box Mounting Receptacle 17
- TV06R/CTV06R Straight Plug 18
- TV26/MTV26 CLUTCH-LOK® Straight Plug 19
- TV07R/CTV07R Jam Nut Receptacle 20
- TV01R/CTV01R Line Receptacle 21
- TV09R Flange Mounting Plug 22

Hermetic
- TVPS02Y Box Mounting Receptacle 23
- TVS07Y Jam Nut Receptacle 24
- TVSIY Solder Mounting Receptacle 25
- TVSHIY Weld Mounting Recepacle 26

Fail Safe, Lanyard Release
- Design Features, Types 27
- D38999/29, D38999/30 Lanyard Release Plug 28-30
- D38999/31 TV Fail Safe Lanyard Release Plug for MIL-STD-1760 ..... 31, 32
- Accessories for Lanyard Release Connectors 33

Accessories
- Receptacle Protection Caps 34
- Plug Protection Caps 35
- Dummy Receptacles 36
- Cable Clamps 37
- Universal Header Assembly for Flex Print or PC Board Connectors 38, 39

Contacts, Sealing Plugs, Plastic/Metal Protection Caps 40
Contacts (Printed Circuit Board, Wire wrap) 41
Application Tools 42
How to Order
- Amphenol® TV, Metal and Amphenol® TV26 CLUTCH-LOK® 43
- D38999, TV Military, Metal and MTV26 CLUTCH-LOK® 44
- Amphenol® CTV, Composite 45
- D38999, CTV Military, Composite 46

Composite Weight Comparisons 47
Specials (Fiber Optics, Filter Protection, Flex Assemblies, PCB Applications) 48
Specials (Coax, Twinax, Triax Contacts, Ground Plane Connectors, Press Fit Connectors) 49
Specials (Quadrax Contacts) 50
Specials (Deep Reach Shells, Stand-off Flange Shells, Connectors with Integral Strain Reliefs, ESD Protection, RJ Field Connectors 51
Sales Office and Distributor Listing 52

For additional information concerning Amphenol Tri-Start Connectors, or if there are special application requirements, contact your local sales office or

Amphenol Aerospace
40-60 Delaware Ave.
Sidney, New York 13838-1395
Phone: 607-563-5011 Fax: 607-563-5157
www.amphenol-aerospace.com

Amphenol Aerospace is a Certified ISO9001 Manufacturer.

Amphenol® Tri-Start

Series III - the highest performance MIL-DTL-38999 connector

Tri-Start™ MIL-DTL-38999 Series III with Metal Shells - Aluminum, Stainless Steel, Class K Firewall

Amphenol® Tri-Start MIL-DTL-38999* Series III Connectors offer the highest performance capabilities for both general duty and severe environment applications. Meeting or exceeding MIL-DTL-38999 Series III requirements, the Tri-Start connector with standard metal shells (aluminum or stainless steel with several finish options) offers these features:

- **EMI Shielding** - solid metal to metal coupling, grounding fingers, electroless nickel plating, and thicker wall sections provide superior EMI shielding capability of 65dB minimum at 10 GHz
- **Contact Protection -** recessed pins in this 100% scoop-proof connector minimize potential contact damage
- **Moisture Resistance -** improved interfacial seal design helps prevent electrolytic erosion of contacts
- **Corrosion Resistance -** shells of stainless steel or cadmium over nickel plating withstand a 500 hour salt spray exposure
- **Vibration/Shock -** operates under severe high temperature vibration, through 200°C
- **Firewall Capability -** available in a stainless steel shell, class RK, RS
- **Lockwiring Eliminated -** unique, self-locking, quick coupling connector eliminates lockwiring
- **Quick Coupling -** completely mates and self-locks in a 360° turn of the coupling nut
- **Inventory Support Commonality -** uses standard MIL-DTL-38999 contacts, application tools, insert arrangements
- **Electrostatic Discharge Protection (ESD) -** protection for sensitive circuitry without diodes, varistors, etc., with the use of the Faraday Cage principal which shunts high voltage, high current discharge events (see page 51)
- **Ground Plane Connectors -** with metallic insert for common grounding of coax, triax or twinax contact outer shield (see page 49)
- **Hermetic-** air leakage limited to 1 X 10^{-7} cm^3 per second optional

* MIL-DTL-38999 Series III supersedes MIL-C-38999 Series III.

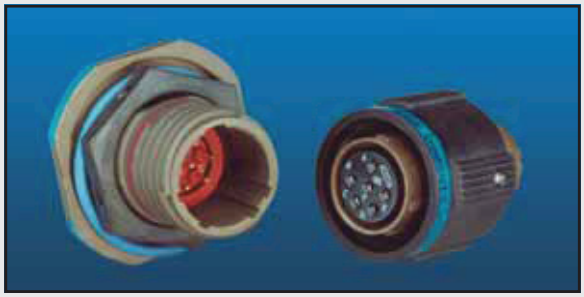

Composite Tri-Start, Qualified to MIL-DTL-38999, Rev. J

MIL-Qualified to MIL-DTL-38999, Rev. K, the Amphenol® Composite Tri-Start Connector offers a lightweight, corrosion resistant connector with the same high performance features as its metal counterpart. The Composite Tri-Start Connector also includes the following features:

- **Lightweight -** 17% – 70% weight savings (17–40% weight savings vs. aluminum) (60–70% weight savings vs. stainless steel) See Composite weight comparison chart, pg. 47.
- **Corrosion Resistance -** available in standard MIL-DTL-38999 olive drab cadmium (175°C) and electroless nickel plating (200°C), both withstanding 2000 hours of salt spray exposure. The base material is able to withstand an indefinite exposure to salt spray.
- **Durability -** 1500 couplings minimum (in reference to connector couplings, not contacts)
- **Extended Life Contact -** Mil-approved plating process which provides 1500 couplings minimum

CLUTCH-LOK™ MIL-DTL-38999 Series III High Vibration Connector

The latest offering from Amphenol in MIL-DTL-38999, the CLUTCH-LOK connector offers:

All advantages of stainless steel/Class K firewall Tri-Start connectors plus a unique clutch design that actually tightens itself under vibration.
Features include:

- High degree of differential torque
- No settling back to the next ratchet tooth
- Completely intermateable with all existing MIL-DTL-38999 Series III connectors
- Offers advantage in inaccessible, hard to reach areas where mating torque is difficult to apply and complete coupling is not verifiable by inspection

See page 19 for description, 43 and 44 for ordering.

Amphenol® Tri-Start
offers more versatility & options than any other interconnection family

The Tri-Start Connector is the high performance choice in the D38999 Family.

Originally designed in order to increase the performance levels of MIL-DTL-38999 Series I and II, the Series III was created to meet high performance connector criteria.

Dynamic features for performance and reliability that were needed for military, aerospace and ground vehicle applications were designed into the Series III that include:

- Rapid coupling via a triple-start thread
- Shell-to-shell or metal-to-metal bottoming
- Improved EMI shielding

The Tri-Start Family of connectors has grown and expanded since its original addition to the 38999 series in order to meet ever-evolving interconnection product needs. Today, the Tri-Start family has styles and options that cover a very wide range to meet not only the highest performance needs of space applications, but also general duty connector needs.

The Tri-Start Connector Series is second to none in terms of versatility and customer options.

The broad porfolio includes Tri-Starts with:

- Aluminum and nickel plated stainless steel shells
- Class K Firewalls
- Composite shells
- Clutch-Lok® high vibration design
- Fiber Optics
- Fail-Safe Lanyard Release connectors
- Variety of contact options: shielded, coax, matched impedance coax, triax, twinax, quadrax, thermocouple, PCB tail and wire wrap
- Ground plane versions and Press-fit® with compliant pins
- ESD (Electrostatic Discharge) protection
- Filter/Transient protection
- Hermetic versions
- Long reach receptacle styles
- Numerous shell geometries, finishes and accessories

See more on Tri-Start specials on pages 48-51.

Hermetic Tri-Start
MIL-DTL-38999 Series III

MIL-DTL-38999 Lanyard "Breakaway" Connector Qualified for MIL-STD-1760

Fiber Optic Multi-Channel D38999

MIL-DTL-38999 with Shielded Coax Contacts

D38999 Ground Plane with Metallic Insert, Power Contacts and Shielded Twinax Contacts

Filter/Transient Protection
MIL-DTL-38999 Series III

D38999 with Flex Termination for Attachment to PCB Boards

D38999 with PC Tail Coax Contacts and Alignment Disc

Amphenol® Tri-Start
shell styles and key design features

Wall Mount Receptacle

Straight Plug

Box Mount Receptacle

Flange Mounting Plug

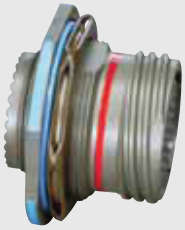
Jam Nut Receptacle

Lanyard Release Plug

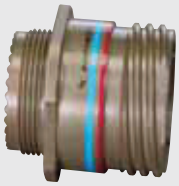
Line Receptacle

Longer Shell Receptacle

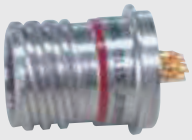
Solder Mount Hermetic Receptacle

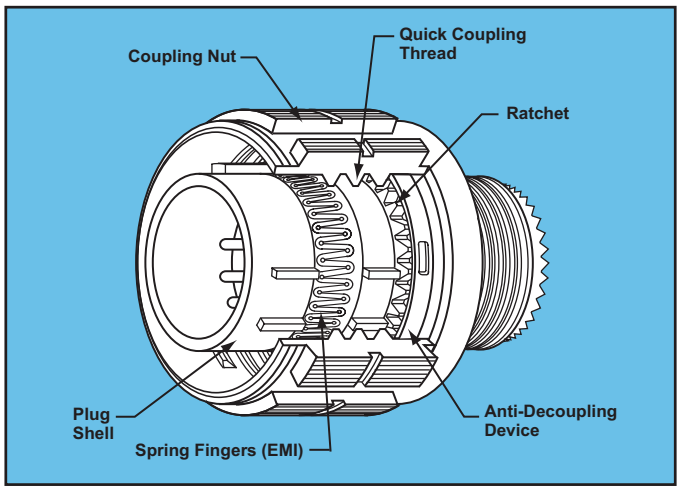

Designed for Performance

Numerous advantages in performance capability are designed into the Amphenol Tri-Start Connector. A positive metal to metal coupling design, grounding fingers, and electroless nickel plating provide superior EMI shielding capability of 65 dB minimum at 10 GHz.

Acme threads provide coupling durability. Thicker wall sections and a greater coupling surface area improve strength and shock resistance. Blunting of the thread on both the coupling nut and receptacle eliminates cross coupling. The connector quickly mates and self locks in a 360° turn of the coupling nut.

Elongated mounting holes permit the Tri-Start Connector to intermount with various existing MIL-spec box or wall mount receptacles, giving it a design replacement advantage.

Shells of stainless steel, or cadmium over nickel plating prevent severe corrosion. Resistance is tested through exposure to a 500 hour salt spray. Composite versions provide protection from salt spray exposure for 2000 hours. Other finish options are available; see how to order Tri-Start metal and Tri-Start Composite.

Recessed pins minimize potential contact damage in this 100% scoop-proof connector. In a blind mating application, mating shells cannot “scoop” the pins and cause a shorting or bending of contacts.

The design of the Amphenol Tri-Start interfacial seal meets the MIL-DTL-38999 Series III requirements for electrolytic erosion resistance.

A rigid dielectric insert with excellent electrical characteristics provides durable protection to the contacts. The socket contacts are probe proof, and all contacts are rear removable. They are plated in the standard 50 micro inches minimum gold, with 100 micro inches as an option and are available in standard Tri-Start insert arrangements and special Pyle® insert arrangements in sizes 10 power, 12, 16, 20 and 22D contacts. Special insert patterns are also available with larger contacts in sizes 4 and 0.

Applicable Patents:
Tri-Start™ Connector Patent 4,109,990.
Composite Connector Patents:
4,268,103; 4,648,670; 4,682,832; 4,703,987.
Clutch-Lok® Patent 6,152,753.

Tri-Start
test data

TRI-START, SERIES III
TYPICAL SHIELDING EFFECTIVENESS TEST DATA
EMI/EMP SHIELDING EFFFECTIVENESS dB
TESTING BY TRIAXIAL METHOD

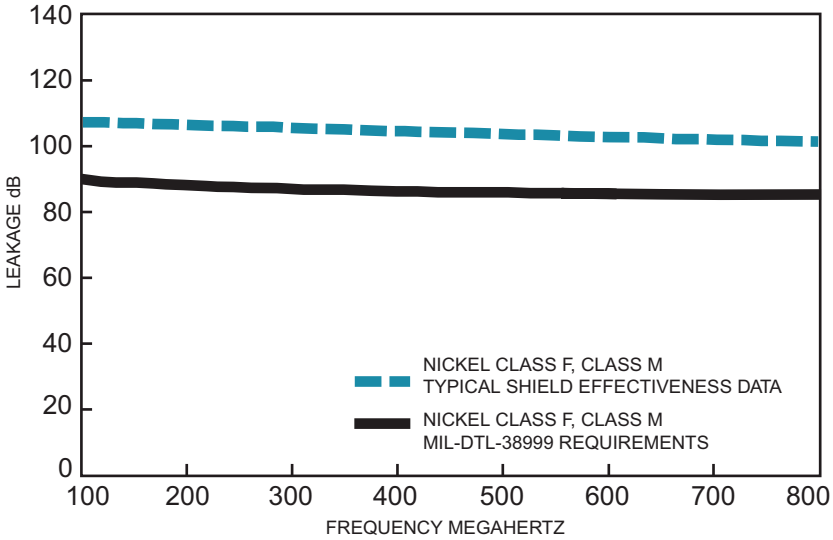

TRI-START, SERIES III
TYPICAL SHIELDING EFFECTIVENESS TEST DATA
EMI/EMP SHIELDING EFFFECTIVENESS dB
TESTING BY MODE STIRRING METHOD

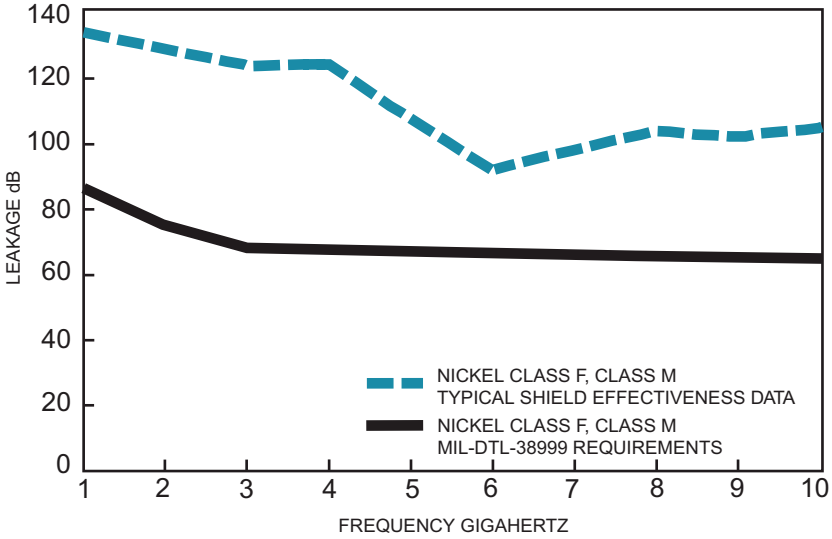

Test data beyond 2GHz is subject to equipment variation.

Amphenol® Tri-Start connectors provide EMI/EMP shielding capability which exceeds MIL-DTL-38999 Series III requirements.

The TV and CTV Series III connector with standard solid metal to metal coupling, EMI grounding fingers and conductive finishes has proven to be the ultimate in EMI/EMP shielding effectiveness. The charts illustrate shielding effectiveness data which is typical of Tri-Start connectors tested with the nickel finish (Class F-metal, Class M-composite) over a wide frequency range.

The vibration capability of the Tri-Start Series is shown in the chart below. This illustrates the most severe vibration envelope of *any* qualified connector available today.

These capabilities along with a 200°C temperature rating and superior moisture sealing protection provide the user with a connector that can withstand the most rigorous application.

TRI-START
VIBRATION CRITERIA

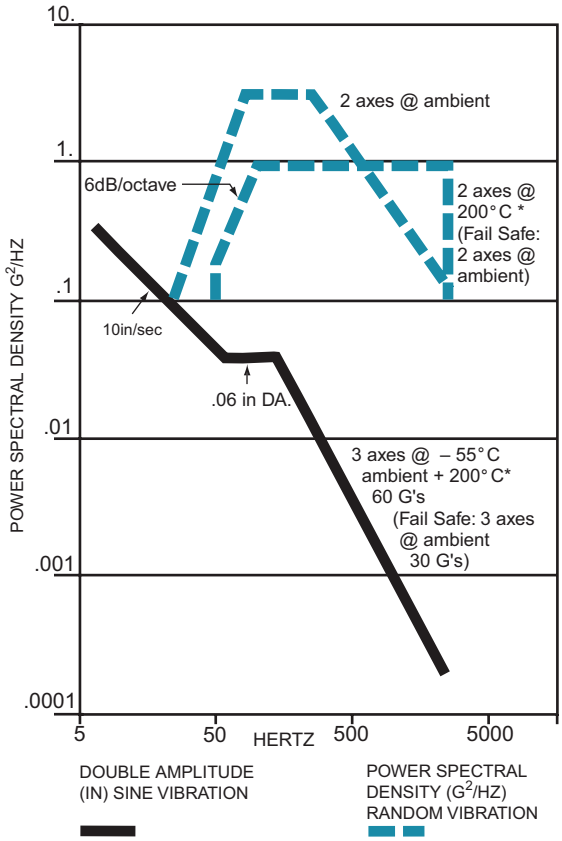

* Dependant on shell finish

NOTE: for test data information on the new Clutch-Lok Tri-Start, high vibration connectors, consult Amphenol Aerospace.

Tri-Start
specifications

CONTACT RATING

Contact Size	Test Current (Amps)		Maximum Millivolt Drop Crimp*	Maximum MIllivolt Drop Hermetic*
	Crimp	Hermetic		
22D	5	3	73	85
20	7.5	5	55	60
16	13	10	49	85
12	23	17	42	85
10 (Power)	33	NA	33	NA
8 (Power)	46	NA	26	NA
4	80	NA	23	NA
0	150	NA	21	NA

* When using silver plated wire.

Contact Size	Crimp Well Data		Hermetic Data	
	Well Diameter	Nominal Well Depth	Well Diameter	Min. Well Depth
22D	.0345 ± .0010	.141	.036 + .004 – .000	.094
20	.047 ± .001	.209	.044 + .004 – .000	.125
16	.067 ± .001	.209	.078 + .004 – .002	.141
12	.100 ± .002	.209	.116 + .004 – .002	.141
10 (Power)	.137 ± .002	.355	NA	NA
8	.181 ± .002	.490	NA	NA
4	.281 ± .002	.490	NA	NA
0	.453 ± .002	.585	NA	NA

SERVICE RATING

Service Rating	Suggested Oper. Voltage (Sea Level)		Test Voltage (Sea Level)	Test Voltage 50,000 Ft.	Test Voltage 70,000 Ft.	Test Voltage 110,000 Ft.
	AC (RMS)	DC				
M	400	550	1300 VRMS	550 VRMS	350 VRMS	200 VRMS
N	300	450	1000 VRMS	400 VRMS	260 VRMS	200 VRMS
I	600	850	1800 VRMS	600 VRMS	400 VRMS	200 VRMS
II	900	1250	2300 VRMS	800 VRMS	500 VRMS	200 VRMS

Please note that the establishment of electrical safety factors is left entirely in the designer's hands, since he is in the best position to know what peak voltage, switching surges, transients,etc. can be expected in a particular circuit.

FINISH DATA

Non-Hermetic Shell Components		
Finish	Service Class	
	Military	Proprietary
Anodic Coating (Non-Conductive)	C	RX**
Electroless Nickel	F (Metal)	RF
	M (Composite)	
Olive Drab Cadmium Plate Nickel Base	W (Metal)	RW
	J (Composite)	
Stainless Steel with Nickel Plate	S	RS
Stainless Steel	K	RK

** Add Suffix (005) to part number.

Hermetic Shell Components		
Material / Finish	Service Class	
	Military	Proprietary
Stainless Steel	Y	Y
Stainless Steel with Nickel Plate	N	YN

Tri-Start
insert availability and identification

AMPHENOL TRI-START INSERT ARRANGEMENTS

Shell Size/Arrg.	Military Shell	Crimp	Hermetics*	Service Rating	Total Contacts	Contact Size 22D	20	16	12	12 (Coax)	10 (Power)	8 (Coax)	8†† (Twinax)
9-5★■	A			Grounded	1								1
9-35	A	X	P	M	6	6							
9-94 ■	A	✦		M	2		2						
9-98	A	X	P	I	3		3						
11-2★	B	✦		I	2			2					
11-5	B	✦	P	I	5		5						
11-35	B	X	P	M	13	13							
11-54 ■	B	X		II	4	4							
11-98	B	X	P	I	6		6						
11-99	B	X		I	7		7						
13-4★	C	X	P	I	4			4					
13-8	C	X	P	I	8		8						
13-13 ■	C			I, Fiber Optic	4			2**	2				
13-35	C	X	P	M	22	22							
13-98	C	X	P	I	10		10						
15-4 ■	D	✦		I	4				4				
15-5★	D	X	P	II	5			5					
15-15	D	X	P	I	15		14	1					
15-18	D	X	P	I	18		18						
15-19	D	✦	P	I	19		19						
15-35	D	X	P	M	37	37							
15-97	D	X	P	I	12		8	4					
17-2	E	X		M	39	38							1
17-6	E	X	P	I	6				6				
17-8★	E	X	P	II	8			8					
17-22★■	E	✦		Coax	4					2		2	
17-26	E	X	P	I	26		26						
17-35	E	X	P	M	55	55							
17-99	E	X		I	23		21	2					
19-11★	F	X	P	II	11			11					
19-18	F	X		M	18	14							4
19-28	F	X		I	28		26	2					
19-31 ■	F	✦		M	15	12			1			2	
19-32	F	X	P	I	32		32						
19-35	F	X	P	M	66	66							
21-11★	G	X		I	11				11				
21-16★	G	X	P	II	16			16					
21-29 ■	G	X		I	27		19	4	4				
21-35	G	X	P	M	79	79							
21-39	G	X	P	I	39		37	2					
21-41	G	X	P	I	41		41						
21-75★ ✧	G	X		M	4							4	(See note)
21-79 ■	G	X		II	19	17						2	
23-6 ★■	H	P		M	6								6
23-14 ■	H	✦		I	14				14				
23-21★	H	X	P	II	21			21					

X Completely tooled.
• Majority of tooling is completed (contact Amphenol Aerospace for availabilty).
✦ Not tooled for 02-R.
P Pin inserts only (contact Amphenol Aerospace for socket availability).
★ Ground plane proprietary option available. Arrg. 9-5 is exclusively ground plane type. See pg. 49 for further information on ground plane connectors.
■ Not Mil-Qualified.
✧ 21-75 is Mil-Qualified with twinax contacts only.
Note: MS connector 21-75 is supplied with size 8 twinax.
Proprietary connector 21-75 is supplied with size 8 coax.

* Hermetic inserts - solder termination standard. (Contact Amphenol Aerospace for optional PCB or eyelet termination).
** Two size 16 contacts dedicated to fiber optics. Consult Amphenol Aerospace catalog 12-352 for fiber optic information.
*** For use in MIL-STD-1760 applications (see pages 31 & 32).
† For RG 180/U and RG 195/U cables only.
†† Size 8 Coax and Twinax are interchangeable.

Tri-Start and Specials

insert availability and identification

TRI-START ARRANGEMENTS, CONT.

Shell Size/Arrg.	Military Shell	Crimp	Hermetics*	Service Rating	Total Contacts	Contact Size 22D	20	16	12	12 (Coax)	10 (Power)	8 (Coax)	8†† (Twinax)
23-35	H	X	P	M	100	100							
23-53	H	X	P	I	53		53						
23-54 ■	H	✦		M	53	40		9	4				
23-55	H	✦	P	I	55		55						
25-4	J	X	P	I	56		48	8					
25-7	J	✦		Twinax	99	97							2
25-8★	J	✦		Twinax	8								8
25-11***	J	✦		N	11		2				9		
25-17 ■	J	✦		M	42	36							6
25-19★	J	X	P	I	19				19				
25-20***	J	✦		N	30		10	13		4			3
25-24★	J	X	P	I	24			12	12				
25-26 ■	J	✦		I	25		16		5			4	
25-29★	J	X		I	29			29					
25-35	J	X	P	M	128	128							
25-37★■	J	✦		I	37			37					
25-41 ■	J	X		N/Inst.	41	22	3	11		2			3
25-43	J	✦		I	43		23	20					
25-46	J	✦		I	46		40	4				2†	
25-61	J	X	P	I	61		61						
25-90	J	X		I	46		40	4					2
25-F4 ■	J	✦		M/I	66	49		13	4				

SPECIAL ARRANGEMENTS (Not Mil-Spec Qualified)

Shell Size/Arrg.	Military Shell	Crimp	Hermetics*	Service Rating	Total Contacts	Comments	Contact Size 22D	20	16	12	8†† (Twinax)
9-2	A	X		I	2	formerly Pyle		2			
15-4	D	X		II	4	formerly Pyle			4		
15-25	D	X		M	25	formerly Pyle	22		3		
17-20	E	X		M	20	formerly Pyle	16			4	
21-12	G	X		I	12	formerly Pyle		3		9	
21-21	G	X		M/Inst.	41	improved sealing	32			9	
21-99	G	X		M	16	formerly Pyle	5			11	
25-92	J	X		M	101	formerly Pyle	92		9		
25-97	J	X		M	42	formerly Pyle	26		3	13	

SPECIAL ARRANGEMENTS (Not Mil-Spec Qualified)

(insert arrangements requiring non-standard shells or larger contacts)

Shell Size/Arrg.	Crimp	Hermetics*	Service Rating	Total Contacts	Contact Size 22D	20	8	4	0
25-16	X		M	8		6		2	
25L-3	X		II	3			1		2
25L-7	X		II	7			7		
33-3	X		II	3				1	2
33-5	X		II	5				5	
33-6	X		II	6			2		4
37-5	X		II	4					4

X Completely tooled.
• Majority of tooling is completed (contact Amphenol Aerospace for availabilty).
✦ Not tooled for 02-R.
P Pin inserts only (contact Amphenol Aerospace for socket availability).
★ Ground plane proprietary option available. Arrangement 9-5 is exclusively ground plane type.
■ Not Mil-Qualified.
* Hermetic inserts - solder termination standard. (Contact Amphenol Aerospace for optional PCB or eyelet termination).
** Two size 16 contacts dedicated to fiber optics. Consult Amphenol Aerospace catalog 12-352 for fiber optic information.
*** For use in MIL-STD-1760 applications (pgs. 31 & 32).
† For RG 180/U and RG 195/U cables only.
†† Size 8 Coax and Twinax are interchangeable.
Note: 25L-3 and 25L-7 require longer shells.

Tri-Start
alternate positioning

Master Key/Keyway Position

Shell Size	Key & keyway arrangement identification letter	AR° or AP° BSC	BR° or BP° BSC	CR° or CP° BSC	DR° or DP° BSC
9	N	105	140	215	265
	A	102	132	248	320
	B	80	118	230	312
	C	35	140	205	275
	D	64	155	234	304
	E	91	131	197	240
11, 13, and 15	N	95	141	208	236
	A	113	156	182	292
	B	90	145	195	252
	C	53	156	220	255
	D	119	146	176	298
	E	51	141	184	242
17 and 19	N	80	142	196	293
	A	135	170	200	310
	B	49	169	200	244
	C	66	140	200	257
	D	62	145	180	280
	E	79	153	197	272
21, 23, and 25	N	80	142	196	293
	A	135	170	200	310
	B	49	169	200	244
	C	66	140	200	257
	D	62	145	180	280
	E	79	153	197	272
25L, 33, and 37	N	80	142	188	293
	A	135	170	188	310
	B	49	169	188	244
	C	66	140	188	257
	D	62	145	188	280
	E	79	153	188	272

A plug with a given rotation letter will mate with a receptacle with the same rotation letter. The angles for a given connector are the same whether it contains pins or sockets. Inserts are not rotated in conjunction with the master key/keyway.

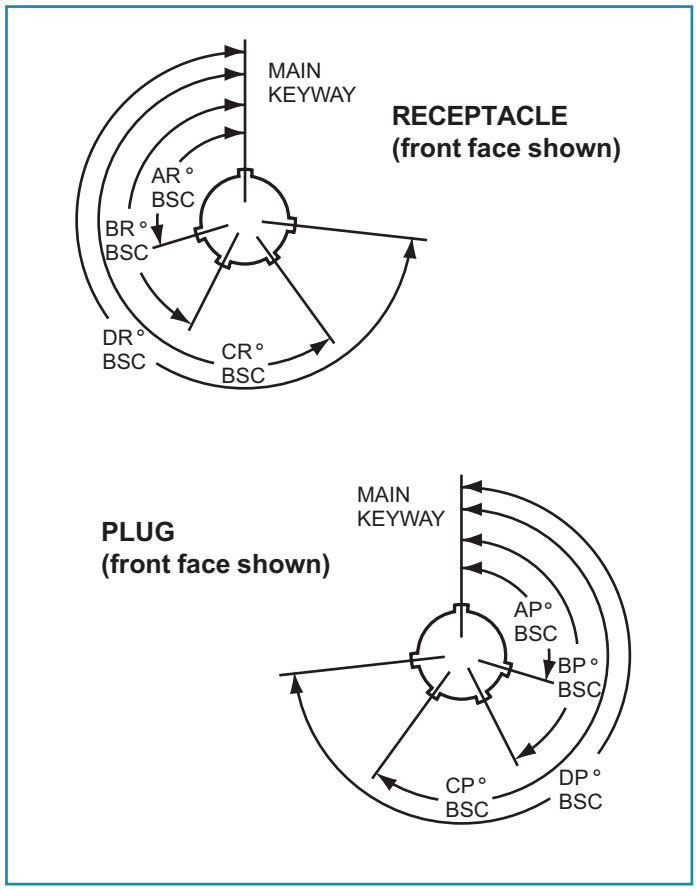

Tri-Start
insert arrangements

front face of pin inserts illustrated

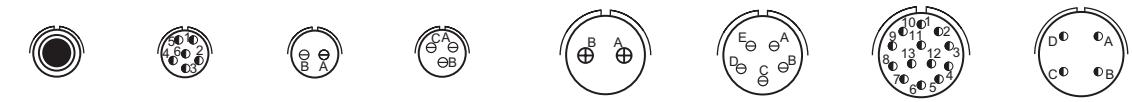

Insert Arrangement	9-5	9-35	9-94	9-98	11-2	11-5	11-35	11-54
Service Rating	Grounded	M	M	I	I	I	M	II
Number of Contacts	1	6	2	3	2	5	13	4
Contact Size	8 Twinax	22D	20	20	16	20	22D	22D

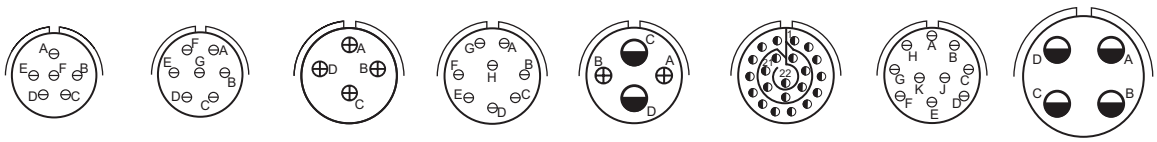

Insert Arrangement	11-98	11-99	13-4	13-8	13-13	13-35	13-98	15-4
Service Rating	I	I	I	I	I, Fiber Optic	M	I	I
Number of Contacts	6	7	4	8	2 2	22	10	4
Contact Size	20	20	16	20	16 12	22D	20	12
					Dedicated to Fiber Optics			

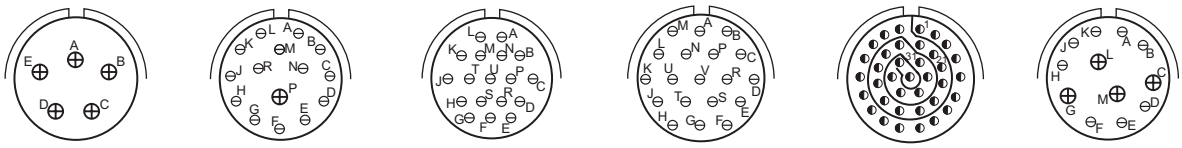

Insert Arrangement	15-5	15-15	15-18	15-19	15-35	15-97
Service Rating	II	I	I	I	M	I
Number of Contacts	5	14 1	18	19	37	8 4
Contact Size	16	20 16	20	20	22D	20 16

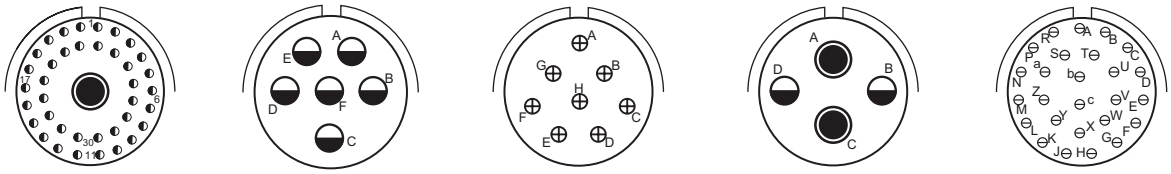

Insert Arrangement	17-2	17-6	17-8	17-22	17-26
Service Rating	M	I	II	Coax	I
Number of Contacts	38 1	6	8	2 2	26
Contact Size	22D 8 Twinax	12	16	12 Coax 8 Coax	20

CONTACT LEGEND 8 10 12 16 20 22D

Tri-Start
insert arrangements

front face of pin inserts illustrated

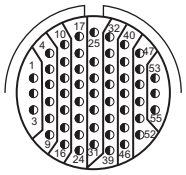
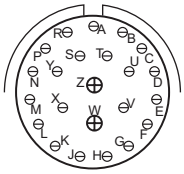
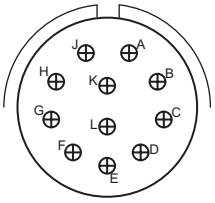
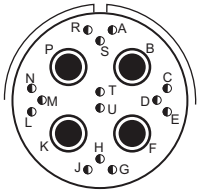

Insert Arrangement	**17-35**	**17-99**	**19-11**	**19-18**
Service Rating	**M**	**I**	**II**	**M**
Number of Contacts	**55**	**21 2**	**11**	**14 4**
Contact Size	**22D**	**20 16**	**16**	**22D 8 Twinax**

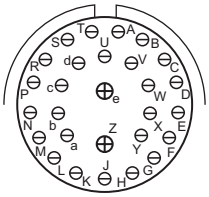
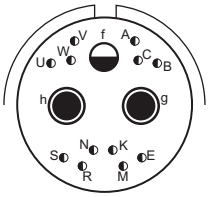
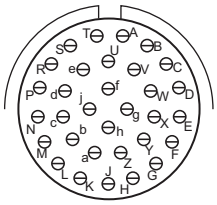
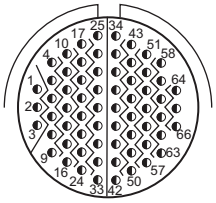

Insert Arrangement	**19-28**	**19-31**	**19-32**	**19-35**
Service Rating	**I**	**M**	**I**	**M**
Number of Contacts	**26 2**	**2 1 12**	**32**	**66**
Contact Size	**20 16**	**8 Coax 12 22D**	**20**	**22D**

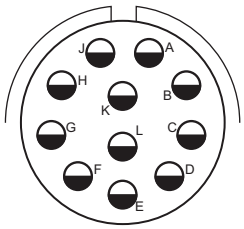
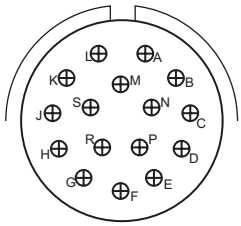
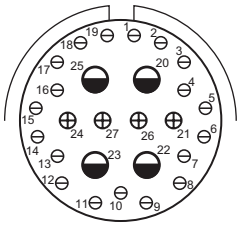
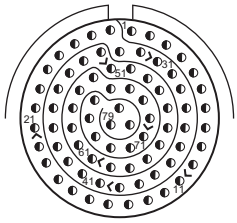

Insert Arrangement	**21-11**	**21-16**	**21-29**	**21-35**
Service Rating	**I**	**II**	**I**	**M**
Number of Contacts	**11**	**16**	**19 4 4**	**79**
Contact Size	**12**	**16**	**20 16 12**	**22D**

CONTACT LEGEND 8 10 12 16 20 22D

Tri-Start
insert arrangements

front face of pin inserts illustrated

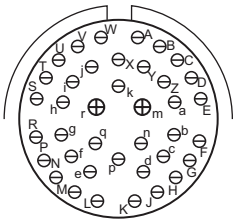
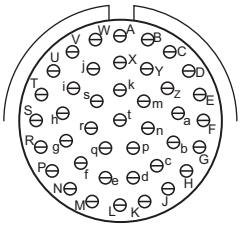
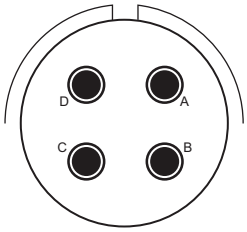
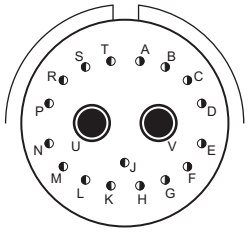

Insert Arrangment	**21-39**		**21-41**	**21-75**	**21-79**	
Service Rating	**I**		**I**	**M**	**II**	
Number of Contacts	**37**	**2**	**41**	**4**	**17**	**2**
Contact Size	**20**	**16**	**20**	**8 Twinax**	**22D**	**8 Coax**

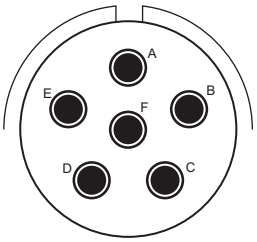
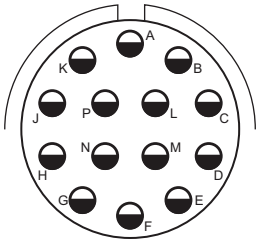
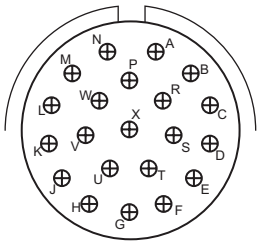
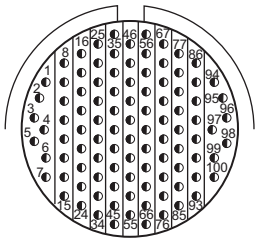

Insert Arrangement	**23-6**	**23-14**	**23-21**	**23-35**
Service Rating	**M**	**I**	**II**	**M**
Number of Contacts	**6**	**14**	**21**	**100**
Contact Size	**8 Twinax**	**12**	**16**	**22D**

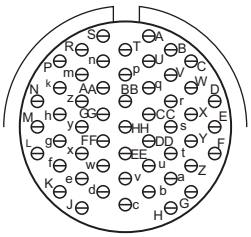
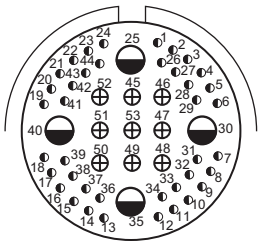
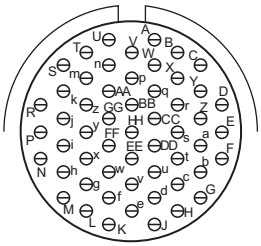

Insert Arrangement	**23-53**	**23-54**			**23-55**
Service Rating	**I**	**M**			**I**
Number of Contacts	**53**	**40**	**9**	**4**	**55**
Contact Size	**20**	**22D**	**16**	**12**	**20**

CONTACT LEGEND 8 10 12 16 20 22D

Tri-Start
insert arrangements

front face of pin inserts illustrated

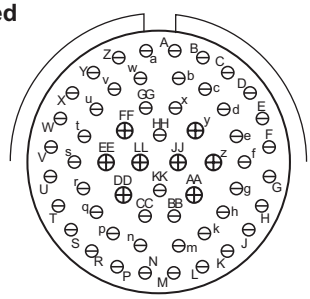

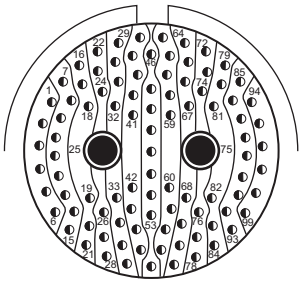

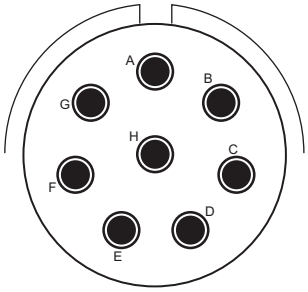

Insert Arrangement	**25-4**		**25-7**		**25-8**	
Service Rating	**I**		**Twinax**		**Twinax**	
Number of Contacts	**48**	**8**	**97**	**2**	**8**	
Contact Size	**20**	**16**	**22D**	**8 Twinax**	**8 Twinax**	

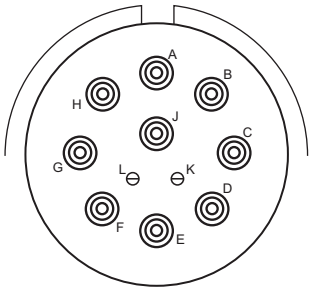

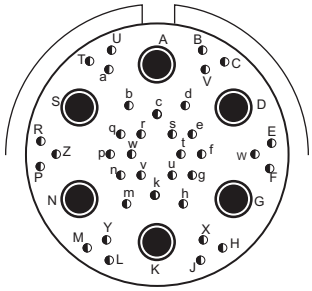

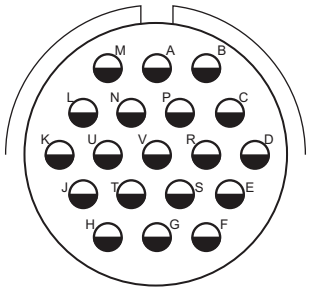

Insert Arrangement	**25-11*****		**25-17**		**25-19**	
Service Rating	**N**		**M**		**I**	
Number of Contacts	**2**	**9**	**36**	**6**	**19**	
Contact Size	**20**	**10 Power**	**22D**	**8 Twinax**	**12**	

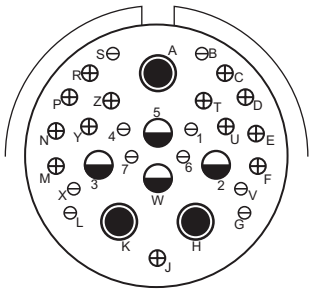

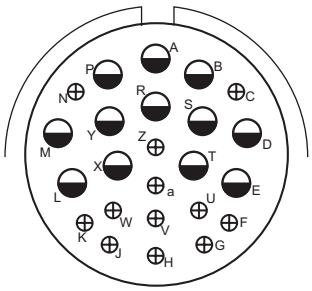

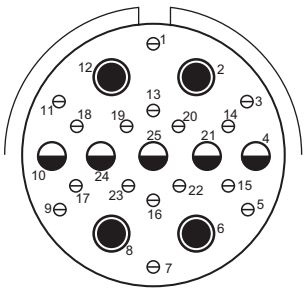

Insert Arrangement	**25-20*****				**25-24**		**25-26**		
Service Rating	**N**				**I**		**I**		
Number of Contacts	**10**	**13**	**3**	**4**	**12**	**12**	**16**	**5**	**4**
Contact Size	**20**	**16**	**8 Twinax**	**12 Coax**	**16**	**12**	**20**	**12**	**8 Coax**
	(With Matched Impedance)								

*** For use in MIL-STD-1760 applications (see pages 31 and 32).

CONTACT LEGEND 8 10 12 16 20 22D

Tri-Start
insert arrangements

front face of pin inserts illustrated

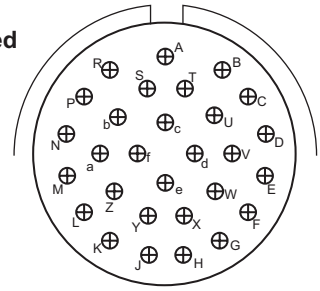

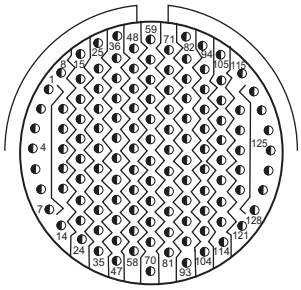

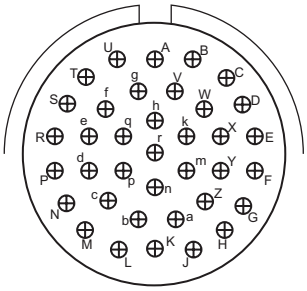

Insert Arrangement	**25-29**	**25-35**	**25-37**
Service Rating	**I**	**M**	**I**
Number of Contacts	**29**	**128**	**37**
Contact Size	**16**	**22D**	**16**

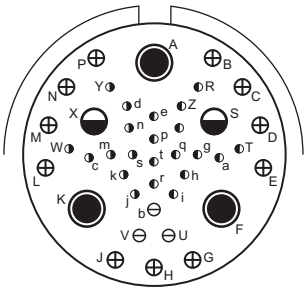

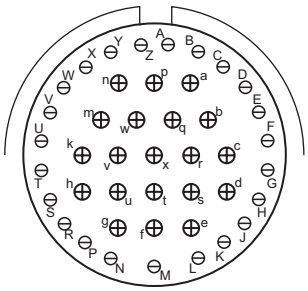

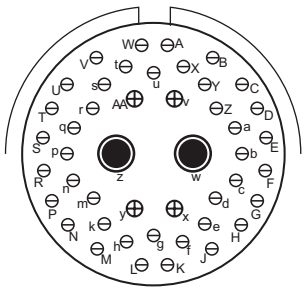

Insert Arrangement	**25-41**	**25-43**	**25-46**
Service Rating	**N/Inst.**	**I**	**I**
Number of Contacts	**22 3 11 2 3**	**23 20**	**40 4 2**
Contact Size	**22D 20 16 12 Coax 8 Twinax**	**20 16**	**20 16 8 Coax†**

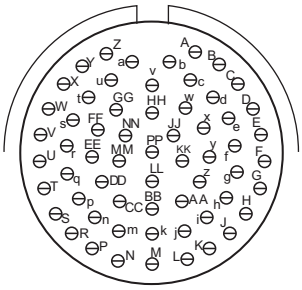

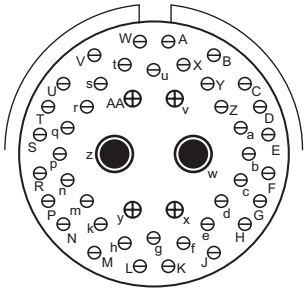

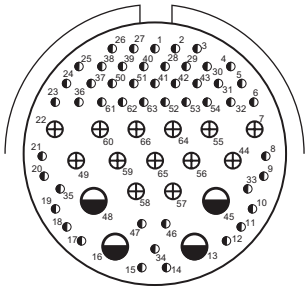

Insert Arrangement	**25-61**	**25-90**	**25-F4**
Service Rating	**I**	**I**	**Size 22D = M, Balance = I**
Number of Contacts	**61**	**40 4 2**	**49 13 4**
Contact Size	**20**	**20 16 8 Twinax**	**22D 16 12**

† Coax contacts for RG180/U or RG195/U cable.

CONTACT LEGEND 8 10 12 16 20 22D

Special
insert arrangements

front face of pin inserts illustrated

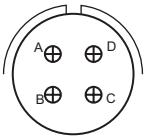
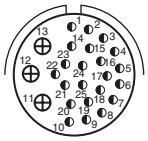
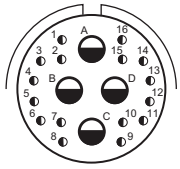

Insert Arrangement	**9-2**	**15-4***	**15-25**	**17-20**
Service Rating	**I**	**II**	**M**	**M**
Number of Contacts	**2**	**4**	**22 3**	**16 4**
Contact Size	**20**	**16**	**22D 16**	**22D 12**

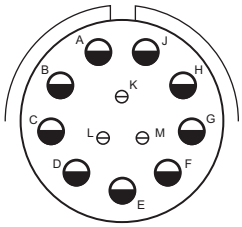
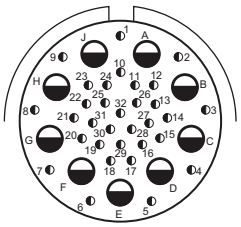
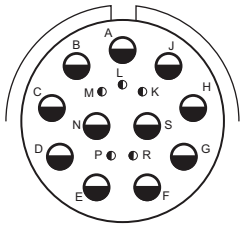

Insert Arrangement	**21-12**	**21-21**	**21-99**
Service Rating	**I**	**M/Inst.**	**M**
Number of Contacts	**3 9**	**32 9**	**5 11**
Contact Size	**20 12**	**22D 12**	**22D 12**

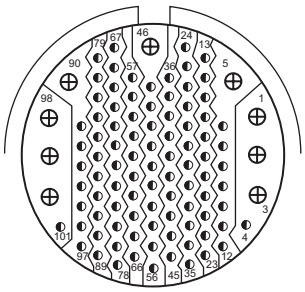
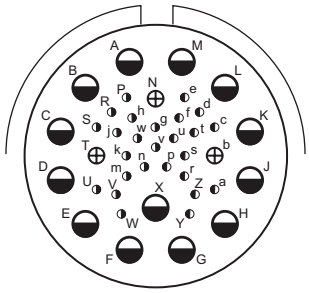

Insert Arrangement	**25-92**	**25-97**
Service Rating	**M**	**M**
Number of Contacts	**92 9**	**26 3 13**
Contact Size	**22D 16**	**22D 16 12**

NOTE: Some specials shown here were formerly known as Pyle arrangements.Consult Amphenol for how to order information for connectors with these inserts.

For further information on special arrangements consult Amphenol Aerospace, Sidney NY.

* Pyle 15-4 does not mate with Amphenol Tri-Start 15-4 insert.

CONTACT LEGEND 8 10 12 16 20 22D

Special
insert arrangements requiring non-standard shells or larger contacts

front face of pin inserts illustrated

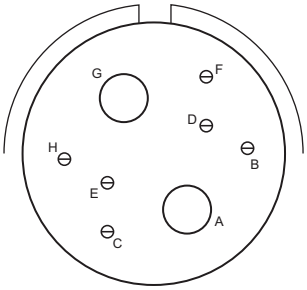

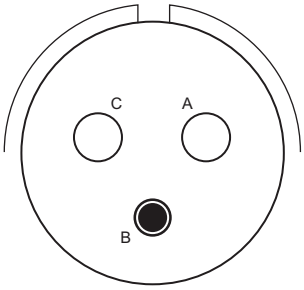

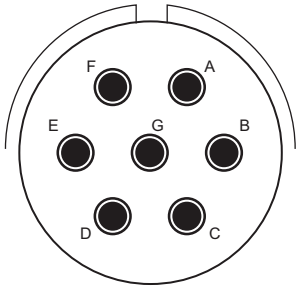

Insert Arrangement	**25-16**	**25L-3**	**25L-7**
Service Rating	**M**	**II**	**II**
Number of Contacts	**6 2**	**1 2**	**7**
Contact Size	**20 4**	**8 4**	**8**

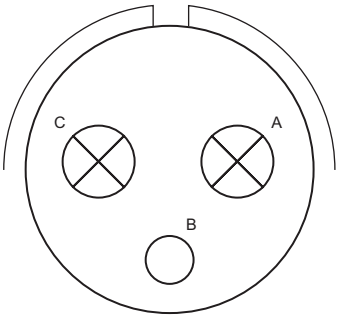

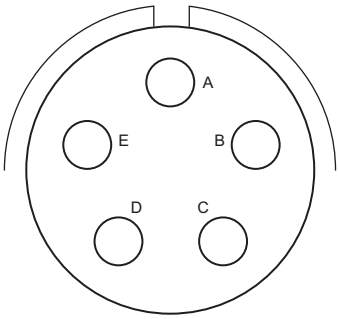

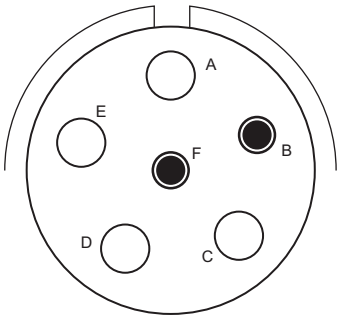

Insert Arrangement	**33-3**	**33-5**	**33-6**
Service Rating	**II**	**II**	**II**
Number of Contacts	**1 2**	**5**	**2 4**
Contact Size	**4 0**	**4**	**8 4**

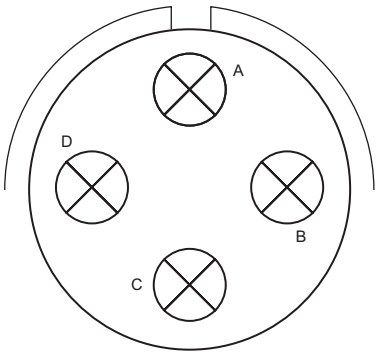

Insert Arrangement	**37-5**
Service Rating	**II**
Number of Contacts	**4**
Contact Size	**0**

NOTE: Some specials shown here were formerly known as Pyle arrangements. Consult Amphenol for how to order information for connectors with these inserts.

Consult Amphenol Aerospace for longer shell drawings.

CONTACT LEGEND

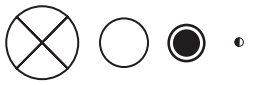

0 4 8 22D

TVP00R (D38999/20) – crimp, metal
CTVP00R (D38999/20) – crimp, composite
wall mounting receptacle

Part number reference.
See how to order, pages 43-46 to complete.

TVP00RW-XX-XXX
TVPS00RK-XX-XXX
TVPS00RF-XX-XXX
TVPS00RS-XX-XXX

CTVP00RW-XX-XXX
CTVPS00RF-XX-XXX

D38999/20

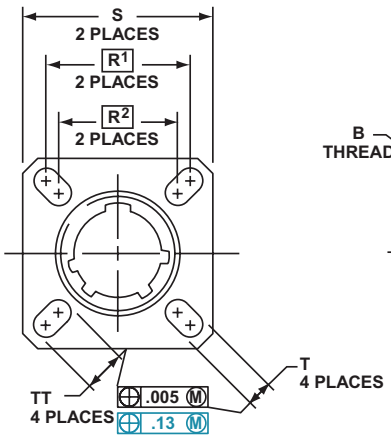

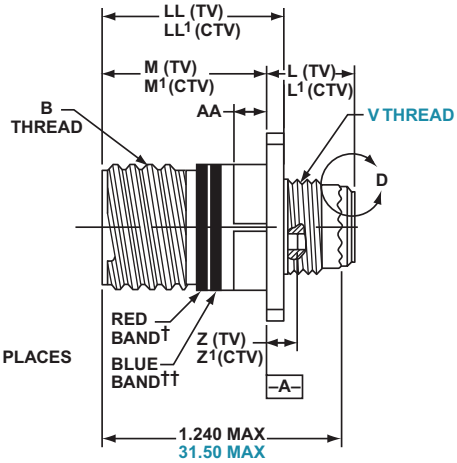

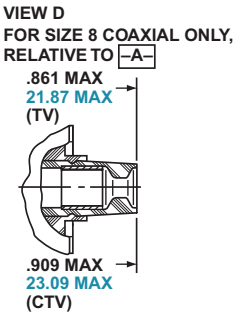

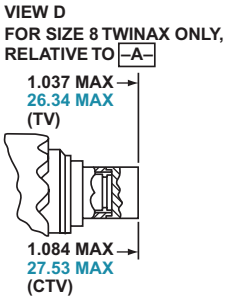

PANEL HOLE DIMENSIONS

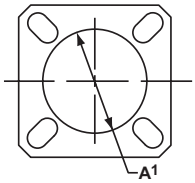

BACK PANEL MOUNTING

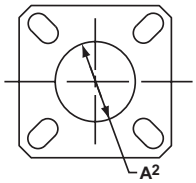

FRONT PANEL MOUNTING

† Red band indicates fully mated
†† Blue band indicates rear release contact retention system

Inches

Shell Size	MS Shell Size Code	B Thread Class 2A 0.1P-0.3L-TS (Plated)	L Max. (TV)	L¹ Max. (CTV)	M +.000 –.005 (TV)	M¹ +.000 –.005 (CTV)	R¹	R²	S Max.	T ±.008	Z Max. (TV)	Z¹ Max (CTV)	A¹ Dia. Back Panel Mount	A² Dia. Front Panel Mount	AA Max. Panel Thickness	LL +.006 –.000 (TV)	LL¹ ±.005 (CTV)	TT ±.008
9	A	.6250	.469	.514	.820	.773	.719	.594	.948	.128	.153	.198	.650	.510	.234	.905	.908	.216
11	B	.7500	.469	.514	.820	.773	.812	.719	1.043	.128	.153	.198	.800	.620	.234	.905	.908	.194
13	C	.8750	.469	.514	.820	.773	.906	.812	1.137	.128	.153	.198	.910	.740	.234	.905	.908	.194
15	D	1.0000	.469	.514	.820	.773	.969	.906	1.232	.128	.153	.198	1.040	.900	.234	.905	.908	.173
17	E	1.1875	.469	.514	.820	.773	1.062	.969	1.323	.128	.153	.198	1.210	1.010	.234	.905	.908	.194
19	F	1.2500	.469	.514	.820	.773	1.156	1.062	1.449	.128	.153	.198	1.280	1.130	.234	.905	.908	.194
21	G	1.3750	.500	.545	.790	.741	1.250	1.156	1.575	.128	.183	.228	1.410	1.250	.204	.905	.904	.194
23	H	1.5000	.500	.545	.790	.741	1.375	1.250	1.701	.154	.183	.228	1.530	1.360	.204	.905	.904	.242
25	J	1.6250	.500	.545	.790	.741	1.500	1.375	1.823	.154	.183	.228	1.660	1.470	.204	.905	.904	.242

Millimeters

Shell Size	MS Shell Size Code	L Max. (TV)	L¹ Max. (CTV)	M +.00 –.13 (TV)	M¹ +.00 –.13 (CTV)	R¹	R²	S Max	T ±.20	V Thread Metric	Z Max. (TV)	Z¹ Max. (CTV)	A¹ Dia. Back Panel Mount	A² Dia. Front Panel Mount	AA Max.	LL +.15 –.00 (TV)	LL¹ ±.13 (CTV)	TT ±.20
9	A	11.91	13.06	20.83	19.63	18.26	15.09	24.1	3.25	M12X1-6g	3.89	5.03	16.66	13.11	5.94	22.99	23.06	5.49
11	B	11.91	13.06	20.83	19.63	20.62	18.26	26.5	3.25	M15X1-6g	3.89	5.03	20.22	15.88	5.94	22.99	23.06	4.93
13	C	11.91	13.06	20.83	19.63	23.01	20.62	28.9	3.25	M18X1-6g	3.89	5.03	23.42	19.05	5.94	22.99	23.06	4.93
15	D	11.91	13.06	20.83	19.63	24.61	23.01	31.3	3.25	M22X1-6g	3.89	5.03	26.59	23.01	5.94	22.99	23.06	4.39
17	E	11.91	13.06	20.83	19.63	26.97	24.61	33.7	3.25	M25X1-6g	3.89	5.03	30.96	25.81	5.94	22.99	23.06	4.93
19	F	11.91	13.06	20.83	19.63	29.36	26.97	36.9	3.25	M28X1-6g	3.89	5.03	32.94	28.98	5.94	22.99	23.06	4.93
21	G	12.70	13.84	20.07	18.82	31.75	29.36	40.1	3.25	M31X1-6g	4.65	5.79	36.12	32.16	5.18	22.99	22.96	4.93
23	H	12.70	13.84	20.07	18.82	34.93	31.75	43.3	3.91	M34X1-6g	4.65	5.79	39.29	34.93	5.18	22.99	22.96	6.15
25	J	12.70	13.84	20.07	18.82	38.10	34.93	46.4	3.91	M37X1-6g	4.65	5.79	42.47	37.69	5.18	22.99	22.96	6.15

All dimensions for reference only

Designates true position dimensioning

TVP02R – crimp, metal
CTVP02R – crimp, composite
box mounting receptacle

Part number reference.
See how to order, pages 43-46 to complete.

TVP02RW-XX-XXX
TVPS02RK-XX-XXX
TVPS02RF-XX-XXX
TVPS02RS-XX-XXX

CTVP02RW-XX-XXX
CTVPS02RF-XX-XXX

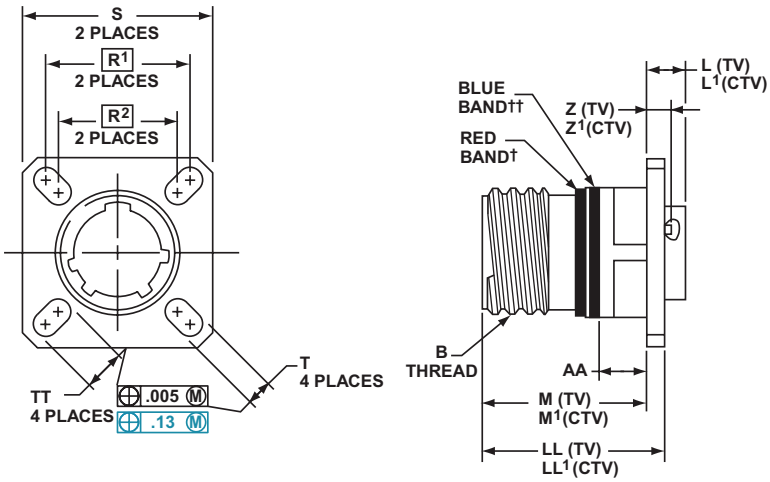

PANEL HOLE DIMENSIONS

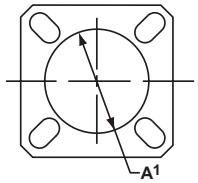

BACK PANEL MOUNTING

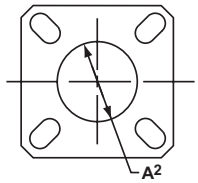

FRONT PANEL MOUNTING

† Red band indicates fully mated
†† Blue band indicates rear release contact retention system
Consult Amphenol Aerospace for availability of composite box mount receptacles.

Inches

Shell Size	MS Shell Size Code	B Thread Class 2A 0.1P-0.3L-TS (Plated)	L Max. (TV)	L¹ Max. (CTV)	M +.000 –.005 (TV)	M¹ +.000 –.005 (CTV)	R¹	R²	S Max.	T ±.008	Z Max. (TV)	Z¹ Max. (CTV)	A¹ Back Panel Mount	A² Front Panel Mount	AA Max. Panel Thickness	LL +.006 –.000 (TV)	LL¹ ±.005 (CTV)	TT ±.008
9	A	.6250	.205	.250	.820	.773	.719	.594	.948	.128	.153	.198	.650	.510	.234	.905	.908	.216
11	B	.7500	.205	.250	.820	.773	.812	.719	1.043	.128	.153	.198	.800	.620	.234	.905	.908	.194
13	C	.8750	.205	.250	.820	.773	.906	.812	1.137	.128	.153	.198	.910	.740	.234	.905	.908	.194
15	D	1.0000	.205	.250	.820	.773	.969	.906	1.232	.128	.153	.198	1.040	.900	.234	.905	.908	.173
17	E	1.1875	.205	.250	.820	.773	1.062	.969	1.323	.128	.153	.198	1.210	1.010	.234	.905	.908	.194
19	F	1.2500	.205	.250	.820	.773	1.156	1.062	1.449	.128	.153	.198	1.280	1.130	.234	.905	.908	.194
21	G	1.3750	.235	.280	.790	.741	1.250	1.156	1.575	.128	.183	.228	1.410	1.250	.204	.905	.904	.194
23	H	1.5000	.235	.280	.790	.741	1.375	1.250	1.701	.154	.183	.228	1.530	1.360	.204	.905	.904	.242
25	J	1.6250	.235	.280	.790	.741	1.500	1.375	1.823	.154	.183	.228	1.660	1.470	.204	.905	.904	.242

Millimeters

Shell Size	MS Shell Size Code	L Max. (TV)	L¹ Max. (CTV)	M +.00 –.13 (TV)	M¹ +.00 –.13 (CTV)	R¹	R²	S Max	T ±.20	Z Max. (TV)	Z¹ Max. (CTV)	A¹ Back Panel Mount	A² Front Panel Mount	AA Max.	LL +.15 –.00 (TV)	LL¹ ±.13 (CTV)	TT ±.20
9	A	5.21	6.35	20.83	19.63	18.26	15.09	24.1	3.25	3.89	5.03	16.66	13.11	5.94	22.99	23.06	5.49
11	B	5.21	6.35	20.83	19.63	20.62	18.26	26.5	3.25	3.89	5.03	20.22	15.88	5.94	22.99	23.06	4.93
13	C	5.21	6.35	20.83	19.63	23.01	20.62	28.9	3.25	3.89	5.03	23.42	19.05	5.94	22.99	23.06	4.93
15	D	5.21	6.35	20.83	19.63	24.61	23.01	31.3	3.25	3.89	5.03	26.59	23.01	5.94	22.99	23.06	4.39
17	E	5.21	6.35	20.83	19.63	26.97	24.61	33.7	3.25	3.89	5.03	30.96	25.81	5.94	22.99	23.06	4.93
19	F	5.21	6.35	20.83	19.63	29.36	26.97	36.9	3.25	3.89	5.03	32.94	28.98	5.94	22.99	23.06	4.93
21	G	5.97	7.11	20.07	18.82	31.75	29.36	40.1	3.25	4.65	5.79	36.12	32.16	5.18	22.99	22.96	4.93
23	H	5.97	7.11	20.07	18.82	34.92	31.75	43.3	3.91	4.65	5.79	39.29	34.93	5.18	22.99	22.96	6.15
25	J	5.97	7.11	20.07	18.82	38.10	34.92	46.4	3.91	4.65	5.79	42.47	37.69	5.18	22.99	22.96	6.15

All dimensions for reference only

☐ Designates true position dimensioning

TV06R (D38999/26) – crimp, metal
CTV06R (D38999/26) – crimp, composite
straight plug

Part number reference.
See how to order, pages 43-46 to complete.

TV06RW-XX-XXX
TVS06RK-XX-XXX
TVS06RF-XX-XXX
TVS06RS-XX-XXX

CTV06RW-XX-XXX
CTVS06RF-XX-XXX

D38999/26

METAL

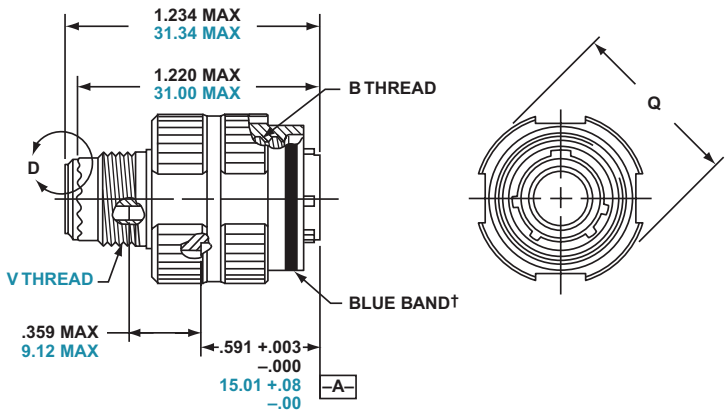

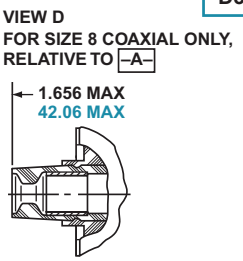

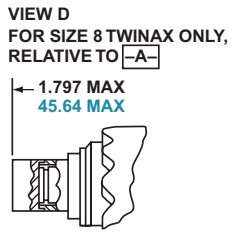

COMPOSITE

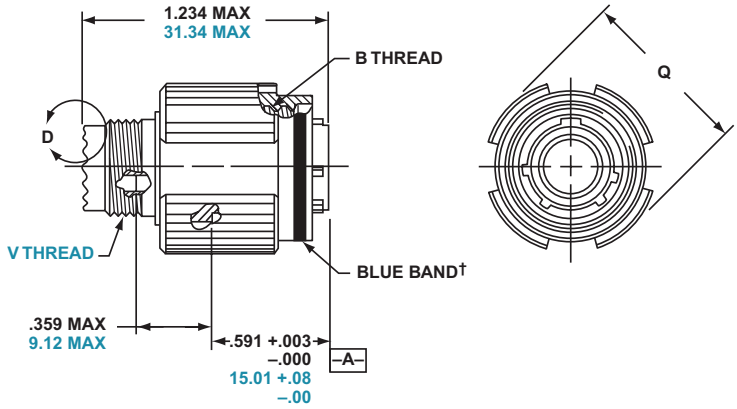

† Blue band indicates rear release contact retention system

Inches

Shell Size	MS Shell Size Code	B Thread 0.1P-0.3L-TS-2B (Plated)	Q Dia. Max.
9	A	.6250	.858
11	B	.7500	.984
13	C	.8750	1.157
15	D	1.0000	1.280
17	E	1.1875	1.406
19	F	1.2500	1.516
21	G	1.3750	1.642
23	H	1.5000	1.768
25	J	1.6250	1.890

Millimeters

Shell Size	MS Shell Size Code	Q Max.	V Thread Metric
9	A	21.8	M12X1-6g
11	B	25.0	M15X1-6g
13	C	29.4	M18X1-6g
15	D	32.5	M22X1-6g
17	E	35.7	M25X1-6g
19	F	38.5	M28X1-6g
21	G	41.7	M31X1-6g
23	H	44.9	M34X1-6g
25	J	48.0	M37X1-6g

All dimensions for reference only.

TV26/MTV26 – crimp, metal

CLUTCH-LOK® straight plug for high vibration and harsh environment applications

Part number reference.
See how to order, pages 43, 44 to complete.
TV26RKXXXXX
TV26RSXXXXX

For parts with MS Stamping use MTV26( ) part number as follow:
MTV26RKXXXXX
MTV26RSXXXXX

The latest in MIL-DTL-38999, Series III Connector Technology is the CLUTCH-LOK. Designed for high vibration and harsh environments such as aircraft gas turbine engines, it is also an ideal choice for demanding applications such as aircraft, space and military ground vehicles. The unique clutch design of the Amphenol CLUTCH-LOK means that you don't have to compromise the need for quick, smooth mating of plugs and receptacles in order to get increased uncoupling torque.

The CLUTCH-LOK has proven to not only remain mated and pass all the Series III specification requirements - it also has proven to actually tighten itself under vibration. This is a powerful advantage over the traditionally high vibration application connectors. The CLUTCH-LOK is also a tremendous advantage in inaccessible, hard to reach areas where mating torque is difficult to apply and complete coupling is not verifiable by inspection.

CLUTCH-LOK features and benefits:

- High degree of differential torque
- Infinite free coupling and positive metal-to-metal bottoming with each mating
- No settling back to the next ratchet tooth
- Available with stainless steel shells and Class K firewall inserts
- All the advantages of MIL-DTL-38999 Series III including EMI/RFI shielding, electrolytic erosion resistance and contact protection with recessed pins
- Enhanced connector performance at affordable prices
- Completely intermateable with all existing MIL-DTL-38999 Series III connectors
- Fully QPL'd

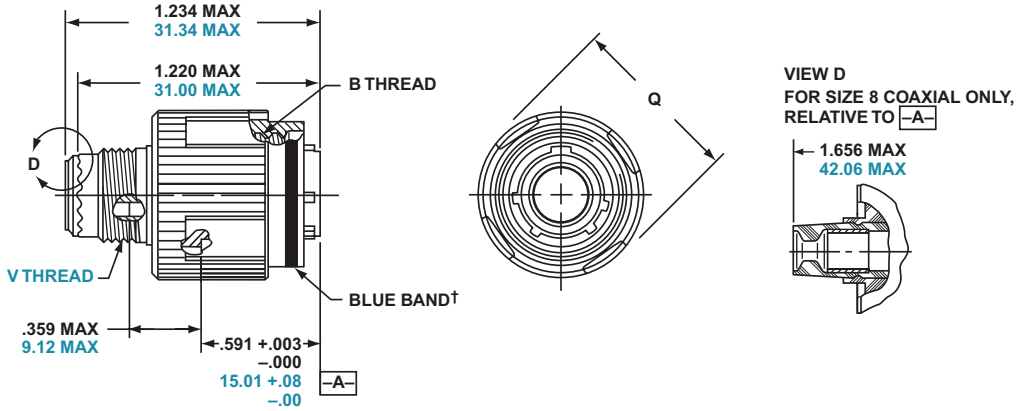

† Blue band indicates rear release contact retention system

Inches

Shell Size	MS Shell Size Code	B Thread 0.1P-0.3L-TS-2B (Plated)	Q Dia. Max.
9	A	.6250	.858
11	B	.7500	.984
13	C	.8750	1.157
15	D	1.0000	1.280
17	E	1.1875	1.406
19	F	1.2500	1.516
21	G	1.3750	1.642
23	H	1.5000	1.768
25	J	1.6250	1.890

Millimeters

Shell Size	MS Shell Size Code	Q Max.	V Thread Metric
9	A	21.8	M12X1-6g
11	B	25.0	M15X1-6g
13	C	29.4	M18X1-6g
15	D	32.5	M22X1-6g
17	E	35.7	M25X1-6g
19	F	38.5	M28X1-6g
21	G	41.7	M31X1-6g
23	H	44.9	M34X1-6g
25	J	48.0	M37X1-6g

All dimensions for reference only.

TV07R (D38999/24) – crimp, metal
CTV07R (D38999/24) – crimp, composite
jam nut receptacle

Part number reference.
See how to order, pages 43-46 to complete.

TV07RW-XX-XXX
TVS07RK-XX-XXX
TVS07RF-XX-XXX
TVS07RS-XX-XXX

CTV07RW-XX-XXX
CTVS07RF-XX-XXX

D38999/24

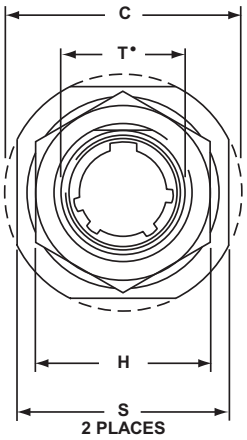

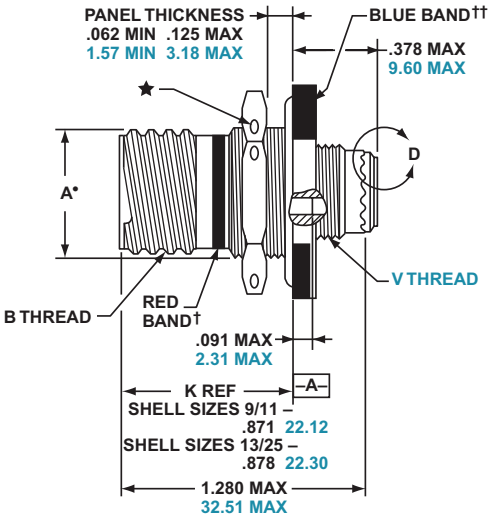

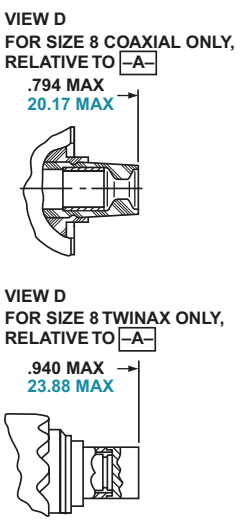

PANEL HOLE DIMENSIONS

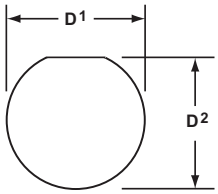

JAM NUT D-HOLE MOUNTING

† Red band indicates fully mated
†† Blue band indicates rear release contact retention system
★ .059 dia min.
1.5 dia min. 3 lockwire holes
Formed lockwire hole design (6 holes) is optional

Inches

Shell Size	MS Shell Size Code	A• +.000 –.010	B Thread Class 2A 0.1P-0.3L-TS (Plated)	C Max.	D1 +.010 –.000	D2 +.000 –.010	H Hex +.017 –.016	S ±.010	T• +.010 –.000
9	A	.669	.6250	1.199	.700	.670	.875	1.062	.697
11	B	.769	.7500	1.386	.825	.770	1.000	1.250	.822
13	C	.955	.8750	1.511	1.010	.955	1.188	1.375	1.007
15	D	1.084	1.0000	1.636	1.135	1.085	1.312	1.500	1.134
17	E	1.208	1.1875	1.761	1.260	1.210	1.438	1.625	1.259
19	F	1.333	1.2500	1.949	1.385	1.335	1.562	1.812	1.384
21	G	1.459	1.3750	2.073	1.510	1.460	1.688	1.938	1.507
23	H	1.575	1.5000	2.199	1.635	1.585	1.812	2.062	1.634
25	J	1.709	1.6250	2.323	1.760	1.710	2.000	2.188	1.759

Millimeters

Shell Size	MS Shell Size Code	A• +.00 –.25	C Max.	D1 +.25 –.00	D2 +.00 –.25	H Hex +.43 –.41	S ±.25	T• +.25 –.00	V Thread Metric
9	A	16.99	30.45	17.78	17.02	22.23	26.97	17.70	M12X1-6g
11	B	19.53	35.20	20.96	19.59	25.40	31.75	20.88	M15X1-6g
13	C	24.26	38.38	25.65	24.26	30.18	34.93	25.58	M18X1-6g
15	D	27.53	41.55	28.83	27.56	33.32	38.10	28.80	M22X1-6g
17	E	30.68	44.73	32.01	30.73	36.53	41.28	31.98	M25X1-6g
19	F	33.86	49.50	35.18	33.91	39.67	46.02	35.15	M28X1-6g
21	G	37.06	52.65	38.35	37.08	42.80	49.23	38.28	M31X1-6g
23	H	40.01	55.85	41.53	40.26	46.02	52.37	41.50	M34X1-6g
25	J	43.41	59.00	44.70	43.43	50.80	55.58	44.68	M37X1-6g

All dimensions for reference only • D shaped panel cut-out dimensions
NOTE: Deep reach receptacles are available for panel thicknesses up to .750 max.

TV01R – crimp, metal
CTV01R – crimp, composite
line receptacle

Part number reference.
See how to order, 43-45 to complete.
TV01RW-XX-XXX
TVS01RF-XX-XXX
CTV01RW-XX-XXX
CTVS01RF-XX-XXX

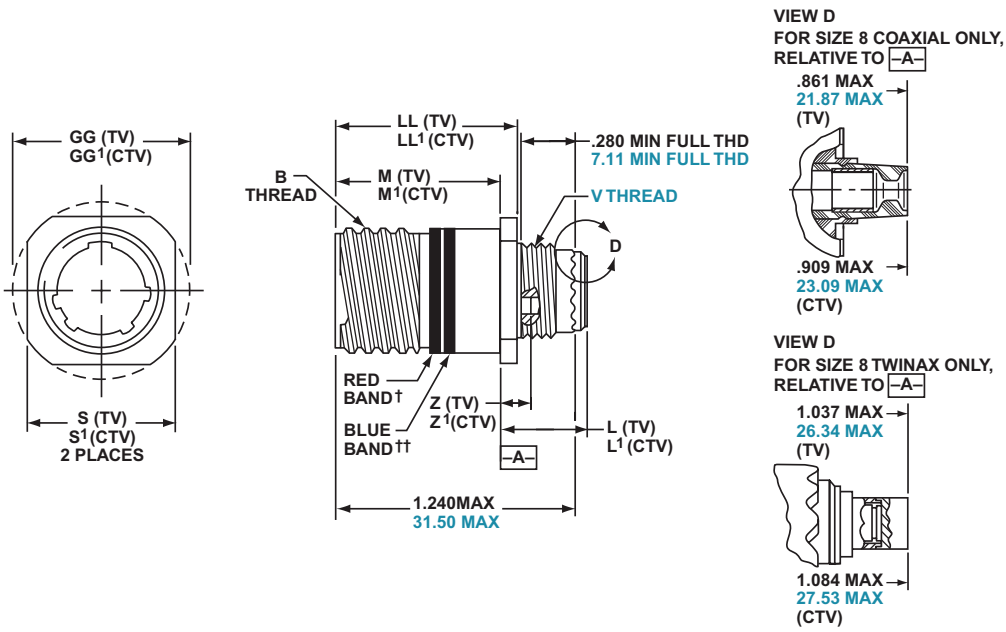

† Red band indicates fully mated
†† Blue band indicates rear release contact retention system

Inches

Shell Size	MS Shell Size Code	B Thread 0.1P-0.3L-TS-2A (Plated)	M +.000 –.005 (TV)	M1 +.000 –.005 (CTV)	L Max. (TV)	L1 Max. (CTV)	S ±.010 (TV)	S1 ±.010 (CTV)	Z Max. (TV)	Z1 Max. (CTV)	GG ±.010 (TV)	GG1 ±.010 (CTV)	LL +.006 –.000 (TV)	LL1 ±.005 (CTV)
9	A	.6250	.820	.773	.469	.514	.675	.635	.153	.198	.812	.699	.905	.908
11	B	.7500	.820	.773	.469	.514	.800	.765	.153	.198	.905	.875	.905	.908
13	C	.8750	.820	.773	.469	.514	.925	.885	.153	.198	1.093	1.007	.905	.908
15	D	1.0000	.820	.773	.469	.514	1.050	1.100	.153	.198	1.219	1.140	.905	.908
17	E	1.1875	.820	.773	.469	.514	1.238	1.197	.153	.198	1.375	1.229	.905	.908
19	F	1.2500	.820	.773	.469	.514	1.300	1.260	.153	.198	1.469	1.380	.905	.908
21	G	1.3750	.790	.741	.500	.545	1.425	1.385	.183	.228	1.625	1.493	.905	.904
23	H	1.5000	.790	.741	.500	.545	1.550	1.510	.183	.228	1.750	1.626	.905	.904
25	J	1.6250	.790	.741	.500	.545	1.675	1.635	.183	.228	1.875	1.777	.905	.904

Millimeters

Shell Size	MS Shell Size Coded	M +.00 –.13 (TV)	M1 +.00 –.13 (CTV)	L Max (TV)	L1 Max (CTV)	S ±.25 (TV)	S1 ±.25 (CTV)	V Thread Metric	Z Max (TV)	Z1 Max (CTV)	GG ±.25 (TV)	GG1 ±.25 (CTV)	LL +.15 –.00 (TV)	LL1 ±.13 (CTV)
9	A	20.83	19.63	11.91	13.06	17.15	16.13	M12X1-6g	3.89	5.03	20.62	17.75	22.99	23.06
11	B	20.83	19.63	11.91	13.06	20.32	19.43	M15X1-6g	3.89	5.03	22.99	22.22	22.99	23.06
13	C	20.83	19.63	11.91	13.06	23.50	22.47	M18X1-6g	3.89	5.03	27.76	25.57	22.99	23.06
15	D	20.83	19.63	11.91	13.06	26.67	27.94	M22X1-6g	3.89	5.03	30.96	28.95	22.99	23.06
17	E	20.83	19.63	11.91	13.06	31.45	30.40	M25X1-6g	3.89	5.03	34.93	31.21	22.99	23.06
19	F	20.83	19.63	11.91	13.06	33.02	32.00	M28X1-6g	3.89	5.03	37.31	35.05	22.99	23.06
21	G	20.07	18.82	12.70	13.84	36.20	35.18	M31X1-6g	4.65	5.79	41.28	37.92	22.99	22.96
23	H	20.07	18.82	12.70	13.84	39.37	38.35	M34X1-6g	4.65	5.79	44.45	41.30	22.99	22.96
25	J	20.07	18.82	12.70	13.84	42.55	41.53	M37X1-6g	4.65	5.79	47.63	45.13	22.99	22.96

All dimensions for reference only

TV09R – crimp, metal
flange mounting plug

Part number reference.
See how to order, page 43 to complete.
TV09RW-XX-XXX
TVS09RF-XX-XXX

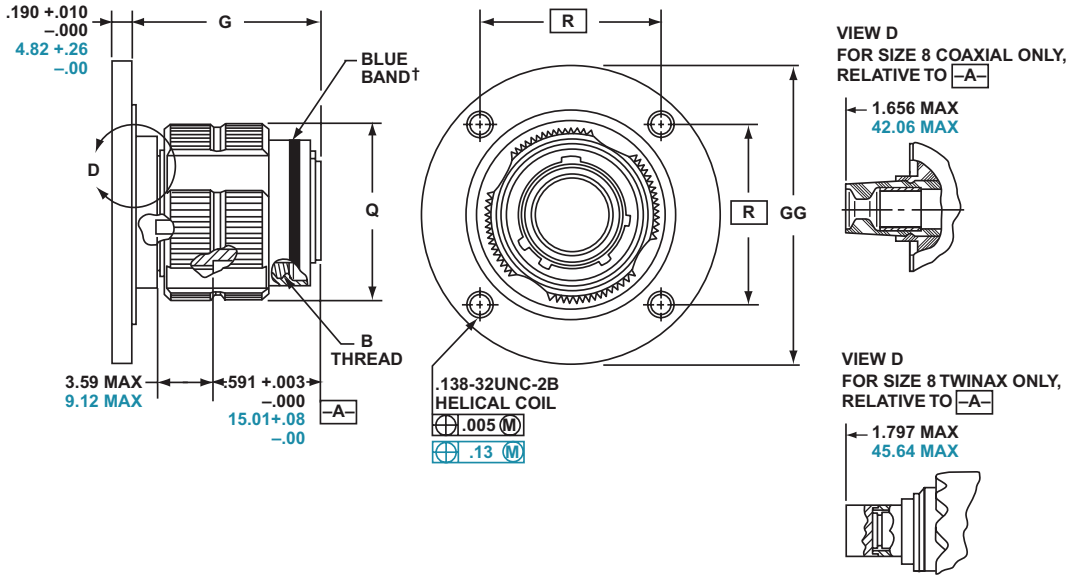

† Blue band indicates rear release contact retention system

Inches

Shell Size	MS Shell Size Coded	B Thread 0.1P-0.3L-TS-2A (Plated)	G ±.060	Q Dia. Max	R	GG Dia. ±.005
9**	A	.6250	1.106	.859	1.038	1.838
11	B	.7500	1.106	.969	1.115	1.948
13**	C	.8750	1.106	1.141	1.240	2.124
15	D	1.0000	1.106	1.266	1.327	2.248
17	E	1.1875	1.106	1.391	1.417	2.375
19	F	1.2500	1.356	1.500	1.557	2.495
21	G	1.3750	1.356	1.625	1.624	2.568
23	H	1.5000	1.356	1.750	1.713	2.723
25	J	1.6250	1.356	1.875	1.801	2.848

Millimeters

Shell Size	MS Shell Size Code	G ±1.52	Q Dia. Max	R	GG Dia. ±.13
9**	A	28.09	21.82	26.37	46.69
11	B	28.09	24.62	28.32	49.48
13**	C	28.09	28.98	31.50	53.95
15	D	28.09	32.16	33.71	57.10
17	E	28.09	35.33	35.99	60.33
19	F	34.44	38.10	39.55	63.37
21	G	34.44	41.28	41.25	65.23
23	H	34.44	44.45	43.51	69.16
25	J	34.44	47.63	45.75	72.34

All dimensions for reference only
** Partially tooled. Consult Amphenol Aerospace for availability

Designates true position dimensioning

TVPS02Y (D38999/21) – hermetic, metal box mounting receptacle

Part number reference.
See how to order, pages 43, 44 to complete.
TVPS02Y-XX-XXX
TVPS02YN-XX-XXX
D38999/21

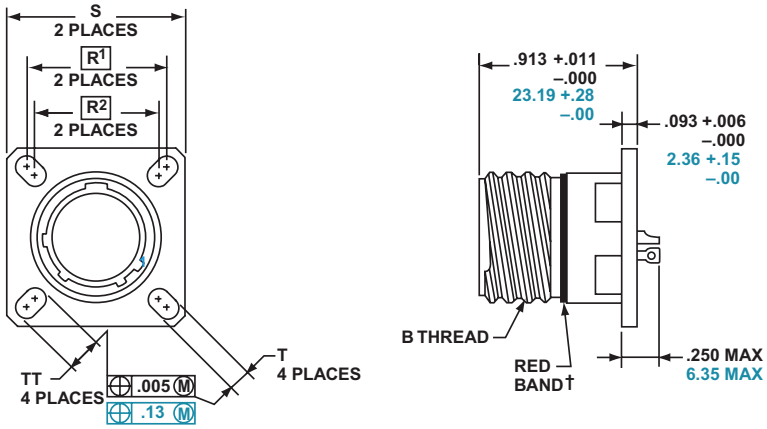

† Red band indicates fully mated

NOTE: Consult Amphenol Aerospace for availability of non-glass-sealed versions with printed circuit tail contacts.

Inches

Shell Size	MS Shell Size Code	B Thread Class 2A 0.1P-0.3L-TS (Plated)	R1	R2	S ±.010	T ±.008	TT ±.008
9	A	.6250	.719	.594	.938	.128	.216
11	B	.7500	.812	.719	1.031	.128	.194
13	C	.8750	.906	.812	1.125	.128	.194
15	D	1.0000	.969	.906	1.219	.128	.173
17	E	1.1875	1.062	.969	1.312	.128	.194
19	F	1.2500	1.156	1.062	1.438	.128	.194
21	G	1.3750	1.250	1.156	1.562	.128	.194
23	H	1.5000	1.375	1.250	1.688	.154	.242
25	J	1.6250	1.500	1.375	1.812	.154	.242

Millimeters

Shell Size	MS Shell Size Code	R1	R2	S ±.25	T ±.20	TT ±.20
9	A	18.26	15.09	23.83	3.25	5.49
11	B	20.62	18.26	26.19	3.25	4.93
13	C	23.01	20.62	28.58	3.25	4.93
15	D	24.61	23.01	30.96	3.25	4.39
17	E	26.97	24.61	33.32	3.25	4.93
19	F	29.36	26.97	36.53	3.25	4.93
21	G	31.75	29.36	39.67	3.25	4.93
23	H	34.93	31.75	42.88	3.91	6.15
25	J	38.10	34.93	46.02	3.91	6.15

All dimensions for reference only

☐ Designates true position dimensioning

TVS07Y (D38999/23) – hermetic, metal jam nut receptacle

Part number reference.
See how to order, pages 43, 44 to complete.
TVS07Y-XX-XXX
TVS07YN-XX-XXX
D38999/23

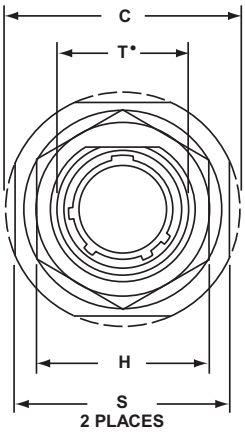

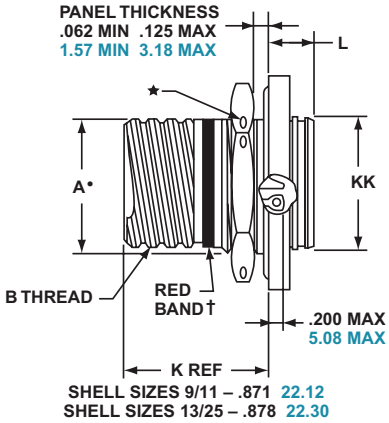

PANEL HOLE DIMENSIONS

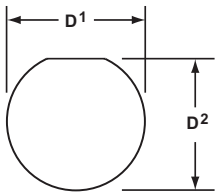

JAM NUT D-HOLE MOUNTING

† Red band indicates fully mated

★ . 059 dia min.
1.5 dia min.
3 lockwire holes

Formed lockwire hole design (6 holes) is optional.

Inches

Shell Size	MS Shell Size Code	A• +.000 –.010	B Thread Class 2A 0.1P-0.3L-TS (Plated)	C Max	D1 +.010 –.000	D2 +.000 –.010	H Hex +.017 –.016	L Max	S ±.010	T• +.010 –.000	KK +.011 –.000
9	A	.669	.6250	1.199	.700	.670	.875	.357	1.062	.697	.642
11	B	.769	.7500	1.386	.825	.770	1.000	.357	1.250	.822	.766
13	C	.955	.8750	1.511	1.010	.955	1.188	.357	1.375	1.007	.892
15	D	1.084	1.0000	1.636	1.135	1.085	1.312	.357	1.500	1.134	1.018
17	E	1.208	1.1875	1.761	1.260	1.210	1.438	.357	1.625	1.259	1.142
19	F	1.333	1.2500	1.949	1.385	1.335	1.562	.381	1.182	1.384	1.268
21	G	1.459	1.3750	2.073	1.510	1.460	1.688	.381	1.938	1.507	1.392
23	H	1.575	1.5000	2.199	1.635	1.585	1.812	.381	2.062	1.634	1.518
25	J	1.709	1.6250	2.323	1.760	1.710	2.000	.381	2.188	1.759	1.642

Millimeters

Shell Size	MS Shell Size Code	A• +.00 –.25	C Max	D1 +.25 –.00	D2 +.00 –.25	H Hex +.43 –.41	L Max	S ±.25	T• +.25 –.00	KK +.28 –.00
9	A	16.99	30.45	17.78	17.02	22.23	9.07	26.97	17.70	16.31
11	B	19.53	35.20	20.96	19.59	25.40	9.07	31.75	20.88	19.46
13	C	24.26	38.38	25.65	24.26	30.18	9.07	34.93	25.58	22.66
15	D	27.53	41.55	28.83	27.56	33.32	9.07	38.10	28.80	25.86
17	E	30.68	44.73	32.01	30.73	36.53	9.07	41.28	31.98	29.01
19	F	33.86	49.50	35.18	33.91	39.67	9.68	46.02	35.15	32.21
21	G	37.06	52.65	38.35	37.08	42.80	9.68	49.23	38.28	35.36
23	H	40.01	55.85	41.53	40.26	46.02	9.68	52.37	41.50	38.56
25	J	43.41	59.00	44.70	43.43	50.80	9.68	55.58	44.68	41.71

All dimensions for reference only

• D shaped panel cut-out dimensions

TVSIY (D38999/25) – hermetic, metal solder mounting receptacle

Part number reference.
See how to order, pages 43, 44 to complete.
TVSIY-XX-XXX
TVSIYN-XX-XXX
D38999/25

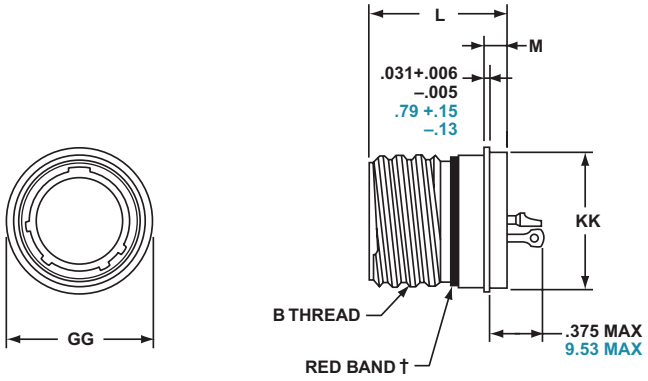

† Red band indicates fully mated

Inches

Shell Size	MS Shell Size Code	B Thread Class 2A 0.1P-0.3L-TS (Plated)	L +.011 –.005	M +.006 –.005	GG Dia. +.011 –.010	KK Dia. +.001 –.005
9	A	.6250	.806	.125	.750	.672
11	B	.7500	.806	.125	.844	.781
13	C	.8750	.806	.125	.969	.906
15	D	1.0000	.806	.125	1.094	1.031
17	E	1.1875	.806	.125	1.218	1.156
19	F	1.2500	.806	.125	1.312	1.250
21	G	1.3750	.806	.125	1.438	1.375
23	H	1.5000	.838	.156	1.563	1.500
25	J	1.6250	.838	.156	1.688	1.625

Millimeters

Shell Size	MS Shell Size Code	L +.28 –.00	M +.15 –.13	GG Dia. +.28 –.25	KK Dia. +.03 –.13
9	A	20.47	3.18	19.05	17.07
11	B	20.47	3.18	21.44	19.84
13	C	20.47	3.18	24.61	23.01
15	D	20.47	3.18	27.79	26.19
17	E	20.47	3.18	30.94	29.36
19	F	20.47	3.18	33.32	31.75
21	G	20.47	3.18	36.53	34.93
23	H	21.29	3.96	39.70	38.10
25	J	21.29	3.96	42.88	41.28

All dimensions for reference only

TVSHIY (D38999/27) – hermetic, metal weld mounting receptacle

Part number reference.
See how to order, pages 43, 44 to complete.
TVSHIY-XX-XXX
TVSHIYN-XX-XXX
D38999/27

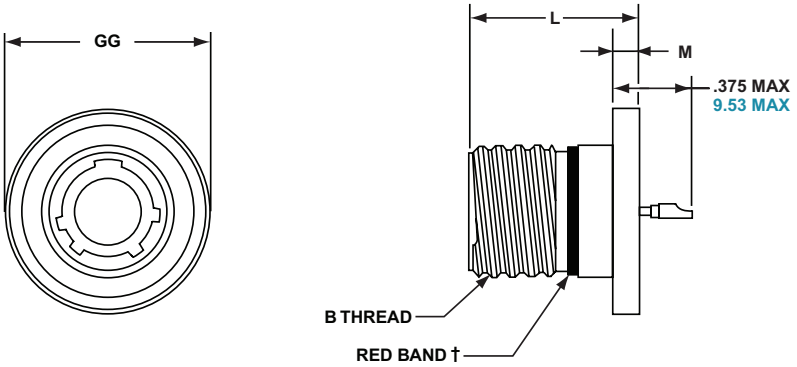

† Red band indicates fully mated

Inches

Shell Size	MS Shell Size Code	B Thread Class 2A 0.1P-0.3L-TS (Plated)	L +.011 –.000	M +.006 –.005	GG Dia. +.010 –.000
9	A	.6250	.806	.125	.973
11	B	.7500	.806	.125	1.095
13	C	.8750	.806	.125	1.221
15	D	1.0000	.806	.125	1.347
17	E	1.1875	.806	.125	1.434
19	F	1.2500	.806	.125	1.579
21	G	1.3750	.806	.125	1.721
23	H	1.5000	.838	.156	1.886
25	J	1.6250	.838	.156	1.973

Millimeters

Shell Size	MS Shell Size Code	L +.28 –.00	M +.15 –.13	GG Dia. +.25 –.00
9	A	20.47	3.18	24.71
11	B	20.47	3.18	27.81
13	C	20.47	3.18	31.01
15	D	20.47	3.18	34.21
17	E	20.47	3.18	36.42
19	F	20.47	3.18	40.11
21	G	20.47	3.18	43.71
23	H	21.29	3.96	47.90
25	J	21.29	3.96	50.11

All dimensions for reference only

TV Breakaway Fail Safe Connectors

quick-disconnect with an axial pull of lanyard

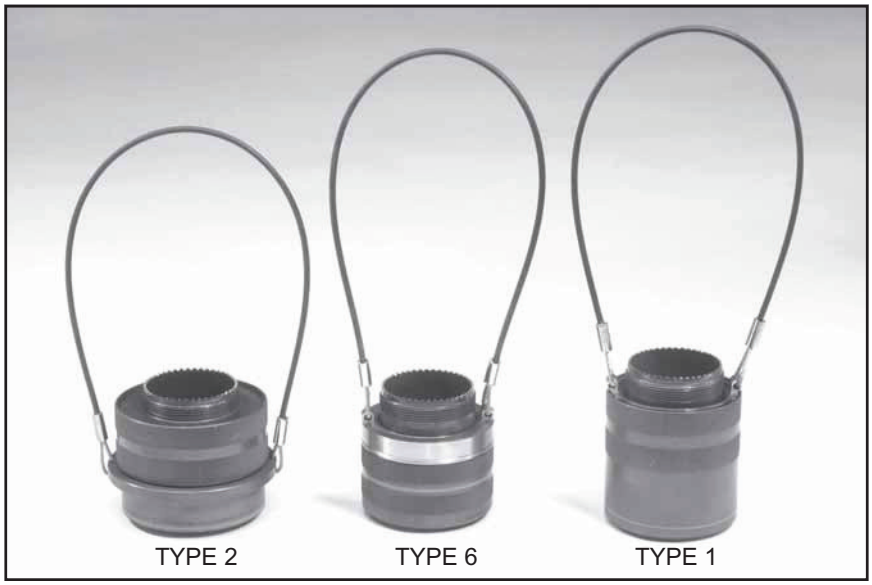

Amphenol offers a variety of lanyard plug styles including MIL-STD-1760 types 1, 2 and 6 for Stores Management applications.

Amphenol Tri-Start Breakaway Fail Safe Connectors provide unequalled performance in environments requiring instant disengagement.

Designed to provide quick disconnect of a connector plug and receptacle with an axial pull on the lanyard, the "Breakaway" Fail Safe connector family offers a wide range of electrical and mechanical features:

- Instant decoupling and damage free separation
- Completely intermateable with standard receptacles (D38999/20 and /24)
- Inventory support commonality through the use of standard insert arrangements and contacts

Breakaway un-mating is initiated by applying a pull force to the lanyard which causes the operating sleeve on the plug to move away from the receptacle. Coupling segments on the plug then move away from the mating receptacle while expanding, thus releasing the receptacle. After completion of the un-mating sequence, spring compression returns the sleeve and segments to their original positions. Un-mating of the plug may also be accomplished by normal rotation of the coupling ring without affecting the breakaway capability.

Breakaway with Coax Contacts

The Tri-Start Breakaway Fail Safe connector features which provide EMI/EMP shielding in excess of MIL-DTL-38999 Series III requirements:

- Solid metal-to-metal coupling
- EMI grounding fingers
- Conductive finishes

Amphenol Breakaway Fail Safe connectors are qualified to MIL-DTL-38999/29, /30 and /31 (for MIL-STD-1760 Stores Management applications). In fact, Amphenol offers more qualified Breakaway shell size and insert combinations than any other QPL supplier.

In addition to standard Breakaway connectors, Amphenol also manufactures custom breakaway connectors including those with:

- Highly durable non-metallic operating sleeves in a variety of lengths and diameters
- Increased pull-force capability
- Low-profile designs
- Custom lanyard lengths and backshells
- Low force separation capabilities
- Low insertion/separation force contacts
- Non-cadmium finishes

Whether you need a standard Breakaway, one of our custom Breakaways or, a unique Breakaway design, please contact your local Amphenol representative.

Special configuration Fail Safe used on space telescope application. Lanyard is replaced by a swivel ring for remote disconnect and "wing arms" have been added for manual actuation accessibility by gloved astronauts.

Contact Amphenol Aerospace for more information on breakaway, quick-disconnect connectors. Other Amphenol cylindrical families (MIL-DTL-38999 Series I & II, MIL-C-26482, MIL-C-83723) also offer breakaway quick-disconnect connectors.

D38999/29 & D38999/30
TV Breakaway Fail Safe – crimp, metal
lanyard release plug

Part number reference.
See how to order, pages 29, 30 to complete.
D38999/29 (Pins Only)
D38999/30 (Sockets Only)

88-5565XX-XX
91-5565XX-XX

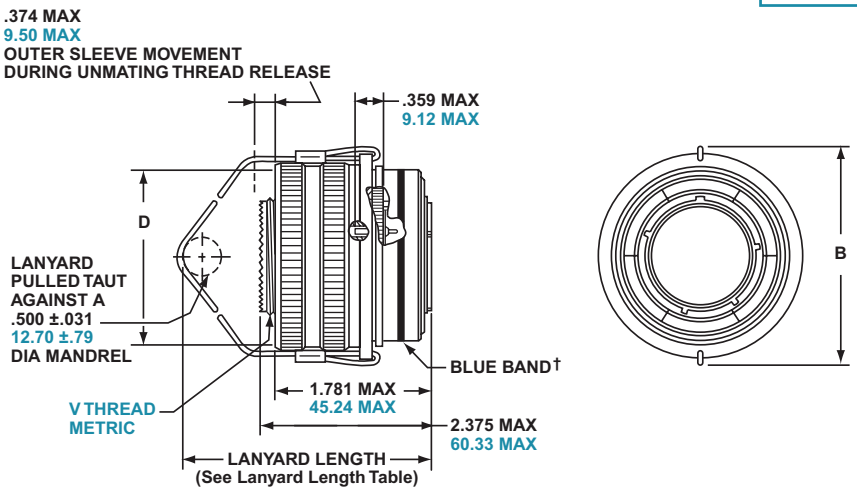

† Blue band indicates rear release contact retention system

Inches

Shell Size	MS Shell Size Code	B Max	D Max Accessory Dia.
11	B	1.846	1.109
13	C	1.972	1.250
15	D	2.079	1.375
17	E	2.205	1.500
19	F	2.301	1.625
21	G	2.472	1.750
23	H	2.594	1.875
25	J	2.705	2.000

Millimeters

Shell Size	MS Shell Size Code	B Max	D Max Accessory Dia.	V Thread Metric
11	B	46.89	28.17	M15X1.0-6g
13	C	50.09	31.75	M18X1.0-6g
15	D	52.81	34.93	M22X1.0-6g
17	E	56.01	38.10	M25X1.0-6g
19	F	58.45	41.28	M28X1.0-6g
21	G	62.79	44.45	M31X1.0-6g
23	H	65.89	47.63	M34X1.0-6g
25	J	68.71	50.08	M37X1.0-6g

All dimensions for reference only

D38999/29 & D38999/30 TV Breakaway Fail Safe

lanyard release plug insert availability, how to order

INSERT AVAILABILITY

Insert Arrangement	Service Rating	Total Contacts	Contact Size 22D	20	16	12	12 Coax	8 Coax*	8 Twinax
11-2	I	2			2				
11-35	M	13	13						
11-98	I	6		6					
13-4	I	4			4				
13-8	I	8		8					
13-35	M	22	22						
13-98	I	10		10					
15-5	II	5			5				
15-15	I	15		14	1				
15-18	I	18		18					
15-19	I	19		19					
15-35	M	37	37						
15-97	I	12		8	4				
17-6	I	6				6			
17-8	II	8			8				
17-26	I	26		26					
17-35	M	55	55						
17-99	I	23		21	2				
19-11	II	11			11				
19-32	I	32		32					
19-35	M	66	66						
21-11	I	11				11			
21-16	II	16			16				
21-35	M	79	79						
21-39	I	39		37	2				
21-41	I	41		41					
23-21	II	21			21				
23-35	M	100	100						
23-53	I	53		53					
23-54	M	53	40		9	4			
23-55	I	55		55					
25-4	I	56		48	8				
25-19	I	19				19			
25-20	N	30		10	13		4		3
25-24	I	24			12	12			
25-29	I	29			29				
25-35	M	128	128						
25-43	I	43		23	20				
25-46	I	46		40	4			2*	
25-61	I	61		61					

Tri-Start Lanyard Separation Forces		
Shell Size	Straight Pull (lbs. max.)	15 Degree Pull (lbs. max.)
11 13 15	45	55
17 19 21 23 25	90	100

* For RG 180/U and RG 195/U cables only. (Check Amphenol, Sidney, NY for other cable applications.
For availability of other insert arrangements consult Amphenol, Sidney, NY.
For accessories for lanyard release plugs see page 33.

TABLE I
INSERT ARRANGEMENT CODE

Basic Part Number	MIL-DTL-38999 Insert Arrangement
88/91-556508	11-2
06	11-35
07	11-98
10	13-4
11	13-8
13	13-98
14	13-35
18	15-5
23	15-15
22	15-18
19	15-19
20	15-35
27	17-6
28	17-8
29	17-26
30	17-35
31	17-99
37	19-11
39	19-32
40	19-35
47	21-11
48	21-16
49	21-35
50	21-41
51	21-39
57	23-21
58	23-35
59	23-53
61	23-54
60	23-55
66	25-19
74	25-20
67	25-29
68	25-35
69	25-43
70	25-61
71	25-4
72	25-24

TABLE II
LANYARD LENGTH CODES

Lanyard Length (in.) ± .236	Lanyard Length (mm) ± 6.0	Lanyard Length Code For Part Number
4.016	102	A
4.528	115	B
5.000	127	C
5.512	140	D
6.024	153	E
6.535	166	F
7.008	178	G
7.520	191	H
7.992	203	I
8.503	216	J
9.016	229	K
9.528	242	L
10.000	254	M
10.512	267	N
11.024	280	P
11.535	293	R
12.008	305	S
12.520	318	T
13.031	331	U
14.016	356	V
15.000	381	W
16.024	407	X
17.008	432	Y
18.031	458	Z

D38999/29 & D38999/30 TV Breakaway Fail Safe

lanyard release plug – how to order, cont.

HOW TO ORDER - BY MILITARY PART NUMBER FAIL SAFE D38999/29 & D38999/30

Ordering procedure for example part number D38999/29FB35EN is shown below:

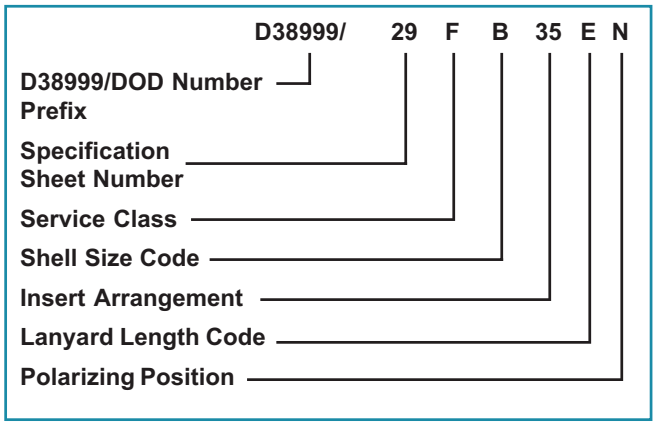

DOD Number Prefix

D38999/ designates MIL-DTL-38999, Series III Tri-Start Connectors

Specification Sheet Number

29 designates Lanyard Release Plug with pin contacts
30 designates Lanyard Release Plug with socket contacts

Service Class

F designates electroless nickel plated aluminum, optimum EMI shielding effectiveness –65dB @ 10 GHz specification min., 48 hour salt spray, 200°C
W designates corrosion resistant olive drab cadmium plate aluminum, 500 hour extended salt spray, EMI –50dB @ 10 GHz specification min., 175°C

Shell Size Code

MIL-DTL-38999, Sizes 11 thru 25

A*	B	C	D	E	F	G	H	J	MIL Shell Size
9*	11	13	15	17	19	21	23	25	Amphenol Shell Size

* Shell size 9 not available

Insert Arrangement

MIL-DTL-38999, see insert availability chart on page 29.

Lanyard Length Code

See Table II (page 29) for lanyard length code number.

Polarizing Position

For alternate positions of connector (to prevent cross-mating) see alternate positioning on page 8. (N indicates normal)

HOW TO ORDER - BY PROPRIETARY PART NUMBER FAIL SAFE 88-5565( ) & 91-5565( )

Ordering procedure for example part number 88-556529-EP is shown below:

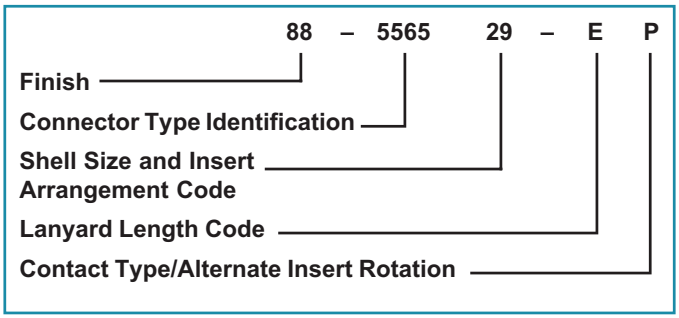

Finish

88 designates corrosion resistant olive drab cadmium plate over nickel, 500 hour extended salt spray, EMI –50dB @ 10 GHz specification min., 175°C

91 designates electroless nickel plated aluminum, optimum EMI shielding effectiveness –65dB @ 10 GHz specification min., 48 hour salt spray, 200°C

These are standard finishes. Consult Amphenol Aerospace, Sidney, NY for variations.

Connector Type Identification

88/91-5565 designates MIL-DTL-38999, Series III Tri-Start Lanyard Release Plug

Shell Size and Insert Arrangement Code

Shell sizes are MIL-DTL-38999, Series III from 11 thru 25. The basic part number selected specifies the insert arrangement. See Table I (page 29) for coded part number that correlates to insert arrangement.

Lanyard Length Code

See Table II (page 29) for lanyard length code number.

Contact Type/Alternate Rotations

P designates pin, S designates socket for normal positioning of contacts. When an alternate position of the connector is required to prevent cross-mating, a different letter (other than P or S) is used. See alternate positioning on page 8, then convert to Amphenol proprietary coding by the following chart.

Pin Contacts		Socket Contacts	
MS Letter	Amphenol Letter	MS Letter	Amphenol Letter
PN	P (normal)	SN	S (normal)
PA	G	SA	H
PB	I	SB	J
PC	K	SC	L
PD	M	SD	N
PE	R	SE	T

D38999/31 for MIL-STD-1760 TV Breakaway Fail Safe – crimp, metal lanyard release plug

PIN CONTACTS ONLY,
SHELL SIZE 25 ONLY

Part number reference.
See how to order, page 32 to complete.

D38999/31

88-555875/76
91-555875/76 — **Type 6**

88-558518/19
91-558518/19 — **Type 2**

T3W-16B25-XXXX — **Type 1**

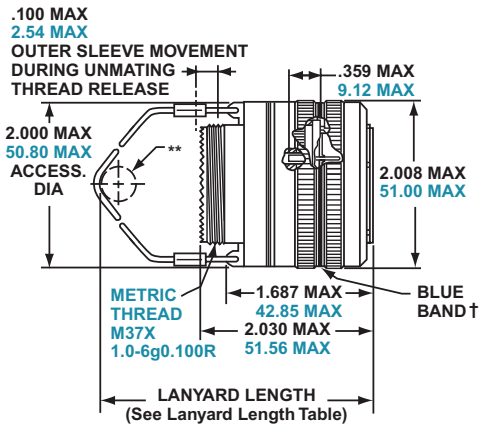

TYPE 6

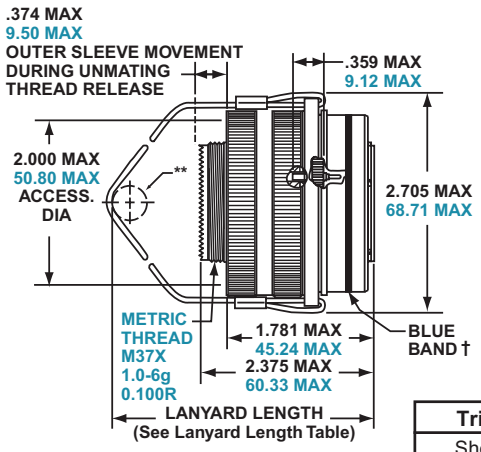

TYPE 2

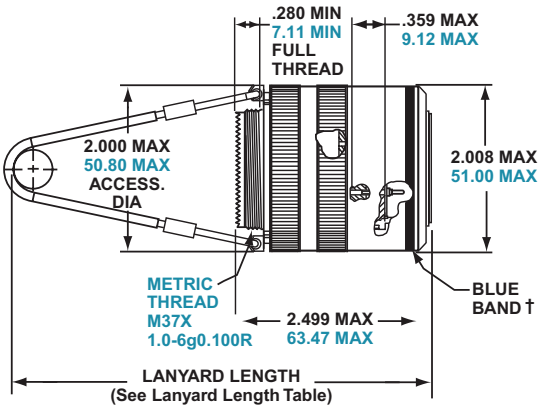

TYPE 1 (LONGER SHELL)

† Blue band indicates rear release contact retention system
** Lanyard pulled taut against a .500 ± .13 dia. mandrel
All dimensions for reference only

Tri-Start Lanyard Separation Forces

Shell Size	Straight Pull (lbs. max.)	15 Degree Pull (lbs. max.)
25	90	100

INSERT AVAILABILITY FAIL SAFE D38999/31 FOR MIL-STD-1760

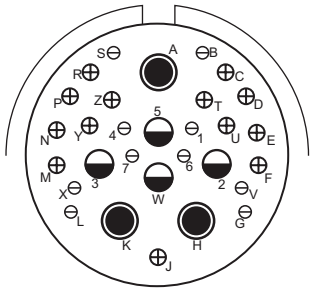

25-20
Primary Interface Signal Set

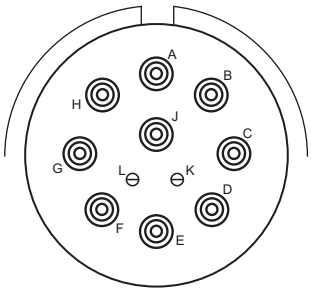

25-11
Auxillary Power Signal Set

Contact Legend

8 (twinax) 10 (power) 12 (coax) 16 20

Pin Contact Data for MIL-STD-1760

Insert Arrangement	Service Rating	Total Contacts	Contact 20	16	12 (coax)	8 (twinax)
25-20	N	30	10	13	4	3

Contacts for 25-20 Pattern

Shell Size	Arrangement Number	Number of Contacts	Size Contacts	Service Rating	Contact Location	Standard Contact Pin	Standard Contact Socket
25	-20	3	8	Twinax	A, H, K	M39029/90-529	M39029/91-530
		4	12	Coax	2, 3	M39029/28-211	M39029/75-416
					W, 5	M39029/102-558	M39029/103-559
		13	16	N	C, D, E, F, J, M, N, P R, T, U, Y, Z	M39029/58-364	M39029/56-352
		10	20	N	B, G, L, S V, X, 1, 4 6, 7	M39029/58-363	M39029/56-351

Insert Arrangement	Service Rating	Total Contacts	Contact Size 20	10 (power)
25-11	N	11	2	9

D38999/31 for MIL-STD-1760 TV Breakaway Fail Safe for Stores Management applications

lanyard release plug – how to order

HOW TO ORDER - BY MILITARY PART NUMBER FAIL SAFE D38999/31

Ordering procedure for example part number D38999/31WE20PN1 is shown below:

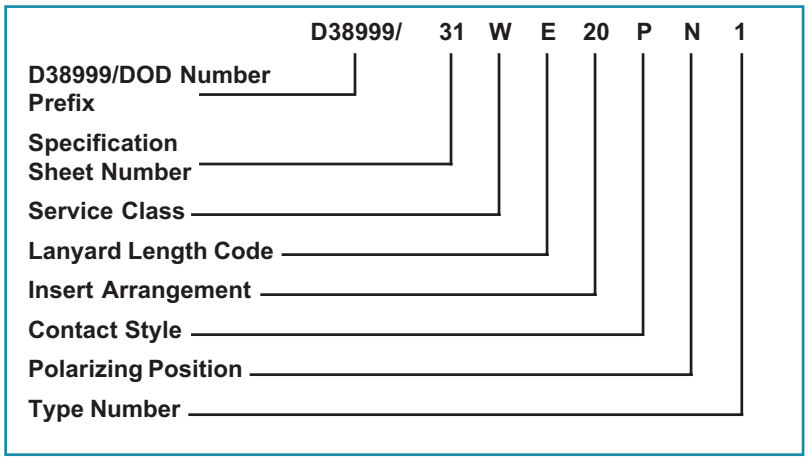

DOD Number Prefix

D38999/ designates MIL-DTL-38999, Series III Tri-Start Connectors

Specification Sheet Number

31 designates Lanyard Release Plug for MIL-STD-1760 with pin contacts

Service Class

F designates electroless nickel plated aluminum, optimum EMI shielding effectiveness –65dB @ 10 GHz specification min., 48 hour salt spray, 200°C

W designates corrosion resistant olive drab cadmium plate aluminum, 500 hour extended salt spray, EMI –50dB @ 10 GHz specification min., 175°C

Lanyard Length Code

See Table III for lanyard length code number.

Insert Arrangement

Only 11 or 20 are available contact arrangement numbers. See page 31.

Contact Style

Only P and A are valid contact style options. P replaces the “no designation” option in the PIN on revision C and eariler revisions of the Mil-Spec. A designates supplied less contacts.

Polarizing Positions

N is required for normal position.

Type Number

Type 1, 2 or 6. See drawings on page 31.

For accessories for lanyard release plugs see page 33.

TABLE III
LANYARD LENGTH CODES

Lanyard Length (in.) ± .236	Lanyard Length (mm.) ± 6.0	Lanyard Length Code For Part Number
6.024	153.0	E
6.535	166.0	F
7.008	178.0	G
7.520	191.0	H
7.992	203.0	I
8.504	216.0	J
9.016	229.0	K
9.528	242.0	L

TV Breakaway Fail Safe – accessories
backshells, dummy contacts, wire combs

Amphenol offers a full range of accessories that are designed to enhance the performance of Amphenol Breakaway connectors.

Low Profile Backshells in shell size 25 with the following features:

- Olive drab cadmium finish
- 90 degree termination
- Low profile design with three heights ranging from 1.010 to 1.660
- Rear access covers to help ease harness assembly and repairability
- Amphenol part numbers: 10-640000-XXX and 10-559672-XXX

Backshells are offered for use with Breakaway Fail Safe Connectors in three heights.

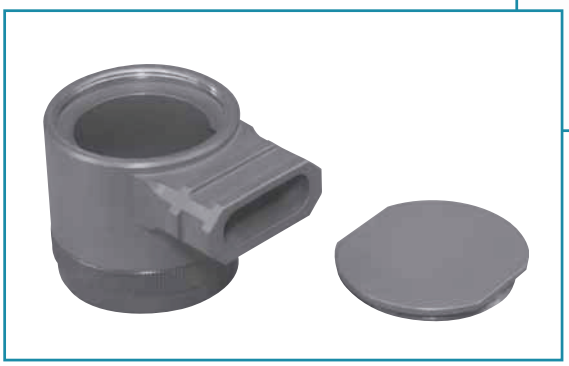

Dummy Contacts

- Available in size 12 and size 8
- Provide a cost effective alternative for sealing unused contact cavities
- Size 8 part number: T3-4008-59P
- Size 12 part number: T3-4012-59P

Wire Combs

- Available for the 25-20 insert pattern to help to stabilize and prevent contact side loading
- Amphenol part number: 21-33626-XXX

For information on how to order these accessory products for Breakaway Fail Safe connectors consult Amphenol Aerospace.

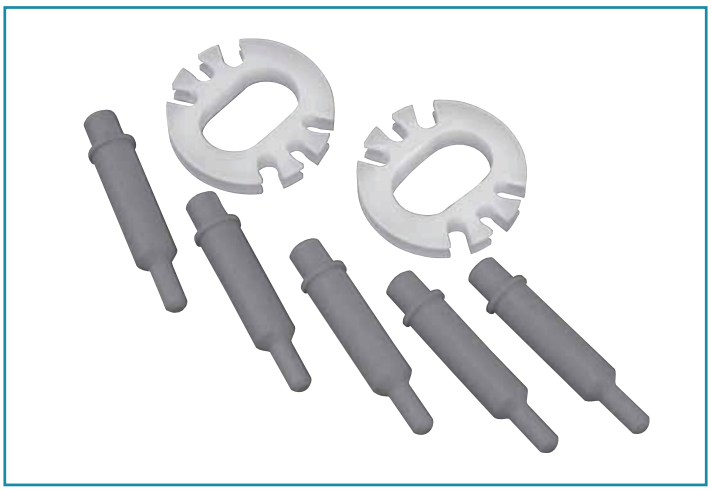

Accessory products for Breakaway Connectors: Dummy Contacts and Wire Combs

Tri-Start – accessories
receptacle protection cap

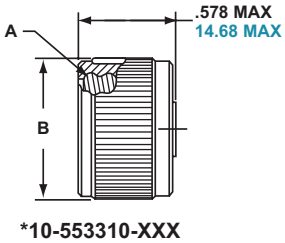

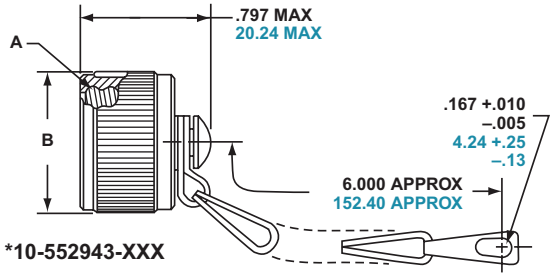

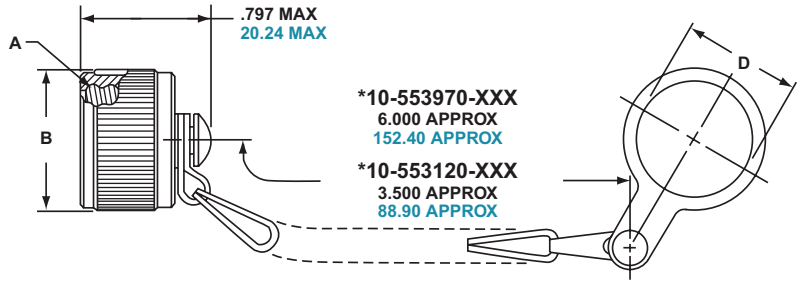

* To complete order number, add shell size and suffix number. For example, shell size 11 with olive drab cadmium nickel base, 10-552943-119

Inches

Shell Size	A Thread Class 2B 0.1P-0.3L-TS	B Dia. Max	D Dia. +.010 –.000
9	.6250	.875	.703
11	.7500	1.000	.844
13	.8750	1.125	1.016
15	1.0000	1.250	1.141
17	1.1875	1.438	1.266
19	1.2500	1.500	1.391
21	1.3750	1.625	1.516
23	1.5000	1.750	1.641
25	1.6250	1.875	1.766

Finish	10-No Suffix
Olive drab, cadmium, nickel base	-XX9
Electroless nickel	-XXG

Consult Amphenol Aerospace for availability of stainless steel protection caps.

All dimensions for reference only.
For MS protection caps, see page 40.

Millimeters

Shell Size	MS Shell Size Code	B Dia. Max	D Dia. +.25 –.00
9	A	22.23	17.86
11	B	25.40	21.44
13	C	28.58	25.81
15	D	31.75	28.98
17	E	36.53	32.16
19	F	38.10	35.33
21	G	41.28	38.51
23	H	44.45	41.68
25	J	47.63	44.86

Tri-Start - accessories
plug protection cap

*10-552944-XXX

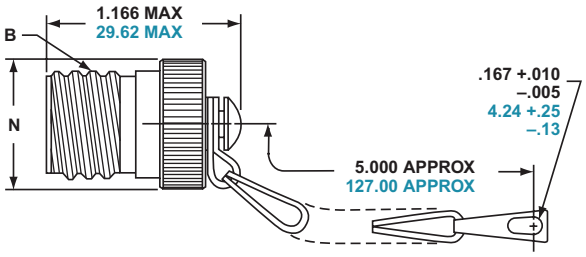

*10-553998-XXX

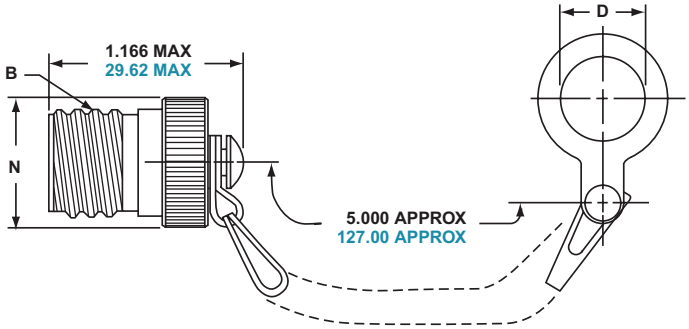

* To complete order number, add shell size and suffix number. For example, shell size 11 with olive drab cadmium nickel base, 10-552944-119

Inches

Shell Size	A Thread Class 2B 0.1P-0.3L-TS	D Dia. +.010 –.000	N Dia. Max
9	.6250	.516	.895
11	.7500	.641	1.000
13	.8750	.766	1.171
15	1.0000	.891	1.299
17	1.1875	1.016	1.436
19	1.2500	1.141	1.543
21	1.3750	1.266	1.670
23	1.5000	1.343	1.787
25	1.6250	1.516	1.914

Finish	10-No Suffix
Olive drab, cadmium, nickel base	-XX9
Electroless nickel	-XXG

Consult Amphenol Aerospace for availability of stainless steel protection caps.

All dimensions for reference only.
For MS protection caps, see page 40.

Millimeters

Shell Size	MS Shell Size Code	D Dia. +.25 –.00	N Dia. Max
9	A	13.11	22.73
11	B	16.28	25.40
13	C	19.46	29.74
15	D	22.63	32.99
17	E	25.81	36.47
19	F	28.98	39.19
21	G	32.16	42.42
23	H	34.11	45.39
25	J	38.51	48.62

Tri-Start – accessories
dummy receptacle

Part number reference.
See note below to complete.

*** 10-553974-XXX**

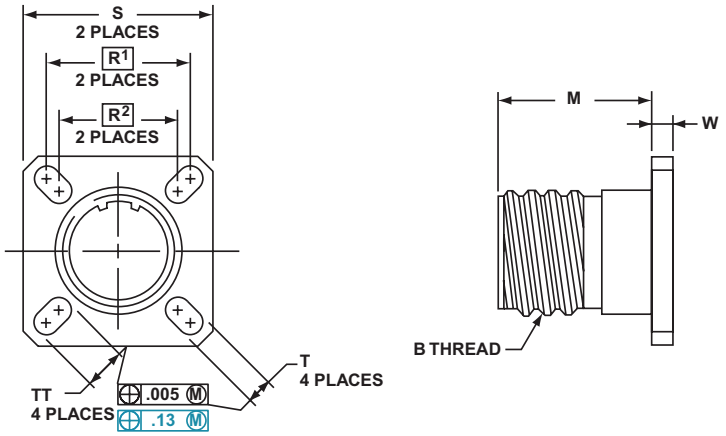

* To complete order number, add shell size and suffix number. For example, shell size 11 with olive drab cadmium nickel base, 10-553974-119

Finish	10-No Suffix
Olive drab, cadmium, nickel base	-XX9
Electroless nickel	-XXG

Inches

Shell Size	MS Shell Size Coded	B Thread Class 2A 0.1P-0.3L-TS (Plated)	M +.020 –.000	R1	R2	S ±.010	T +.008 –.006	W ±.010	TT +.008 –.006
9	A	.6250	.822	.719	.594	.938	.128	.098	.216
11	B	.7500	.822	.812	.719	1.031	.128	.098	.194
13	C	.8750	.822	.906	.812	1.125	.128	.098	.194
15	D	1.0000	.822	.969	.906	1.219	.128	.098	.173
17	E	1.1875	.822	1.062	.969	1.312	.128	.098	.194
19	F	1.2500	.822	1.156	1.062	1.438	.128	.098	.194
21	G	1.3750	.791	1.250	1.156	1.562	.128	.125	.194
23	H	1.5000	.791	1.375	1.250	1.688	.154	.125	.242
25	J	1.6250	.791	1.500	1.375	1.812	.154	.125	.242

Millimeters

Shell Size	MS Shell Size Code	M +.51 –.00	R1	R2	S ±.25	T +.20 –.15	W ±.25	TT +.20 –.15
9	A	20.88	18.26	15.09	23.83	3.25	2.49	5.49
11	B	20.88	20.62	18.26	26.19	3.25	2.49	4.93
13	C	20.88	23.01	20.62	28.58	3.25	2.49	4.93
15	D	20.88	24.61	23.01	30.96	3.25	2.49	4.93
17	E	20.88	26.97	24.61	33.32	3.25	2.49	4.93
19	F	20.88	29.36	26.97	36.53	3.25	2.49	4.93
21	G	20.09	31.75	29.36	39.67	3.25	3.18	4.93
23	H	20.09	34.93	31.75	42.88	3.91	3.18	6.15
25	J	20.09	38.10	34.93	46.02	3.91	3.18	6.15

All dimensions for reference only

Designates true position dimensioning

Tri-Start – accessories
cable clamps

Straight Style
***10-552681-XXX metal coupling**

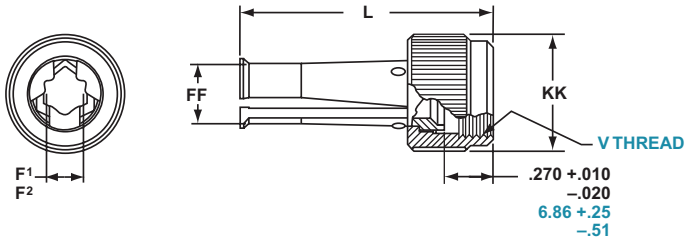

90 Degree Elbow Style
***10-552682-XXX metal coupling**

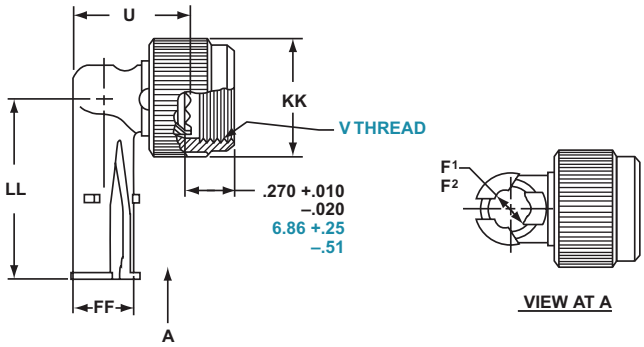

* To complete order number, see suffix chart below. Examples:
Clamp with metal couplng nut for shell size 11 with olive drab cadmium nickel base, 10-552681-119.

Finish	10-No Suffix
Olive drab, cadmium, nickel base	-XX9
Electroless nickel	-XXG

Inches

Shell Size	MS Shell Size Code	F1 Min. Dia. Cable	F2 Max. Dia. Cable	L Max.	U Max.	FF Dia. Max.	KK Dia. Max.	LL Max.
9	A	.094	.203	1.431	.656	.347	.629	1.015
11	B	.141	.250	1.431	.688	.394	.756	1.062
13	C	.172	.323	1.431	.750	.467	.883	1.125
15	D	.203	.422	1.431	.859	.566	1.011	1.328
17	E	.234	.500	1.431	.937	.644	1.138	1.392
19	F	.265	.562	1.431	1.000	.706	1.265	1.453
21	G	.297	.625	1.492	1.062	.769	1.393	1.609
23	H	.328	.703	1.492	1.141	.847	1.488	1.656
25	J	.359	.765	1.492	1.203	.909	1.616	1.719

Millimeters

Shell Size	MS Shell Size Code	F1 Min. Dia. Cable	F2 Max. Dia. Cable	L Max.	U Max.	V Thread Metric	FF Dia. Max.	KK Dia. Max.	LL Max.
9	A	2.39	5.16	36.35	16.66	M12X1-6H	8.81	15.98	25.78
11	B	3.58	6.35	36.35	17.48	M15X1-6H	10.01	19.20	26.97
13	C	4.37	8.20	36.35	19.05	M18X1-6H	11.86	22.43	28.58
15	D	5.16	10.72	36.35	21.82	M22X1-6H	14.38	25.68	33.73
17	E	5.94	12.70	36.35	23.80	M25X1-6H	16.36	28.91	35.36
19	F	6.73	14.27	36.35	25.40	M28X1-6H	17.93	32.13	36.91
21	G	7.54	15.88	37.90	26.97	M31X1-6H	19.53	35.38	40.87
23	H	8.83	17.86	37.90	28.98	M34X1-6H	21.51	37.80	42.06
25	J	9.12	19.43	37.90	30.56	M37X1-6H	23.09	41.05	43.66

All dimensions for reference only.

Tri-Start – accessories
universal “header assembly” for flex print or PC board mounting

Mounts to all MIL-DTL-38999 and MIL-C-26482 Connectors

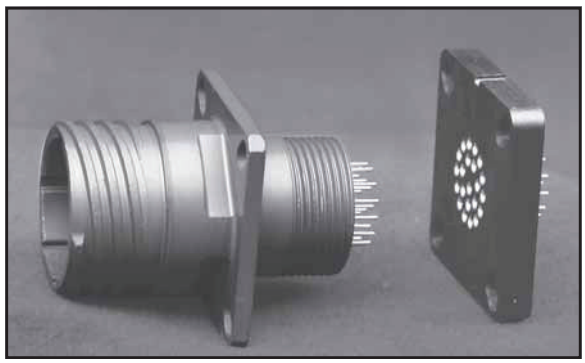

Headers provide easy separation of the connector from the PC board.

The use of connectors with printed circuit termination is rapidly gaining popularity due to the rise of high volume, vapor phase or wave solder manufacturing processes. Termination of this style of connector to flex print or a printed circuit board represents a major cost in the manufacturing process for users. When adding flex or printed circuit board assemblies to an expensive filter or filter/transient protection connector, the total cost of a failed solder joint, a bent pin, or an unanticipated electrical failure becomes prohibitive. The universal header assembly from Amphenol will provide for easy separation of the connector from the board on these occasions.

Header Assemblies Provide Cost Savings

Incorporation of the header assembly provides the user with time and cost saving potentials. These header assemblies can be vapor phase or wave soldered to flex or printed circuit boards prior to the receipt of the EMI/EMP connector. Headers can be installed to standard connectors, allowing for electrical testing that would adversely affect the sensitive diodes, MOV’s or capacitors in the EMI/EMP connectors. Expensive connector assemblies can be easily removed from and reattached to the header assembly as the manufacturing process dictates.

Mounting Applications

Shell modifications are recommended, but are not necessary. The header assembly can be attached to connectors with standard flange placement or directly to the circuit board. The ideal application would involve either a single flange moved all the way to the rear of the connector or a double flange. Cinch nuts can be installed in either flange to allow easier mounting to the panel or the header assembly. The forward flange would mount the connector to the panel; the rear flange would be used to mount the header assembly. Various types of captivated or loose attaching screws can be utilized for unique applications.

Amphenol universal headers are slotted to allow mounting to all series of MIL-DTL-38999 or MIL-C-26482 connectors without special alterations. They are of similar dimension as the flange of the mounting connector and would be approximately .185 inches (4.70 mm) thick.

Incorporates a Shorter Pin/Socket Contact

The heart of the header assembly is a short pin/socket contact. The tail of the contact would accommodate standard through-hole diameters and thickness of the flex or printed circuit board materials. The socket is imbedded in the molded material, making electrical engagement with the printed circuit tail of the connector.

Cylindrical Configuration

- 3 PCB stickout dimensions are available.
- Size 22 contacts use .175 thick headers
- Size 16 to 20 contacts use .195 thick headers
- Consult Amphenol, Sidney NY for additional configurations.
- Headers for cylindrical connectors accommodate up to 128 pins. Consult Amphenol catalogs for mating connector contact layouts (12-092 and 12-090 for MIL-DTL-38999 and 12-070 for MIL-C-26482)

Mounting to Rectangular ARINC Connectors

- Headers for ARINC connector arrangements accommodate up to 150 pins
- Consult Amphenol, Sidney, NY for ARINC configurations and detailed dimensions.

Materials

- Body is molded from Torlon or PPS (Polyphenylene Sulfide)
- Electrical engagement areas of the header contact are plated with .00003 inches minimum of gold over .00005 inches minimum of nickel.

See drawing of standard header on next page.

Tri-Start – accessories

universal “header assembly” for flex print or PC board mounting, cont.

The drawing below shows the standard universal adapter for use with MIL-DTL-38999 and MIL-C-26482 connectors. Consult Amphenol Aerospace, Sidney NY for drawings of headers for ARINC configurations.

Assembly Part Number	Shell Size	F Radius	G ± .005	S ± .005	T + .008 – .006	R1 TP†	R2 TP†	TT + .008 – .006
21-904008-XX( )	8/9	.094		.938	.128	.719	.594	.216
21-904010-XX( )	10/11	.094		1.031	.128	.812	.719	.194
21-904012-XX( )	12/13	.094		1.125	.128	.906	.812	.194
21-904014-XX( )	14/15	.125		1.219	.128	.969	.906	.173
21-904016-XX( )	16/17	.125		1.312	.128	1.062	.969	.194
21-904018-XX( )	18/19	.125		1.438	.128	1.156	1.062	.194
21-904020-XX( )	20/21	.125		1.562	.128	1.250	1.156	.194
21-904022-XX( )	22/23	.125		1.688	.154	1.375	1.250	.242
21-904024-XX( )	24/25	.125		1.812	.154	1.500	1.375	.242

See Suffix Chart

Assemblies containing Size 22 contacts only: .175
Assemblies containing Size16 or 20 contacts: .195

† TP designates true position dimensioning.

HOW TO ORDER INFORMATION

For Universal Adapter Used with MIL-DTL-38999 Connectors

Use coded number as follows:

21-9040 XX - XX X

Designates Amphenol Interface Adapter

Shell size designation for MIL-DTL-38999 Series III. See Suffix chart.

Arrangement number - See MIL-STD-1560 or MIL-STD-1669. See insert availability charts on pages 6 and 7.

Contact PCB Stickout designation See Suffix chart.

Universal adapters are also used with MIL-DTL-38999 Series I and II and with MIL-C-26482, Series 1 and 2. For how to order information on adapters to be used with ARINC connectors, consult Amphenol, Sidney NY.

ASSEMBLY NUMBER SUFFIX CHART

Shell Size Designation*	Arrangement Number Suffix***	Contact PCB Stickout**	
		Suffix	B ± .015 Stickout
08	Insert Arrangement Suffix from MIL-STD-1560 or MIL-STD-1669	1	.120
10		2	.185
12		3	.270
14			
16			
18			
20			
22			
24			

*Shell size designation for MIL-DTL-38999 Series I, II, III and IV and MIL-C-26482 Series 1 and 2.
Examples: Shell size 9 use 08. Shell size 25 use 24.

** Size 22 contacts available in all 3 stickout lengths.
Size 16 and 20 contacts available only in .185 and .270 lengths.

*** Insert arrangement 14-97 and 15-97 are not available at this time. Consult Amphenol, Sidney NY for information.

Tri-Start – accessories
contacts, sealing plugs, protection caps

STANDARD 500 CYCLE CONTACTS FOR TV AND CTV, P & S

Contact Size	TV/CTV Pins		TV/CTV Sockets	
	Military No.	Supersedes	Military No.	Supersedes
8 (Coax)*	M39029/60-367	MS27536	M39029/59-366	MS27535
8 (Power)	N/A	N/A	N/A	N/A
8 (Twinax)	M39029/90-529**	N/A	M39029/91-530	N/A
10 (Power)	M39029/58-528	N/A	M39029/56-527	N/A
12	M39029/58-365	MS27493-12	M39029/56-353	MS27490-12
16	M39029/58-364	MS27493-16	M39029/56-352	MS27490-16
20	M39029/58-363	MS27493-20	M39029/56-351	MS27490-20
22D	M39029/58-360	MS27493-22D	M39029/56-348	MS27490-22D
4	N/A	N/A	N/A	N/A
0	N/A	N/A	N/A	N/A

Above part numbers include standard 500 cycle finish designation - gold plating over suitable underplate in accordance with MIL-C-39029. For other finish variations, consult Sidney, NY.
*For use with RG180B/U and RG195A/U cable. For other size 8 coax or optional sizes 12 and 16 coax contacts available for use in Tri-Start connectors, see catalog 12-130 or consult Amphenol, Sidney, NY

** For use with M17/M176-00002 cable.
† Optional design - see slash sheet MS39029.
For other contact options available for use in Tri-Start connectors, (wire wrap, thermocouple, fiber optic) consult Amphenol. Wire wrap data given on next page.

1500 CYCLE CONTACTS FOR CTV, CLASSES H & J

Contact Size	CTV Pins			CTV Sockets		
	Proprietary No	Military No	Supersedes	Proprietary No	Military No	Supersedes
12	10-597072-2X	M39029/107-623	–	10-597073-2X	M39029/106-617	–
16	10-597068-2X	M39029/107-622	–	10-597069-2X	M39029/106-616	–
20	10-597064-2X	M39029/107-621	–	10-597065-2X	M39029/106-615	–
22D	10-597058-3X	M39029/107-620	–	10-597061-2X	M39029/106-614	–

PLASTIC PROTECTION CAPS

Shell Size	Plug	Rececptacle
9	10-70506-14	10-70500-10
11	10-70506-16	10-70500-12
13	10-70500-18	10-70500-14
15	10-70500-20	10-70500-16
17	10-70500-22	10-70500-19
19	10-70500-24	10-70500-20
21	10-70524-1	10-70500-22
23	10-70506-28	10-70500-24
25	10-70500-28	10-70524-1

MS METAL PROTECTION CAPS

Shell Size	MS Shell Size Code	MS Plug Protection Cap	MS Receptacle Protection Cap
9	A	D38999/32W9X*	D38999/33W9X*
11	B	D38999/32W11X*	D38999/33W11X*
13	C	D38999/32W13X*	D38999/33W13X*
15	D	D38999/32W15X*	D38999/33W15X*
17	E	D38999/32W17X*	D38999/33W17X*
19	F	D38999/32W19X*	D38999/33W19X*
21	G	D38999/32W21X*	D38999/33W21X*
23	H	D38999/32W23X*	D38999/33W23X*
25	J	D38999/32W25X*	D38999/33W25X*

* To complete order number, replace X with applicable letter as follows:
R - designates eyelet type
N - designates washer type
MS metal protection caps are supplied with service class W which designates corrosion resistant olive drab cadmium plate aluminum.
Consult Amphenol, Sidney, NY for more detailed information on ordering MS Metal protection caps.

SEALING PLUGS

Contact Size	Proprietary No.	Military No.
8 (Coax)	10-482099-8	N/A
8 (Twinax)	T3-4008-59P	N/A
8 (Power)	10-405996-81	MS27488-8-1
10 (Power)	10-576225	N/A
12	10-405996-121	MS27488-12-1
16	10-405996-161	MS27488-16-1
20	10-405996-201	MS27488-20-1
22D	10-405996-221	MS27488-22-1
4	10-405996-41	MS27488-4-1
0	10-405996-01	MS27488-0-1

Tri-Start
contacts – printed circuit board, wire wrap

SOCKETS

PCB Socket Contacts	Size	Tail Dia	Contact Stickout Max/Min (See Illustration below) D38999/20 TVP00	D38999/26 TV06	D38999/24 TV07 Metal	D38999/24 TV07 Composite
10-497623-15	22D	.019	.291 .226	.316 .251	.285 .222	.242 .182
10-497623-25	22D	.019	.868 .803	.893 .828	.862 .802	.819 .759
10-497623-35	22D	.019	.348 .283	.373 .308	.342 .282	.299 .239
10-497623-45	22D	.019	.208 .143	.233 .168	.202 .142	.159 .099
10-497623-75	22D	.019	.146 .081	.171 .106	.140 .080	.097 .037
10-497623-105	22D	.019	.028 NS	.053 .000	.022 NS	.021 NS
10-497623-145	22D	.019	.609 .539	.634 .564	.603 .538	.560 .495
10-497623-155	22D	.019	.423 .358	.448 .383	.417 .357	.374 .314
10-497643-15	20	.019	.348 .294	.373 .319	.342 .293	.299 .250
10-497643-25	20	.019	.213 .159	.238 .184	.207 .158	.164 .115
10-497643-35	20	.019	.555 .501	.580 .526	.549 .500	.506 .457
10-497643-45	20	.019	.138 .084	.163 .109	.132 .083	.089 .040
10-497650-15	16	.040	.255 .201	.280 .226	.249 .200	.206 .157
Wire Wrap Contacts		Tail Square				
10-497577-15	22D	.025	.155 .090	.180 .115	.149 .089	.106 .046
10-497577-25	22D	.025	.002 NS	.027 NS	NS NS	NS NS
10-897577-35	22D	.025	.201 .136	.226 .161	.195 .135	.152 .092
10-497577-55	22D	.025	.566 .501	.591 .526	.560 .500	.517 .457
10-497621-15	20	.025	.151 .101	.176 .126	.145 .100	.102 .057
10-497621-25	20	.025	.605 .555	.630 .580	.599 .554	.556 .511
10-497621-35	20	.025	.308 .258	.333 .283	.302 .257	.259 .214

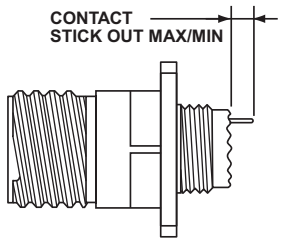

All dimensions for reference only.
Consult Sidney, NY for specific contact contour stickout data.
NS designates No Stickout.

See also catalog 12-170, Amphenol Cylindrical Connectors for PCB Applications. This catalog provides the most commonly used insert pattern pin-out drawings which have been tooled for the purpose of attaching cylindrical connectors to printed circuit boards.

PINS

PCB Pin Contacts	Size	Tail Dia	Contact Stickout Max/Min (See Illustration below) D38999/20 TVP00	D38999/26 TV06	D38999/24 TV07 Metal	D38999/24 TV07 Composite
10-407552-15	22M	.019	.335 .280	.360 .305	.329 .279	.286 .236
10-407552-55	22M	.019	.224 .169	.249 .194	.218 .168	.175 .125
10-407552-85	22M	.019	.060 .010	.085 .035	.054 .009	.011 NS
10-407552-95	22M	.019	NS	NS	NS	NS
10-407552-115	22M	.019	.002 NS	.023 NS	NS	NS
10-497640-15	20	.019	.348 .298	.373 .323	.342 .297	.299 .254
10-497640-25	20	.019	.213 .163	.238 .188	.207 .162	.164 .119
10-497640-45	20	.019	NS	NS	NS	NS
10-497640-65	20	.019	.138 .088	.163 .113	.132 .087	.089 .044
10-497596-15	20	.025	.058 .012	.083 .037	.052 .011	.009 NS
10-497596-25	20	.025	.148 .102	.173 .127	.142 .101	.099 .058
10-497596-35	20	.025	.229 .183	.254 .208	.223 .182	.180 .139
10-497596-55	20	.025	.346 .300	.371 .325	.340 .299	.297 .256
10-497695-15	16	.040	.255 .205	.280 .230	.249 .204	.206 .161
10-497630-25	16	.062	.348 .298	.373 .323	.342 .297	.299 .254
10-497630-35	16	.062	.060 .010	.085 .035	.054 .009	.011 NS
10-497630-45	16	.062	.108 .062	.133 .087	.102 .061	.059 .018
10-597502-15	12	.081	.228 .178	.252 .203	.222 .177	.179 .134
Wire Wrap Contacts		Tail Square				
10-407572-15	22D	.025	.014 NS	.498 .007	.008 NS	NS NS
10-407572-35	22D	.025	.155 .105	.180 .130	.149 .104	.106 .061
10-407572-45	22D	.025	.255 .205	.280 .230	.249 .204	.206 .161
10-407572-75	22D	.025	.521 .475	.546 .500	.515 .474	.472 .431
10-407584-25	20	.025	.605 .559	.630 .584	.599 .558	.556 .515
10-407584-35	20	.025	.308 .262	.333 .287	.302 .261	.259 .218

PCB Socket and pin part numbers include finish designation - gold plating over suitable underplate in accordance with MIL-C-39029. For other finish variations, consult Amphenol, Sidney, NY.
Note: 22M and 22D contacts are interchangeable.
For other contact options available for use in Tri-Start connectors (thermocouple, fiber optic), consult Amphenol, Sidney, NY.

Tri-Start
application tools

The following data includes information pertaining to the application tools which have been established for crimping, inserting, and removing contacts incorporated in the TV, CTV and MIL-DTL-38999 Series III connectors. For additional information on coax, twinax and triax contact tools see catalog 12-130.

All crimping tools included are the "full cycling" type and when used as specified in the installation instructions (L-624 and L-844) covering the TV, CTV and MS series connectors, will provide reliable crimped wire to contact terminations. There is a possibility of additional crimping tools other than those included being available at present or in the future for this specific application.

CRIMPING TOOLS

Contact Size/Type	Crimping Tool	Turret Die or Positioner
12 Pin and Socket	M22520/1-01	M22520/1-04
16 Pin and Socket	M22520/1-01 M22520/7-01	M22520/1-04 M22520/7-04
20 Pin and Socket	M22520/1-01 M22520/2-01 M22520/7-01	M22520/1-04 M22520/2-10 M22520/7-08
22D Pin	M22520/2-01 M22520/7-01	M22520/2-09 M22520/7-07
22D Socket	M22520/2-01 M22520/7-01	M22520/2-07 M22520/7-05
8 Twinax Center Pin and Socket	M22520/2-01	M22520/2-37
8 Twinax Intermediate Outer Pin & Socket	M22520/5-01	M22520/5-200

Where 2 or 3 tools are listed for a contact size, only one tool and its die or positioner are required to crimp the contact.
The above crimping tools and positioners are available from the approved tool manufacturer.

Contact Size/Type	Crimping Tool	Turret Die or Positioner
8 Coaxial Inner Pin and Socket	M22520/2-01	M22520/2-31
8 Coaxial Outer Pin and Socket	M22520/5-01	M22520/5-05 Die Closure B
	M22520/5-01	M22520/5-41 Die Closure B
	M22520/10-01	M22520/10-07 Die Closure B
16 Coaxial Inner Pin and Socket	M22520/2-01	M22520/2-35
16 Coaxial Outer Pin and Socket	M22520/4-01	M22520/4-02
12 Coaxial Inner Pin and Socket	M22520/2-01	M22520/2-34
12 Coaxial Outer Pin and Socket	M22520/31-01	M22520/31-02
10 (Power)	TP201423	1716P-1

INSERTION TOOLS

Use with Contact Size	Plastic Tools		Metal Tools			
			Angle Type		Straight Type	
	MS Part Number	Color	MS Part Number	Proprietary Part Number	Proprietary Part Number	Color
10 (Power	M81969/14-05*	Gray / (White)	M81969/8-11	†	†	Green
12	M81969/14-04*	Yellow / (White)	M81969/8-09	11-8674-12	11-8794-12	Yellow
16	M81969/14-03*	Blue / (White)	M81969/8-07	11-8674-16	11-8794-16	Blue
20	M81969/14-10*	Red / (Orange)	M81969/8-05	11-8674-20	11-8794-20	Red
22D	M81969/14-01*	Green / (White)	M81969/8-01	11-8674-24	11-8794-24	Black
8 Coaxial	None Required					
8 Twinax	None		M81969/46-06**	None		Red

REMOVAL TOOLS

Use with Contact Size	Plastic Tools		Metal Tools				
			For Unwired Contacts	Angle Type		Straight Type	
	MS Part Number	Color	Proprietary Part Number	MS Part Number	Proprietary Part Number	Proprietary Part Number	Color
10 (Power)	M81969/14-05*	(Gray) / White	†	M81969/8-12	†	†	Green / White
12	M81969/14-04*	(Yellow) / White	11-10050-11	M81969/8-10	11-8675-12	11-8795-12	Yellow / White
16	M81969/14-03*	(Blue) / White	11-10050-10	M81969/8-08	11-8675-16	11-8795-16	Blue / White
20	M81969/14-10*	(Orange) / Red	11-10050-9	M81969/8-06	11-8675-20	11-8795-20	Red / Orange
22D	M81969/14-01*	(Green) / White	11-10050-7	M81969/8-02	11-8675-24	11-8795-24	Green / White
8 Coaxial	M81969/14-12	Green	None	None	11-9170	DRK264-8††	N/A
8 Twinax	M81969/14-12	Green	None	M81969/46-12**	11-9170	N/A	N/A

The M81969/8, 11-8674, 11-8675, and 11-8794 metal contact insertion and removal tools will accommodate wires having the maximum outside diameter as follows: Contact size 12: dia. is .155, size 16: dia. is .109, size 20: dia. is .077, size 22D: dia. is .050. When wire diameters exceed those specified, the plastic tools must be used.

* Double end insertion/removal tool.
** Twinax insertion tools are available only in a straight type, metal version.

† To be determined.
†† Contact Daniels Manufacturing Co. for availability.

Tri-Start

how to order – (Amphenol® TV, metal)
how to order – (Amphenol® TV26 CLUTCH-LOK®)

Proprietary Part Number

Amphenol® Tri-Start Connectors (metal) can be ordered by coded part number.
Ordering procedure is illustrated by part number TVPS00RF-9-35PB( ) as shown below:

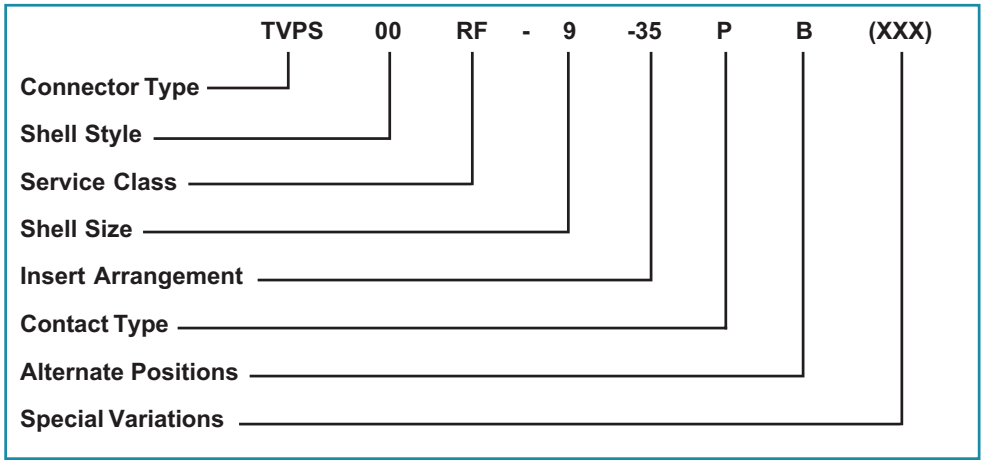

Connector Type

TV designates Tri-Start Series Connector
TVP designates back panel mounted receptacle
TVS designates 200°C rated
TVPS designates back panel mounted, 200°C rated receptacle
MTV designates CLUTCH-LOK connector with "MS" stamping (Note: remove dashes in how to order part number when ordering CLUTCH-LOK)

Shell Style

00 designates wall mount receptacle
01 designates line receptacle
02 designates box mount receptacle
06 designates straight plug
26 designates proprietary CLUTCH-LOK high vibration straight plug (available in service classes RK and RS only)
07 designates jam nut receptacle
09 designates flange mounted plug
IY designates solder mounted receptacle, hermetic only
HIY designates weld mounted receptacle, hermetic only

Service Class

RX alternate finish, requires special variation suffix. Example: non-conductive, anodic coated aluminum is defined by variation suffix 005. Consult Amphenol, Sidney NY for details, options and availability of non-cadmium or nickel finishes.

RF electroless nickel plated aluminum, optimum EMI shielding effectiveness –65dB @ 10GHz specification min., 48 hour salt spray, 200°C

RGF** electroless nickel plated ground plane aluminum, 200°C

RGW** olive drab cadmium plated ground plane aluminum, 175°C

RK* corrosion resistant stainless steel, firewall capability, plus 500 hour salt spray resistance, EMI –45 dB @ GHz specification min., 200°C

RW corrosion resistant olive drab cadmium plate aluminum, 500 hour extended salt spray, EMI –50 dB @ 10 GHz specification min., 175°C

RQF same as RF except with Quadrax contacts

RGQF same as RGF except with Quadrax contacts

RGQW same as RGW except with Quadrax contacts

RQK same as RK except with Quadrax contacts and not firewall capable

RQW same as RW except with Quadrax contacts

Y hermetic seal, passivated stainless steel, 200°C

RS* (non-hermetic connectors), nickel plated stainless steel, optimum EMI shielding effectiveness –65dB @ 10 GHz specification min., 500 hour salt spray, 200°C, firewall barrier

YN (hermetic connectors), nickel plated stainless steel, 200°C

Shell Size

MIL-DTL-38999, Sizes 9-25.

A	B	C	D	E	F	G	H	J	MIL Shell Size
9	11	13	15	17	19	21	23	25	Amphenol Shell Size

Insert Arrangement

MIL-DTL-38999, see insert arrangement charts, pgs. 6 & 7.

Contact Type

P designates pin contacts
S designates socket contacts

Alternate Positions

Locksmith keying - rotation of minor keys. See page 8.
"N" not required for normal position.

Special Variations

Consult Amphenol Aerospace, Sidney, NY for variations.

* Coaxial arrangements are not available in these classes.
** For more information on Coax/Triax/Twinax Ground Plane Connectors see page 49.

Tri-Start

how to order – (D38999, TV military, metal)
how to order – (MTV26 CLUTCH-LOK®)

Military Part Number

To more easily illustrate ordering procedure of Tri-Start Connectors (metal) by military designation, part number D38999/20F A35PB is shown as follows:

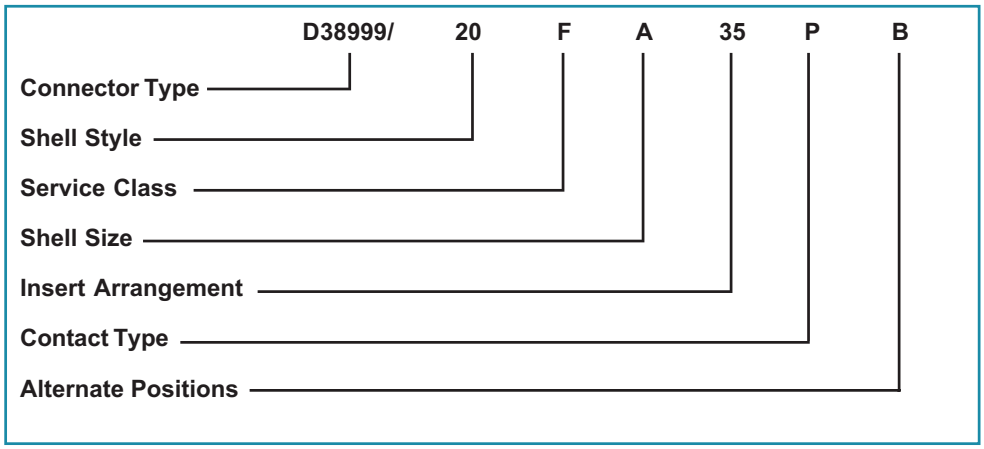

Connector Type

D38999/ designates MIL-DTL-38999 Series III Connector
MTV designates military D38999/26 CLUTCH-LOK high vibration straight plug (available in service class RK only)

Shell Style

20 designates wall mount receptacle
21 designates box mount receptacle, hermetic
23 designates jam nut receptacle, hermetic
24 designates jam nut receptacle
25 designates solder mount receptacle, hermetic
26 designates straight plug
27 designates weld mount receptacle, hermetic

Lanyard Release Connectors (See pages 28-32 for ordering)
29 designates lanyard release plug with pin contacts
30 designates lanyard release plug with socket contacts
31 designates lanyard release plug for MIL-STD-1760 with pin contacts

Protection Caps (See page 40 for ordering MS protection caps)
32 designates plug protection cap
33 designates receptacle protection cap

Service Class

C non-conductive, anodic coated aluminum, 500 hour salt spray, 200°C

F electroless nickel plated aluminum, optimum EMI shielding effectiveness –65dB @ 10GHz specification min., 48 hour salt spray, 200°C

G space grade, electroless nickel, 48 hour salt spray, 200°C

K corrosion resistant stainless steel, firewall capability, plus 500 hour salt spray resistance, EMI –45 dB @ GHz specification min., 200°C

L corrosion resistant steel, electrodeposited nickel, 48 hour salt spray, 200°C

W corrosion resistant olive drab cadmium plate aluminum, 500 hour extended salt spray, EMI –50 dB @ 10 GHz specification min., 175°C

Y hermetic seal, passivated stainless steel, 200°C

S (non-hermetic connectors), nickel plated stainless steel, optimum EMI shielding effectiveness –65dB @ 10 GHz specification min., 500 hour salt spray, 200°C

N (hermetic connectors), nickel plated stainless steel, 200°C

Shell Size

MIL-DTL-38999, Sizes 9-25.

A	B	C	D	E	F	G	H	J	MIL Shell Size
9	11	13	15	17	19	21	23	25	Amphenol Shell Size

Insert Arrangement

MIL-DTL-38999, see insert arrangement charts, pgs. 6 & 7.

Contact Type

P designates pin contacts
S designates socket contacts
A designates same as “P” except supplied less pin contacts
B designates same as “S” except supplied less socket contacts (A & B designates non-standard contact applications)
X designates eyelet contacts, hermetics only

Alternate Positions

Locksmith keying - rotation of minor keys. See page 8. Use N for normal.

Special Variations

Consult Amphenol Aerospace, Sidney, NY for variations.

Tri-Start
how to order – (Amphenol® CTV, composite)

Proprietary Part Number

Amphenol® Tri-Start Composite Connectors can be ordered by coded part number. Ordering procedure is illustrated by part number CTVPS00RF-9-35PB as shown below:

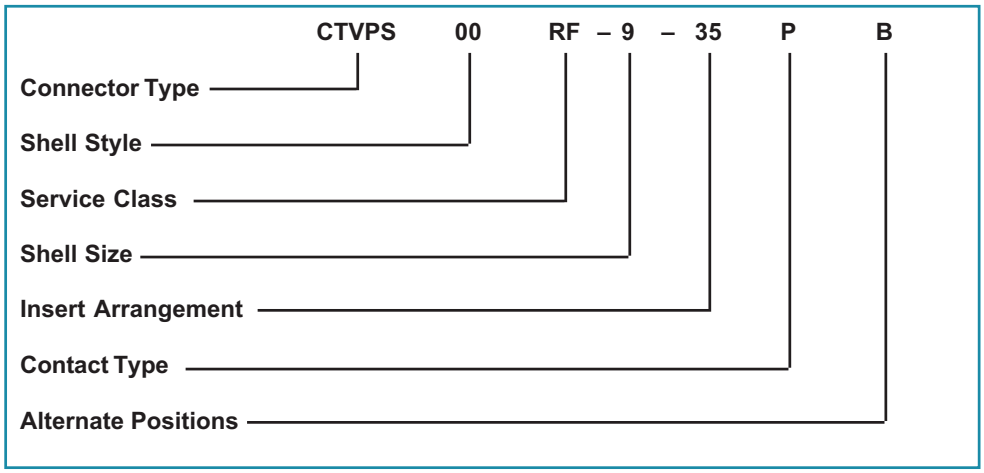

Connector Type

CTV designates Tri-Start Series Connector
CTVP designates panel mounted receptacle
CTVS designates 200°C rated
CTVPS designates panel mounted, 200°C rated receptacle

Shell Style

00 designates wall mount receptacle
01 designates line receptacle
02 designates box mount receptacle*
06 designates straight plug
07 designates jam nut receptacle

Service Class

RF electroless nickel plated composite, 200°C, 2000 hour salt spray
RW olive drab cadmium plated composite, 175°C
RGF** electroless nickel plated ground plane composite, 200°C
RGW** olive drab cadmium plated ground plane composite, 175°C
RQF same as RF composite except with Quadrax contacts
RQW same as RW composite except with Quadrax contacts
RGQF same as RGF composite except with Quadrax contacts
RGQW same as RGW composite except with Quadrax contacts

* Consult Amphenol Aerospace, Sidney, NY for availability.
** For more information on Coax/Triax/Twinax Ground Plane Connectors see page 49.

Shell Size

9 thru 25 available

Insert Arrangement

MIL-DTL-38999, see insert arrangement charts, pgs. 6 &7.

Contact Type

H designates 1500 cycle pin contacts
J designates 1500 cycle socket contacts
P designates 500 cycle pin contacts
S designates 500 cycle socket contacts

Alternate Positions

Locksmith keying - rotation of minor keys. “N” not required for normal position, see page 8.

Amphenol® Federal Vendor Identification/FSCM 77820

Tri-Start
how to order – (D38999, CTV military, composite)

Military Part Number

To more easily illustrate ordering procedure of Tri-Start Composite Connectors by military designation, part number D38999/20JG35PN is shown as follows:

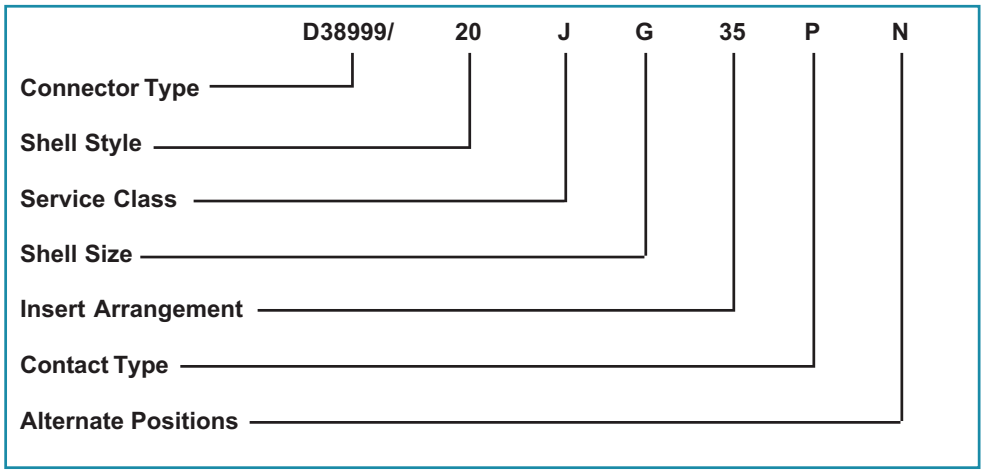

Connector Type

D38999/ designates MIL-DTL-38999 Series III Connector

Shell Style

20 designates wall mount receptacle
24 designates jam nut receptacle
26 designates straight plug
(Consult Amphenol Aerospace for availability of composite box mount receptacles)

Service Class

J olive drab cadmium plate (175°C), 2000 hrs. dynamic salt spray
M electroless nickel plate (200°C), 2000 hrs. dynamic salt spray

Shell Size

MIL-DTL-38999, Sizes 9-25

A	B	C	D	E	F	G	H	J	MIL Shell Size
9	11	13	15	17	19	21	23	25	Amphenol Shell Size

Insert Arrangement

MIL-DTL-38999, see insert arrangement charts, pg. 6 & 7.

Contact Type

H designates 1500 cycle pin contacts
J designates 1500 cycle socket contacts
P designates 500 cycle pin contacts
S designates 500 cycle socket contacts
A designates same as “P” except supplied less pin contacts
B designates same as “S” except supplied less socket contacts
(A & B designate non-standard contact applications)

Alternate Positions

Locksmith keying - rotation of minor keys. See page 8.
(Use N for normal)

Tri-Start
weight comparisons (composite vs. metal)

Depending on the shell style, shell size and contact count, weight savings can range from 17% to 40% compared to standard aluminum product.

Tri-Start Weight in ounces (includes contacts)

Size/ Arrange-ment	Wall Mount Receptacle (00)						Jam Nut Receptacle (07)						Plug (06)					
	Stainless Steel		Aluminum		Composite		Stainless Steel		Aluminum		Composite		Stainless Steel		Aluminum		Composite	
	Pin	Socket	Pin	Socket	Pin	Socket	Pin	Socket	Pin	Socket	Pin	Socket	Pin	Socket	Pin	Socket	Pin	Socket
9-35	.7216	.7840	.3248	.3777	.2588	.3121	1.1472	1.2096	.4416	.5040	.3489	.4413	1.0736	1.1360	.4236	.4625	.2606	.2994
9-98	.7216	.7776	.2496	.3056	.1664	.2224	1.1472	1.2032	.4416	.4976	.3744	.4640	1.0736	1.1296	.3968	.4624	.2991	.2337
11-35	.9488	1.0800	.3632	.4960	.2753	.4081	1.4304	1.5632	.5936	.7264	.4679	.6007	1.2480	1.3808	.5312	.6389	.3450	.4582
11-98	.9488	1.0620	.3632	.4768	.2753	.3889	1.4304	1.5440	.5936	.7072	.4679	.5815	1.2480	1.3616	.5330	.6283	.3468	.4457
13-8	1.2096	1.3888	.4800	.6592	.3696	.5488	1.9104	2.0896	.7664	.9456	.6560	.8352	1.8048	1.9840	.7936	.9728	.5237	.5952
13-35	1.2160	1.4320	.4864	.7024	.3762	.5922	1.9168	2.1328	.7728	.9888	.6136	.8296	1.8112	2.0272	.8000	.8472	.5301	.6531
13-98	1.2160	1.4016	.4864	.6720	.3762	.5618	1.9168	2.1024	.7728	.9584	.6136	.7992	1.8112	1.9968	.7978	.9856	.5244	.7157
15-5	1.5312	1.7904	.6352	.8944	.5027	.7619	2.3792	2.6384	.9728	1.2320	.7749	1.0341	2.2704	2.5456	.9632	1.1719	.6450	.8467
15-18	1.5456	1.8416	.7760	.9456	.6432	.8128	2.3936	2.6896	.9872	1.2832	.8544	1.1504	2.2848	2.5808	.9776	1.2736	.6594	.8208
15-35	1.5424	1.8768	.6464	.9808	.5139	.8483	2.3904	2.7344	.9840	1.3280	.7861	1.1301	2.2816	2.6256	1.2179	1.3184	.8961	1.0002
17-6	2.1488	2.5904	.9360	1.3776	.7812	1.2228	2.9152	3.3568	1.2336	1.6752	.9940	1.4356	2.5008	3.1024	1.1408	1.7424	.8160	1.4176
17-26	2.1344	2.5600	.9216	1.3472	.7668	1.1924	2.9008	3.3264	1.2192	1.6448	.9796	1.4052	2.4864	2.9120	1.1264	1.3343	.8017	.8062
17-35	2.1360	2.6640	.9232	1.4512	.7684	1.2964	2.9024	3.4304	1.2208	1.7488	.9812	1.5092	2.4880	3.0160	1.1280	1.5497	.8033	1.2144
19-11	2.2592	2.6656	.9696	1.4528	.7925	1.2757	3.4352	3.9184	1.4720	1.9552	1.2033	1.6865	2.9808	3.4640	1.3472	1.8304	.9632	1.4464
19-32	2.1888	2.7264	.9760	1.5136	.7989	1.3365	3.4416	3.9792	1.4784	2.0160	1.2097	1.7473	2.9872	3.5248	1.3536	1.8912	.9696	1.5072
19-35	2.1920	2.8432	.9792	1.6304	.8021	1.4533	3.4448	4.0960	1.4816	2.1328	1.2129	1.8641	2.9904	3.6416	1.3568	2.0080	.9728	1.6240
21-11	2.7456	3.4640	1.3088	2.0272	1.1088	1.8272	3.9712	4.6896	1.8128	2.5312	1.6128	2.3312	3.4448	4.1632	1.7344	2.5312	1.3039	1.8710
21-16	2.6784	3.3168	1.2416	1.8800	1.0422	1.6806	3.9040	4.5424	1.7456	2.3840	1.4505	2.0889	3.3776	4.0160	1.6672	2.3168	1.2352	1.8736
21-35	2.6672	3.4992	1.2304	2.0624	1.0310	1.8630	3.8928	4.7248	1.7344	2.5664	1.4393	2.2713	3.3664	4.1984	1.6560	2.2309	1.2255	1.8003
21-41	2.6768	3.3600	1.2400	1.9232	1.0406	1.7238	3.9024	4.5856	1.7440	2.4272	1.4489	2.1321	3.3760	3.5792	1.6656	1.8688	1.2336	1.4368
23-21	3.0352	3.8624	1.4496	2.2768	1.2279	2.0551	4.2368	5.0640	1.9440	2.7712	1.6368	2.4640	3.7920	4.6192	1.9216	2.7488	1.4637	2.2896
23-35	3.0240	4.0448	1.4384	2.4592	1.2167	2.2375	4.2256	5.2464	1.9328	2.9536	1.6256	2.6464	3.7808	4.8016	1.9104	2.6087	1.4525	2.1507
23-53	2.8992	3.9072	1.4560	2.4816	1.2343	2.2599	4.2432	5.1088	1.9504	2.8160	1.6432	2.5088	3.7984	4.6640	1.9280	2.7936	1.4672	2.2384
25-4	3.4512	4.4800	1.7312	2.8816	1.4864	2.1904	4.8048	5.8272	2.2016	3.2480	1.9568	2.8720	4.2224	5.2496	2.2128	3.2560	1.7133	2.4163
25-19	3.5312	4.7264	1.8112	3.0064	1.5664	2.7616	4.8848	6.0816	2.2816	3.4784	2.0368	3.2336	4.3024	5.4992	2.2928	3.4896	1.7933	2.7058
25-20	3.8190	4.7150	2.0173	3.1125	1.7733	2.8512	5.1430	6.0380	2.4877	3.5421	2.1872	3.2416	4.4350	5.3300	2.2580	3.0182	1.8288	2.8928
25-35	3.4416	4.6656	1.7216	2.9456	1.4776	2.7016	4.7952	6.0192	2.1920	3.4160	1.8915	3.1155	4.2128	5.4368	2.2032	3.4272	1.7037	2.9277
25-61	3.4304	4.4848	1.7282	2.7648	1.4841	2.5208	4.7840	5.8384	2.1808	3.2352	1.8803	2.9347	4.2016	5.2560	2.1920	3.2464	1.6912	2.7456

All weight measurements are for reference only.

Tri-Start – specials
fiber optics, filter protection, PCB applications

Multi-Channel
Fiber Optic Connectors

FIBER OPTIC
Amphenol multi-channel fiber optic connectors offer a precision optic interconnect system within the high performance MIL-DTL-38999 Series III connector. The metal-to-metal feature of the Tri-Start connector provides protection from damage in severe environmental and physical conditions. Optical performance is optimized utilizing the ceramic alignment features employed by the termini. Insertion losses are typically .8dB and can range from .5 to 1.5 dB, depending on test conditions.

Ask for publication 12-352 for complete information on Fiber Optic Connectors.

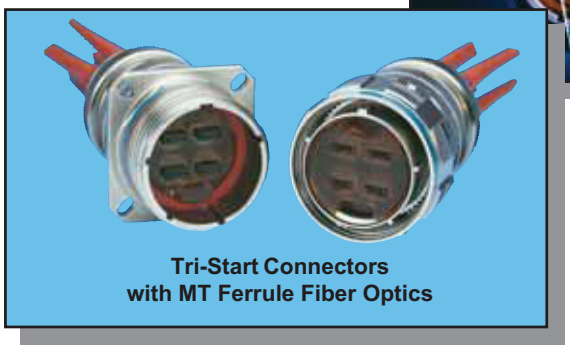

Tri-Start Connectors
with MT Ferrule Fiber Optics

TRANSIENT PROTECTION
EMI/EMP protection devices can be integrated into the MIL-DTL-38999 Series III connector to provide a cost effective alternative to discrete devices mounted inside the box. These unique, high performance designs provide weight and space savings necessary for modern electronic systems.

Ask for publication 12-120 for complete information on Amphenol Filter/Transient Protection Connectors.

Filter/Transient Protection Connectors

FLEX TERMINATION ASSEMBLIES FOR PRINTED CIRCUIT BOARD APPLICATIONS
Amphenol provides flex termination assemblies for printed circuit board attachment through Amphenol ACT, Advanced Circuit Technology. Flex circuits are available for MIL-DLT-38999 connectors in flat or sculptured styles. Sculptured® Flexible Circuits with built-in terminations eliminate the failures associated with crimped or solder-on contacts, and they are designed to geometrically fit the tight space requirements within a unit. They plug into a printed circuit board and create a self-locking terminal pad which eliminates the need for an additional interconnect to the PCB.

Flex Termination Assemblies

TRI-START CONNECTORS WITH PC TAIL CONTACTS
Printed circuit tail twinax contacts are currently supplied in 8, 12 and 16 coax type, 8, 10 and 12 twinax type, and 8 triax socket type. These provide a cost effective packaging solution for limited space applications where connectors are attached to printed circuit boards.

Ask for catalog 12-170, Amphenol Cylindrical Connectors for PCB Applications and catalog 12-130, Amphenol High Frequency Contacts for Multi-pin Connectors.

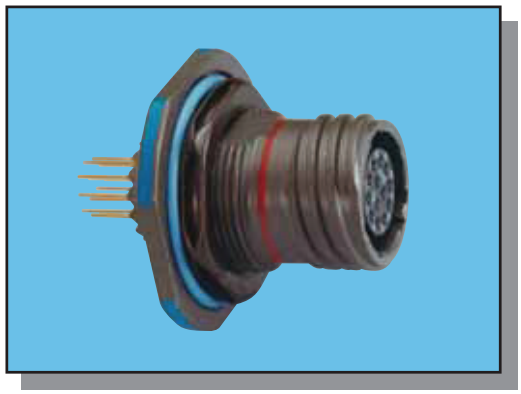

PC Tail Contacts

Tri-Start – specials

coax, twinax and triax contacts, ground plane connectors, press fit connectors

Amphenol MIL-DTL-38999 Series III connectors are the most commonly used connectors for incorporation of shielded contacts along with traditional crimp contacts and also with contacts for data bus, LAN and coax/triax/twinax transmission lines with conductive inserts that ground the outer conductor of the coax, triax, twinax contact to the shell. These connectors are sold “less contacts”. They will accommodate size 8 coax, triax or twinax contacts or size 12 and 16 coax contacts.

The insert availability chart on pages 6 and 7 indicates the patterns that are available in a ground plane version, (see those designated with a star symbol), and consult how to order pages for ordering procedures.

Concentric Twinax Contacts Qualified to M39029/90 and /91

CONNECTORS WITH SHIELDED COAX CONTACTS

For shielded wire applications, coaxial contacts can be incorporated into MIL-DTL-38999 connectors. Designed-in crimp or solder types are available to fit various RG and special cables. High performance coaxial contacts eliminate discontinuities or impedance variations due to movement of parts under axial load.

Shielded Coax Contacts

CONNECTORS WITH CONCENTRIC TWINAX CONTACTS

The size 8 concentric twinax contact was developed for use in MIL-STD-1553 Airborne multiplex data bus applications which require high performance interconnect characteristics in multi-pin connectors. Ideal for this application need is the high performance Tri-Start connector with its fully scoop-proof feature of recessed pins. The concentric twinax contact is crimp terminable to twisted-shielded cable.

38999 Series III Connector with Twinax Contacts and Standard Contacts

Ground Plane Connector with Twinax Contacts and Insulated Power/Signal Contacts

SHIELDED TRIAX CONTACTS

Triax contacts have three conductors and are offered in sizes 8, 10 and 12. They provide additional shielding when terminated to triax cable having solid or stranded center conductors. Each of the three conductors of the triax contact is separated by dielectric insulation to isolate ground planes and to improve shielding effectiveness.

High speed data transmission quadrax contacts are now available for use in MIL-DTL-38999 connectors.

MIL-DTL-38999 Series III Connectors with Compliant Pin Contacts for Solderless Mounting on Printed Circuit Boards

PRESS FIT CONNECTORS

Tri-Start connectors are also designed for the application of solderless mounting to printed circuit boards. The Press Fit connector performances are compatible with Series III

Consult the following Amphenol literature for further information:
Product Data Sheet 139 for Ground Plane Connectors.
Product Data Sheet 188 for Press Fit Connectors.
Catalog 12-130 for High Frequency Contacts for Multi-pin Connectors.

Tri-Start – specials
quadrax and differential twinax contacts

SIZE 8 HIGH SPEED QUADRAX AND DIFFERENTIAL TWINAX CONTACTS FOR USE IN MIL-DTL-38999 CONNECTORS

Quadrax Contacts consist of an outer contact with four strategically spaced inner contacts forming two 100 or 150 Ohm matched impedance differential pairs.

Differential Twinax Contacts consist of an outer contact with two inner contacts spaced to form one 100 or 150 Ohm matched impedance differential pair.

Both contacts can be used in connectors for Ethernet 100 Base-T-100 Ohm, Fibre-Channel-150 Ohm and IEEE 1394B FireWire-110 Ohm applications.

TYPICAL ELECTRICAL PERFORMANCE

- Bandwidth: Up to 3 Gigahertz
- Data rate: Exceeding 2 Gbits/sec.
- Voltage rating: 500 Vrms max. @ sea level
- Dielectric withstanding voltage:
  1000 VACrms between all inner contacts @ sea level
  500 VACrms between inner and outer contacts @ sea level

D38999 Series III Groundplane Connector with Quadrax PCB Sockets Installed
Contacts front are Differential Twinax (left) and Quadrax (right)

Quadrax contacts are also available in ARINC 600 Rectangular connectors. See photo on right; consult Amphenol Aerospace for further information.

Also available are Quadrax and Twinax Transition Adapters which provide a method of launching from the high speed connectors to PCB boards.

Consult Amphenol Aerospace, Sidney NY for ordering information for MIL-DTL-38999 Series III connectors with quadrax and differential twinax contacts. Below is a chart that provides contact part numbers available, but not limited to, the cables listed. All contacts are available kitted with or installed into specially modified MIL-DTL-38999 connectors. Consult Amphenol for cables not listed.

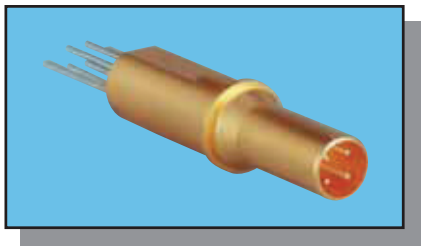

Quadrax Contact for use in ARINC 600 Connectors

CONTACT PART NUMBERS AND APPLICABLE CABLES FOR USE IN D38999 CONNECTORS

Description	Part Number	Cable Part Number	Impedance
Quadrax Socket	21-33385-21	Draka Fileca F-4703-3	100 Ohm
	21-33385-31	Tensolite 26473/02006X-4(LD)	150 Ohm
	21-33385-51	Tensolite NF24Q100	100 Ohm
	21-33385-61	Tensolite NF22Q100 or Thermax 956-5	100 Ohm
	21-33385-61	Tensolite 24450/03089X-4(LD)	110 Ohm
	21-33385-71	Tensolite NF26Q100	100 Ohm
	21-33385-91	JSFY02	110 Ohm
	21-33397-21	PCB (1.035 length)	100 Ohm
	21-33397-31	PCB (.866 length	100 Ohm
Quadrax Pin	21-33384-21	Draka Fileca F-4703-3	100 Ohm
	21-33384-31	Tensolite 26473/02006X-4(LD)	150 Ohm
	21-33384-51	Tensolite NF24Q100	100 Ohm
	21-33384-61	Tensolite NF22Q100 or Thermax 956-5	100 Ohm
	21-33384-61	Tensolite 24450/03089X-4(LD)	110 Ohm
	21-33384-71	Tensolite NF26Q100	100 Ohm
	21-33384-91	JSFY02	110 Ohm
	21-33398-21	PCB (1.035 length)	100 Ohm
	21-33398-31	PCB (.866 length)	100 Ohm
	21-33425-1	Right Angle Special	100 Ohm
Differential Twinax Socket	21-33388-21	Tensolite 24463/9P025X-2(LD)	100 Ohm
	21-33388-31	Tensolite 26483/03071X-2(LD)	100 Ohm
	21-33835-1	PCB (1.035 length)	
Differential Twinax Pin	21-33387-21	Tensolite 24463/9P025X-2(LD)	100 Ohm
	21-33387-31	Tensolite 26483/03071X-2(LD)	100 Ohm
	21-33834-1	PCB (1.035 length)	

Tri-Start – specials

deep reach and stand-off shells, connectors with integral strain reliefs, ESD protection, RJ Field

OTHER SPECIALS WITHIN THE TRI-START FAMILY OF CONNECTORS:

- **Deep Reach Shells** – for increased panel thicknesses.
- **Stand-off Flange Shells –** for attachment to printed circuit boards
- **Connectors with Integral Strain Reliefs –** cost savings through integration of strain relef to the shell.
- **Electrostatic Discharge (ESD) Protection –** Amphenol has developed a design feature for the Tri-Start connector which will protect sensitive components from Electrostatic Discharge without diodes, varistors, gas tubes, or "experimental" semiconductive materials. These connectors utilize the Faraday Cage principal to shunt electrostatic discharge events to the conductive enclosure on which the connector is mounted, thus never allowing the high voltage, high current discharge event to reside on any contacts. The ESD protected connectors have the same physical envelope as their standard counterparts, and do not require special mounting or terminating techniques. All of the contacts remain fully functional, and electrical characteristics such as capacitance are not effected. For more information on ESD protected connectors, ask for Product Data Sheet 171. Also publication L-2075, "ESD Attenuation Test Procedure for Connectors with Faraday Cage Protective Structures" is available as a reference document.

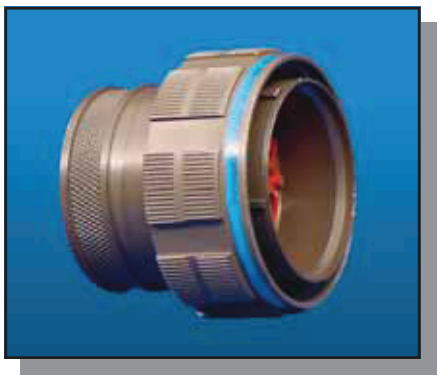

Tri-Start with Integral Strain Relief

Electrostatic Discharge (ESD) Testing on Tri-Start Filter Connector

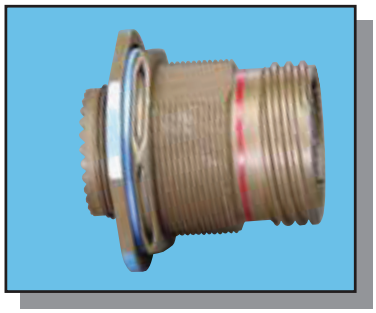

Tri-Start Jam Nut Receptacle with Deep Reach Shell

Tri-Start with Stand-off Flange

RJ FIELD CONNECTORS

Amphenol Socapex offers the RJF TV within the MIL-DTL-38999 connector shell for Ethernet connection. The RJ Field is designed for use where it is necessary to go beyond the protected office environment of most Ethernet applications, to the harsher environments of industrial and even mil-aero applications. Allows use of Ethernet Class D/Cat. 5e connection for 10 BaseT, 100 BaseTX, or 1000 Base T networks.
Consult Amphenol Socapex for further information.

RJF TV Connectors for Ethernet Connection

Компания «ЭлектроПласт» предлагает заключение долгосрочных отношений при поставках импортных электронных компонентов на взаимовыгодных условиях!

Наши преимущества:

- Оперативные поставки широкого спектра электронных компонентов отечественного и импортного производства напрямую от производителей и с крупнейших мировых складов;
- Поставка более 17-ти миллионов наименований электронных компонентов;
- Поставка сложных, дефицитных, либо снятых с производства позиций;
- Оперативные сроки поставки под заказ (от 5 рабочих дней);
- Экспресс доставка в любую точку России;
- Техническая поддержка проекта, помощь в подборе аналогов, поставка прототипов;
- Система менеджмента качества сертифицирована по Международному стандарту ISO 9001;
- Лицензия ФСБ на осуществление работ с использованием сведений, составляющих государственную тайну;
- Поставка специализированных компонентов (Xilinx, Altera, Analog Devices, Intersil, Interpoint, Microsemi, Aeroflex, Peregrine, Syfer, Eurofarad, Texas Instrument, Miteq, Cobham, E2V, MA-COM, Hittite, Mini-Circuits,General Dynamics и др.);

Помимо этого, одним из направлений компании «ЭлектроПласт» является направление «Источники питания». Мы предлагаем Вам помощь Конструкторского отдела:

- Подбор оптимального решения, техническое обоснование при выборе компонента;
- Подбор аналогов;
- Консультации по применению компонента;
- Поставка образцов и прототипов;
- Техническая поддержка проекта;
- Защита от снятия компонента с производства.

Как с нами связаться

Телефон: 8 (812) 309 58 32 (многоканальный)
Факс: 8 (812) 320-02-42
Электронная почта: org@eplast1.ru
Адрес: 198099, г. Санкт-Петербург, ул. Калинина, дом 2, корпус 4, литера А.