CY8C21312
CY8C21512

Automotive Extended PSoC® Programmable System-on-Chip™

Features

- Automotive Electronics Council (AEC) Q100 qualified
- Powerful Harvard-architecture processor
  - M8C processor speeds up to 12 MHz
  - Low power at high speed
  - Operating voltage: 4.75 V to 5.25 V or 3 V to 3.6 V
  - Automotive temperature range: –40 °C to +125 °C
- Advanced peripherals
  - One CapSense® block:
    - Provides configurable capacitive sensing elements
    - Supports combination of CapSense buttons, sliders, touchpads, and proximity sensors
  - One limited digital PSoC® block provides:
    - 8-bit timer, counter, or pulse-width modulator (PWM)
    - Half-duplex UART
    - SPI slave
    - Connectable to all general purpose I/O (GPIO) pins
- Flexible on-chip memory
  - 8 KB flash program storage
  - 512 bytes SRAM data storage
  - In-system serial programming (ISSP)
  - Partial flash updates
  - Flexible protection modes
  - EEPROM emulation in flash
- Complete development tools
  - Free development software (PSoC Designer™)
  - Full-featured in-circuit emulator (ICE) and programmer
  - Full-speed emulation
  - Complex breakpoint structure
  - 128 KB trace memory
- Precision, programmable clocking
  - Internal 24 MHz oscillator
  - Internal low-speed, low-power oscillator for Watchdog and Sleep functionality
  - Optional external oscillator, up to 24 MHz
- Programmable pin configurations
  - 25 mA sink, 10 mA drive on all GPIOs
  - Pull-up, pull-down, high Z, strong, or open drain drive modes on all GPIOs
  - Analog input on all GPIOs
  - Configurable interrupt on all GPIOs
- Versatile analog mux
  - Common internal analog bus
  - Simultaneous connection of I/O combinations
- Additional system resources
  - Inter-Integrated Circuit (I^2C™) master, slave, or multi-master operation up to 400 kHz
  - Watchdog and sleep timers
  - User-configurable low-voltage detection (LVD)
  - Integrated supervisory circuit
  - On-chip precision voltage reference

Logic Block Diagram

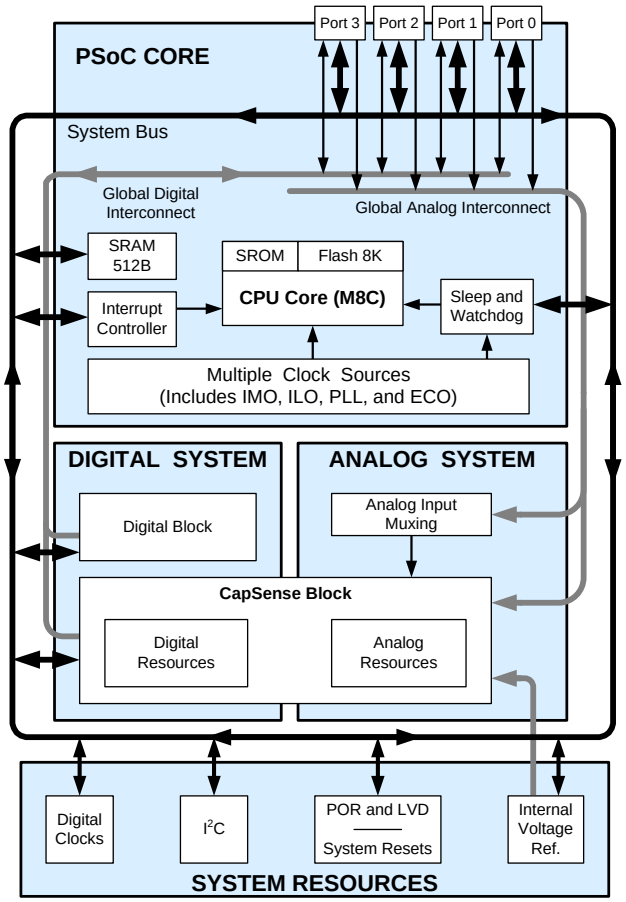

Contents

PSoC Functional Overview **3**
The PSoC Core 3
The Digital System 3
The Analog System 4
Additional System Resources 4
PSoC Device Characteristics 5
Getting Started **5**
Application Notes 5
Development Kits 5
Training 5
CYPros Consultants 5
Solutions Library 5
Technical Support 5
Development Tools **6**
PSoC Designer Software Subsystems 6
Designing with PSoC Designer **7**
Select Components 7
Configure Components 7
Organize and Connect 7
Generate, Verify, and Debug 7
Pinouts **8**
20-pin Part Pinout 8
28-pin Part Pinout 9
Registers **10**
Register Conventions 10
Register Mapping Tables 10
Absolute Maximum Ratings **13**
Operating Temperature **13**
Electrical Specifications **14**
DC Electrical Characteristics 15
AC Electrical Characteristics 18
Development Tool Selection **23**
Software 23
Development Kits 23
Evaluation Tools 23
Device Programmers 23
Accessories (Emulation and Programming) 24
Ordering Information **25**
Ordering Code Definitions 25
Packaging Information **26**
Packaging Dimensions 26
Tape and Reel Information 28
Thermal Impedances 30
Solder Reflow Specifications 30
Reference Information **31**
Reference Documents 31
Acronyms **32**
Document Conventions **32**
Units of Measure 32
Numeric Conventions **32**
Glossary **33**
Document History Page **37**
Sales, Solutions, and Legal Information **38**
Worldwide Sales and Design Support 38
Products 38
PSoC Solutions 38

PSoC Functional Overview

The PSoC family consists of many devices with on-chip controllers. These devices are designed to replace multiple traditional microcontroller unit (MCU)-based system components with one, low-cost single-chip programmable component. A PSoC device includes configurable blocks of analog and digital logic, and programmable interconnect. This architecture makes it possible for you to create customized peripheral configurations, to match the requirements of each individual application. Additionally, a fast CPU, flash program memory, SRAM data memory, and configurable I/O are included in a range of convenient pinouts.

The PSoC architecture, as illustrated in the Logic Block Diagram on page 1, comprises of four main areas: the core, the system resources, the digital system, and the analog system. Configurable global bus resources allow all the device resources to be combined into a complete custom system. Each CY8C21x12 device includes one limited digital block and one CapSense block. Depending on the PSoC package, up to 24 GPIOs are also included. The GPIOs provide access to the global digital and analog interconnects.

The PSoC Core

The PSoC core is a powerful engine that supports a rich instruction set. It encompasses SRAM for data storage, an interrupt controller, sleep, and watchdog timers, and an internal main oscillator (IMO) and internal low-speed oscillator (ILO). The CPU core, called the M8C, is a powerful processor with speeds up to 24 MHz. The M8C is a four-million instructions per second (MIPS) 8-bit Harvard-architecture microprocessor.

System Resources provide additional capability, such as digital clocks for increased flexibility, I^2C functionality for implementing an I^2C master, slave, or multi-master, an internal voltage reference that provides an absolute value of 1.3 V to a number of PSoC subsystems, and various system resets supported by the M8C.

The Digital System is composed of a programmable limited digital block and fixed-function digital resources inside the CapSense block. The limited digital block can be configured into a number of digital peripherals. The fixed-function digital resources in the CapSense block provide external modulation signals, measurement timing, and measurement conversion. The digital resources can be connected to the GPIO through a series of global buses that provide very flexible routing options.

The Analog System is composed of a comparator and a filter that are used in the CapSense block in order to implement capacitive sensing measurement.

The Digital System

The digital system is composed of one digital block. This block is an 8-bit resource that can implement various 8-bit digital peripherals. Digital peripheral configurations include those listed.

- PWM (8-bit)
- Counter (8-bit)
- Timer (8-bit)
- Half-duplex 8-bit UART with selectable parity
- SPI slave
- I^2C master, slave, or multi-master (implemented in a dedicated I^2C block)

The digital block can be connected to any GPIO through a series of global buses that can route any signal to any pin. The buses also allow for signal multiplexing and for performing logic operations. This configurability frees your designs from the constraints of a fixed peripheral controller.

Figure 1. Digital System Block Diagram

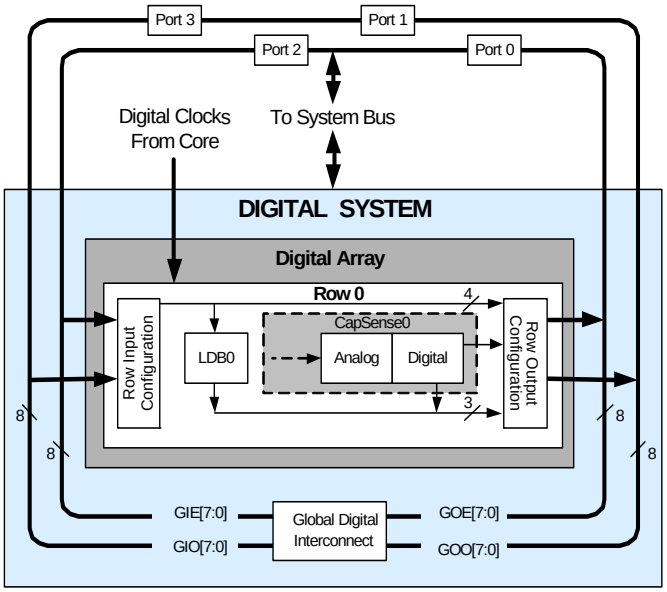

The Analog System

The analog system is composed of analog resources inside of the CapSense block. These resources are used to implement a flexible capacitive sensing and measurement module. The analog resources in the CapSense block are listed.

- Comparator used in capacitance-to-digital conversion
- Fixed, absolute reference or adjustable, ratiometric reference can be used with the comparator
- Low-pass filter converts a digital bit stream into the adjustable, ratiometric analog reference

Figure 2. Analog System Block Diagram

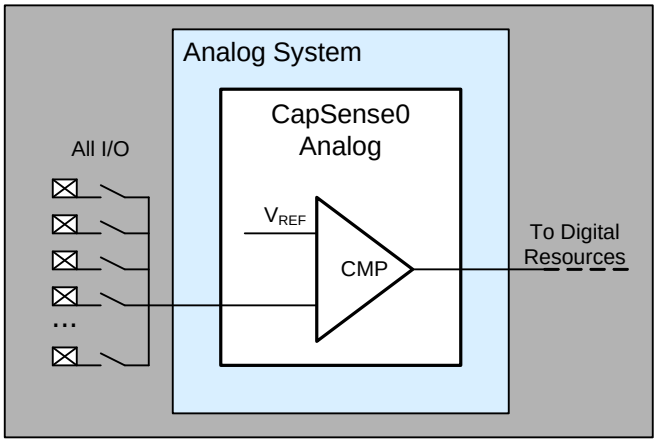

The Analog Multiplexer System

The analog mux bus can connect to every GPIO pin. Pins can be connected to the bus individually or in any combination. The bus also connects to the analog system. Switch-control logic enables selected pins to precharge continuously under hardware control. This enables capacitive measurement for applications such as touch sensing. Other multiplexer applications include:

- Track pad, finger sensing.
- Chip-wide mux that allows analog input from any I/O pin.
- Crosspoint connection between any I/O pin combination.

Additional System Resources

System resources, some of which have been previously listed, provide additional capability useful for complete systems. Brief statements describing the merits of each system resource are presented.

- Digital clock dividers provide three customizable clock frequencies for use in applications. The clocks can be routed to both the digital and analog systems.
- The I^2C module provides communication up to 400 kHz over two wires. Slave, master, and multi-master modes are all supported.
- LVD interrupts can signal the application of falling voltage levels, while the advanced power-on reset (POR) circuit eliminates the need for a system supervisor.
- An internal 1.3 V voltage reference provides an absolute reference for the analog system.
- Versatile analog multiplexer system.

PSoC Device Characteristics

Depending on your PSoC device characteristics, the digital and analog systems can have a varying number of digital and analog blocks. Table 1 lists the resources available for specific PSoC device groups. The PSoC device covered by this datasheet is highlighted in Table 1

Table 1. PSoC Device Characteristics

PSoC Part Number	Digital I/O	Digital Rows	Digital Blocks	Analog Inputs	Analog Outputs	Analog Columns	Analog Blocks	SRAM Size	Flash Size
CY8C29x66 [1]	up to 64	4	16	up to 12	4	4	12	2 K	32 K
CY8C28xxx	up to 44	up to 3	up to 12	up to 44	up to 4	up to 6	up to 12 + 4 [2]	1 K	16 K
CY8C27x43	up to 44	2	8	up to 12	4	4	12	256	16 K
CY8C24x94 [1]	up to 56	1	4	up to 48	2	2	6	1 K	16 K
CY8C24x23A [1]	up to 24	1	4	up to 12	2	2	6	256	4 K
CY8C23x33	up to 26	1	4	up to 12	2	2	4	256	8 K
CY8C22x45 [1]	up to 38	2	8	up to 38	0	4	6 [2]	1 K	16 K
CY8C21x45 [1]	up to 24	1	4	up to 24	0	4	6 [2]	512	8 K
CY8C21x34 [1]	up to 28	1	4	28	0	2	4 [2]	512	8 K
CY8C21x23	up to 16	1	4	up to 8	0	2	4 [2]	256	4 K
CY8C21x12 [1]	up to 24	1	1 [2]	24	0	0	1 [2]	512	8 K
CY8C20x34 [1]	up to 28	0	0	up to 28	0	0	3 [2, 3]	512	8 K
CY8C20xx6	up to 36	0	0	up to 36	0	0	3 [2, 3]	up to 2 K	up to 32 K

Getting Started

For in-depth information, along with detailed programming details, see the *PSoC® Technical Reference Manual*.

For up-to-date ordering, packaging, and electrical specification information, see the latest PSoC device datasheets on the web.

Application Notes

Cypress application notes are an excellent introduction to the wide variety of possible PSoC designs.

Development Kits

PSoC Development Kits are available online from and through a growing number of regional and global distributors, which include Arrow, Avnet, Digi-Key, Farnell, Future Electronics, and Newark.

Training

Free PSoC technical training (on demand, webinars, and workshops), which is available online via www.cypress.com, covers a wide variety of topics and skill levels to assist you in your designs.

CYPros Consultants

Certified PSoC consultants offer everything from technical assistance to completed PSoC designs. To contact or become a PSoC consultant go to the CYPros Consultants web site.

Solutions Library

Visit our growing library of solution focused designs. Here you can find various application designs that include firmware and hardware design files that enable you to complete your designs quickly.

Technical Support

Technical support – including a searchable Knowledge Base articles and technical forums – is also available online. If you cannot find an answer to your question, call our Technical Support hotline at 1-800-541-4736.

Notes
1. Automotive qualified devices available in this group.
2. Limited analog functionality.
3. Two analog blocks and one CapSense® block.

Development Tools

PSoC Designer™ is the revolutionary integrated design environment (IDE) that you can use to customize PSoC to meet your specific application requirements. PSoC Designer software accelerates system design and time to market. Develop your applications using a library of precharacterized analog and digital peripherals (called user modules) in a drag-and-drop design environment. Then, customize your design by leveraging the dynamically generated application programming interface (API) libraries of code. Finally, debug and test your designs with the integrated debug environment, including in-circuit emulation and standard software debug features. PSoC Designer includes:

- Application editor graphical user interface (GUI) for device and user module configuration and dynamic reconfiguration
- Extensive user module catalog
- Integrated source-code editor (C and assembly)
- Free C compiler with no size restrictions or time limits
- Built-in debugger
- In-circuit emulation
- Built-in support for communication interfaces:
  - Hardware and software I^2C slaves and masters
  - Full-speed USB 2.0
  - Up to four full-duplex universal asynchronous receiver/transmitters (UARTs), SPI master and slave, and wireless

PSoC Designer supports the entire library of PSoC 1 devices and runs on Windows XP, Windows Vista, and Windows 7.

PSoC Designer Software Subsystems

Design Entry

In the chip-level view, choose a base device to work with. Then select different onboard analog and digital components that use the PSoC blocks, which are called user modules. Examples of user modules are ADCs, DACs, amplifiers, and filters. Configure the user modules for your chosen application and connect them to each other and to the proper pins. Then generate your project. This prepopulates your project with APIs and libraries that you can use to program your application.

The tool also supports easy development of multiple configurations and dynamic reconfiguration. Dynamic reconfiguration makes it possible to change configurations at run time. In essence, this allows you to use more than 100 percent of PSoC's resources for an application.

Code Generation Tools

The code generation tools work seamlessly within the PSoC Designer interface and have been tested with a full range of debugging tools. You can develop your design in C, assembly, or a combination of the two.

Assemblers. The assemblers allow you to merge assembly code seamlessly with C code. Link libraries automatically use absolute addressing or are compiled in relative mode, and are linked with other software modules to get absolute addressing.

C Language Compilers. C language compilers are available that support the PSoC family of devices. The products allow you to create complete C programs for the PSoC family devices. The optimizing C compilers provide all of the features of C, tailored to the PSoC architecture. They come complete with embedded libraries providing port and bus operations, standard keypad and display support, and extended math functionality.

Debugger

PSoC Designer has a debug environment that provides hardware in-circuit emulation, allowing you to test the program in a physical system while providing an internal view of the PSoC device. Debugger commands allow you to read and program and read and write data memory, and read and write I/O registers. You can read and write CPU registers, set and clear breakpoints, and provide program run, halt, and step control. The debugger also allows you to create a trace buffer of registers and memory locations of interest.

Online Help System

The online help system displays online, context-sensitive help. Designed for procedural and quick reference, each functional subsystem has its own context-sensitive help. This system also provides tutorials and links to FAQs and an online support Forum to aid the designer.

In-Circuit Emulator

A low-cost, high-functionality in-circuit emulator (ICE) is available for development support. This hardware can program single devices.

The emulator consists of a base unit that connects to the PC using a USB port. The base unit is universal and operates with all PSoC devices. Emulation pods for each device family are available separately. The emulation pod takes the place of the PSoC device in the target board and performs full-speed (24 MHz) operation.

Designing with PSoC Designer

The development process for the PSoC device differs from that of a traditional fixed function microprocessor. The configurable analog and digital hardware blocks give the PSoC architecture a unique flexibility that pays dividends in managing specification change during development and by lowering inventory costs. These configurable resources, called PSoC Blocks, have the ability to implement a wide variety of user-selectable functions.

The PSoC development process can be summarized in the following four steps:

1. Select User Modules
2. Configure User Modules
3. Organize and Connect
4. Generate, Verify, and Debug

Select Components

PSoC Designer provides a library of pre-built, pre-tested hardware peripheral components called "user modules". User modules make selecting and implementing peripheral devices, both analog and digital, simple.

Configure Components

Each of the User Modules you select establishes the basic register settings that implement the selected function. They also provide parameters and properties that allow you to tailor their precise configuration to your particular application. For example, a PWM User Module configures one or more

digital PSoC blocks, one for each 8 bits of resolution. The user module parameters permit you to establish the pulse width and duty cycle. Configure the parameters and properties to correspond to your chosen application. Enter values directly or by selecting values from drop-down menus. All the user modules are documented in datasheets that may be viewed directly in PSoC Designer or on the Cypress website. These user module datasheets explain the internal operation of the User Module and provide performance specifications. Each datasheet describes the use of each user module parameter, and other information you may need to successfully implement your design.

Organize and Connect

You build signal chains at the chip level by interconnecting user modules to each other and the I/O pins. You perform the selection, configuration, and routing so that you have complete control over all on-chip resources.

Generate, Verify, and Debug

When you are ready to test the hardware configuration or move on to developing code for the project, you perform the "Generate Configuration Files" step. This causes PSoC Designer to generate source code that automatically configures the device to your specification and provides the software for the system. The generated code provides application programming interfaces (APIs) with high-level functions to control and respond to hardware events at run time and interrupt service routines that you can adapt as needed.

A complete code development environment allows you to develop and customize your applications in C, assembly language, or both.

The last step in the development process takes place inside PSoC Designer's Debugger (access by clicking the Connect icon). PSoC Designer downloads the HEX image to the ICE where it runs at full speed. PSoC Designer debugging capabilities rival those of systems costing many times more. In addition

to traditional single-step, run-to-breakpoint and watch-variable features, the debug interface provides a large trace buffer and allows you to define complex breakpoint events that include monitoring address and data bus values, memory locations and external signals.

Pinouts

The CY8C21x12 PSoC device is available in a variety of packages which are listed and illustrated in the following tables. Every port pin (labeled with a “P”) is capable of digital I/O and connection to the common analog bus. However, V_{SS}, V_{DD}, and XRES are not capable of digital I/O.

20-pin Part Pinout

Table 2. 20-pin Part Pinout (shrink small-outline package (SSOP))

Pin No.	Type		Name	Description
	Digital	Analog		
1	I/O	I, M	P0[7]	Analog column mux input
2	I/O	I, M	P0[5]	Analog column mux input
3	I/O	I, M	P0[3]	Analog column mux input, C_{MOD} capacitor pin
4	I/O	I, M	P0[1]	Analog column mux input, C_{MOD} capacitor pin
5	Power		V_{SS}	Ground connection
6	I/O	M	P1[7]	I^2C serial clock (SCL)
7	I/O	M	P1[5]	I^2C serial data (SDA)
8	I/O	M	P1[3]	
9	I/O	M	P1[1]	I^2C SCL, ISSP-SCLK[4]
10	Power		V_{SS}	Ground connection
11	I/O	M	P1[0]	I^2C SDA, ISSP-SDATA[4]
12	I/O	M	P1[2]	
13	I/O	M	P1[4]	Optional external clock input (EXTCLK)
14	I/O	M	P1[6]	
15	Input		XRES	Active high external reset with internal pull-down
16	I/O	I, M	P0[0]	Analog column mux input
17	I/O	I, M	P0[2]	Analog column mux input
18	I/O	I, M	P0[4]	Analog column mux input
19	I/O	I, M	P0[6]	Analog column mux input
20	Power		V_{DD}	Supply voltage

LEGEND A = Analog, I = Input, O = Output, and M = Analog Mux Input.

Figure 3. CY8C21312 20-pin PSoC Device

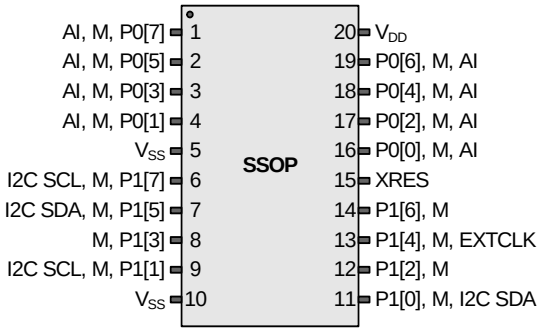

Note
4. These are the ISSP pins, which are not high Z when coming out of POR. See the *PSoC Technical Reference Manual* for details.

28-pin Part Pinout

Table 3. 28-pin Part Pinout (SSOP)

Pin No.	Type		Name	Description
	Digital	Analog		
1	I/O	I, M	P0[7]	Analog column mux input
2	I/O	I, M	P0[5]	Analog column mux input
3	I/O	I, M	P0[3]	Analog column mux input, C_{MOD} capacitor pin
4	I/O	I, M	P0[1]	Analog column mux input, C_{MOD} capacitor pin
5	I/O	M	P2[7]	
6	I/O	M	P2[5]	
7	I/O	M	P2[3]	
8	I/O	M	P2[1]	
9	Power		V_{SS}	Ground connection
10	I/O	M	P1[7]	I^2C SCL
11	I/O	M	P1[5]	I^2C SDA
12	I/O	M	P1[3]	
13	I/O	M	P1[1]	I^2C SCL, ISSP-SCLK[5]
14	Power		V_{SS}	Ground connection
15	I/O	M	P1[0]	I^2C SDA, ISSP-SDATA[5]
16	I/O	M	P1[2]	
17	I/O	M	P1[4]	Optional EXTCLK
18	I/O	M	P1[6]	
19	Input		XRES	Active high external reset with internal pull-down
20	I/O	M	P2[0]	
21	I/O	M	P2[2]	
22	I/O	M	P2[4]	
23	I/O	M	P2[6]	
24	I/O	I, M	P0[0]	Analog column mux input
25	I/O	I, M	P0[2]	Analog column mux input
26	I/O	I, M	P0[4]	Analog column mux input
27	I/O	I, M	P0[6]	Analog column mux input
28	Power		V_{DD}	Supply voltage

LEGEND: A = Analog, I = Input, O = Output, and M = Analog Mux Input.

Figure 4. CY8C21512 28-pin PSoC Device

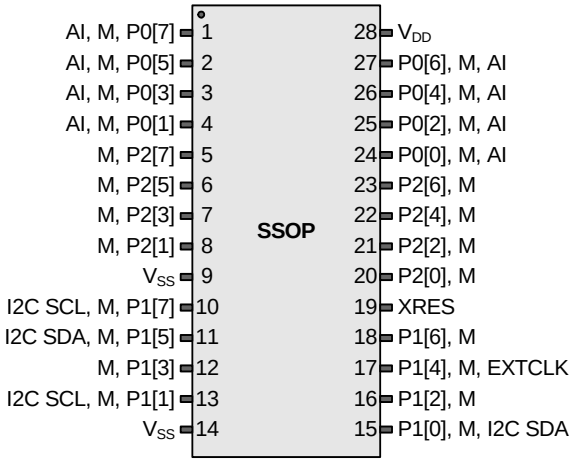

Note
5. These are the ISSP pins, which are not high Z when coming out of POR. See the *PSoC Technical Reference Manual* for details.

Registers

Register Conventions

This section lists the registers of the CY8C21x12 PSoC device. For detailed register information, refer to the *PSoC Technical Reference Manual*.

The register conventions specific to this section are listed in the following table.

Convention	Description
R	Read register or bit(s)
W	Write register or bit(s)
L	Logical register or bit(s)
C	Clearable register or bit(s)
#	Access is bit specific

Register Mapping Tables

The PSoC device has a total register address space of 512 bytes. The register space is referred to as I/O space and is divided into two banks, bank 0 and bank 1. The XIO bit in the Flag register (CPU_F) determines which bank the user is currently in. When the XIO bit is set to ‘1’, the user is in bank 1.

Note In the following register mapping tables, blank fields are Reserved and must not be accessed.

Table 4. Register Map 0 Table: User Space

Name	Addr (0,Hex)	Access	Name	Addr (0,Hex)	Access	Name	Addr (0,Hex)	Access	Name	Addr (0,Hex)	Access
PRT0DR	00	RW		40			80			C0	
PRT0IE	01	RW		41			81			C1	
PRT0GS	02	RW		42			82			C2	
PRT0DM2	03	RW		43			83			C3	
PRT1DR	04	RW		44		CSREF_CR1	84	RW		C4	
PRT1IE	05	RW		45			85			C5	
PRT1GS	06	RW		46			86			C6	
PRT1DM2	07	RW		47			87			C7	
PRT2DR	08	RW		48			88			C8	
PRT2IE	09	RW		49			89			C9	
PRT2GS	0A	RW		4A			8A			CA	
PRT2DM2	0B	RW		4B			8B			CB	
	0C			4C			8C			CC	
	0D			4D			8D			CD	
	0E			4E			8E			CE	
	0F			4F			8F			CF	
	10			50			90		CUR_PP	D0	RW
	11			51			91		STK_PP	D1	RW
	12			52			92			D2	
	13			53			93		IDX_PP	D3	RW
	14			54			94		MVR_PP	D4	RW
	15			55			95		MVW_PP	D5	RW
	16			56			96		I2C_CFG	D6	RW
	17			57			97		I2C_SCR	D7	#
	18			58			98		I2C_DR	D8	RW
	19			59			99		I2C_MSCR	D9	#
	1A			5A			9A		INT_CLR0	DA	RW
	1B			5B			9B		INT_CLR1	DB	RW
	1C			5C			9C			DC	
	1D			5D			9D		INT_CLR3	DD	RW
	1E			5E			9E		INT_MSK3	DE	RW
	1F			5F			9F			DF	
CSCNT_DR0	20	#		60			A0		INT_MSK0	E0	RW
CSCNT_DR1	21	W	AMUX_CFG	61	RW		A1		INT_MSK1	E1	RW
CSCNT_DR2	22	RW	CSCMP_CR0	62	RW		A2		INT_VC	E2	RC
CSCNT_CR0	23	#		63			A3		RES_WDT	E3	W
CSMOD0_DR0	24	#	CSCMP_CR1	64	#		A4			E4	
CSMOD0_DR1	25	W		65			A5			E5	
CSMOD0_DR2	26	RW	CSCMP_CR2	66	RW		A6		CSCMP_CR5	E6	RW
CSMOD0_CR0	27	#		67			A7		CSCMP_CR6	E7	RW
CSMOD1_DR0	28	#		68			A8			E8	
CSMOD1_DR1	29	W	CSREF_CR0	69	#		A9			E9	
CSMOD1_DR2	2A	RW		6A			AA			EA	
CSMOD1_CR0	2B	#		6B			AB			EB	
LDB0_DR0	2C	#	TMP_DR0	6C	RW		AC			EC	
LDB0_DR1	2D	W	TMP_DR1	6D	RW		AD			ED	
LDB0_DR2	2E	RW	TMP_DR2	6E	RW		AE			EE	
LDB0_CR0	2F	#	TMP_DR3	6F	RW		AF			EF	
	30			70		RDI0RI	B0	RW		F0	
	31			71		RDI0SYN	B1	RW		F1	
	32			72		RDI0IS	B2	RW		F2	
	33			73		RDI0LT0	B3	RW		F3	
	34			74		RDI0LT1	B4	RW		F4	
	35			75		RDI0RO0	B5	RW		F5	
	36		CSCMP_CR3	76	RW	RDI0RO1	B6	RW		F6	
	37		CSCMP_CR4	77	RW		B7		CPU_F	F7	RL
	38			78			B8			F8	
	39			79			B9			F9	
	3A			7A			BA			FA	
	3B			7B			BB			FB	
	3C			7C			BC			FC	
	3D			7D			BD			FD	
	3E			7E			BE		CPU_SCR1	FE	#
	3F			7F			BF		CPU_SCR0	FF	#

Blank fields are Reserved and must not be accessed. # Access is bit specific.

Table 5. Register Map 1 Table: Configuration Space

Name	Addr (1,Hex)	Access	Name	Addr (1,Hex)	Access	Name	Addr (1,Hex)	Access	Name	Addr (1,Hex)	Access
PRT0DM0	00	RW		40			80			C0	
PRT0DM1	01	RW		41			81			C1	
PRT0IC0	02	RW		42			82			C2	
PRT0IC1	03	RW		43			83			C3	
PRT1DM0	04	RW		44			84			C4	
PRT1DM1	05	RW		45			85			C5	
PRT1IC0	06	RW		46			86			C6	
PRT1IC1	07	RW		47			87			C7	
PRT2DM0	08	RW		48			88			C8	
PRT2DM1	09	RW		49			89			C9	
PRT2IC0	0A	RW		4A			8A			CA	
PRT2IC1	0B	RW		4B			8B			CB	
	0C			4C			8C			CC	
	0D			4D			8D			CD	
	0E			4E			8E			CE	
	0F			4F			8F			CF	
	10			50			90		GDI_O_IN	D0	RW
	11			51			91		GDI_E_IN	D1	RW
	12			52			92		GDI_O_OU	D2	RW
	13			53			93		GDI_E_OU	D3	RW
	14			54			94			D4	
	15			55			95			D5	
	16			56			96			D6	
	17			57			97			D7	
	18			58			98		MUX_CR0	D8	RW
	19			59			99		MUX_CR1	D9	RW
	1A			5A			9A		MUX_CR2	DA	RW
	1B			5B			9B		MUX_CR3	DB	RW
	1C			5C			9C			DC	
	1D			5D			9D			DD	
	1E			5E			9E		OSC_CR4	DE	RW
	1F			5F			9F		OSC_CR3	DF	RW
CSCNT_CR1	20	RW	CSCLK_CR0	60	RW		A0		OSC_CR0	E0	RW
CSCNT_CR2	21	RW	CSCLK_CR1	61	RW		A1		OSC_CR1	E1	RW
CSCNT_CR3	22	RW		62			A2		OSC_CR2	E2	RW
	23		CSREF_CR2	63	RW		A3		VLT_CR	E3	RW
CSMOD0_CR1	24	RW	CSCMP_CR7	64	RW		A4		VLT_CMP	E4	R
CSMOD0_CR2	25	RW		65			A5			E5	
CSMOD0_CR3	26	RW	CSREF_CR3	66	RW		A6		CSREF_CR4	E6	RW
	27		CSCMP_CR8	67	RW		A7			E7	
CSMOD1_CR1	28	RW		68			A8		IMO_TR	E8	W
CSMOD1_CR2	29	RW		69			A9		ILO_TR	E9	W
CSMOD1_CR3	2A	RW		6A			AA		BDG_TR	EA	RW
	2B		CSCLK_CR2	6B	RW		AB		ECO_TR	EB	W
LDB0_FN	2C	RW	TMP_DR0	6C	RW		AC			EC	
LDB0_IN	2D	RW	TMP_DR1	6D	RW		AD			ED	
LDB0_OU	2E	RW	TMP_DR2	6E	RW		AE			EE	
	2F		TMP_DR3	6F	RW		AF			EF	
	30			70		RDI0RI	B0	RW		F0	
	31			71		RDI0SYN	B1	RW		F1	
	32			72		RDI0IS	B2	RW		F2	
	33			73		RDI0LT0	B3	RW		F3	
	34			74		RDI0LT1	B4	RW		F4	
	35			75		RDI0RO0	B5	RW		F5	
	36			76		RDI0RO1	B6	RW		F6	
	37			77			B7		CPU_F	F7	RL
	38			78			B8			F8	
	39			79			B9			F9	
	3A			7A			BA			FA	
	3B			7B			BB			FB	
	3C			7C			BC			FC	
	3D			7D			BD			FD	
	3E			7E			BE		CPU_SCR1	FE	#
	3F			7F			BF		CPU_SCR0	FF	#

Blank fields are Reserved and must not be accessed. # Access is bit specific.

Absolute Maximum Ratings

Exceeding maximum ratings may shorten the useful life of the device. User guidelines are not tested.

Table 6. Absolute Maximum Ratings

Symbol	Description	Min	Typ	Max	Units	Notes
T_{STG}	Storage temperature	–55	+25	+125	°C	Higher storage temperatures reduce data retention time. Recommended storage temperature is +25 °C ± 25 °C. Time spent in storage at a temperature greater than 65 °C counts toward the $Flash_{DR}$ electrical specification in Table 13 on page 17. Maximum combined storage and operational time at +125 °C is 7000 hours.
$T_{BAKETEMP}$	Bake temperature	–	125	See package label	°C	
$t_{BAKETIME}$	Bake time	See package label	–	72	Hours	
T_A	Ambient temperature with power applied	–40	–	+125	°C	
V_{DD}	Supply voltage on V_{DD} relative to V_{SS}	–0.5	–	+6.0	V	
V_{IO}	DC input voltage	V_{SS} – 0.5	–	V_{DD} + 0.5	V	
V_{IOZ}	DC voltage applied to tristate	V_{SS} – 0.5	–	V_{DD} + 0.5	V	
I_{MIO}	Maximum current into any port pin	–25	–	+50	mA	
ESD	Electrostatic discharge (ESD) voltage	2000	–	–	V	Human body model ESD.
LU	Latch-up current	–	–	200	mA	

Operating Temperature

Table 7. Operating Temperature

Symbol	Description	Min	Typ	Max	Units	Notes
T_A	Ambient temperature	–40	–	+125	°C	
T_J	Junction temperature	–40	–	+135	°C	The temperature rise from ambient to junction is package specific. See Table 24 on page 30. The user must limit the power consumption to comply with this requirement.

Electrical Specifications

This section presents the DC and AC electrical specifications of the automotive CY8C21x12 PSoC device. For the most up to date electrical specifications, confirm that you have the most recent datasheet by going to the web at http//www.cypress.com.

Specifications are valid for –40 °C ≤ T_A ≤ 125 °C and T_J ≤ 135 °C as specified, except where noted. Refer to Table 14 on page 18 for the electrical specifications for the IMO using slow IMO (SLIMO) mode.

Figure 5. Voltage versus CPU Frequency

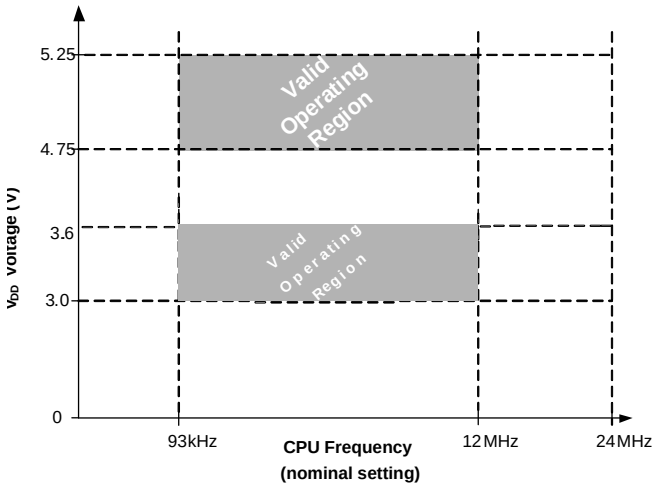

Figure 6. IMO Frequency Trim Options

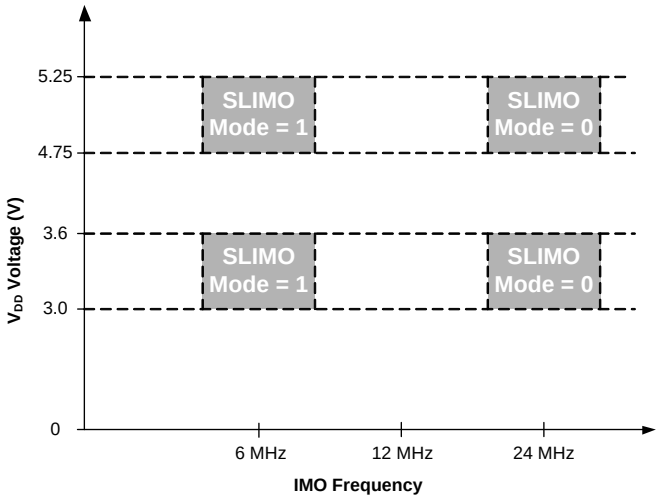

DC Electrical Characteristics

DC Chip-Level Specifications

Table 8 lists guaranteed maximum and minimum specifications for the voltage and temperature ranges: 4.75 V to 5.25 V and –40 °C ≤ T_A ≤ 125 °C or 3.0 V to 3.6 V and –40 °C ≤ TA ≤ 125 °C, respectively. Typical parameters apply to 5 V or 3.3 V at 25 °C and are for design guidance only.

Table 8. DC Chip-Level Specifications

Symbol	Description	Min	Typ	Max	Units	Notes
V_{DD}	Supply voltage	3	–	5.25	V	See Table 12 on page 16.
I_{DD}	Supply current, IMO = 24 MHz	–	4	8	mA	Conditions are V_{DD} = 5.25 V, –40 °C ≤ T_A ≤ 125 °C, CPU = 3 MHz, 48 MHz disabled. VC1 = 1.5 MHz, VC2 = 93.75 kHz, VC3 = 0.366 kHz.
I_{DD3}	Supply current, IMO = 24 MHz	–	4	8	mA	Conditions are V_{DD} = 3.3 V, –40 °C ≤ TA ≤ 125 °C, CPU = 3 MHz, 48 MHz disabled. VC1 = 1.5 MHz, VC2 = 93.75 kHz, VC3 = 0.366 kHz.
I_{SB}	Sleep (mode) current with POR, LVD, sleep timer, WDT, and ILO active. Mid temperature range.	–	5	12	µA	V_{DD} = 5.25 V, –40 °C ≤ T_A ≤ 55 °C.
I_{SBH}	Sleep (mode) current with POR, LVD, sleep timer, WDT, and ILO active. High temperature range.	–	5	100	µA	V_{DD} = 5.25 V, 55 °C ≤ T_A ≤ 125 °C.
V_{REF}	Reference voltage (Bandgap)	1.25	1.30	1.35	V	

DC GPIO Specifications

Table 9 lists guaranteed maximum and minimum specifications for the voltage and temperature ranges: 4.75 V to 5.25 V and –40 °C ≤ T_A ≤ 125 °C or 3.0 V to 3.6 V and –40 °C ≤ TA ≤ 125 °C, respectively. Typical parameters apply to 5 V or 3.3 V at 25 °C and are for design guidance only.

Table 9. DC GPIO Specifications

Symbol	Description	Min	Typ	Max	Units	Notes
R_{PU}	Pull-up resistor	4	5.6	8	kΩ	
R_{PD}	Pull-down resistor	4	5.6	8	kΩ	Also applies to the internal pull-down resistor on the XRES pin
V_{OH}	High output level	V_{DD} – 1.0	–	–	V	I_{OH} = 10 mA, V_{DD} = 4.75 to 5.25 V (8 total loads, 4 on even port pins (for example, P0[2], P1[4]), 4 on odd port pins (for example, P0[3], P1[5])).
V_{OL}	Low output level	–	–	0.75	V	I_{OL} = 25 mA, V_{DD} = 4.75 to 5.25 V (8 total loads, 4 on even port pins (for example, P0[2], P1[4]), 4 on odd port pins (for example, P0[3], P1[5])).
I_{OH}	High level source current	10	–	–	mA	V_{OH} ≥ V_{DD} – 1.0 V, see the limitations of the total current in the note for V_{OH}.
I_{OL}	Low level sink current	25	–	–	mA	V_{OL} ≤ 0.75 V, see the limitations of the total current in the note for V_{OL}.
V_{IL}	Input low level	–	–	0.8	V	
V_{IH}	Input high level	2.1	–		V	
V_H	Input hysteresis	–	60	–	mV	
I_{IL}	Input leakage (absolute value)	–	1	–	nA	Gross tested to 1 µA.
C_{IN}	Capacitive load on pins as input	–	3.5	10	pF	Package and pin dependent. T_A = 25 °C.
C_{OUT}	Capacitive load on pins as output	–	3.5	10	pF	Package and pin dependent. T_A = 25 °C.

DC Operational Amplifier Specifications

Table 10 lists guaranteed maximum and minimum specifications for the voltage and temperature ranges: 4.75 V to 5.25 V and –40 °C ≤ T_A ≤ 125 °C or 3.0 V to 3.6 V and –40 °C ≤ TA ≤ 125 °C, respectively. Typical parameters apply to 5 V or 3.3 V at 25 °C and are for design guidance only.

Table 10. DC Operational Amplifier Specifications

Symbol	Description	Min	Typ	Max	Units	Notes
V_{OSOA}	Input offset voltage (absolute value)	–	2.5	15	mV	
TCV_{OSOA}	Average input offset voltage drift	–	10	–	µV/°C	
I_{EBOA}[6]	Input leakage current (Port 0 analog pins)	–	200	–	pA	Gross tested to 1 µA.
C_{INOA}	Input capacitance (Port 0 analog pins)	–	4.5	9.5	pF	Package and pin dependent. T_A = 25 °C.
V_{CMOA}	Common mode voltage range	0.0	–	V_{DD} – 1	V	
G_{OLOA}	Open loop gain	–	80	–	dB	
I_{SOA}	Amplifier supply current	–	10	100	µA	

DC Analog Mux Bus Specifications

Table 11 lists guaranteed maximum and minimum specifications for the voltage and temperature ranges: 4.75 V to 5.25 V and –40 °C ≤ T_A ≤ 125 °C or 3.0 V to 3.6 V and –40 °C ≤ TA ≤ 125 °C, respectively. Typical parameters apply to 5 V or 3.3 V at 25 °C and are for design guidance only.

Table 11. DC Analog Mux Bus Specifications

Symbol	Description	Min	Typ	Max	Units	Notes
R_{SW}	Switch resistance to common analog bus	–	–	400	Ω	
RV_{DD}	Resistance of initialization switch to V_{DD}	–	–	800	Ω	

DC POR and LVD Specifications

Table 12 lists guaranteed maximum and minimum specifications for the voltage and temperature ranges: 4.75 V to 5.25 V and –40 °C ≤ T_A ≤ 125 °C or 3.0 V to 3.6 V and –40 °C ≤ TA ≤ 125 °C, respectively. Typical parameters apply to 5 V or 3.3 V at 25 °C and are for design guidance only.

Table 12. DC POR and LVD Specifications

Symbol	Description	Min	Typ	Max	Units	Notes
	V_{DD} value for PPOR trip					V_{DD} must be greater than or equal to 2.5 V during startup, reset from the XRES pin, or reset from watchdog.
V_{PPOR0}	PORLEV[1:0] = 00b	–	2.36	2.40	V	
V_{PPOR1}	PORLEV[1:0] = 01b	–	2.82	2.95	V	
V_{PPOR2}	PORLEV[1:0] = 10b	–	4.55	4.70	V	
	V_{DD} value for LVD trip					
V_{LVD0}	VM[2:0] = 000b	2.40	2.45	2.51[7]	V	
V_{LVD1}	VM[2:0] = 001b	2.85	2.92	2.99[8]	V	
V_{LVD2}	VM[2:0] = 010b	2.95	3.02	3.09	V	
V_{LVD3}	VM[2:0] = 011b	3.06	3.13	3.20	V	
V_{LVD4}	VM[2:0] = 100b	4.37	4.48	4.55	V	
V_{LVD5}	VM[2:0] = 101b	4.50	4.64	4.75	V	
V_{LVD6}	VM[2:0] = 110b	4.62	4.73	4.83	V	
V_{LVD7}	VM[2:0] = 111b	4.71	4.81	4.95	V	

Notes
6. Atypical behavior: I_{EBOA} of Port 0 Pin 0 is below 1 nA at 25 °C; 50 nA over temperature. Use Port 0 Pins 1-7 for the lowest leakage of 200 pA.
7. Always greater than 50 mV above V_{PPOR0} (PORLEV[1:0] = 00b) for falling supply.
8. Always greater than 50 mV above V_{PPOR1} (PORLEV[1:0] = 01b) for falling supply.

DC Programming Specifications

Table 13 lists guaranteed maximum and minimum specifications for the voltage and temperature ranges: 4.75 V to 5.25 V and –40 °C ≤ T_A ≤ 125 °C or 3.0 V to 3.6 V and –40 °C ≤ TA ≤ 125 °C, respectively. Typical parameters apply to 5 V or 3.3 V at 25 °C and are for design guidance only.

Table 13. DC Programming Specifications

Symbol	Description	Min	Typ	Max	Units	Notes
V_{DDP}	V_{DD} for programming and erase	4.5	5	5.5	V	This specification applies to the functional requirements of external programmer tools
V_{DDLV}	Low V_{DD} for verify	3	3.1	3.2	V	This specification applies to the functional requirements of external programmer tools
V_{DDHV}	High V_{DD} for verify	5.1	5.2	5.3	V	This specification applies to the functional requirements of external programmer tools
$V_{DDIWRITE}$	Supply voltage for flash write operation	3	–	5.25	V	This specification applies to this device when it is executing internal flash writes
I_{DDP}	Supply current during programming or verify	–	5	25	mA	
V_{ILP}	Input low voltage during programming or verify	–	–	0.8	V	
V_{IHP}	Input high voltage during programming or verify	2.2	–	–	V	
I_{ILP}	Input current when applying V_{ILP} to P1[0] or P1[1] during programming or verify	–	–	0.2	mA	Driving internal pull-down resistor.
I_{IHP}	Input current when applying V_{IHP} to P1[0] or P1[1] during programming or verify	–	–	1.5	mA	Driving internal pull-down resistor.
V_{OLV}	Output low voltage during programming or verify	–	–	0.75	V	
V_{OHV}	Output high voltage during programming or verify	V_{DD} – 1	–	V_{DD}	V	
$Flash_{ENPB}$	Flash endurance (per block) [9]	100	–	–	–	Erase/write cycles per block.
$Flash_{ENT}$	Flash endurance (total) [9, 10]	12,800	–	–	–	Erase/write cycles.
$Flash_{DR}$	Flash data retention [11]	15	–	–	Years	

Notes

9. For the full temperature range, the user must employ a temperature sensor user module (FlashTemp) or other temperature sensor, and feed the result to the temperature argument before writing. Refer to the Flash APIs Application Note AN2015 for more information.
10. The maximum total number of allowed erase/write cycles is the minimum $Flash_{ENPB}$ value multiplied by the number of flash blocks in the device.
11. Flash data retention based on the use condition of ≤ 7000 hours at T_A ≤ 125 °C and the remaining time at T_A ≤ 65 °C.

AC Electrical Characteristics

AC Chip-Level Specifications

Table 14 lists guaranteed maximum and minimum specifications for the voltage and temperature ranges: 4.75 V to 5.25 V and –40 °C ≤ T_A ≤ 125 °C or 3.0 V to 3.6 V and –40 °C ≤ TA ≤ 125 °C, respectively. Typical parameters apply to 5 V or 3.3 V at 25 °C and are for design guidance only.

Table 14. AC Chip-Level Specifications

Symbol	Description	Min	Typ	Max	Units	Notes
F_{IMO24}	IMO frequency for 24 MHz	22.8 [12]	24	25.2 [12]	MHz	Trimmed using factory trim values. See Figure 6 on page 14. SLIMO mode = 0.
F_{IMO6}	IMO frequency for 6 MHz	5.5 [12]	6	6.5 [12]	MHz	Trimmed using factory trim values. See Figure 6 on page 14. SLIMO mode = 1.
F_{CPU1}	CPU frequency (5 V V_{DD} nominal)	0.09 [12]	12	12.6 [12]	MHz	SLIMO mode = 0.
F_{BLK5}	Digital PSoC block frequency (5 V V_{DD} nominal)	0	24	25.2 [12]	MHz	Refer to Table 17 on page 20.
F_{BLK33}	Digital PSoC block frequency (3.3 V V_{DD} nominal)	0	24	25.2 [12]	MHz	Refer to Table 17 on page 20.
F_{32K1}	ILO frequency	15	32	64	kHz	This specification applies when the ILO has been trimmed.
F_{32KU}	ILO untrimmed frequency	5	–	100	kHz	After a reset and before the M8C processor starts to execute, the ILO is not trimmed.
t_{XRST}	External reset pulse width	10	–	–	µs	
DC24M	24 MHz duty cycle	40	50	60	%	
DC_{ILO}	ILO duty cycle	20	50	80	%	
Step24M	24 MHz trim step size	–	50	–	kHz	
F_{MAX}	Maximum frequency of signal on row input or row output.	–	–	12.6 [12]	MHz	
$SR_{POWERUP}$	Power supply slew rate	–	–	250	V/ms	V_{DD} slew rate during power up.
$t_{POWERUP}$	Time between end of POR state and CPU code execution	–	16	100	ms	Power-up from 0 V.
t_{JIT_IMO} [13]	24 MHz IMO cycle-to-cycle jitter (RMS)	–	200	700	ps	
	24 MHz IMO long term N cycle-to-cycle jitter (RMS)	–	300	900		N = 32
	24 MHz IMO period jitter (RMS)	–	100	400		

Notes
12. Accuracy derived from Internal Main Oscillator with appropriate trim for V_{DD} range.
13. Refer to Cypress Jitter Specifications document, Understanding Datasheet Jitter Specifications for Cypress Timing Products, for more information.

AC GPIO Specifications

Table 15 lists guaranteed maximum and minimum specifications for the voltage and temperature ranges: 4.75 V to 5.25 V and –40 °C ≤ T_A ≤ 125 °C or 3.0 V to 3.6 V and –40 °C ≤ TA ≤ 125 °C, respectively. Typical parameters apply to 5 V or 3.3 V at 25 °C and are for design guidance only.

Table 15. AC GPIO Specifications

Symbol	Description	Min	Typ	Max	Units	Notes
F_{GPIO}	GPIO operating frequency	0	–	12.6 [14]	MHz	Normal Strong Mode
$t_{RISEF33}$	Rise time, normal strong mode, Cload = 50 pF	2	–	30	ns	10% to 90%
t_{RISEF5}		2	–	22		
$t_{FALLF33}$	Fall time, normal strong mode, Cload = 50 pF	2	–	30	ns	10% to 90%
t_{FALLF5}		2	–	22		
t_{RISES}	Rise time, slow strong mode, Cload = 50 pF	7	27	–	ns	10% to 90%
t_{FALLS}	Fall time, slow strong mode, Cload = 50 pF	7	22	–	ns	10% to 90%

Figure 7. GPIO Timing Diagram

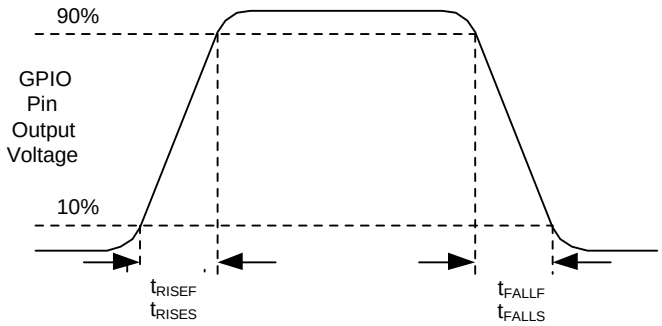

AC Operational Amplifier Specifications

Table 16 lists guaranteed maximum and minimum specifications for the voltage and temperature ranges: 4.75 V to 5.25 V and –40 °C ≤ T_A ≤ 125 °C or 3.0 V to 3.6 V and –40 °C ≤ TA ≤ 125 °C, respectively. Typical parameters apply to 5 V or 3.3 V at 25 °C and are for design guidance only.

Table 16. AC Operational Amplifier Specifications

Symbol	Description	Min	Typ	Max	Units	Notes
t_{COMP}	Comparator mode response time, 50 mV overdrive	–	–	150	ns	

Note
14. Accuracy derived from Internal Main Oscillator with appropriate trim for V_{DD} range.

AC Digital Block Specifications

Table 17 lists guaranteed maximum and minimum specifications for the voltage and temperature ranges: 4.75 V to 5.25 V and –40 °C ≤ T_A ≤ 125 °C or 3.0 V to 3.6 V and –40 °C ≤ TA ≤ 125 °C, respectively. Typical parameters apply to 5 V or 3.3 V at 25 °C and are for design guidance only.

Table 17. AC Digital Block Specifications

Function	Description	Min	Typ	Max	Units	Notes
All functions	Block input clock frequency	–	–	25.2 [15]	MHz	
Timer	Input clock frequency					
	No capture	–	–	25.2 [15]	MHz	
	With capture	–	–	25.2 [15]	MHz	
	Capture pulse width	50 [16]	–	–	ns	
Counter	Input clock frequency					
	No enable input	–	–	25.2 [15]	MHz	
	With enable input	–	–	25.2 [15]	MHz	
	Enable input pulse width	50 [16]	–	–	ns	
Dead Band	Kill pulse width					
	Asynchronous restart mode	20	–	–	ns	
	Synchronous restart mode	50 [16]	–	–	ns	
	Disable mode	50 [16]	–	–	ns	
	Input clock frequency	–	–	25.2 [15]	MHz	
CRCPRS (PRS Mode)	Input clock frequency	–	–	25.2 [15]	MHz	
CRCPRS (CRC Mode)	Input clock frequency	–	–	25.2 [15]	MHz	
SPIM	Input clock frequency	–	–	4.2 [15]	MHz	The SPI serial clock (SCLK) frequency is equal to the input clock frequency divided by 2.
SPIS	Input clock (SCLK) frequency	–	–	2.1 [15]	MHz	The input clock is the SPI SCLK in SPIS mode.
	Width of SS_ negated between transmissions	50 [16]	–	–	ns	
Transmitter	Input clock frequency	–	–	8.4 [15]	MHz	The baud rate is equal to the input clock frequency divided by 8.
Receiver	Input clock frequency	–	–	25.2 [15]	MHz	The baud rate is equal to the input clock frequency divided by 8.

Notes
15. Accuracy derived from IMO with appropriate trim for V_{DD} range.
16. 50 ns minimum input pulse width is based on the input synchronizers running at 24 MHz (42 ns nominal period).

AC External Clock Specifications

Table 18 lists guaranteed maximum and minimum specifications for the voltage and temperature ranges: 4.75 V to 5.25 V and –40 °C ≤ T_A ≤ 125 °C or 3.0 V to 3.6 V and –40 °C ≤ T_A ≤ 125 °C, respectively. Typical parameters apply to 5 V or 3.3 V at 25 °C and are for design guidance only.

Table 18. AC External Clock Specifications

Symbol	Description	Min	Typ	Max	Units	Notes
F_{OSCEXT}	Frequency	0.093	–	24.24	MHz	
–	High period	20.6	–	5300	ns	
–	Low period	20.6	–	–	ns	
–	Power-up IMO to switch	150	–	–	µs	

AC Programming Specifications

Table 19 lists guaranteed maximum and minimum specifications for the voltage and temperature ranges: 4.75 V to 5.25 V and –40 °C ≤ T_A ≤ 125 °C or 3.0 V to 3.6 V and –40 °C ≤ TA ≤ 125 °C, respectively. Typical parameters apply to 5 V or 3.3 V at 25 °C and are for design guidance only.

Table 19. AC Programming Specifications

Symbol	Description	Min	Typ	Max	Units	Notes
t_{RSCLK}	Rise time of SCLK	1	–	20	ns	
t_{FSCLK}	Fall time of SCLK	1	–	20	ns	
t_{SSCLK}	Data setup time to falling edge of SCLK	40	–	–	ns	
t_{HSCLK}	Data hold time from falling edge of SCLK	40	–	–	ns	
F_{SCLK}	Frequency of SCLK	0	–	8	MHz	
t_{ERASEB}	Flash erase time (block)	–	10	40 [17]	ms	
t_{WRITE}	Flash block write time	–	40	160 [17]	ms	
t_{DSCLK}	Data Out delay from falling edge of SCLK	–	–	50	ns	
t_{PRGH}	Total flash block program time (t_{ERASEB} + t_{WRITE}), hot	–	–	100 [17]	ms	T_J ≥ 0 °C
t_{PRGC}	Total flash block program time (t_{ERASEB} + t_{WRITE}), cold	–	–	200 [17]	ms	T_J < 0 °C

Note

17. For the full temperature range, the user must employ a temperature sensor user module (FlashTemp) or other temperature sensor, and feed the result to the temperature argument before writing. Refer to the Flash APIs Application Note AN2015 for more information.

AC I²C Specifications

Table 20 lists guaranteed maximum and minimum specifications for the voltage and temperature ranges: 4.75 V to 5.25 V and –40 °C ≤ T_A ≤ 125 °C or 3.0 V to 3.6 V and –40 °C ≤ TA ≤ 125 °C, respectively. Typical parameters apply to 5 V or 3.3 V at 25 °C and are for design guidance only.

Table 20. AC Characteristics of the I²C SDA and SCL Pins

Symbol	Description	Standard Mode		Fast Mode		Units	Notes
		Min	Max	Min	Max		
F_{SCLI2C}	SCL clock frequency	0	100 [18]	0	400 [18]	kHz	
$t_{HDSTAI2C}$	Hold time (repeated) START condition. After this period, the first clock pulse is generated.	4.0	–	0.6	–	µs	
t_{LOWI2C}	LOW period of the SCL clock	4.7	–	1.3	–	µs	
$t_{HIGHI2C}$	HIGH period of the SCL clock	4.0	–	0.6	–	µs	
$t_{SUSTAI2C}$	Setup time for a repeated START condition	4.7	–	0.6	–	µs	
$t_{HDDATI2C}$	Data hold time	0	–	0	–	µs	
$t_{SUDATI2C}$	Data setup time	250	–	100 [19]	–	ns	
$t_{SUSTOI2C}$	Setup time for STOP condition	4.0	–	0.6	–	µs	
t_{BUFI2C}	Bus free time between a STOP and START condition	4.7	–	1.3	–	µs	
t_{SPI2C}	Pulse width of spikes are suppressed by the input filter.	–	–	0	50	ns	

Figure 8. Definition for Timing for Fast/Standard Mode on the I²C Bus

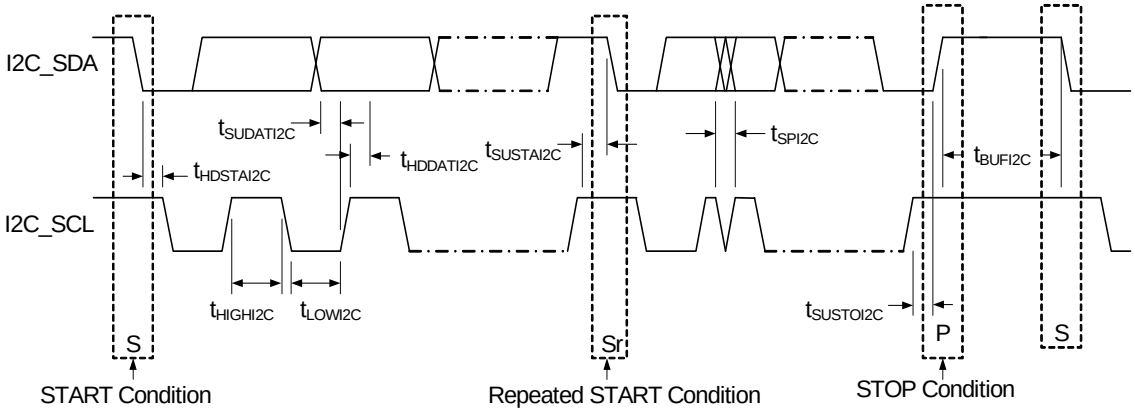

Notes

18. F_{SCLI2C} is derived from SysClk of the PSoC. This specification assumes that SysClk is operating at 24 MHz, nominal. If SysClk is at a lower frequency, then the F_{SCLI2C} specification adjusts accordingly
19. A Fast-Mode I²C-bus device can be used in a Standard-Mode I²C-bus system, but the requirement $t_{SUDATI2C}$ ≥ 250 ns must then be met. This is automatically the case if the device does not stretch the LOW period of the SCL signal. If such device does stretch the LOW period of the SCL signal, it must output the next data bit to the SDA line t_{rmax} + $t_{SUDATI2C}$ = 1000 + 250 = 1250 ns (according to the Standard-Mode I²C-bus specification) before the SCL line is released.

Development Tool Selection

This section presents the development tools available for the CY8C21x12 family.

Software

PSoC Designer

At the core of the PSoC development software suite is PSoC Designer. Utilized by thousands of PSoC developers, this robust software has been facilitating PSoC designs for years. PSoC Designer is available free of charge at http://www.cypress.com. PSoC Designer comes with a free C compiler.

PSoC Programmer

Flexible enough to be used on the bench in development, yet suitable for factory programming, PSoC Programmer works either as a standalone programming application or it can operate directly from PSoC Designer. PSoC Programmer software is compatible with both PSoC ICE-Cube in-circuit emulator and PSoC MiniProg. PSoC programmer is available free of charge at http://www.cypress.com.

Development Kits

All development kits can be purchased from the Cypress Online Store. The online store also has the most up-to-date information on kit contents, descriptions, and availability.

CY3215-DK Basic Development Kit

The CY3215-DK is for prototyping and development with PSoC Designer. This kit supports in-circuit emulation, and the software interface allows you to run, halt, and single step the processor, and view the contents of specific memory locations. Advanced emulation features are also supported through PSoC Designer. The kit includes:

- ICE-Cube unit
- 28-pin PDIP emulation pod for CY8C29466-24PXI
- Two 28-pin CY8C29466-24PXI PDIP PSoC device samples
- PSoC designer software CD
- ISSP cable
- MiniEval socket programming and evaluation board
- Backward compatibility cable (for connecting to legacy pods)
- Universal 110/220 power supply (12 V)
- European plug adapter
- USB 2.0 cable
- Getting Started guide
- Development kit registration form

CY3280-BK1

The CY3280-BK1 Universal CapSense Control Kit is designed for easy prototyping and debug of CapSense designs with pre-defined control circuitry and plug-in hardware. The kit comes with a control boards for CY8C20x34 and CY8C21x34 devices as well as a breadboard module and a button(5)/slider module.

The CY8C21x34 on-chip debugger device that is part of this kit is capable of emulating CY8C21x12 devices as well. Therefore, this kit can be used to evaluate and develop projects for CY8C21x12 devices.

Evaluation Tools

All evaluation tools can be purchased from the Cypress Online Store.

CY3210-PSoCEval1

The CY3210-PSoCEval1 kit features an evaluation board and the MiniProg1 programming unit. The evaluation board includes an LCD module, potentiometer, LEDs, an RS-232 port, and plenty of breadboarding space to meet all of your evaluation needs. The kit includes:

- Evaluation board with LCD module
- MiniProg programming unit
- Two 28-pin CY8C29466-24PXI PDIP PSoC device samples
- PSoC Designer software CD
- Getting Started guide
- USB 2.0 cable

CY3210-21X34 Evaluation Pod (EvalPod)

The CY3210-21X34 PSoC EvalPods are pods that connect to the ICE in-circuit emulator (CY3215-DK kit) to allow debugging capability. They can also function as a standalone device without debugging capability. The EvalPod has a 28-pin DIP footprint on the bottom for easy connection to development kits or other hardware. The top of the EvalPod has prototyping headers for easy connection to the device's pins. CY3210-21X34 provides evaluation of the CY8C21x34 PSoC device family.

The CY8C21x34 on-chip debugger device that is part of this kit is capable of emulating CY8C21x12 devices as well. Therefore, this kit can be used to evaluate CY8C21x12 devices.

Device Programmers

All device programmers can be purchased from the Cypress Online Store.

CY3210-MiniProg1

The CY3210-MiniProg1 kit allows a user to program PSoC devices via the MiniProg1 programming unit. The MiniProg is a small, compact prototyping programmer that connects to the PC via a provided USB 2.0 cable. The kit includes:

- MiniProg programming unit
- MiniEval socket programming and evaluation board
- 28-pin CY8C29466-24PXI PDIP PSoC device sample
- PSoC Designer software CD
- Getting Started guide
- USB 2.0 cable

Accessories (Emulation and Programming)

Table 21. Emulation and Programming Accessories

Part Number	Pin Package	Pod Kit [20]	Foot Kit [21]	Adapter [22]
CY8C21312-12PVXE	20-pin SSOP	CY3250-21X34	CY3250-20SSOP-FK	Adapters are available at http://www.emulation.com.
CY8C21512-12PVXE	28-pin SSOP	CY3250-21X34	CY3250-28SSOP-FK	

Notes
20. Pod kit contains an emulation pod, a flex-cable (connects the pod to the ICE), two feet, and device samples.
21. Foot kit includes surface mount feet that can be soldered to the target PCB.
22. Programming adapter converts non-DIP package to DIP footprint. Specific details and ordering information for each of the adapters are available at http://www.emulation.com.

Ordering Information

The following table lists the CY8C21x12 PSoC device's key package features and ordering codes.

Table 22. PSoC Device Key Features and Ordering Information

Package	Ordering Code	Flash (Bytes)	SRAM (Bytes)	Temperature Range	Limited Digital Blocks	CapSense Blocks	Digital I/O Pins	Analog Inputs	Analog Outputs	XRES Pin
20-pin (210-Mil) SSOP	CY8C21312-12PVXE	8 K	512	–40 °C to +125 °C	1	1	16	16	0	Yes
20-pin (210-Mil) SSOP (Tape and Reel)	CY8C21312-12PVXET	8 K	512	–40 °C to +125 °C	1	1	16	16	0	Yes
28-pin (210-Mil) SSOP	CY8C21512-12PVXE	8 K	512	–40 °C to +125 °C	1	1	24	24	0	Yes
28-pin (210-Mil) SSOP (Tape and Reel)	CY8C21512-12PVXET	8 K	512	–40 °C to +125 °C	1	1	24	24	0	Yes

Ordering Code Definitions

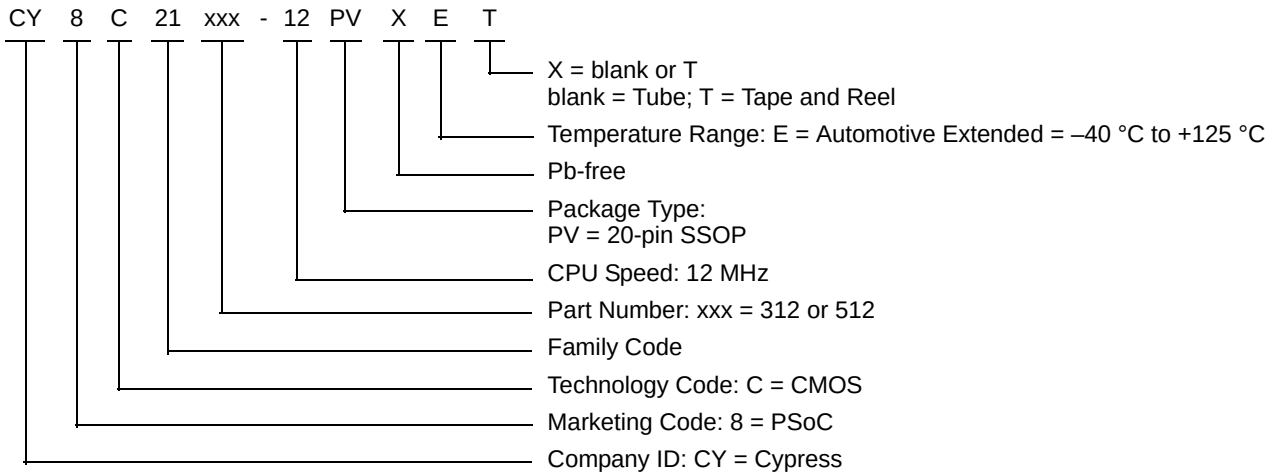

Packaging Information

This section illustrates the packaging specifications for the CY8C21x12 PSoC device, along with the thermal impedances for each package.

Important Note Emulation tools may require a larger area on the target PCB than the chip's footprint. For a detailed description of the emulation tools' dimensions, refer to the emulator pod drawings at http://www.cypress.com.

Packaging Dimensions

Figure 9. 20-pin SSOP (210 Mils) O20.21 Package Outline, 51-85077

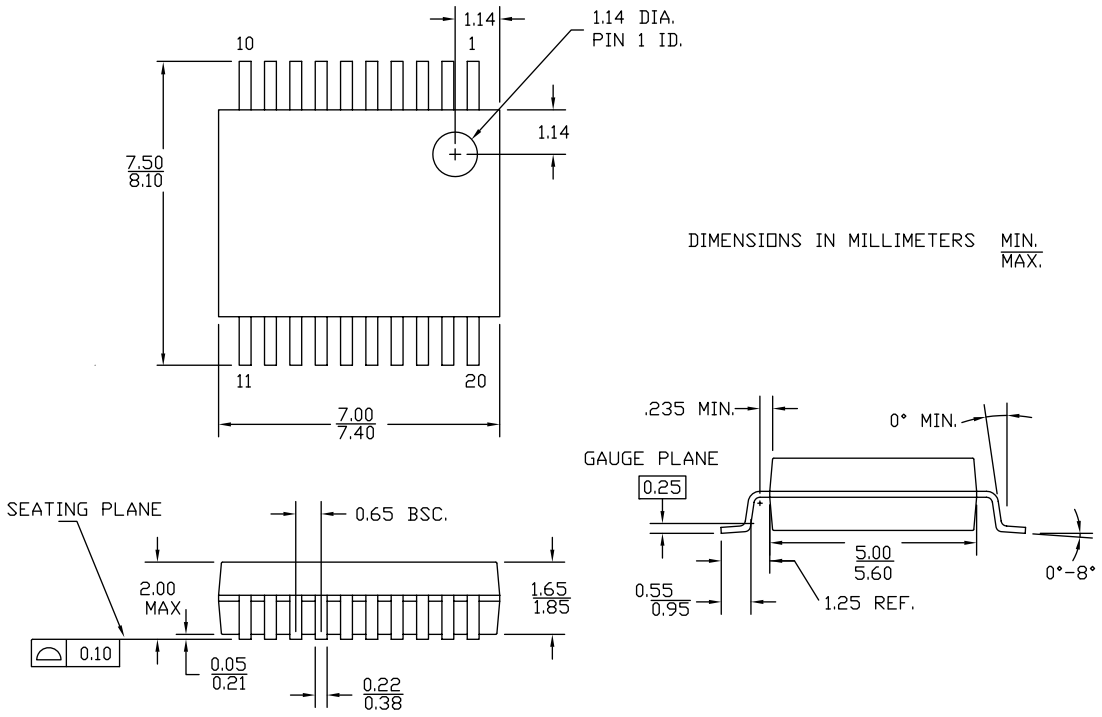

51-85077 *E

Packaging Information *(continued)*

Figure 10. 28-pin SSOP (210 Mils) O28.21 Package Outline, 51-85079

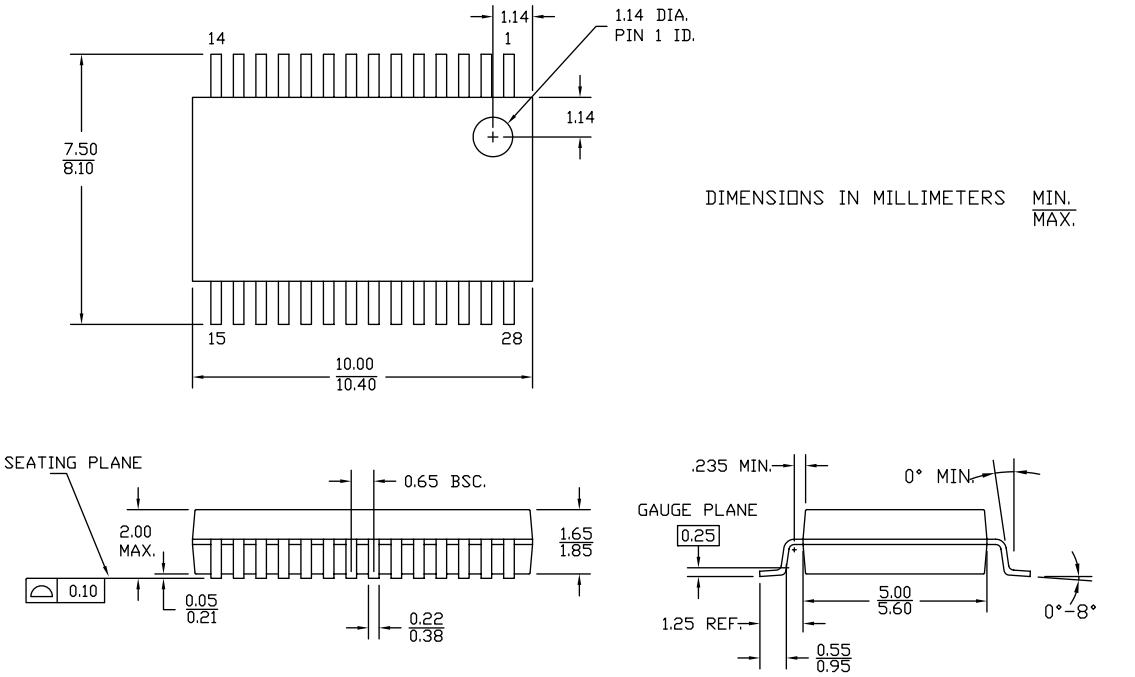

51-85079 *E

Packaging Information *(continued)*

Tape and Reel Information

Figure 11. 20-pin SSOP (209 Mils) – Advantek Carrier Tape Drawing, 51-51101

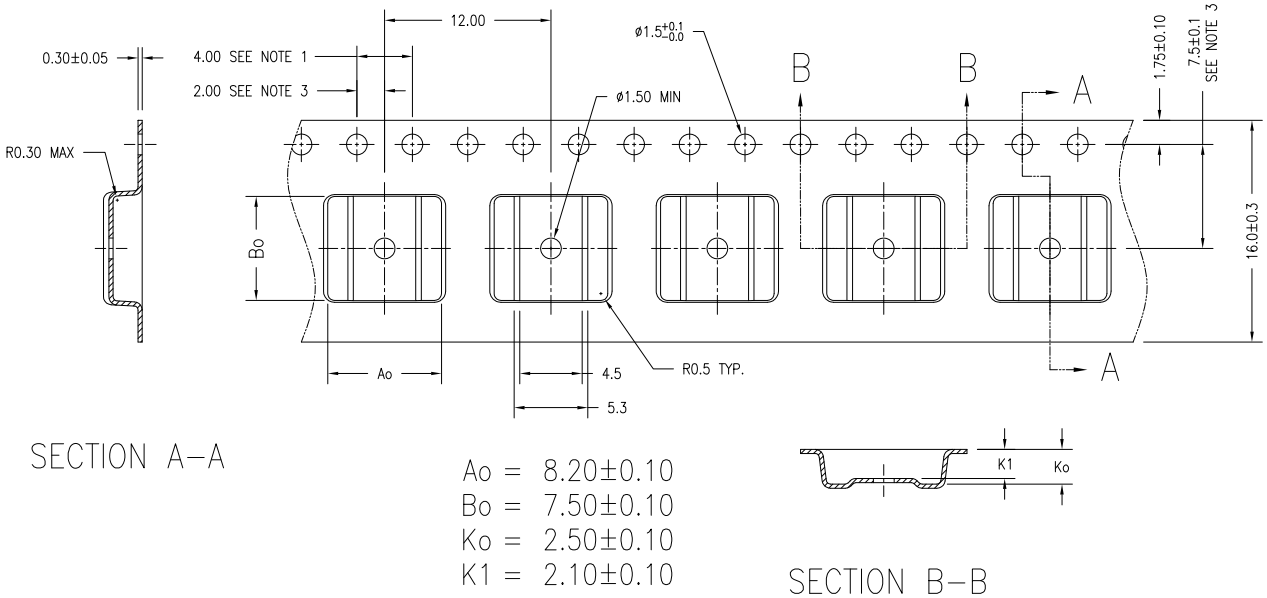

NOTES:
1. 10 SPROCKET HOLE PITCH CUMULATIVE TOLERANCE ±0.2
2. CAMBER IN COMPLIANCE WITH EIA 481
3. POCKET POSITION RELATIVE TO SPROCKET HOLE MEASURED AS TRUE POSITION OF POCKET, NOT POCKET HOLE

51-51101 *C

Packaging Information *(continued)*

Figure 12. 28-pin SSOP (209 Mils) (C-Pak) Carrier Tape Drawing, 51-51100

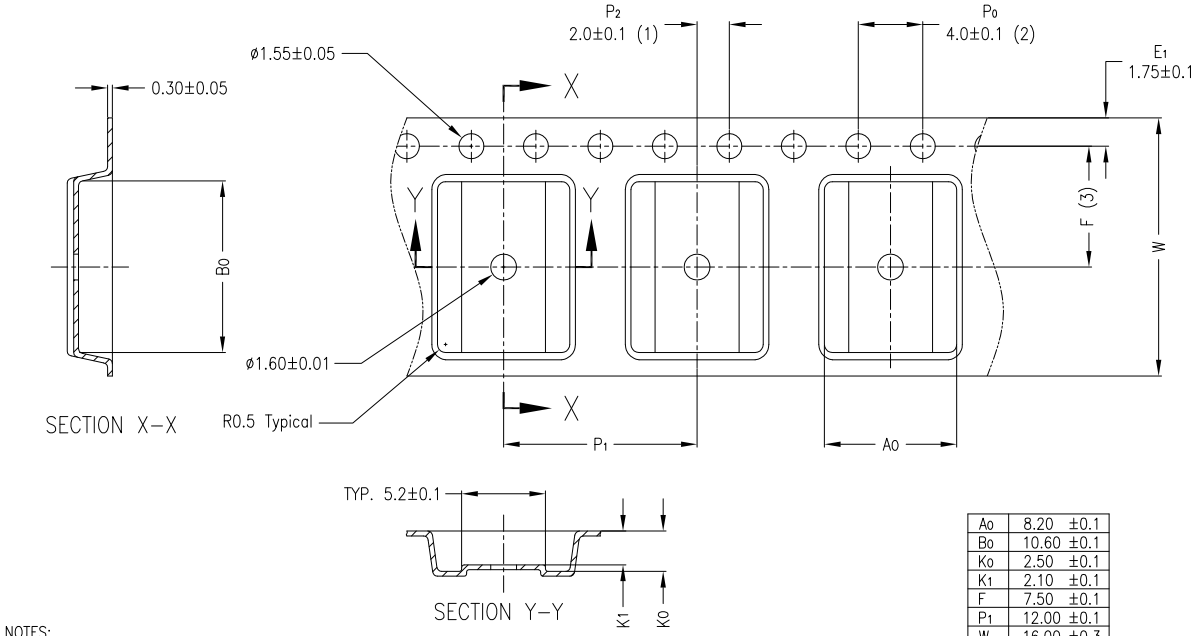

A0	8.20 ±0.1
B0	10.60 ±0.1
K0	2.50 ±0.1
K1	2.10 ±0.1
F	7.50 ±0.1
P1	12.00 ±0.1
W	16.00 ±0.3

NOTES:
(1) Measured from centerline of sprocket hole to centerline of pocket.
(2) Cumulative tolerance of 10 sprocket holes is ± 0.10.
(3) Measured from centerline of sprocket hole to centerline of pocket
4 Material: Conductive Polystyrene
5 Camber not to exceed 1mm in 100mm
6 Supplier P/N: SSOP28–3 CL3 22B3 Lxx W16

51-51100 *C

Table 23. Tape and Reel Specifications

Package	Cover Tape Width (mm)	Hub Size (inches)	Minimum Leading Empty Pockets	Minimum Trailing Empty Pockets	Standard Full Reel Quantity
20-pin SSOP	13.3	4	42	25	2000
28-pin SSOP	13.3	7	42	25	1000

Thermal Impedances

Table 24. Thermal Impedances per Package

Package	Typical θ_{JA} [23]	Typical θ_{JC}
20-pin SSOP	117 °C/W	41 °C/W
28-pin SSOP	96 °C/W	39 °C/W

Solder Reflow Specifications

Table 25 shows the solder reflow temperature limits that must not be exceeded.

Table 25. Solder Reflow Specifications

Package	Maximum Peak Temperature (T_C)	Maximum Time above T_C – 5 °C
20-pin SSOP	260 °C	30 seconds
28-pin SSOP	260 °C	30 seconds

Note
23. $T_J = T_A$ + Power x θ_{JA}

Reference Information

Reference Documents

CY8CPLC20, CY8CLED16P01, CY8C29x66, CY8C27x43, CY8C24x94, CY8C24x23, CY8C24x23A, CY8C22x13, CY8C21x34, CY8C21x23, CY7C64215, CY7C603xx, CY8CNP1xx, and CYWUSB6953 PSoC® Programmable System-on-Chip Technical Reference Manual (TRM) (001-14463)

Design Aids – Reading and Writing PSoC® Flash – AN2015 (001-40459)

Acronyms

Table 26 lists the acronyms that are used in this document.

Table 26. Acronyms Used in this Datasheet

Acronym	Description
AC	alternating current
AEC	automotive electronics council
ADC	analog-to-digital converter
API	application programming interface
CPU	central processing unit
CRC	cyclic redundancy check
DAC	digital-to-analog converter
DC	direct current or duty cycle
DIP	dual in-line package
EEPROM	electrically erasable programmable read only memory
ESD	electrostatic discharge
EXTCLK	external clock
GPIO	general-purpose input/output
GUI	graphical user interface
I^2C	inter-integrated circuit
ICE	in-circuit emulator
IDE	integrated development environment
ILO	internal low-speed oscillator
IMO	internal main oscillator
I/O	input/output
ISSP	in-system serial programming
LCD	liquid crystal display
LED	light-emitting diode
LVD	low voltage detect
MCU	microcontroller unit
MIPS	million instructions per second
PCB	printed circuit board
PDIP	plastic dual in-line package
PLL	phase-locked loop
POR	power-on reset
PPOR	precision power-on reset
PSoC®	programmable system-on-chip
PWM	pulse width modulator
SCL / SCLK	serial clock
SDA	serial data
SLIMO	slow internal main oscillator
SPI	serial peripheral interface
SRAM	static random access memory

Table 26. Acronyms Used in this Datasheet *(continued)*

Acronym	Description
SSOP	shrink small-outline package
UART	universal asynchronous receiver / transmitter
USB	universal serial bus
WDT	watchdog timer
XRES	external reset

Document Conventions

Units of Measure

The following table lists the units of measure that are used in this document.

Table 27. Units of Measure

Symbol	Unit of Measure
°C	degree Celsius
dB	decibel
KB	kilobyte
kbit	kilobit
kHz	kilohertz
kΩ	kilohm
MHz	megahertz
µA	microampere
µs	microsecond
µV	microvolt
mA	milliampere
ms	millisecond
mV	millivolt
nA	nanoampere
ns	nanosecond
Ω	ohm
%	percent
pF	picofarad
ps	picosecond
V	volt
W	watt

Numeric Conventions

Hexadecimal numbers are represented with all letters in uppercase with an appended lowercase ‘h’ (for example, ‘14h’ or ‘3Ah’). Hexadecimal numbers may also be represented by a ‘0x’ prefix, the C coding convention. Binary numbers have an appended lowercase ‘b’ (for example, ‘01010100b’ or ‘01000011b’). Numbers not indicated by an ‘h’, ‘b’, or ‘0x’ are in decimal format.

Glossary

active high	1. A logic signal having its asserted state as the logic 1 state. 2. A logic signal having the logic 1 state as the higher voltage of the two states.
analog blocks	The basic programmable opamp circuits. These are SC (switched capacitor) and CT (continuous time) blocks. These blocks can be interconnected to provide ADCs, DACs, multi-pole filters, gain stages, and much more.
analog-to-digital converter (ADC)	A device that changes an analog signal to a digital signal of corresponding magnitude. Typically, an ADC converts a voltage to a digital number. The digital-to-analog converter (DAC) performs the reverse operation.
Application programming interface (API)	A series of software routines that comprise an interface between a computer application and lower level services and functions (for example, user modules and libraries). APIs serve as building blocks for programmers that create software applications.
asynchronous	A signal whose data is acknowledged or acted upon immediately, irrespective of any clock signal.
bandgap reference	A stable voltage reference design that matches the positive temperature coefficient of VT with the negative temperature coefficient of VBE, to produce a zero temperature coefficient (ideally) reference.
bandwidth	1. The frequency range of a message or information processing system measured in hertz. 2. The width of the spectral region over which an amplifier (or absorber) has substantial gain (or loss); it is sometimes represented more specifically as, for example, full width at half maximum.
bias	1. A systematic deviation of a value from a reference value. 2. The amount by which the average of a set of values departs from a reference value. 3. The electrical, mechanical, magnetic, or other force (field) applied to a device to establish a reference level to operate the device.
block	1. A functional unit that performs a single function, such as an oscillator. 2. A functional unit that may be configured to perform one of several functions, such as a digital PSoC block or an analog PSoC block.
buffer	1. A storage area for data that is used to compensate for a speed difference, when transferring data from one device to another. Usually refers to an area reserved for I/O operations, into which data is read, or from which data is written. 2. A portion of memory set aside to store data, often before it is sent to an external device or as it is received from an external device. 3. An amplifier used to lower the output impedance of a system.
bus	1. A named connection of nets. Bundling nets together in a bus makes it easier to route nets with similar routing patterns. 2. A set of signals performing a common function and carrying similar data. Typically represented using vector notation; for example, address[7:0]. 3. One or more conductors that serve as a common connection for a group of related devices.
clock	The device that generates a periodic signal with a fixed frequency and duty cycle. A clock is sometimes used to synchronize different logic blocks.
comparator	An electronic circuit that produces an output voltage or current whenever two input levels simultaneously satisfy predetermined amplitude requirements.
compiler	A program that translates a high level language, such as C, into machine language.
configuration space	In PSoC devices, the register space accessed when the XIO bit, in the CPU_F register, is set to ‘1’.

crystal oscillator	An oscillator in which the frequency is controlled by a piezoelectric crystal. Typically a piezoelectric crystal is less sensitive to ambient temperature than other circuit components.
cyclic redundancy check (CRC)	A calculation used to detect errors in data communications, typically performed using a linear feedback shift register. Similar calculations may be used for a variety of other purposes such as data compression.
data bus	A bi-directional set of signals used by a computer to convey information from a memory location to the central processing unit and vice versa. More generally, a set of signals used to convey data between digital functions.
debugger	A hardware and software system that allows you to analyze the operation of the system under development. A debugger usually allows the developer to step through the firmware one step at a time, set break points, and analyze memory.
dead band	A period of time when neither of two or more signals are in their active state or in transition.
digital blocks	The 8-bit logic blocks that can act as a counter, timer, serial receiver, serial transmitter, CRC generator, pseudo-random number generator, or SPI.
digital-to-analog converter (DAC)	A device that changes a digital signal to an analog signal of corresponding magnitude. The analog-to-digital converter (ADC) performs the reverse operation.
duty cycle	The relationship of a clock period high time to its low time, expressed as a percent.
emulator	Duplicates (provides an emulation of) the functions of one system with a different system, so that the second system appears to behave like the first system.
external reset (XRES)	An active high signal that is driven into the PSoC device. It causes all operation of the CPU and blocks to stop and return to a pre-defined state.
flash	An electrically programmable and erasable, non-volatile technology that provides you the programmability and data storage of EPROMs, plus in-system erasability. Non-volatile means that the data is retained when power is off.
flash block	The smallest amount of flash ROM space that may be programmed at one time and the smallest amount of flash space that may be protected.
frequency	The number of cycles or events per unit of time, for a periodic function.
gain	The ratio of output current, voltage, or power to input current, voltage, or power, respectively. Gain is usually expressed in dB.
I^2C	A two-wire serial computer bus by Philips Semiconductors (now NXP Semiconductors). It is used to connect low-speed peripherals in an embedded system. The original system was created in the early 1980s as a battery control interface, but it was later used as a simple internal bus system for building control electronics. I2C uses only two bi-directional pins, clock and data, both running at the V_{DD} supply voltage and pulled high with resistors. The bus operates up to100 kbits/second in standard mode and 400 kbits/second in fast mode.
ICE	The in-circuit emulator that allows you to test the project in a hardware environment, while viewing the debugging device activity in a software environment (PSoC Designer).
input/output (I/O)	A device that introduces data into or extracts data from a system.
interrupt	A suspension of a process, such as the execution of a computer program, caused by an event external to that process, and performed in such a way that the process can be resumed.
interrupt service routine (ISR)	A block of code that normal code execution is diverted to when the CPU receives a hardware interrupt. Many interrupt sources may each exist with its own priority and individual ISR code block. Each ISR code block ends with the RETI instruction, returning the device to the point in the program where it left normal program execution.

jitter	1. A misplacement of the timing of a transition from its ideal position. A typical form of corruption that occurs on serial data streams. 2. The abrupt and unwanted variations of one or more signal characteristics, such as the interval between successive pulses, the amplitude of successive cycles, or the frequency or phase of successive cycles.
low voltage detect (LVD)	A circuit that senses V_{DD} and provides an interrupt to the system when V_{DD} falls below a selected threshold.
M8C	An 8-bit Harvard-architecture microprocessor. The microprocessor coordinates all activity inside a PSoC by interfacing to the flash, SRAM, and register space.
master device	A device that controls the timing for data exchanges between two devices. Or when devices are cascaded in width, the master device is the one that controls the timing for data exchanges between the cascaded devices and an external interface. The controlled device is called the *slave device*.
microcontroller	An integrated circuit chip that is designed primarily for control systems and products. In addition to a CPU, a microcontroller typically includes memory, timing circuits, and I/O circuitry. The reason for this is to permit the realization of a controller with a minimal quantity of chips, thus achieving maximal possible miniaturization. This in turn, reduces the volume and the cost of the controller. The microcontroller is normally not used for general-purpose computation as is a microprocessor.
mixed-signal	The reference to a circuit containing both analog and digital techniques and components.
modulator	A device that imposes a signal on a carrier.
noise	1. A disturbance that affects a signal and that may distort the information carried by the signal. 2. The random variations of one or more characteristics of any entity such as voltage, current, or data.
oscillator	A circuit that may be crystal controlled and is used to generate a clock frequency.
parity	A technique for testing transmitted data. Typically, a binary digit is added to the data to make the sum of all the digits of the binary data either always even (even parity) or always odd (odd parity).
phase-locked loop (PLL)	An electronic circuit that controls an *oscillator* so that it maintains a constant phase angle relative to a reference signal.
pinouts	The pin number assignment: the relation between the logical inputs and outputs of the PSoC device and their physical counterparts in the printed circuit board (PCB) package. Pinouts involve pin numbers as a link between schematic and PCB design (both being computer generated files) and may also involve pin names.
port	A group of pins, usually eight.
power-on reset (POR)	A circuit that forces the PSoC device to reset when the voltage is below a pre-set level. This is one type of hardware reset.
PSoC®	Cypress Semiconductor's PSoC® is a registered trademark and Programmable System-on-Chip™ is a trademark of Cypress.
PSoC Designer™	The software for Cypress' Programmable System-on-Chip technology.
pulse width modulator (PWM)	An output in the form of duty cycle which varies as a function of the applied value.
RAM	An acronym for random access memory. A data-storage device from which data can be read out and new data can be written in.
register	A storage device with a specific capacity, such as a bit or byte.

reset	A means of bringing a system back to a known state. See hardware reset and software reset.
ROM	An acronym for read only memory. A data-storage device from which data can be read out, but new data cannot be written in.
serial	1. Pertaining to a process in which all events occur one after the other. 2. Pertaining to the sequential or consecutive occurrence of two or more related activities in a single device or channel.
settling time	The time it takes for an output signal or value to stabilize after the input has changed from one value to another.
shift register	A memory storage device that sequentially shifts a word either left or right to output a stream of serial data.
slave device	A device that allows another device to control the timing for data exchanges between two devices. Or when devices are cascaded in width, the slave device is the one that allows another device to control the timing of data exchanges between the cascaded devices and an external interface. The controlling device is called the master device.
SRAM	An acronym for static random access memory. A memory device where you can store and retrieve data at a high rate of speed. The term static is used because, after a value is loaded into an SRAM cell, it remains unchanged until it is explicitly altered or until power is removed from the device.
SROM	An acronym for supervisory read only memory. The SROM holds code that is used to boot the device, calibrate circuitry, and perform flash operations. The functions of the SROM may be accessed in normal user code, operating from flash.
stop bit	A signal following a character or block that prepares the receiving device to receive the next character or block.
synchronous	1. A signal whose data is not acknowledged or acted upon until the next active edge of a clock signal. 2. A system whose operation is synchronized by a clock signal.
tristate	A function whose output can adopt three states: 0, 1, and Z (high-impedance). The function does not drive any value in the Z state and, in many respects, may be considered to be disconnected from the rest of the circuit, allowing another output to drive the same net.
UART	A UART or universal asynchronous receiver-transmitter translates between parallel bits of data and serial bits.
user modules	Pre-built, pre-tested hardware/firmware peripheral functions that take care of managing and configuring the lower level analog and digital PSoC blocks. User modules also provide high level *API (Application Programming Interface)* for the peripheral function.
user space	The bank 0 space of the register map. The registers in this bank are more likely to be modified during normal program execution and not just during initialization. Registers in bank 1 are most likely to be modified only during the initialization phase of the program.
V_{DD}	A name for a power net meaning "voltage drain”. The most positive power supply signal. Usually 5 V or 3.3 V.
V_{SS}	A name for a power net meaning "voltage source." The most negative power supply signal.
watchdog timer	A timer that must be serviced periodically. If it is not serviced, the CPU resets after a specified period of time.

Document History Page

Document Title: CY8C21312/CY8C21512, Automotive Extended PSoC® Programmable System-on-Chip™ Document Number: 001-81890				
Rev.	**ECN No.**	**Orig. of Change**	**Submission Date**	**Description of Change**
**	3705964	MASJ	08/09/2012	New data sheet.
*A	4008934	KAUL	05/23/2013	Updated Features. Updated PSoC Functional Overview (Updated The Digital System). Updated Electrical Specifications (Updated DC Electrical Characteristics (Updated DC Chip-Level Specifications (Updated Table 8), updated DC GPIO Specifications (Updated Table 9), updated DC Operational Amplifier Specifications, updated DC Analog Mux Bus Specifications, updated DC POR and LVD Specifications, updated DC Programming Specifications (Updated Table 13)), updated AC Electrical Characteristics (Updated AC Chip-Level Specifications (Updated Table 14), updated AC GPIO Specifications (Updated Table 15), updated AC Operational Amplifier Specifications, updated AC Digital Block Specifications (Updated Table 17), updated AC External Clock Specifications, updated AC Programming Specifications, updated AC I2C Specifications)). Updated Packaging Information: Updated Tape and Reel Information: spec 51-51101 – Changed revision from *B to *C.
*B	4265204	JICG	01/28/2014	Removed ‘CY3207ISSP In-System Serial Programmer (ISSP)’ section.

Sales, Solutions, and Legal Information

Worldwide Sales and Design Support

Cypress maintains a worldwide network of offices, solution centers, manufacturer's representatives, and distributors. To find the office closest to you, visit us at Cypress Locations.

Products

Automotive	cypress.com/go/automotive
Clocks & Buffers	cypress.com/go/clocks
Interface	cypress.com/go/interface
Lighting & Power Control	cypress.com/go/powerpsoc cypress.com/go/plc
Memory	cypress.com/go/memory
PSoC	cypress.com/go/psoc
Touch Sensing	cypress.com/go/touch
USB Controllers	cypress.com/go/USB
Wireless/RF	cypress.com/go/wireless

PSoC Solutions

psoc.cypress.com/solutions

PSoC 1 | PSoC 3 | PSoC 5

© Cypress Semiconductor Corporation, 2012-2014. The information contained herein is subject to change without notice. Cypress Semiconductor Corporation assumes no responsibility for the use of any circuitry other than circuitry embodied in a Cypress product. Nor does it convey or imply any license under patent or other rights. Cypress products are not warranted nor intended to be used for medical, life support, life saving, critical control or safety applications, unless pursuant to an express written agreement with Cypress. Furthermore, Cypress does not authorize its products for use as critical components in life-support systems where a malfunction or failure may reasonably be expected to result in significant injury to the user. The inclusion of Cypress products in life-support systems application implies that the manufacturer assumes all risk of such use and in doing so indemnifies Cypress against all charges.

Any Source Code (software and/or firmware) is owned by Cypress Semiconductor Corporation (Cypress) and is protected by and subject to worldwide patent protection (United States and foreign), United States copyright laws and international treaty provisions. Cypress hereby grants to licensee a personal, non-exclusive, non-transferable license to copy, use, modify, create derivative works of, and compile the Cypress Source Code and derivative works for the sole purpose of creating custom software and or firmware in support of licensee product to be used only in conjunction with a Cypress integrated circuit as specified in the applicable agreement. Any reproduction, modification, translation, compilation, or representation of this Source Code except as specified above is prohibited without the express written permission of Cypress.

Disclaimer: CYPRESS MAKES NO WARRANTY OF ANY KIND, EXPRESS OR IMPLIED, WITH REGARD TO THIS MATERIAL, INCLUDING, BUT NOT LIMITED TO, THE IMPLIED WARRANTIES OF MERCHANTABILITY AND FITNESS FOR A PARTICULAR PURPOSE. Cypress reserves the right to make changes without further notice to the materials described herein. Cypress does not assume any liability arising out of the application or use of any product or circuit described herein. Cypress does not authorize its products for use as critical components in life-support systems where a malfunction or failure may reasonably be expected to result in significant injury to the user. The inclusion of Cypress' product in a life-support systems application implies that the manufacturer assumes all risk of such use and in doing so indemnifies Cypress against all charges.

Use may be limited by and subject to the applicable Cypress software license agreement.

All products and company names mentioned in this document may be the trademarks of their respective holders.

Компания «ЭлектроПласт» предлагает заключение долгосрочных отношений при поставках импортных электронных компонентов на взаимовыгодных условиях!

Наши преимущества:

- Оперативные поставки широкого спектра электронных компонентов отечественного и импортного производства напрямую от производителей и с крупнейших мировых складов;
- Поставка более 17-ти миллионов наименований электронных компонентов;
- Поставка сложных, дефицитных, либо снятых с производства позиций;
- Оперативные сроки поставки под заказ (от 5 рабочих дней);
- Экспресс доставка в любую точку России;
- Техническая поддержка проекта, помощь в подборе аналогов, поставка прототипов;
- Система менеджмента качества сертифицирована по Международному стандарту ISO 9001;
- Лицензия ФСБ на осуществление работ с использованием сведений, составляющих государственную тайну;
- Поставка специализированных компонентов (Xilinx, Altera, Analog Devices, Intersil, Interpoint, Microsemi, Aeroflex, Peregrine, Syfer, Eurofarad, Texas Instrument, Miteq, Cobham, E2V, MA-COM, Hittite, Mini-Circuits,General Dynamics и др.);

Помимо этого, одним из направлений компании «ЭлектроПласт» является направление «Источники питания». Мы предлагаем Вам помощь Конструкторского отдела:

- Подбор оптимального решения, техническое обоснование при выборе компонента;
- Подбор аналогов;
- Консультации по применению компонента;
- Поставка образцов и прототипов;
- Техническая поддержка проекта;
- Защита от снятия компонента с производства.

Как с нами связаться

Телефон: 8 (812) 309 58 32 (многоканальный)
Факс: 8 (812) 320-02-42
Электронная почта: org@eplast1.ru
Адрес: 198099, г. Санкт-Петербург, ул. Калинина, дом 2, корпус 4, литера А.